TECHNICAL NOTES.

NATIONAL ADVISORY COMMITTEE FOR AERONAUTICS.

No. 74.

MUTUAL INFLUENCE OF WINGS AND PROPELLER.

By

L. Prandtl.

Extract from
The First Report of the Göttingen Aerodynamic Laboratory,
Chap. IV, Sec. 6.

December, 1921.

NATIONAL ADVISORY COMMITTEE FOR AERONAUTICS.

TECHNICAL NOTE NO. 74.

MUTUAL INFLUENCE OF WINGS AND PROPELLERS.*

By

L. Prandtl.

In the experiments, use was made of the arrangement shown in Fig. 1. The aerofoil had the wing section No. 436, with a span of 960 mm., and a chord of 160 mm. The propeller had a diameter of 265 mm., and was mounted on the end of an adjustable shaft, which in turn was mounted on a floating frame, and was driven, by means of a belt, by an electric motor located outside the air current. The parts located in the air current (namely, the frame with the propeller shaft bearings and the belt pulley) were provided with a streamlined shield. The length of the unsupported shaft from the propeller to the bearing was 1200 mm. In the experiments with the propeller behind the aerofoil, a correspondingly shorter shaft was employed. The mounting of the propeller on the floating frame made it possible to determine the propeller thrust. With this arrangement, it was not possible to incline the propeller axis in the direction corresponding to the change in the angle of attack of the wing. The propeller shaft remained constantly in the direction of the air current, while the aerofoil was inclined at various angles by turning it about the point D.

* Extract from the First Report of the Göttingen Aerodynamic Laboratory, Chap. IV, Sec. 6, pp. 112-118.

In all the experiments, a wind speed of about 20 m/s, and a propeller speed of about 7000 r.p.m. were constantly maintained. The tip speed of the propeller was consequently about 97 m/s, and its ratio to the wind speed 4.86 to 1.

The aerofoil and propeller were first tested separately (Tables 1 and 2) and hence without mutual influence.

Table 1.

Aerofoil (960 x 160 mm.) alone. (S = 0.153 sq.m.)

Angle of	C_L	C_D	C_M

Table 2.

Propeller (dia. 265 mm.) alone. 7000 r.p.m.

Impact pressure q(kg/m²)	
Thrust T (kg.)	

The following cases were then tried:

1. Propeller in front of aerofoil -

   a) Propeller axis below aerofoil,
   b) " " above "

2. Propeller behind aerofoil -

   a) Propeller axis below aerofoil,
   b) " " coincident with chord ($\alpha = 0^\circ$),
   c) " " above aerofoil.

The lift, drag and moment of the aerofoil were measured at various angles of attack. The propeller thrust was also measured. The measurements were made with the propeller shaft at different distances from the aerofoil. They are designated by the

distance a of the propeller axis from the chord, with $\alpha = 0^{\circ}$. The distance d between the propeller and the aerofoil was measured in case No. 1 from the rear end of the propeller hub to the leading edge of the aerofoil, and in case No. 2 from the trailing edge of the aerofoil to the front end of the propeller hub. This distance averaged 50 mm., but varied in the different experiments. The exact distances are given in the corresponding tables. In the graphical representation of the results, the polar curve for the case when the propeller has no effect ($\alpha = \infty$) is always given as a dashed line so as to have a better comparison. The propeller thrust T is expressed by the coefficient C_T and is plotted from the origin toward the left as a function of the lift. C_T is defined by

$$T = C_T S q$$

in which S = surface area of aerofoil. From this equation the propeller-thrust coefficient C_T is obtained in a manner analogous to that for finding the drag coefficient C_D. This is done in order to obtain the direct comparison of C_T and C_D. On the diagrams the unit of measurement for C_T is twice as large as for C_D and the scale for C_T is reduced, beginning with $C_T = 0.15$. The corresponding thrust coefficient C_T of the propeller alone is likewise always traced with dashes. The propeller thrust was taken quite large with reference to the drag of the aerofoil, in order to accentuate the effect. That such was the case is evident from the following estimation. If we assume that $\alpha = 6^{\circ}$ (Compare the dashed polar curve in Fig. 3) and that the structur-

al drag of the airplane equals the wing drag, we obtain a total drag corresponding to a drag coefficient $C_D = 0.10$. On the other hand, the average propeller thrust is $C_T = 0.18$, hence considerably greater than the drag, so that the existing relations correspond to steep climbing flight.

In judging the results, it is well to distinguish two kinds of influences, one due to variations in velocity, and the other due to variations in direction of the air current. The propeller is affected mainly by variations in the inflow velocity due to the wing. The wing is also subjected to slight changes in the direction of the air flow, which noticeably affect the drag. This is especially apparent when the aerofoil is outside the slip stream. Taking, for example, the arrangement shown in Fig. 2, it is seen that an ascending air current is developed, which can noticeably affect the drag, even though it acts on only a portion of the aerofoil. If the propeller is in front of and its axis lies below the aerofoil (Fig. 3, Tables 3-5), the drag is greater than in the undisturbed air current. At small distances from the propeller axis, where the aerofoil divides the slip stream, the drag increase is due to the greater air speed. If the distance a is increased so much that the aerofoil lies outside the slip stream, the drag will be considerably increased by the descending air current. The air velocity is less close to the lower side of the aerofoil than at a greater distance and decreases as the lift increases. The propeller, working on the lower side, develops a greater thrust, due to the reduced inflow

velocity. In the case under consideration, the thrust is greater than for the propeller alone and increases with increasing angle of attack. If the propeller axis is located on the upper side, the conditions are reversed (Fig. 4, Tables 6-9). Here the propeller works in a swifter air current and consequently develops less thrust; just so much less, in fact, as the lift of the aerofoil is greater. Only when the axis of the propeller is very close to the aerofoil ($a = 28$ mm.), is the thrust increased. Here the propeller works in a current with a slower mean velocity, mainly because it lies partly below the aerofoil, where the drag is greater. In the other cases the drag is diminished, in comparison with the undisturbed aerofoil, as a result of the ascending air current generated by the propeller (Fig. 2).

With the propeller behind the aerofoil (Figs. 5 and 6, Tables 10-14), the case was tried in which the propeller axis lay in the chord of the aerofoil, with $\alpha = 0$. Here the propeller disk lay partly in the wake of the aerofoil. Since the air velocity was less in this vicinity, the mean velocity of the propeller inflow was less than the velocity of the undisturbed air current and the propeller thrust was correspondingly greater. Since the size of the wake is closely related to the drag of the aerofoil, it is evident that the propeller thrust depends on the aerofoil drag, especially with large positive and negative angles of attack. The influence of the propeller on the aerofoil is here similar to what it is with the propeller in front of the aerofoil. The variations

in the thrust and polar curves can be explained in like manner, when the propeller axis is moved toward either the upper or lower side of the aerofoil. There was a marked decrease in drag in the experiment when the propeller axis was the farthest (a = 191 mm.) above the aerofoil. This was due to the ascending air current at that place. The variations in the aerofoil moment (about its leading edge), due to the influence of the propeller, were very small in all the cases, as shown by the moment curves.

Translated by the National Advisory Committee for Aeronautics.

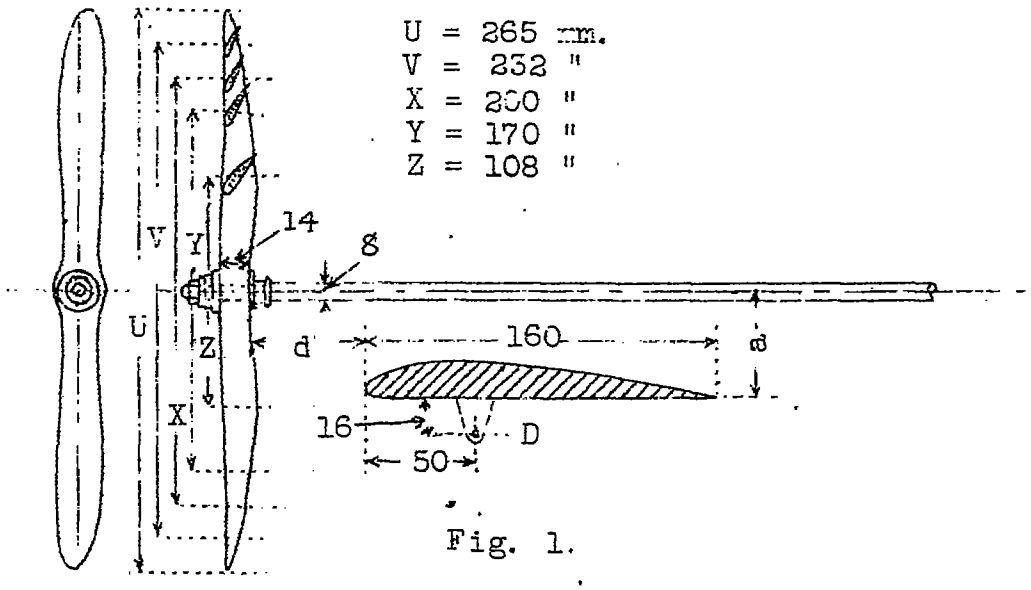

Fig. 1.

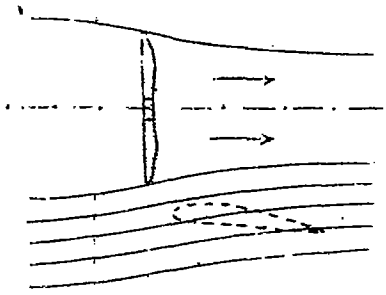

Fig. 2

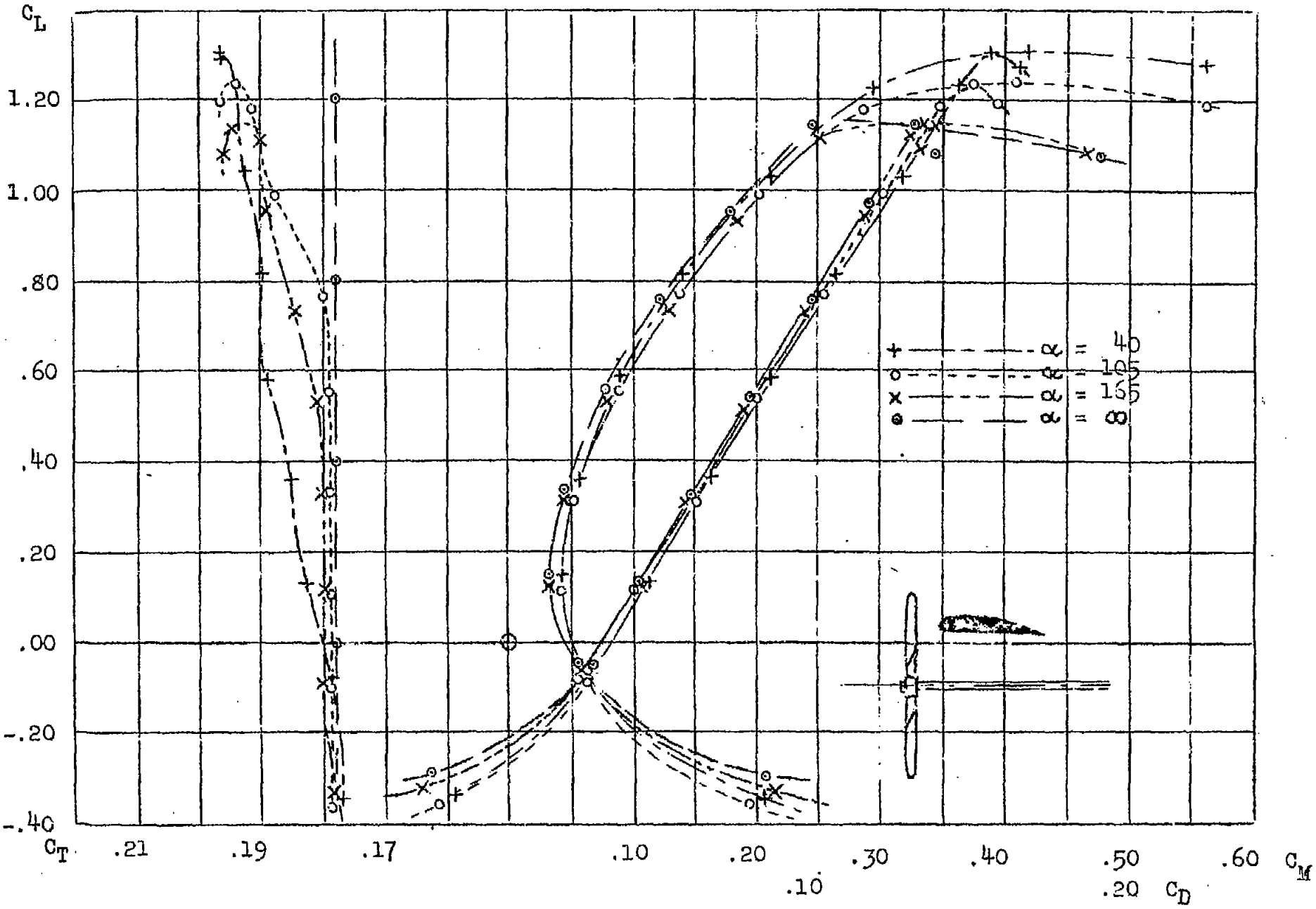
C_L
1.20
1.00
.80
.60
.40
.20
.00
-.20
-.40
C_T
.21
.19
.17
.10
.20
.30
.40
.50
.60
C_M
.10
.20
C_D
+ α = 40
o α = 105
x α = 165
⊗ α = ∞

Fig. 3 - Case 1a

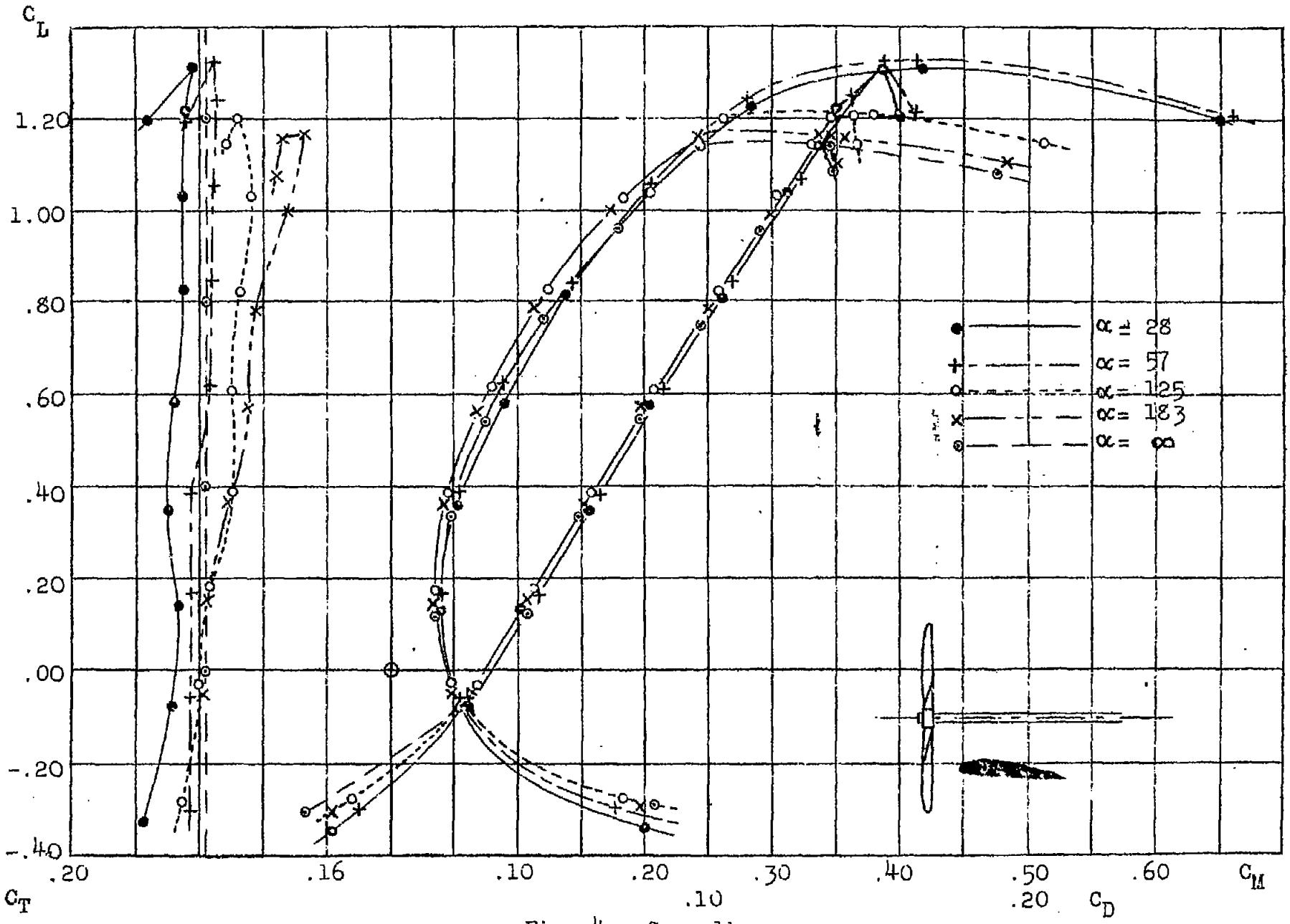
C_L
1.20
1.00
.80
.60
.40
.20
.00
-.20
-.40
.20
.16
.10
.20
.30
.40
.50
.60
C_M
C_T
.10
.20
C_D
α = 28
α = 57
α = 125
α = 183
α = ∞

Fig. 4. Case 1b.

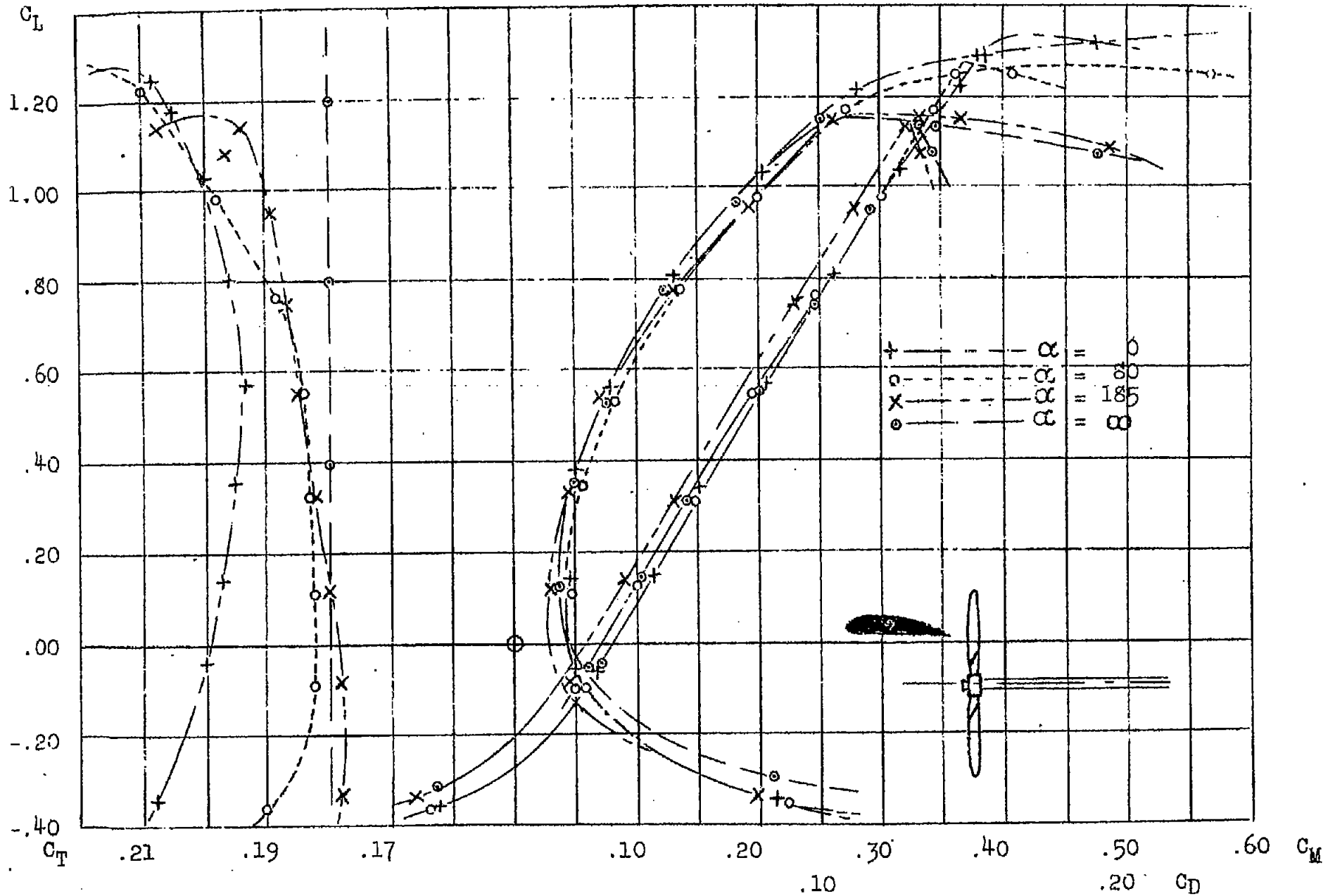

Fig. 5 Cases 2a and 2b.

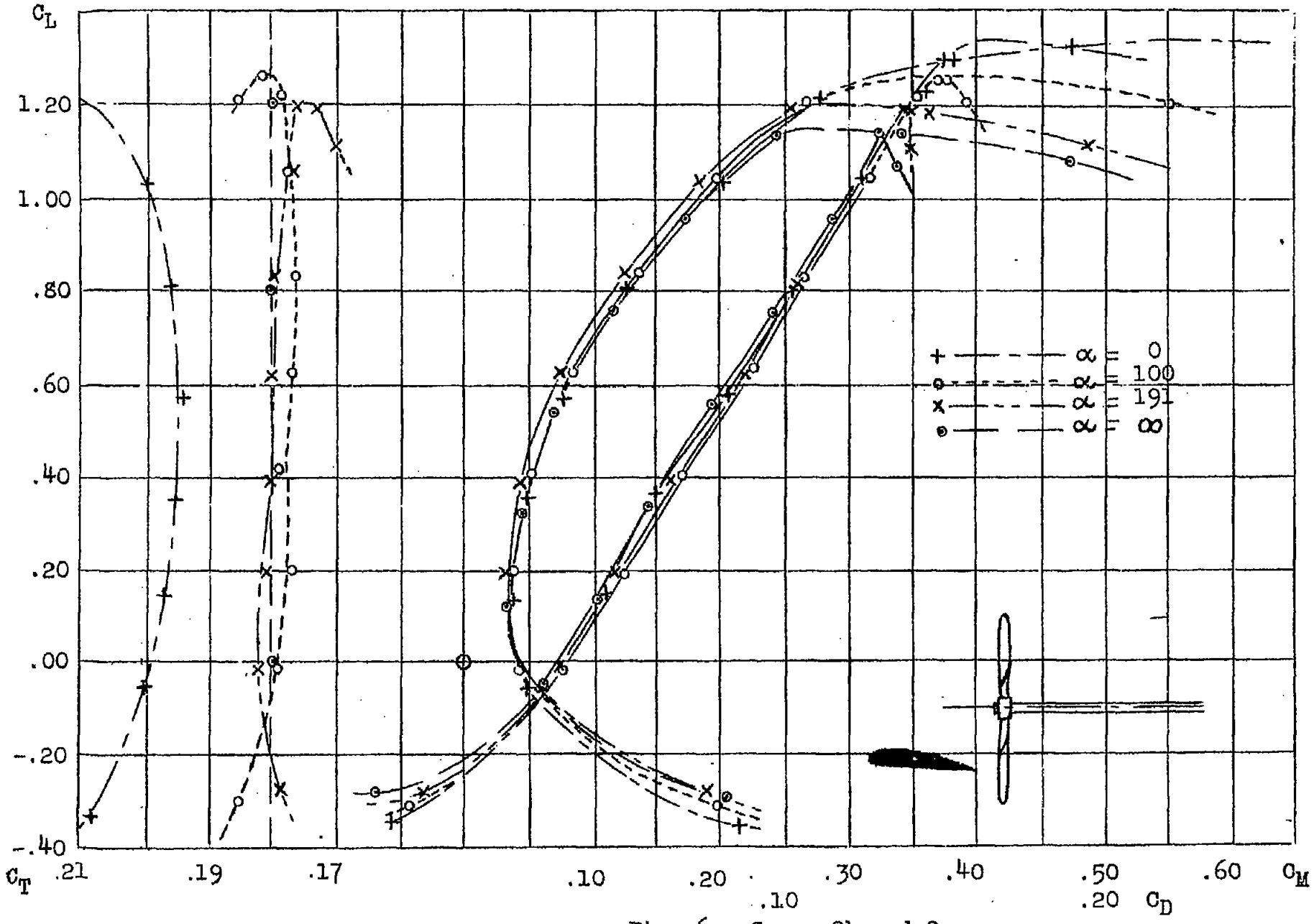

Fig. 6. Cases 2b and 2c.