TECHNICAL NOTES.

NATIONAL ADVISORY COMMITTEE FOR AERONAUTICS.

No. 76

A MECHANICAL DEVICE FOR ILLUSTRATING AIRPLANE STABILITY.

By

F. E. Norton,
Langley Memorial Aeronautical Laboratory,
National Advisory Committee for Aeronautics,
Langley Field, Va.

December, 1921.

NATIONAL ADVISORY COMMITTEE FOR AERONAUTICS.

TECHNICAL NOTE NO. 76.

A MECHANICAL DEVICE FOR ILLUSTRATING AIRPLANE STABILITY.

By

F. H. Norton.

Summary. An instrument is described which will illustrate completely in a qualitative sense the longitudinal stability characteristics of an airplane. The instrument is primarily of use for the lecture room, but it is hoped that ultimately it will be possible to obtain quantitative results from it.

Introduction. It is a very simple matter to construct a piece of apparatus which will show dynamic stability or damped oscillations - for example, a pendulum. A simple device which can be altered to give any degree of stable or unstable motion has long been desired, and as far as it is known, the instrument described below is the only simple method for accomplishing this.

At first it was expected that only the degree of damping of an oscillation would be illustrated, but as the instrument was more carefully studied it became evident that nearly every property of the flying airplane was represented with astonishing exactness. This is confirmed by the fact that the equations of motion work out in almost identical form with those of Bryan and Bairstow for the airplane.

A description of this instrument is given here because: first, it should be of interest to lecturers on aeronautics; second, it will allow mathematicians to visualize the actual behavior of an airplane without having to make flights; and third, it holds the possibility of mechanically solving the stability equations.

Description of Instrument. A complete view of the instrument is shown in Fig. 1. It consists essentially of a double pendulum, the lower end of which is a wheel resting on a revolving drum as shown diagrammatically in Fig. 2. The drum can be turned at any speed by an electric motor, and the stability and moment of inertia about the two pendulum axes can be varied at will. The properties of the airplane are represented in the following way:

1. The restoring moment about axis (A) is the pitching moment about the C.G. of the airplane and represents static stability or metacentric height.

2. The restoring moment about axis (B) is the damping of the airplane - M_q.

3. The moment of inertia about (A) represents the mass of the airplane.

4. The moment of inertia about (B) represents the moment of inertia of the airplane about the Y-axis.

5. The angular motion about (A) represents changes in air speed along the path - V.

6. The motion about (B) represents changes in inclination of the machine in respect to the horizon.

7. The angular movement of the wheel in relation to the drum axis represents the inclination of the path with the horizon.

Just why the above representation is true can not be explained at present, but from actual trial the instrument does behave in this manner. The speed of rotation of the drum has some influence on the characteristics of the motion, but just what this effect is has not yet been determined.

By adjusting the upper balance weight, any degree of static stability may be obtained and the change from an oscillation to a divergence is clearly illustrated. The oscillation is more stable (greater damping) when either the mass of the airplane (upper lateral weights) is increased or the moment of inertia (lower lateral weights) are decreased as indicated by theory.* The damping is also varied by changing the moment about the lower axis.

An oscillation can be produced which is stable below a certain magnitude and unstable above it. It is also possible to produce an oscillation which will damp down to a finite value and remain there permanently. This is particularly interesting as the same phenomenon has been observed in actual flight.

This particular design of instrument has the disadvantage that the moment of inertia about each axis is changed at the same time as the restoring moment so that the two effects are combined. This can easily be remedied by the use of springs instead of

* Thomson, "Applied Aerodynamics" - p. 208.

weights, and will be so changed in another instrument.

Theory of the Instrument. Instrumental records taken in flight of the air speed and path angle during an oscillation of constant amplitude show that these variables are, as closely as can be determined, sine functions of the time, but are of course at a small phase difference. The path of the airplane in space can not be a sine curve, but in stability calculations the amplitude has been assumed so small that the departure from it is negligible. By assuming small oscillations, angles may be used in place of sines of angles and the usual theory of Bryan and Bairstow can be applied. Working in the same way, W. P. Angel has carried out an analysis of this instrument which gives equations of the same form as for the airplane. In both cases however the oscillations are assumed small and so can not apply strictly to the actual conditions. It is felt that if an exact solution can be made of the motion of this instrument, we shall have at the same time the exact solution of the airplane motion. It is hoped that mathematicians will interest themselves in this problem.

Uses. This instrument is useful for making visible the very complex behavior of the airplane during an oscillation. In several instances new facts were observed on the instrument and later checked in flight. It can also be used for illustrating in the classroom or lecture hall the effect on stability of making changes in the various characteristics of the airplane.

It is hoped that this instrument may be used quantitatively

to determine the type of oscillation for a new airplane, by setting the characteristics (mass, moment of inertia, damping, etc.) of this airplane on the graduated scales of the instrument. Whether this can be done or not is difficult to predict, but experiments along this line will be carried out.

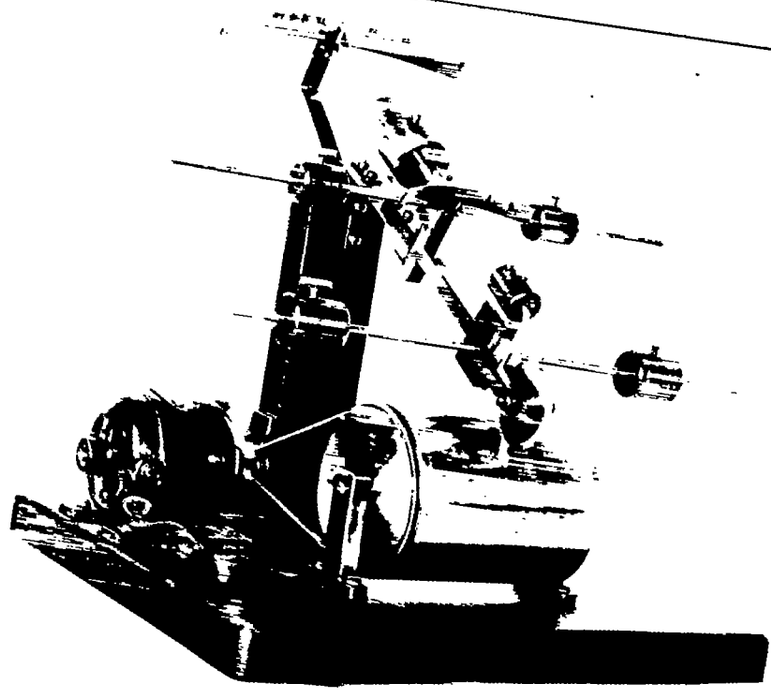

1638.A.S.

Fig. 1. Stability Instrument.

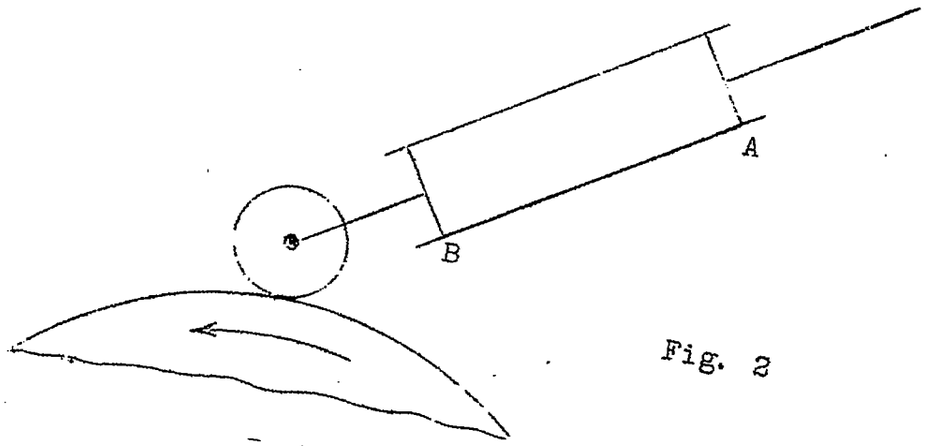

Fig. 2