[redacted]

NATIONAL ADVISORY COMMITTEE FOR AERONAUTICS.

Technical Memorandum No. 101.

FAKIR FUEL PUMP.

From "Der Motorwagen,"
December 20, 1921.

FILE COPY
To be returned to
the files of the Langley
Memorial Aeronautical
Laboratory

June, 1922.

NASA Technical Library
3 1176 01437 3261

FAKIR FUEL PUMP.

In designing the Fakir fuel pump, the fundamental idea was to obtain a simple and reliable method of conveying the fuel from a low tank to the carburetor, with the avoidance of the faults of all former methods and the simultaneous warming of the fuel by means of the heat of compression generated.

The principle of the Fakir fuel pump rests on the well-known principle of the diaphragm pump, which must however be suitably adapted to the present purpose. Figs. 1 and 2 are drawings of the pump. Inside the housing (formed by the circular wall A, the front wall A_1, and the rear wall A_2), there is a hollow body Q cast in one piece with walls A and A_1, containing the interconnected horizontal and a vertical channel Q_1 and Q_2. The channel Q_1 is open toward the diaphragm and contains the spring K which presses against the diaphragm. The channel Q_2 is connected with the inlet D_1 and above into the pump housing. The intake valve F and the pressure valve G are respectively below and above the channel Q_1. The seats of these valves are shaped out of the tube connections F_1 and G_1 which communicate with the channel Q_2. The hollow body Q also contains a second horizontal channel Q_3, which lies below the intake valve F and forms a connection between the vertical channel Q_2 and the space inside the pump housing through the return valve P (for the back flow). The latter is held shut by a spring P_1 which

* From "Der Motorwagen," December 20, 1921, pp. 779-780.

is coiled about a bolt S. The bolt and spring lie in a cross bore F_2 of the tube F_1. The bolt S is screwed into the wall A and its outer end is covered by a screw cap S_1. Below the return valve, there is a non-return or check valve T which, like the inlet valve, is provided with a strainer to keep out any dirt there may be in the fuel. The diaphragm lies between the wall A and the cover J which is clamped on to a special shaped base. This base, which is formed by the wall A_1, is so made that the diaphragm can only yield within suitable limits, without danger of rupture or fatigue, and is then supported by the base so that the high cylinder pressure cannot hurt it. The distance of oscillation in either direction and the pressure of the diaphragm spring have been adjusted by many experiments, so as to come within the limits of elasticity of the metal diaphragm and prevent the possibility of fatigue. For the protection of the diaphragm from the spring, there is a pressure plate on the end of the latter. The gas-pressure space, inclosed between the diaphragm and the cover, is (through the elbow M_2 and the channel M_4, which opens into the gas space through the cross channel M_5) in direct communication with the engine cylinder.

The Fakir fuel pump operates as follows: The pressure variations in the engine cylinder produce oscillations of the diaphragm. During the period of diminished pressure in the engine cylinder, the oscillation of the diaphragm (supported by the force of the spring behind it) draws fuel from the tank, which is then (during

the period of compression, explosion and exhaust) driven out again. This process, which is continuously repeated all the time the engine is running, pumps considerably more fuel than the engine requires. The excess fuel must therefore be rendered harmless. This is accomplished by the automatic flow of the excess fuel (which does not run through the outlet E_1 to the carburetor) back through the return valve P into the fuel column under the intake valve F. In order to prevent this action from causing any return flow of the fuel column into the fuel tank, the check valve T is introduced. The pump therefore always delivers to the carburetor only the quantity of fuel required at the time by the engine, while the excess fuel circulates inside the pump. Now, since heat is produced by compression, this circulating fuel is highly heated by coming in contact with the thin metal diaphragm. The fuel is still further heated by the heat conduction of the metal pipe connecting the pump with the engine cylinder, in which pipe hot gases, oil and other fluid residues of the explosions oscillate to and fro. After the engine has been running a short time, these fluid residues fill up the gas space (between the diaphragm and cover J) and parts of the delivery pipe, so that, in practice, no increase in the volume of the clearance space takes place in the engine. By suitably adjusting the size and length of the delivery tube from the pump to the engine cylinder, it is possible (within certain limits) to give the fuel any desired amount of preliminary heating and, even for low

initial temperatures of the fuel in the tank, obtain final temperatures of 30-35°C in the float chamber of the carburetor. Experience has shown that engines with fuel warmed in this manner can use cold air even in winter and still develop a high degree of efficiency, as well as be able to utilize difficultly volatile fuel.

The Fakir fuel pump can be installed anywhere between the fuel tank and the carburetor, since the flow of fuel to the pump does not depend on gravity, but on adjustable pressure. It may be further said that it is proof against all shocks and changes of inclination on motor vehicles of all kinds (including water and air craft), since it has no movable parts aside from the four valve balls which are held by springs. The chances of its getting out of order are therefore reduced to a minimum. It requires no attention, aside from seeing that the piping is tight, which is an essential condition for any pump.

Translated by the National Advisory Committee for Aeronautics.

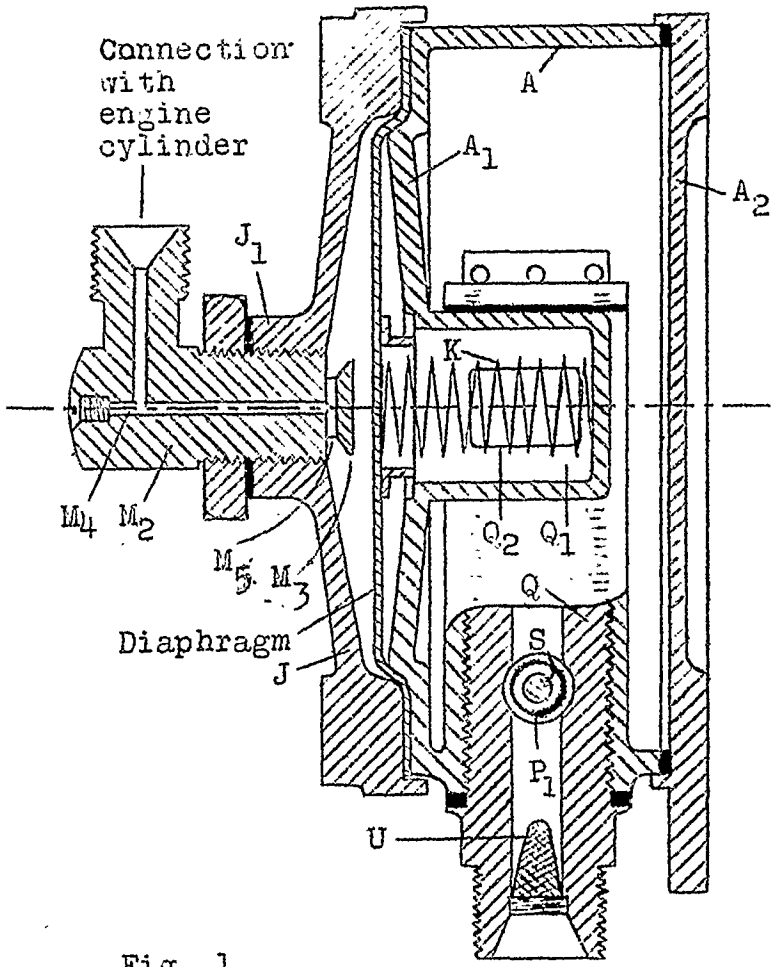

Fig. 1

Section A-A

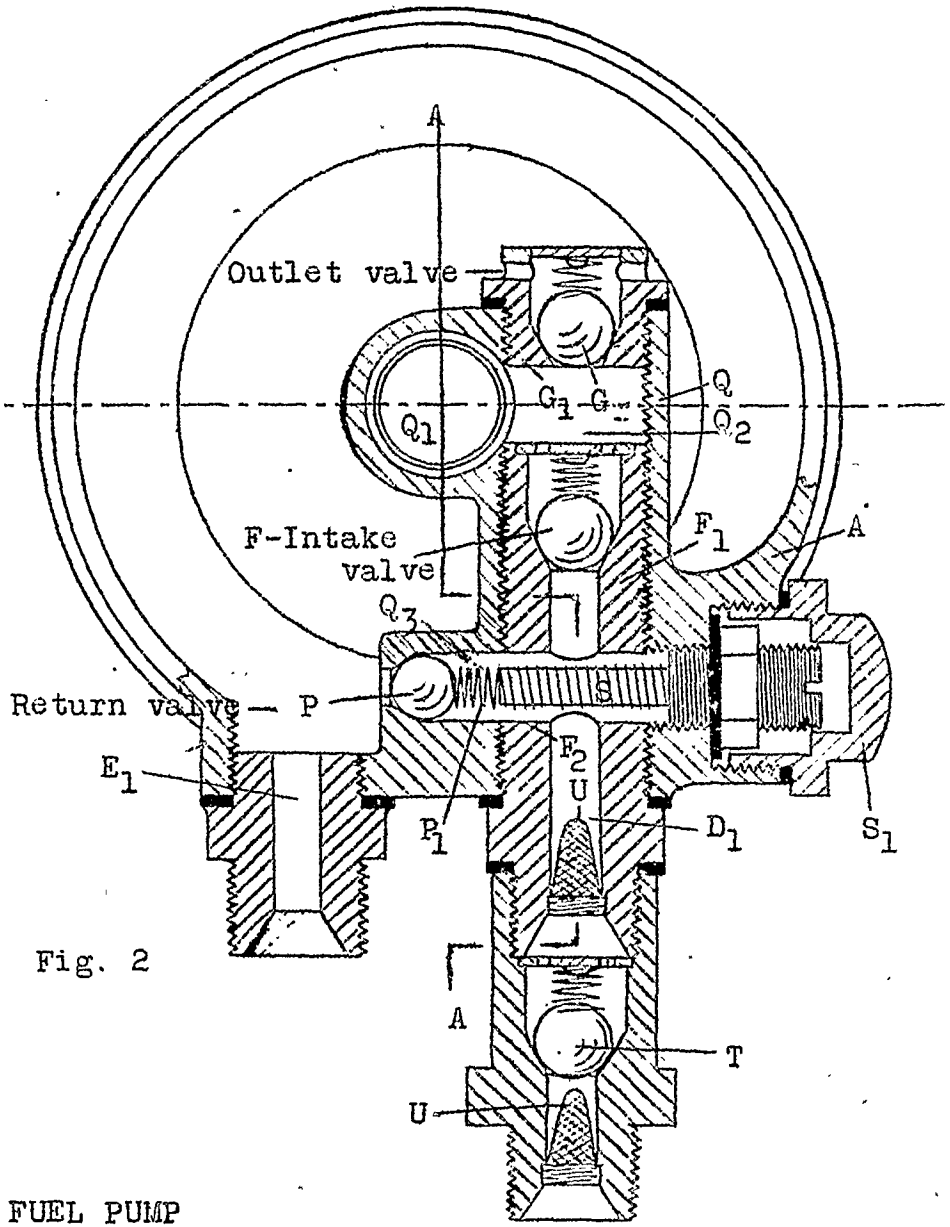

Fig. 2

FAKIR FUEL PUMP

NASA Technical Library
3 1176 01437 3261