NATIONAL ADVISORY COMMITTEE FOR AERONAUTICS.

164

164

HOW TO LAY OUT AND BUILD AN AIRPLANE LANDING FIELD.

Notes on Shape and Size of Plot, Runway Details, Type and Arrangement of Buildings, Drainage of Field, Best Kind of Grass and Proper Marking to Aid Pilots.

By Archibald Black.

From Engineering News-Record, September 28, 1922.

FILE COPY
To be returned to
the files of the Langley
Memorial Aeronautical
Laboratory.

November, 1922.

NASA Technical Library
3 1176 01437 3428

HOW TO LAY OUT AND BUILD AN AIRPLANE LANDING FIELD.*

Notes on Shape and Size of Plot, Runway Details, Type and Arrangement of Buildings, Drainage of Field, Best Kind of Grass and Proper Marking to Aid Pilots.

By Archibal Black.

With various municipalities throughout the country considering the establishment of airplane landing fields, the arrangement of them becomes a problem which the city engineer is likely to be called upon to solve. Owing to the newness of the airplane industry little attention has been given to the systematic arrangement of such fields. While the Air Service has some very fully equipped fields, these were constructed under pressure of war conditions and at a time when the requirements of such fields were not fully understood. In addition to this, the army equipment is considerably more elaborate than is likely to become necessary at municipal fields for some time. Consequently, the city engineer charged with arranging a municipal field who attempts to copy the features of some army field, is likely to make as many errors as he avoids.

Shape and Size of Plot.- In general, a square plot is the most suitable shape for a landing site, because it permits airplanes to take off or land in any direction. As the airplane must always take off and land headed into the wind, the importance of wind direction and its effect upon the field layout, will be immediately appreciated. Where the direction of prevailing winds, throughout the year, is subjected to considerable variation, the square field is essential. In cases where less variation of wind direction is recorded,

* From Engineering News-Record, September 28, 1922.

the plot may be narrowed until it becomes a comparatively narrow rectangle where little variation is shown. Before the property is purchased, Weather Bureau records should be consulted and this information obtained. It is one of the most important points for consideration in the arrangement of the field. In comparing the direction of the winds, their importance may be assumed to vary with the square of their velocity and directly as their frequency. Rough sketches of possible arrangements can then be made and the purchase of the plot negotiated intelligently.

The size of the plot will depend upon the useful length of the runways which can be provided. For the general run of airplanes and for low altitudes, say below 1,000 ft., a clear runway length of 2,500 to 3,000 ft. should be provided. This should be liberally increased for higher altitudes but the requirements regarding length of runways at altitudes are so dependent upon the types of machines that no general rules can be laid down. Thus, if the field is to be square, a 2,000 x 2,000-ft. plot will be required. If conditions permit, this size should be slightly increased. It is very undesirable to use a smaller plot, although it is possible to use one of about 1,800 x 1,800 ft. with slightly increased risk of accident. If the plot is to be L-shaped, the legs of the L should not be less than about 1,000 ft. wide, in addition to providing runway length. Where the field is surrounded by, or runways obstructed by, tall buildings, power lines, etc., the size must be increased. A good general rule is to assume that such obstructions render useless the adjacent part of the field, or territory around it, for a distance

of 8 to 10 times their height. Fig. 1 shows a variety of different shapes of fields drawn to the same scale and each providing 2,800-ft. runways.

General Arrangement.- In the general arrangement of any landing field provision should be made for hangars, shops, garages, field office, gasoline and oil storage, runways, roads, field marking, water, telephone, electric-power lines and, where necessary, field drainage. While many of these facilities will not be provided for some time, it is good policy to consider them all from the start. The plans should be prepared showing future as well as immediate installations. Only in this way can the field be expected to provide a logical arrangement when fully developed. The additional cost of this forethought and consideration is negligible, while neglect might prove expensive later. Fig. 2 shows what may be regarded as an ideal field layout using the square plot. This arrangement cannot be copied for any location; it must be adapted to the local conditions. Great consideration should be given to future expansion. The field, if laid out as indicated in Fig. 2, is so elastic in arrangement as to be capable of expansion to the limit of its capacity without moving any of the original buildings or equipment.

Buildings should be liberally spaced in order to reduce the fire hazard, which is usually serious at these fields. So much ground is necessary for runway purposes that there is nothing to be gained by crowding the buildings close together. All buildings should be on the side nearest to the road so that it is not necessary for automobiles or persons to cross the field to reach any of

them. The arrangement shown provides for the field office and the miscellaneous buildings in the center of one side, with the hangars on each side, roadways and railroad spur behind. This is probably the most convenient all-round arrangement but it may have to be modified to suit local conditions. No matter what arrangement may be used, great care should be taken to keep all structures, roads, etc. away from the ends of the runways.

Buildings.- The hangars should be arranged, preferably facing the field, so that airplanes may be conveniently taken in or out. There other considerations permit, these buildings should face south as this protects them somewhat from the cold north winds and makes conditions less uncomfortable for the mechanics in winter. In the case of the floors being of cinders, it also allows the sun to shine inside and keep this floor dry when the large door is open. The hangar layout should be sufficiently elastic to permit erection of several types of buildings without destroying the general arrangement. While the field may be provided with buildings of a certain size at the start, those added later may be very different in size and shape. If some effort is made to anticipate the possible variations in future buildings, much trouble may be avoided and the space utilized to better advantage as the side of the field becomes crowded with structures.

A study of all of the existing types and sizes of hangars on the American market showed that a 300 x 300-ft. plot appeared to accommodate itself better to the various arrangements than a smaller size. This plot also has the advantage of permitting the erection

of an ultimate building of 300 x 200 ft. outside, should conditions ever warrant. As the largest airplane built to date has a span of only about 131 ft., this size of building should provide sufficiently for future machines. Fig. 3 shows some of the sizes and types of hangars which can be accommodated on the proposed "standard plot", where space permits, its use is recommended. This same size of [illegible] may be used for all of the other miscellaneous buildings as well as for hangars, unless local conditions necessitate otherwise. No rule can be formulated for the relation between hangar, garage and shop floor space as this will vary for each project. In most civil fields part of the hangars will probably be used for shop purposes at the start. The gasoline and oil house should be located well away from other buildings but convenient to both field and road so that either airplanes or automobiles may make use of its facilities. The field office building should be so placed that the field manager, pilots, or others who may have business there, can view the field, gasoline station, wind indicator, etc., from its windows. Such location will save considerable running around by these men when the field is in use.

Runways.- In all cases the runways should be arranged with regard to both the direction of the higher prevailing winds and to [illegible] freedom from obstructions, either inside or outside of the field, at their ends. They should be as long as the size and shape of the field will permit, but arranged so that the pilot can take off directly into the wind as nearly as possible all of the time. They should also be arranged with some regard to the possibility of al-

lowing space for a turn back into the field to effect a landing in case of engine failure while taking off. It will probably be found that the arrangement of two crossed runways comes nearest to providing this in most cases. Except where the soil drains very well, the part of each runway likely to be most used should be surfaced with cinders, slag or stone about 75 ft. wide for a distance of about 1,000 ft. The part of the runways likely to be most used will be that part on the end towards which the higher prevailing winds blow, excepting possibly 100 ft. at the extreme end. If funds limit the work, it might be well to consider that the surfacing of a strip less than 50 ft. wide and 750 ft. long is of very doubtful value. A track from the hangars to the surfaced part of the runways should also be surfaced. The width of this portion will vary according to conditions, but it would be well to provide a strip at least 25 ft. wide and located so that an airplane 100 to 150 ft. wide can be rolled along it without touching the buildings.

In the early days of aviation airplanes took off from and landed upon any convenient part of the field, using the grass-covered surface as a runway. Grass never was entirely satisfactory for this purpose. It held the soil together only when the traffic was infrequent and even then the ground softened up at certain periods of the year. As the business develops, the use of prepared runways is becoming accepted as necessary. Such runways must be constructed to carry the load of the airplane during its run over the surface before taking off and after landing. They must also resist damage to their surface when landings are effected thereon, this being probably the

severest requirement. Table 1 gives some sizes of airplane tires with the loads which they may be normally expected to carry and impose upon the runway surface when at rest or moving slowly. The tendency in commercial and other machines today is towards lighter loadings of the tires. With good runways, this may revert back to the full load of the table.

Table 1.- Some Airplane Tire Sizes with Their Normal Loads.

Size of tire, in.	Normal load, lb.
26 x 3	325
26 x 4	750
26 x 5	1,000
32 x 6	1,650
36 x 8	3,100
44 x 10	6,000

The actual load at the moment of landing depends so much upon the machine and the pilot that it is impossible to give it any definite value. It may be less than the figures above, but is more likely to be greater. Landing gear stress calculations are usually based upon an arbitrary weight of 4 to 6 times the weight of the airplane. It is very improbable, however, that loads even approaching this will be imposed upon the runway surface.

The types of surface most suitable for roads are not generally suitable for runways. The runway surface must not be so soft that the wheels sink into it or the take-off run will be seriously affected. On the other hand, it must not be too smooth and hard or the machines landing upon it will roll an excessive distance after landing. It has been found in practice that a good compromise sur-

face can be obtained with cinders or slag, rolled just enough to remove the excessive looseness without solidly compacting the surface. Such a surface neither retards rolling too much nor too little, drains itself well and holds up under usage. As concrete has sometimes been proposed, and even used, for runways, it might be well to mention here that it is not suitable for this purpose unless separate runways are provided for taking-off and landing. It provides an excellent surface for taking-off from, but is entirely unsuited to landing on because of its smoothness. The cost of concrete construction also is so high as to make it prohibitive on most projects.

The runways should be crowned as little as possible. If they are to be drained to each side it is suggested that the crown be about 1/4 inch to the foot of width. If drained by percolation, either with or without artificial drains, it may be possible to slightly decrease even this figure. It is very important that no open ditches be located in the vicinity of the runways. If ditches are necessary for drainage of runways, they should be filled to the level of the field with broken stone, gravel, or other available material. Very large stones should be used in filling the bottom of the ditches and the size should be gradually decreased to small sizes at the top. This will prevent the ditch from filling up with silt during rains. The sides of the runways must be free from shoulders or ridges, not even shallow gutters being permissible in connection with the drainage system. The preferable method of draining the runways is by percolation. Where the soil is porous (gravel, sand, etc.) this can be obtained by merely using a porous runway con-

struction. Where the soil is not sufficiently porous to take care of drainage naturally, a system of drainage ditches, filled with broken stone or gravel, should be constructed below a porous runway and arranged to carry away precipitation.

If the extreme ends of the runways are graded to an appreciable rise, this will tend to decrease the danger of collision with the fence or running over the property line when an airplane takes off and is immediately forced to land through engine or other trouble. A rise in grade of this kind should not end precipitately, but should drop gradually to the fence line. Another method of decreasing danger of overrunning is to raise a dense growth of tall grass on the ends of the runway. Either of these methods or, what is probably still better, a combination of both, might be used to retard the progress of any airplane approaching the fence too closely. It is probable that the adoption of reversible propellers, in the near future, may render such precautions less necessary but it is always well to have them.

Grass.- The infield itself should be well drained and, where natural drainage cannot be relied upon throughout the year, an artificial drainage system should be provided. On all parts of the field surface not covered by buildings, roads or runways a growth of tough all-year grass should be raised to bind the surface. The type of grass required will vary according to the soil and it would be well to consult some reliable seedsmen familiar with its characteristics. Peter Henderson & Co., of New York, were consulted regarding the conditions to be met and made the following recommendations:

Use about even proportions of:

Canada Blue Grass	*Hard fescue
Fancy Kentucky Blue Grass	*Sheeps fescue
Fancy red top	*Red fescue
Meadow fescue	Pacey's perennial ryegrass

*For soil having more than the usual proportion of sand increase the amounts of these.

As a strong, thick turf is desirable on flying fields, the grass seed should be sown at the rate of from 150 to 200 lb. per acre according to the fertility of the soil.

Roadways and Railroad Tracks.- Roadways should be provided to connect each of the field buildings with the entrance and with each other. The arrangement should be as comprehensive as funds will permit so that drivers will use these roadways in preference to driving over the sod. It is advisable to regard most of the roads as double track and to surface them over a width of 16 ft. Where there is little possibility of vehicles passing each other, they could be constructed as single track, 8 ft. wide. As these roads may be expected to be neglected to quite some extent, they should be well drained and crowned. If a railroad spur is to be brought into the field it should be carried along back of the hangar, shop, garage and stockroom buildings. In the case illustrated, such a spur is provided and space is left for a future parallel track with crossovers so that cars may be left behind any one of the buildings.

Field Markings.- Two types of markers for the guidance of pilots should be provided in the layout. These are the field marker and the international marker. The first serves the purpose of identifying the field and showing the direction of the runways. Assuming the

adoption of the Air Service recommendations, it will consist of a white circle, as shown in Fig. 4, inside of which are lines indicating the direction of the runways. The international marker was created by the International Air Convention, to which the United States is a signatory, and is designed to enable pilots to identify the towns in which the field is located. This marker is intended to be placed on the right hand side of every railroad track where it enters the town. Only in some of these cases will one of these markers be adjacent to the field, but they should be constructed during the construction of any municipal field where they do not already exist. The Air Service recommends placing one of these markers on the northwest corner of each landing field where not adjacent to the one by the railroad track. This should be good practice to follow.

A marker of this type is shown in Fig. 5. The open-sides rectangle represents the lower or upper half of the quadrangle formed by the lines of latitude and longitude, while the dot represents the relative position of the town in this quadrangle. The numbers indicate the latitude and longitude of the south and west sides of the quadrangle. Either the name of the town or the telegraphic call of the field may be added as shown. The most convenient and practical method of constructing markers of either type is to remove the sod, fill in with broken stone, or other suitable material, and tamp or roll down. Only the large sizes of stone should be used The thickness after rolling should be 4 to 6 inches and the stones should be whitewashed or painted to increase visibility of the marker.

Miscellaneous.- If water pipes are available in the vicinity of the field, lines should be extended into it and to each shop, hangar, etc., building. If no water line is available, a well should be sunk as the water supply is of considerable importance. Where electric power and telephone lines are available anywhere in the vicinity, these should be extended into the field, the power lines being carried into each and every building, the telephone line into the field office at least. Every effort should be made to confine the line poles to the rear of the field buildings. In any case, where they pass the ends of the runways, even if outside the field, they should be lowered. If radio equipment is to be installed, the preferable arrangement is to provide a remote controlled station with the aerials at least ten times their height distant from the field. Where this cannot be done, they should be as low as possible and located directly in back of the buildings. No matter where they are located, they should be rendered as visible as possible both by day and night. This may be obtained by painting the towers or poles in alternate stripes of black and white and by mounting small electric lights on the extreme points of each. In most cases it is advisable to fence the field along the side of the public roadway. If the surroundings are quite undeveloped it will not be necessary to carry this fence around the entire field, but it will probably be sufficient to carry it back from the public highway about a couple of hundred feet to discourage entry by other than the regular gate. All buildings, fences, etc., on the field, and any dangerous obstacles outside of it, should be so painted as to be very plainly visible.

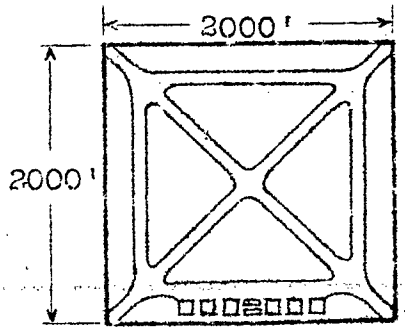

Square field
(92 acres)

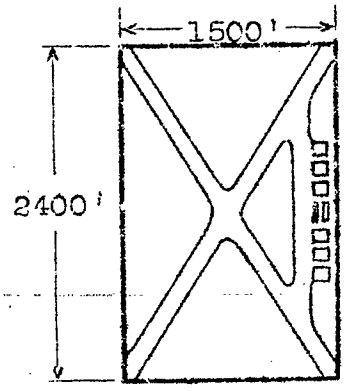

4 way rectangular field
(83 acres)

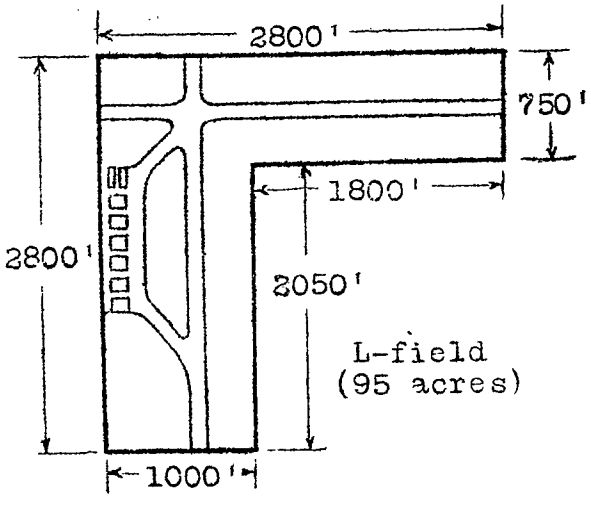

L-field
(95 acres)

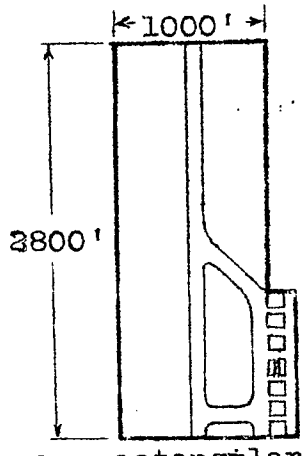

2 way rectangular field
(69 acres)

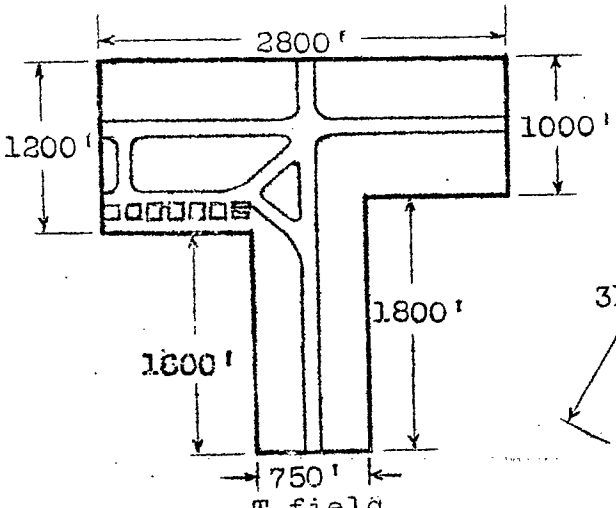

T-field
(95 acres)

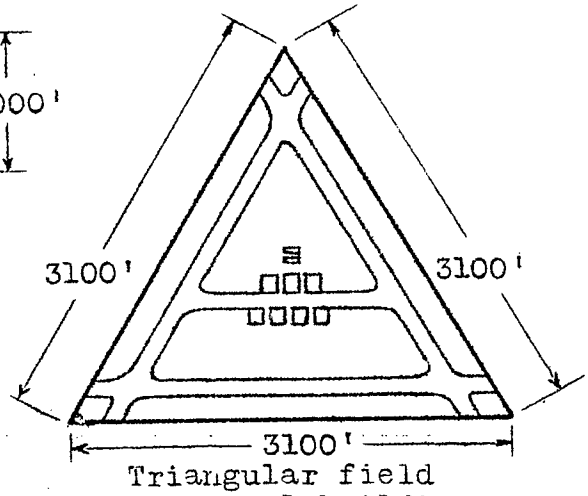

Triangular field
with central buildings
not recommended
(96 acres)

Light lines indicate 2800' runways and most used connections.

Fig.1 Types of landing fields with 2800' runways

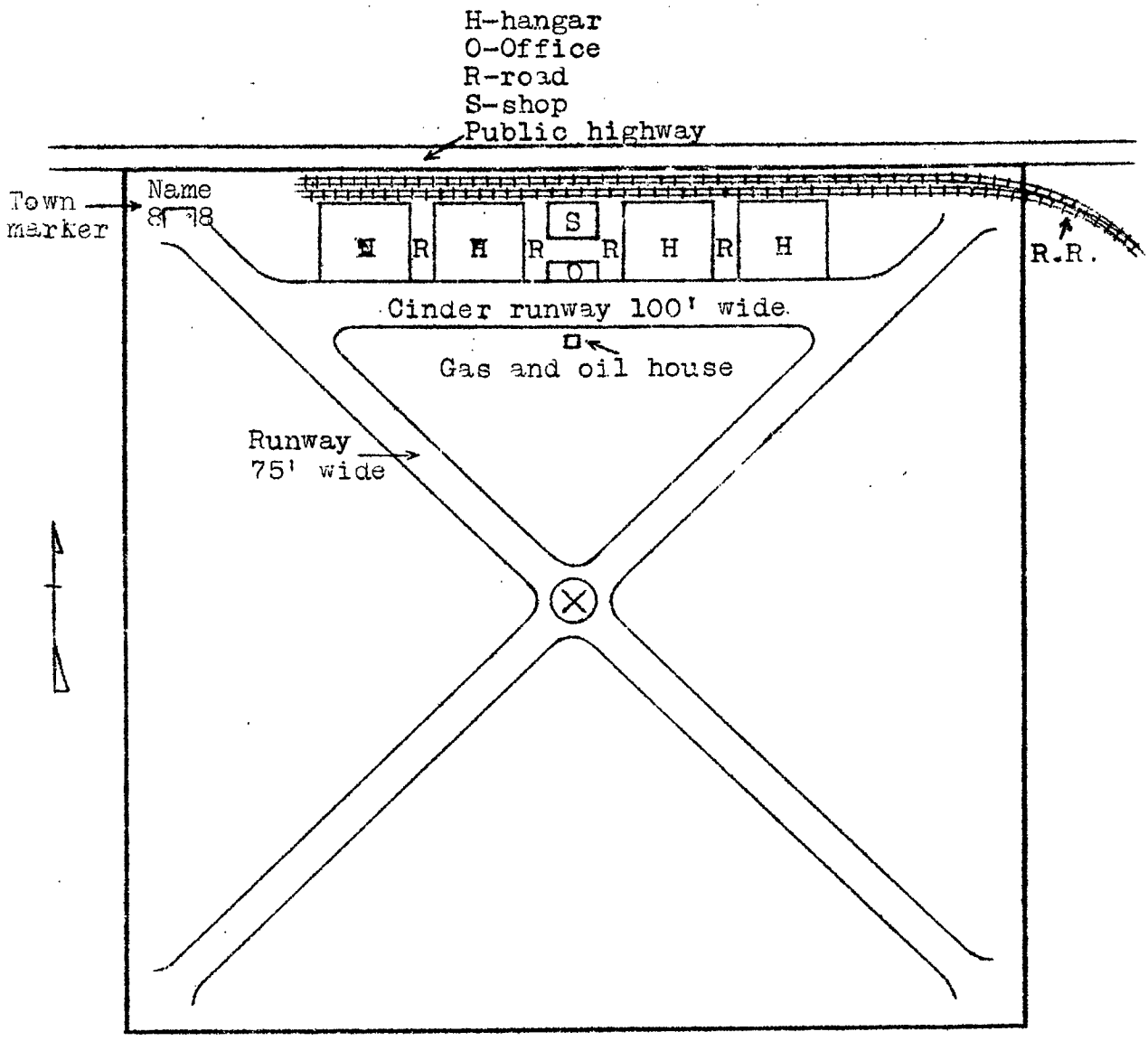

2000' x 2000'

Fig.2 Ideal square field for airplane landings

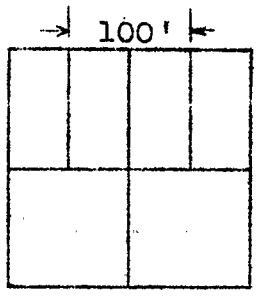

Strauss
Shown with and without fire isolation spacing

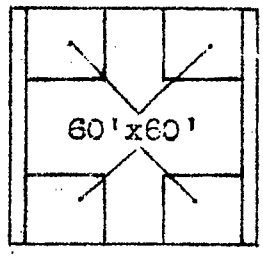

Milliken

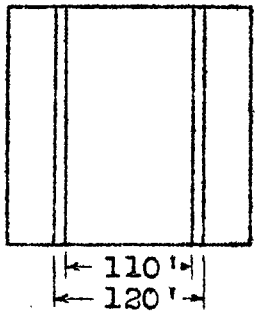

Air Service steel (large)

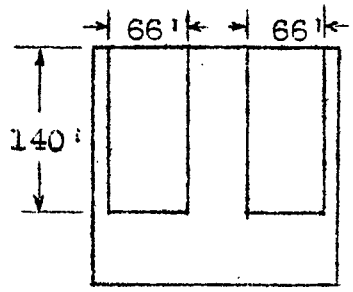

Air Service steel (small)

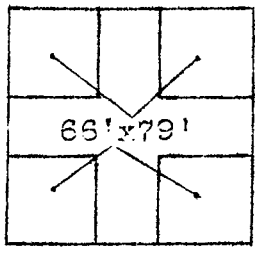

Bessonneau

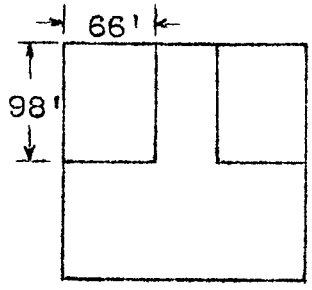

Air Service
Wood & steel

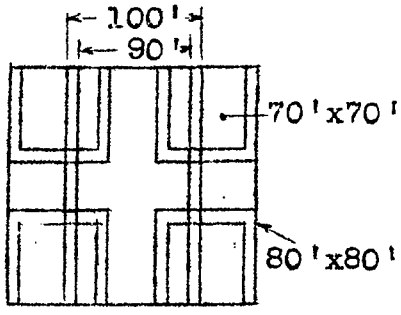

Austin factory type building. Semi-standard

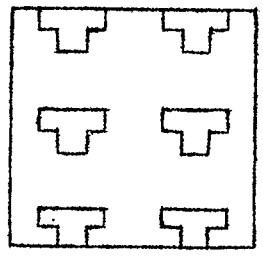

Unit hangar for JN-4 or DH-4

Minimum fire isolation spacing about 50'

Fig. 3 Some possible hangar arrangements in "standard" 200' x 200' plot.

NASA Technical Library
3 1176 01437 3428