3 1176 00007 7496

NATIONAL ADVISORY COMMITTEE FOR AERONAUTICS.

169

TECHNICAL MEMORANDUM 169

169

EFFECT OF METHOD OF SUSPENDING MODELS IN AIRSTREAM ON RESULTING MEASUREMENTS.

By C. Wieselsberger.

From "Zeitschrift fur Flugtechnik und Motorluftschiffahrt," July 15, 1922.

FILE COPY
To be returned to
the files of the Langley
Memorial Aeronautical
Laboratory.

November, 1922.

9.2.1

EFFECT OF METHOD OF SUSPENDING MODELS IN AIRSTREAM ON RESULTING MEASUREMENTS.*

By C. Wieselsberger.

Foreign laboratories have recently published two works containing communications regarding the effect of the method of suspending models on the resulting measurements. In the experiments for the determination of this effect, the forces exerted on wing models were measured by an aerodynamic balance of the Eiffel type. The results of these experiments are so unfavorable, that the value of experiments with models is put in doubt. Although such a result was not to be expected with the method of suspension employed in the Göttingen laboratory, we nevertheless decided to investigate systematically the errors in the measurements due to the manner of suspension. Before giving the results of these experiments, however, we will give a brief account of the researches in the two foreign laboratories.

One series of experiments on the effect of the suspension method was carried out in the Eiffel laboratory in Paris in 1921.** A wing model 70 x 15 cm (27.56" x 5.9") was attached to an ordinary Eiffel balance in three different ways and the polar curves of the wings were determined. In the Eiffel method of suspending a wing, a streamlined vertical rod reaches to the middle of the

* From "Zeitschrift für Flugtechnik und Motorluftschiffahrt," July 15, 1922, pp. 188-191.

** Robert, "Utilisation des Resultats des Essais faits sur petits Modeles au tunnel aerodynamique pour le calcul des Aeronefs en vraie grandeur." (Applying results of experiments on small models in wind tunnel to calculation of full-sized aircraft.) From "Premier Congres International de la Navigation Aerienne," Vol. I, pp. 5-13. For translation see N.A.C.A. file 1105.5-26.

airstream. To this rod is attached a horizontal arm extending against the airstream, to the front end of which the wing model is fastened. The three different ways of fastening are shown in Fig. 1. The model was first held by two rods on top (Method 1), then by two rods on the bottom (Method 2) and, lastly, on the front end of a single rod (Method 3). These three suspension methods gave the polars shown in Fig. 2, which differ considerably from one another. The first suspension method gave the most unfavorable polar, the second the most favorable, while the third suspension method gives air-force coefficients, which lie in part between the other two curves. If we assume that the correct polar lies about in the middle between the two plain curves, the deviations of the latter are so great as to give such experiments only a very restricted value. They can indeed serve for comparing different wing models with one another, but in no case are they suited for conversion to full-sized wings.

Another series of experiments was carried out in the laboratory of the "Rijks-Studiedienst voor de Luchtvaart" in Amsterdam.* The latter institution, which is provided with an Eiffel balance, likewise investigated a wing with two different suspension methods very similar to Methods 1 and 2 already mentioned, namely, an attachment of the suspension rod to the top of the model, corresponding to the rather crude method of the Eiffel laboratory, and an attachment to the under side of the model, both methods being shown in Fig. 3. The investigated wing had

* "Voorloopig onderzoek van den invloed van de wijze van ophangig van het model bij aerodynamische metingen," in "Verslagen en verhandelingen van den Rijks-Studiedienst voor de Luchtvaart," Amsterdam. Vol. I, 1921.

the ground-plan of a double trapezium, with a span of 120 cm (47.24"), a chord of 19.87 cm. (7.82") in the middle and 12.8 cm (5.04") at the tips. Fig. 4 gives the polars obtained for both suspension methods. It is evident that the difference is considerably greater here than in the first series. Since the true position of the polar curve can be determined approximately from the location of the parabola for the induced drag, we see that the second suspension method gives a polar, which probably lies considerably nearer the true polar than the one given by the first method. Notwithstanding this, the result with the second suspension method is not entirely convincing, since the resistance is too small, according to previous experience, for the aspect ratio employed.

In the Göttingen laboratory, small steel wires have been used from the first to suspend the models. In regular wing tests in the 2.2 meter (7.22 ft.) airstream, the model is usually held by six wires of 0.3 to 0.4 mm (.118 to .157 in.) diameter. Three other wires serve for tightening the above wires or for suspending counterweights (see Vol. I of the "Ergebnisse der Aerodynamischen Versuchsanstalt zu Göttingen," pp. 27 and 29, Figs. 19 and 21). For attaching the wires, there are three hooks, of the shape shown in Fig. 5, on the leading edge and a rod on the trailing edge. In order to determine the error caused by the suspension wires and hooks, several experiments were carried out, for which a wing of normal dimensions (wing section No. 426, span 100 cm, (39.37") chord 20 cm (7.874") was employed. After making

the measurements in the usual way; the number of suspension wires and hooks was doubled, as also the rod on the trailing edge (Fig. 6). With the double suspension, there is to be expected twice the normal disturbance of the airstream about the model, which must appear in the polar curves. The results of both methods (Tables 1 and 2) are shown graphically in Fig. 7. Both polars coincide throughout a large part of their course, only the maximum lift being a little smaller for the double suspension. The question now is whether this diminution of the maximum lift is due to the suspension wires or to the hooks. Since hitherto no especial importance had been imputed to the shape and size of the hooks, it was first assumed to be due to the latter. In order to settle this question, we carried out another experiment, in which the double number of hooks and rods was left on the wing model, but only the customary number of wires, those indicated by the dotted lines being removed (Fig. 6). With this disposition, the result of the experiment was exactly the same as in the foregoing case with twice the number of suspension wires (Table 3 and Fig. 7). Hence it follows that the observed disturbance, evidenced by the smaller maximum lift, is due only to the hooks. Lastly, it was investigated as to whether a greater maximum lift could be obtained by using the smallest possible hooks, with their front edges sharpened. The experiment carried out for this purpose, with the most favorably shaped hooks of about half the size shown in Fig. 5 and with the customary number of wires and hooks, gave nearly the same result as the first experiment with

the larger hooks, so that it may safely be assumed that with still smaller hooks no greater maximum lift can be obtained and that the disturbances caused by the suspension hooks are practically negligible. Likewise, as we have seen, no disturbance could be found due to the suspension wires of airplane wing models. Attention may be here called to the fact that the maximum lift is especially sensitive to irregularities in the shape of the models. It is, for example, extremely difficult to make two models so exactly alike that they will give the same maximum lift. Our experiments accordingly show that the errors due to the method of suspension with small wires, as employed by us, are practically negligible. This result applies only to wing models. As regards other bodies, like balloon models, etc., experiments are yet to be made.

Table 1.

Ordinary wire suspension.

Angle of attack	C_a	C_w	C_m
-8.9°	-15.3	6.65	2.2
-6	5.8	2.17	10.8
-3.1	26.0	1.74	15.6
-0.2	47.9	2.70	21.2
2.8	68.6	4.07	26.6
5.7	89.4	6.36	31.8
8.6	109.0	9.22	36.7
11.6	125.9	12.8	41.6
14.5	129.6	17.5	43.2
17.5	126.4	22.5	43.6

Table 2.

Double wire suspension.

Angle of attack	C_a	C_w	C_m
-8.9	-15.6	6.12	2.8
-6	5.5	2.09	10.8
-3.1	25.9	1.71	15.6
-0.2	46.6	2.53	20.7
2.8	66.9	3.90	26.0
5.7	88.0	6.04	31.0
8.6	106.1	8.81	35.5
11.6	122.1	12.5	39.8
14.5	127.0	17.3	42.9
17.6	121.4	23.0	43.2

Table 3.

Suspension with single set of wires and double number of hooks.

Angle of attack	C_a	C_w	C_m
-8.9°	-15.2	6.12	3.1
-6	3.9	2.13	10.8
-3.1	26.4	1.76	16.0
-0.2	46.9	2.62	21.0
2.8	68.0	4.14	26.6
5.7	88.2	6.18	31.6
8.6	107.3	9.00	36.6
11.6	123.3	12.7	41.3
14.6	126.2	18.0	43.6
17.6	123.8	23.4	44.3

Table 4.

Suspension with single set of wires and very small hooks.

Angle of attack	C_a	C_w	C_m
-8.9°	-14.9	6.45	2.2
-6	6.2	2.09	11.0
-3.1	27.1	1.84	16.2
-0.2	47.5	2.52	21.4
2.8	68.6	3.99	26.8
5.7	89.4	6.43	32.0
8.6	110.0	9.31	37.3
11.5	127.5	12.8	42.3
14.5	129.0	17.4	43.6
17.6	122.2	22.2	43.6

Translated by the National Advisory Committee for Aeronautics.

Influence of supports on results obtained in experiments.

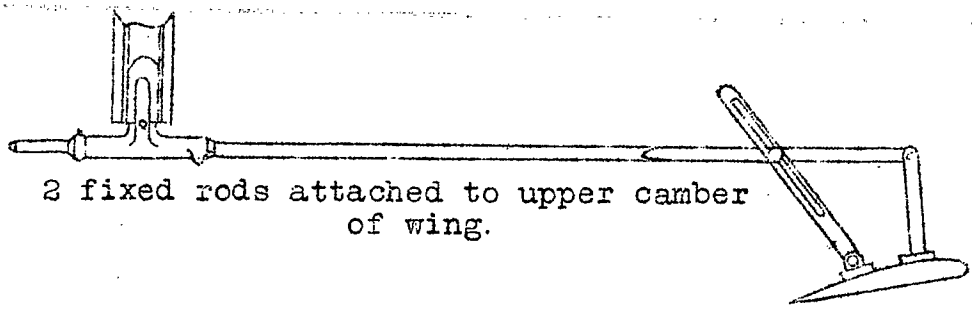

2 fixed rods attached to upper camber of wing.

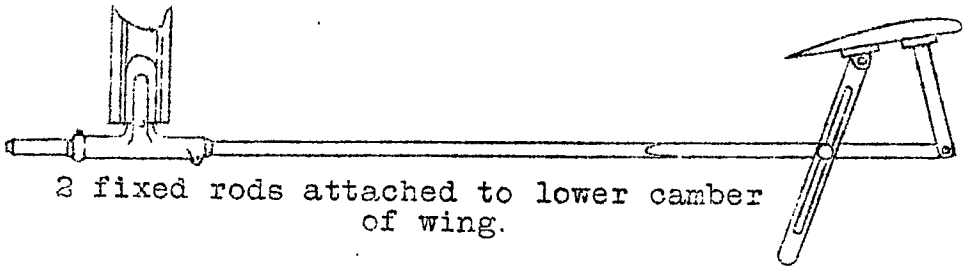

2 fixed rods attached to lower camber of wing.

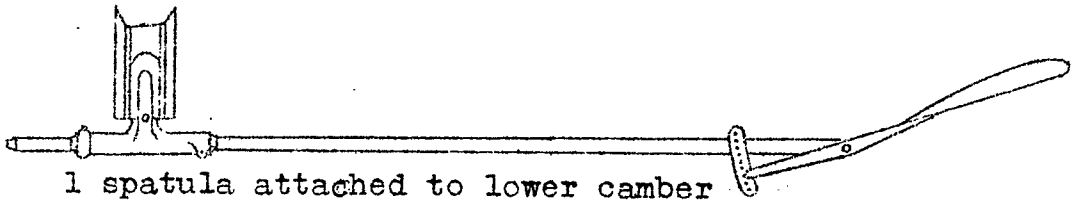

1 spatula attached to lower camber at trailing edge.

Fig. 1

Influence of supports on results obtained in experiments.

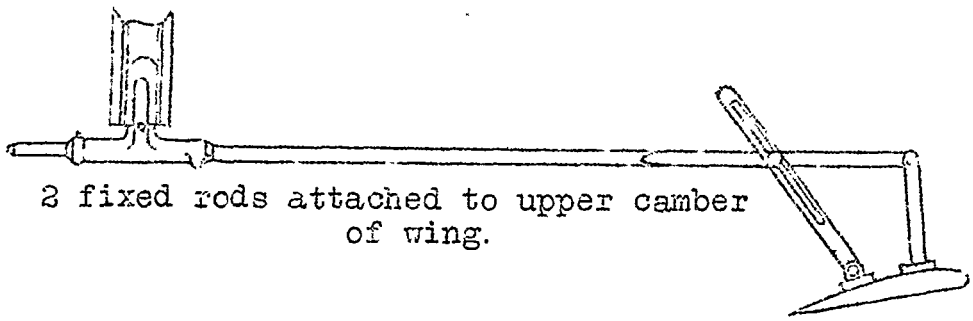

2 fixed rods attached to upper camber of wing.

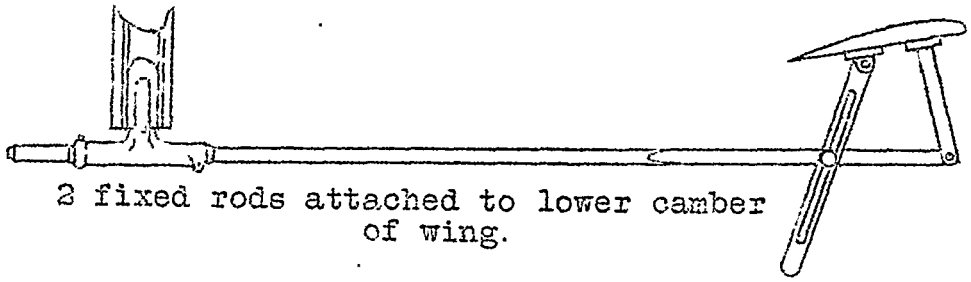

2 fixed rods attached to lower camber of wing.

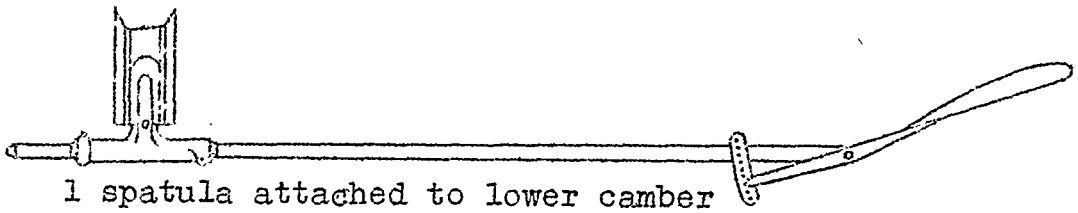

1 spatula attached to lower camber at trailing edge.

Fig. 1

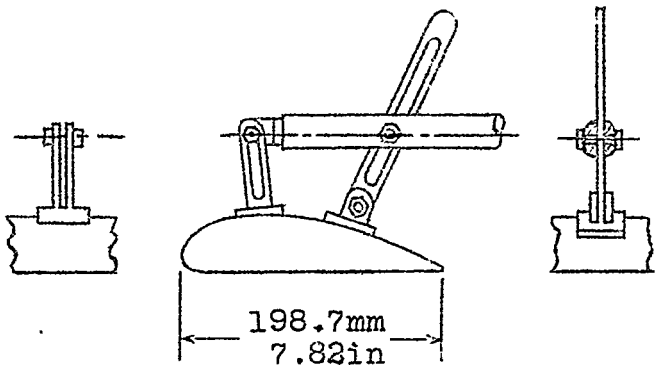

Attachments to upper camber

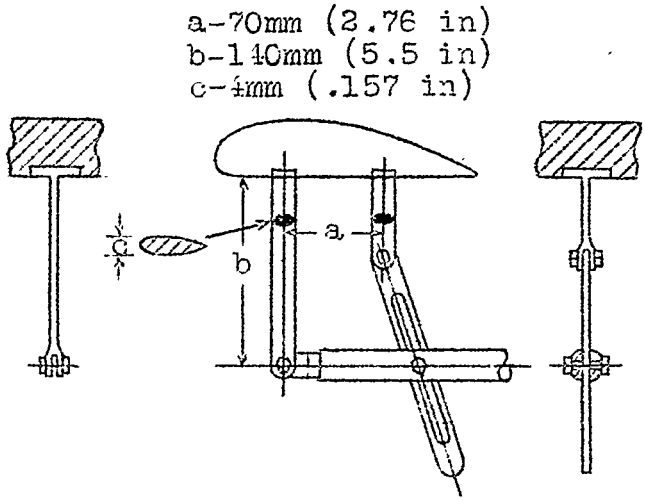

Attachments to lower camber

Fig. 3

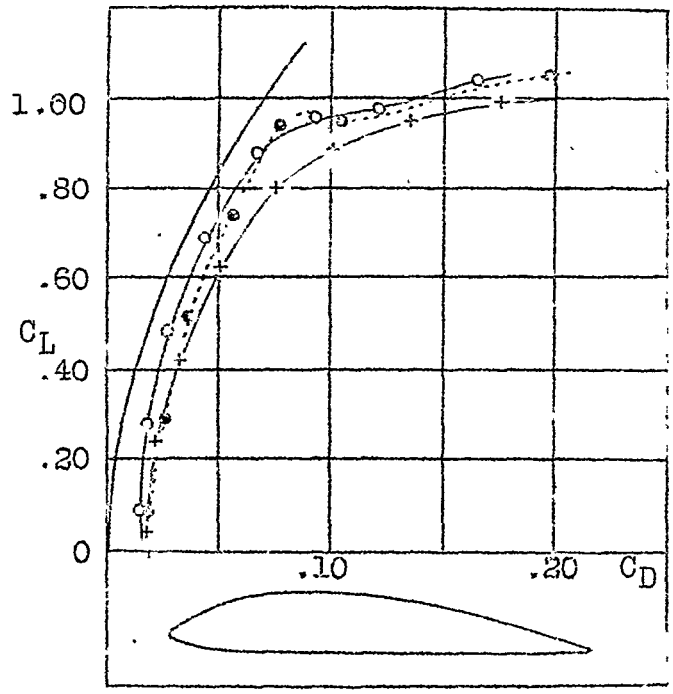

Fig. 3

+ attachment to upper camber
○ " " lower "
⊗ spatula attachment

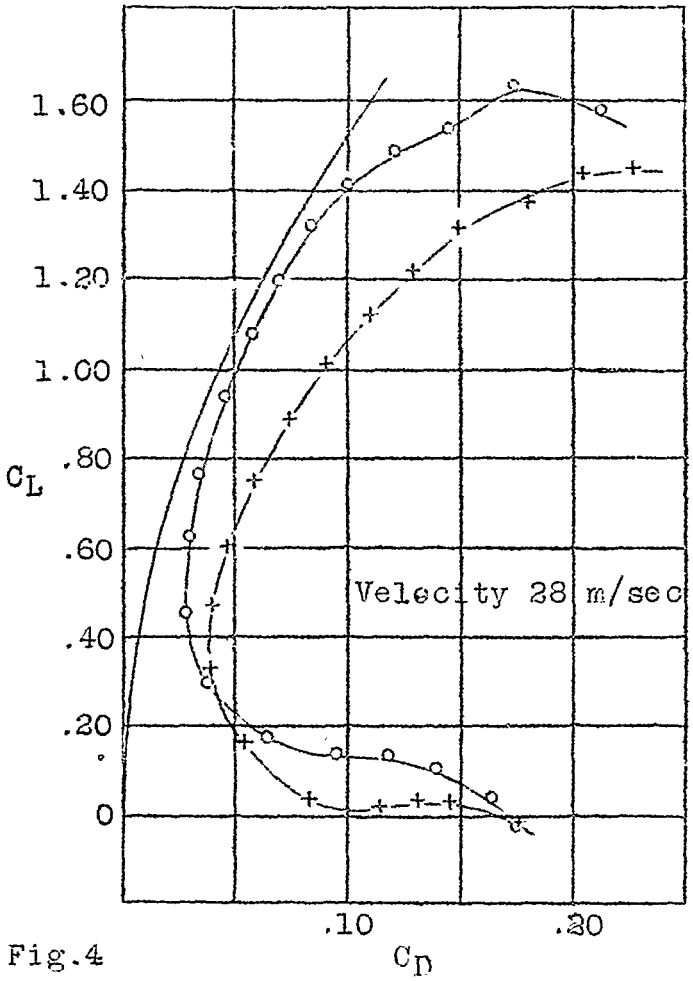

Fig.4

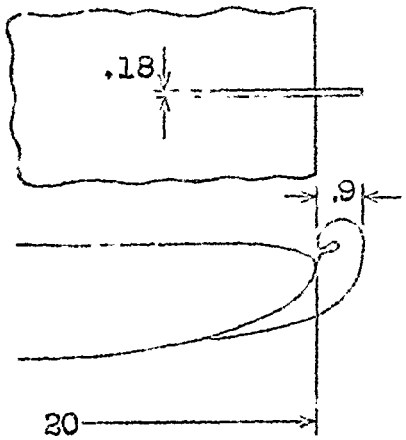

Fig.5

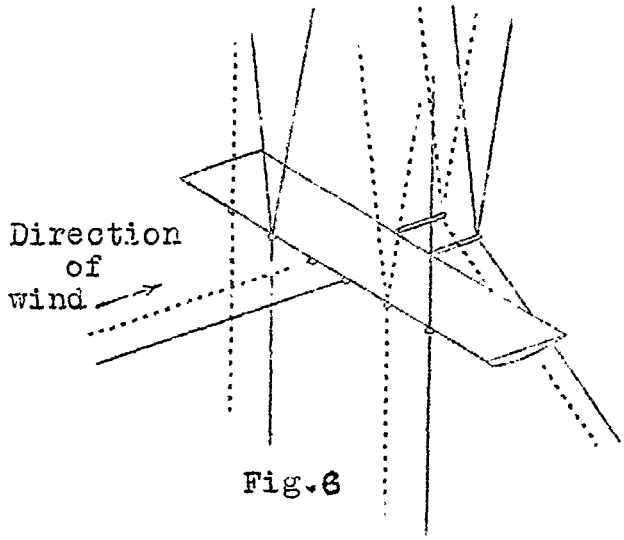

Fig.6

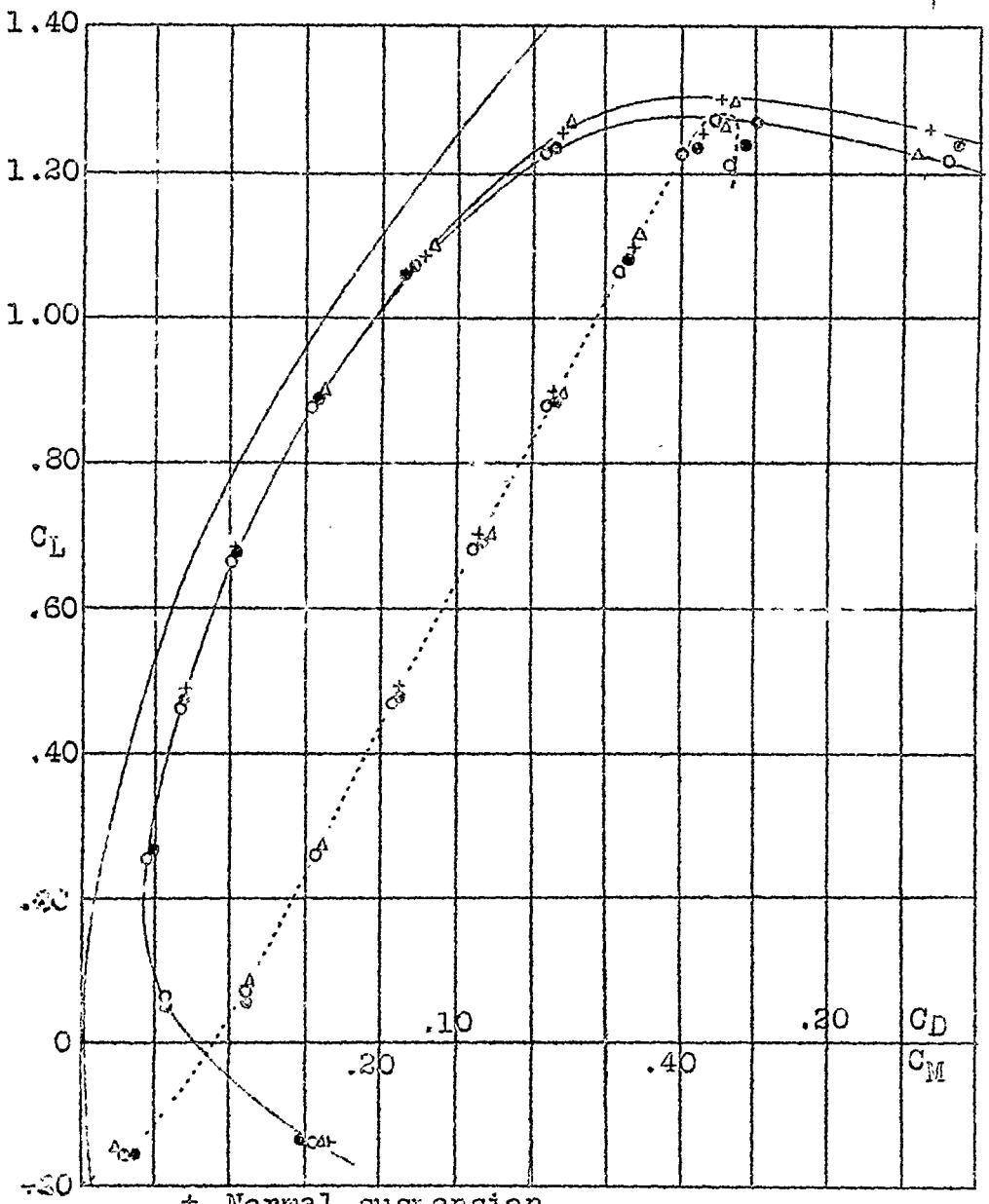

+ Normal suspension
o Double suspension
● Double number of hooks only
△ Suspension with small hooks

Fig.7