TECHNICAL NOTES.

NATIONAL ADVISORY COMMITTEE FOR AERONAUTICS.

No. 81.

LANGLEY FIELD WIND TUNNEL APPARATUS

Part I. Regulators for Speed of Wind Tunnel Drive Motor.

Part II. A Vernier Manometer with Adjustable Sensitivity.

By

D. L. Bacon,
Langley Memorial Aeronautical Laboratory,
National Advisory Committee for Aeronautics.
Langley Field, Va.

January, 1922.

NATIONAL ADVISORY COMMITTEE FOR AERONAUTICS.

TECHNICAL NOTE NO. 81.

LANGLEY FIELD WIND TUNNEL APPARATUS.

By

D. L. Bacon

PART I.

REGULATORS FOR SPEED OF WIND TUNNEL DRIVE MOTOR.

Specially designed instruments regulate the voltage supplied by a synchronous motor generator to the wind tunnel motor. This arrangement is capable of holding the motor speed constant to within plus or minus two-tenths of one per cent.

Desirability of Constant Speed.

The accuracy of physical measurements and the time consumed in making them depend very largely on the magnitude of any fluctuations which may take place with respect to time in the quantity to be measured. If two or three observations of related quantities are to be made simultaneously, the time lag of the measuring devices and of the observers may be sufficient to introduce serious errors. If these fluctuations are of sufficiently short and regular period the mean value of the desired quantity may be estimated very closely by a skilled observer. If, on the other hand, the fluctuations are very irregular, varying both in per-

iod and intensity, accurate reading is impossible and much time is consumed in taking even approximate measurements.

Wind tunnel experiments often involve the measurement of three or four variables in addition to the air speed and as these are likely to be either square or cube functions of the speed, any large variation or uncertainty in the latter must be fatal to the efficient operation of the tunnel.

The main disturbances of air speed in a wind tunnel may be due to:

1. Changes in speed of the propeller shaft traceable to the source of power.

2. Turbulent and erratic air flow, including particularly the formation and breaking of eddies in the returning stream of air.

3. Changed resistance of the tunnel to the passage of air because of changed attitude of the model being tested, requiring change in propeller r.p.m. for same air speed.

The first of these must undoubtedly be corrected before the others can be successfully dealt with.

Temporary Power Plant.

During the first year of operation of the National Advisory Committee's wind tunnel, the only available sources of electric power were a pair of 25 Kw gasoline-electric searchlight generators equipped with centrifugal governors and a 200-300 HP dynamometer driven by a twelve cylinder Liberty motor. These sup-

plied current at 250 volts to the wind tunnel drive motor, rated at 300 HP for one hour, with a base speed of 250 r.p.m. at full field strength; by weakening the field the speed could be raised to a maximum of 1400 r.p.m. Control was obtained through contactors and armature and field rheostats manipulated from the experimental chamber.

A Veeder liquid tachometer driven from the propeller shaft served to indicate variations as small as one revolution in 1000. It was thus possible to compare the relative steadiness of two sources of power with considerable exactness and without having to rely merely on the judgment of observers. Preliminary experiments showed that electrical measurements of the supply current and voltage were useless as a means of comparing the steadiness of motor speed.

Original Speed Variations.

The characteristics of the temporary power plant units may be given as follows:

The 25 Kw generators when operated singly had a tendency to hunt, apparently due to faulty manifolding and to insufficiently rapid governor action. Although they could hold a nearly constant voltage when carrying a resistance load they were incapable of carrying the wind tunnel motor for a period greater than 30 seconds without its changing by at least 1% in speed while changes of 5% were frequent and 10% were not unusual. With both machines in parallel the fluctuations occurred more frequently

but their magnitude remained approximately the same as with a single generator.

The Liberty engine, having no governor, was controlled by a mechanic who set the throttle to hold approximately constant voltage for changes in load. He made no attempt to follow slight changes in voltage while the tunnel was operating at a supposedly constant speed. When delivering 100 HP or over and with everything in first-class condition this power was occasionally very good, holding the wind tunnel shaft speed constant within 1/2% for considerable periods and somewhat closer than this for a few seconds. It had the serious disadvantage however of seldom coming back to its original speed after a fluctuation but of settling down to some new speed instead. This made it essential to keep a man constantly at the control rheostat prepared to correct the speed after each excursion. If any of the spark plugs fouled through long idling, which was frequently the case, the propeller speed usually became so erratic that the engine had to be shut down and the plugs cleaned before continuing the tests.

The Elimination of Variations in Shaft Speed.

The new power installation* uses a 200 Kw synchronous motor generator which is supplied from the local power-house four miles away by a three-phase 60-cycle 3450 volt line on which this motor generator set is the greatest load.

* This apparatus was designed and furnished by the Westinghouse Electric & Manufacturing Company, East Pittsburgh, Pa.

The control system is rather complicated in its detail wiring diagram but the accompanying schematic diagram will serve to illustrate the principles of operation.

The synchronous motor generator set is shown with two direct connected exciters A and B, while the exciter C is direct connected to the propeller motor shaft.

Assume the set to be running. Then exciter A, whose voltage is maintained constant by the regulator A, is seen to be furnishing constant excitation to the synchronous motor, the wind tunnel motor and the pilot generator C. This pilot generator by acting upon the solenoid of regulator B, governs the voltage of the exciter B and hence the field strength of the D.C. generator, the D.C. line voltage, and consequently the speed of the wind tunnel motor.

More explicitly: the voltage across the terminals of pilot generator C is proportional to the speed of the wind tunnel propeller shaft. If for any reason the r.p.m. of the propeller and motor drop off the voltage of C likewise decreases and actuates the regulator B to increase the field on exciter B and thus raise the voltage of the main generator which tends to restore the speed of the propeller to the original value.

The system is thus in a very stable state of equilibrium. To set the motor for any given speed the field of exciter C is adjusted to suit by means of the two rheostats shown in its field circuit.

The regulator armatures are adjusted to vibrate, normally, about five times per second, which means that the speed correcting impulses occur with the same frequency. It is obvious that no disturbing influence can act for an appreciable length of time without engendering its own remedy. The apparatus as now adjusted suffices to hold the propeller speed constant to within plus or minus two revolutions per minute when running at 1000 r.p.m. and somewhat closer at lower speeds.

Further Improvements.

The problem of obtaining practically constant propeller speed having been solved, there still remain the two other disturbing factors of erratic air flow and interference of the model with the air velocity. The methods used to eliminate these disturbances will be outlined in another note.

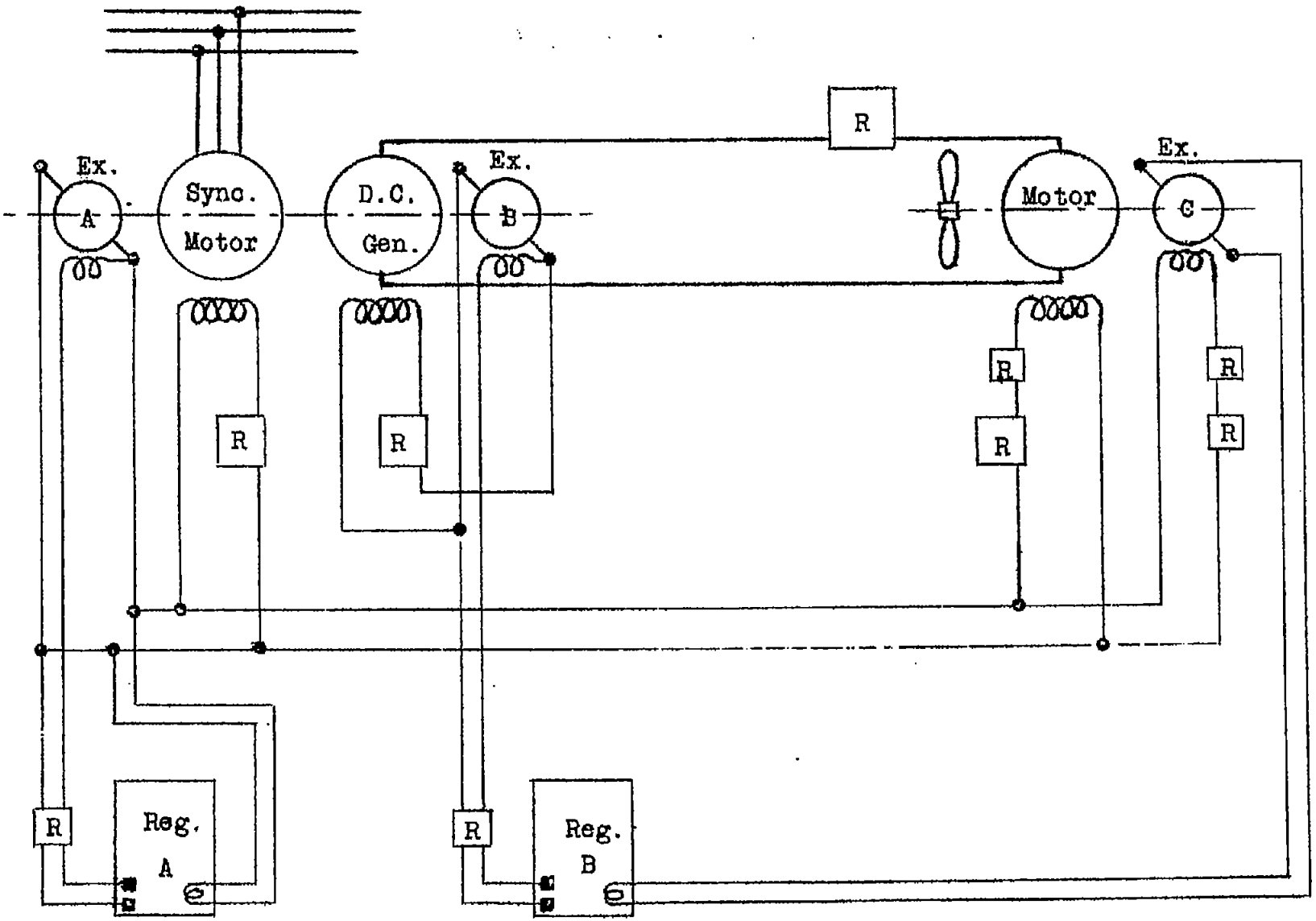

No. 1 Wind Tunnel - Power and Regulating Equipment.

National Advisory Committee for Aeronautics.

PART II.

A VERNIER MANOMETER WITH ADJUSTABLE SENSITIVITY.

In this instrument the air pressure is balanced against the head of liquid in a movable indicator tube, the height of which may be accurately measured relative to the constant level in a reservoir. It is portable, requires no calibration and may be adjusted for sensitivity and for damping.

Referring to the accompanying illustration, it will be seen that the gauge comprises a cylindrical tank or reservoir mounted on a frame hinged to the base plate and adjustable in height by means of a screw. The short glass indicating tube is mounted on a disc which may be rotated to incline the tube at any desired angle from the vertical in order to increase or decrease the sensitivity of the meniscus. The standard reference line, which in operation is made to coincide with the meniscus, passes through the center of this disc and forms part of a short auxiliary scale, the graduations of which correspond approximately to variations in head of 0.1 mm. (.004 in.) at the lowest angle of the indicating tube and of 2 mm. (.08 in.) at the highest angle. These are used only while observing small fluctuations from the mean head and permit the estimation of such excursions to 0.01 mm. (.0004 in.).

The frame supporting the indicating tube slides smoothly upon the square vertical rod and may be delicately adjusted in

height by means of a small pinion meshing with a rack on the back side of the post. Sufficient friction to keep the frame from moving by its weight alone is furnished by a concealed spring of suitable tension, but the gauge may be locked against vibration or other disturbance by a thumb screw. Readings of the mean head of liquid are made by means of a centimeter scale graduated on the column and a corresponding vernier on the sliding frame, reading to 0.1 mm. (.004 in.).

A telltale glass fitted with a movable index is connected to the high and low pressure sides of the reservoir and immediately indicates any change in the zero reading due to expansion, leakage, or tilting of the base plate.

In preparing the gauge for use the vernier is first set at zero and then the reservoir is raised or lowered by means of the adjusting screw until the meniscus in the indicating tube is tangent to the reference line. The pointer on the telltale glass is then set to mark the zero level.

As the volume of liquid in the tubing is constant there is no change of head inside of the reservoir and consequently no correction is required for the relative cross sectional area of the indicating tube and the reservoir, as is necessary with the Krell type of gauge.

Provision is made for the viscous damping of fluctuations in pressure by means of a selective alcohol cock which either connects the gauge tube directly with the reservoir or through a

a short or a long section of hypodermic tube projecting from the cock into the tank, depending on the amount of damping desired. Damping through a needle valve is not considered satisfactory as errors may be introduced by a tendency to build up a pressure difference across the orifice.

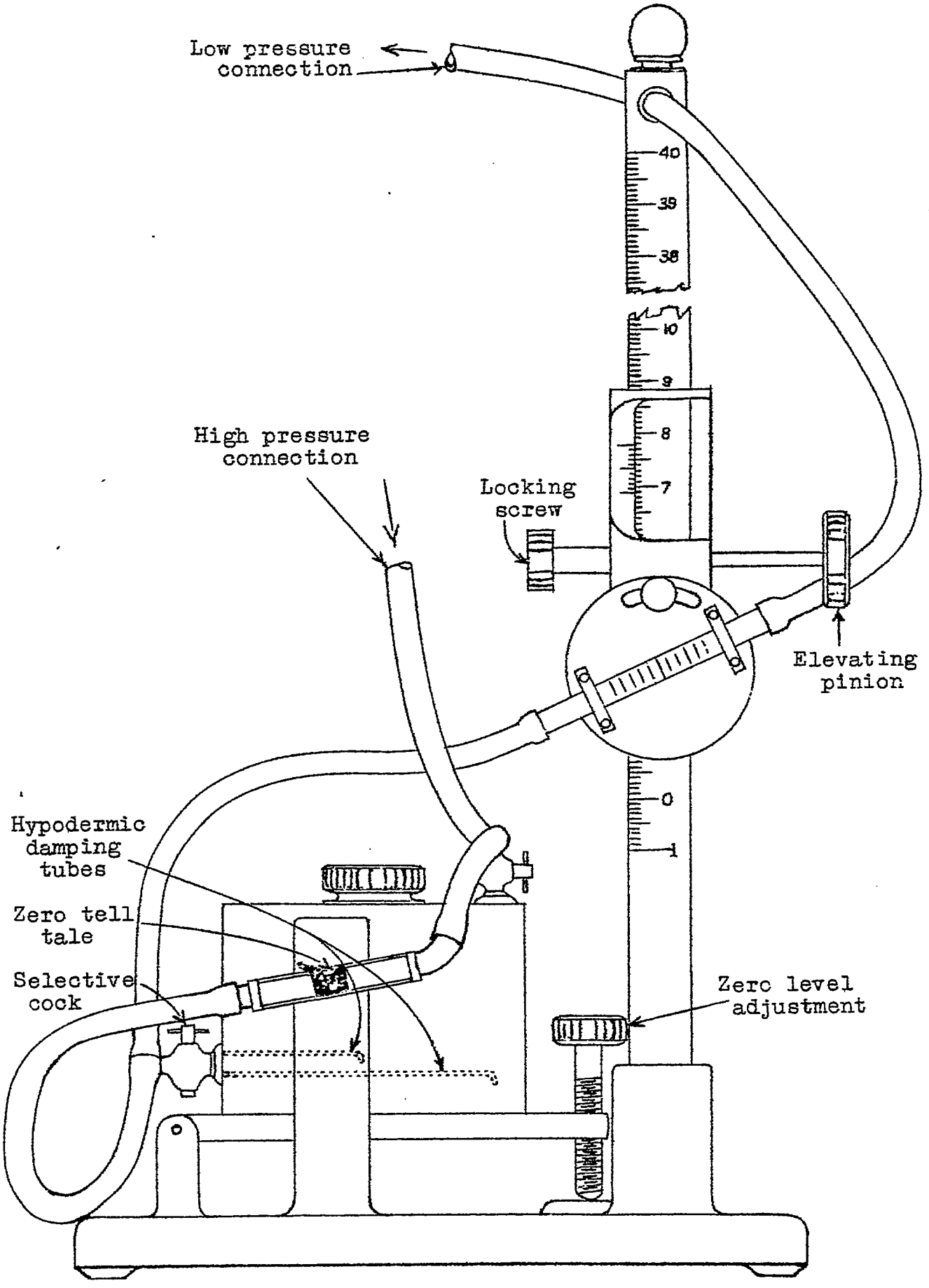
Low pressure connection
40
39
38
10
9
8
7
High pressure connection
Locking screw
Elevating pinion
0
1
Hypodermic damping tubes
Zero tell tale
Selective cock
Zero level adjustment