REPORT No. 130

AERONAUTIC INSTRUMENTS
SECTION VI

OXYGEN INSTRUMENTS

By F. L. HUNT
Bureau of Standards

REPORT No. 130.

OXYGEN INSTRUMENTS.

By Franklin L. Hunt.

INTRODUCTION.

This report is Section VI of a series of reports on aeronautic instruments (Technical Reports Nos. 125 to 132, inclusive) prepared by the Aeronautic Instruments Section of the Bureau of Standards under research authorizations formulated and recommended by the Subcommittee on Aerodynamics and approved by the National Advisory Committee for Aeronautics. Much of the material contained in this report was made available through the cooperation of the War and Navy Departments.

It has been shown that at altitudes above 15,000 feet the physical condition of aviators is seriously affected from lack of oxygen, unless artificial means is provided to supply the deficiency. The physiological symptoms are headache, which is usually the first symptom noted, palpitation, fatigue, numbness of the limbs, pains in one or both ears, which may persist for several hours, weakening of the attention, diminished sense of stability, vertigo, faintness, and finally loss of consciousness, with consequently disastrous results unless consciousness is regained before the earth is reached. It has been definitely determined that flying at altitudes of 20,000 feet or more for extended periods can not be undertaken without serious injury to the central nervous system of the aviator. These physiological symptoms can be almost entirely avoided by supplying to the aviator artificial oxygen during flight.

The normal man at full atmospheric pressure breathes approximately 16 times per minute. The volume of each inspiration is about one-half liter, so that 8 liters of air is breathed per minute, of which 1.6 liters is oxygen. This, however, is the minimum required. During flight the aviator is continually in a state of physical activity and, therefore, needs more oxygen. It has been found that 4 liters per minute is not an excessive amount to supply, allowing for inevitable losses at the mask.

The pressure of the air at sea level is approximately 14.7 pounds per square inch. It decreases at the rate of approximately one-half pound per square inch for every 1,000 feet of ascent for the first 10,000 feet and more rapidly at the higher altitudes. At 20,000 feet the pressure, and consequently the density, is approximately one-half of that at the surface of the earth; i. e., at each inhalation at this altitude the aviator would receive only one-half of the oxygen that he would get at full atmospheric pressure. The conditions for altitudes up to 30,000 feet on the assumption that the aviator requires 4 liters of oxygen per minute at full atmospheric pressure and breathes at the normal rate at high altitudes, are shown in Table I.

In column 1 is the altitude in feet computed from the formula

$$H=62900 \log_{10} \frac{759.6}{P}$$

where P is the barometric pressure in millimeters. A constant temperature of 10° C. is assumed. Column 2 gives the amount of oxygen in liters per minute which one man would receive, computed on the assumption that 4 liters per minute are required, by the relation $V=4\frac{P}{760}$ where V is the volume in liters and P the atmospheric pressure in millimeters of mercury. In column 3 is the deficit which must be supplied in order that he may receive the normal amount of oxygen. Column 4 shows the amount specified by the British and the United States Bureau of Aircraft Production. French specifications require a delivery of 0.5 liter per minute at 3,000 meters and 2.5 liters per minute at 8,000 meters.

TABLE I.

Altitude (feet).	Oxygen available (liters/min.).	Oxygen deficit (liters/min.)	Supplied British and United States.
30,000	1.3	2.7	2.7
25,000	1.6	2.4	2.4
20,000	1.9	2.1	2.1
15,000	2.3	1.7	1.7
10,000	2.8	1.2	1.2
5,000	3.3	0.7	0.7
0	4	0	0

It thus appears that for high altitude flights approximately 150 liters of artificial oxygen must be supplied per person per hour, and under average conditions a supply for a 2½-hour flight is carried. Enough space is available in the fuselage of an airplane to store in bags the 350 or more liters required. Such bags have been made by the French weighing 1.2 kilograms and carrying 360 liters of oxygen under atmospheric pressure with a total capacity of 720 liters, which is necessary in order that the bags shall not burst during the ascent. Means are also provided to maintain a constant pressure in the bags. This is accomplished by the use of a smaller compensating bag in which the pressure is maintained constant by the speed of the airplane. Incendiary bullets set fire to the envelope and the use of such bags has consequently been discontinued.

The two methods in practical use for storing the oxygen supply are (1) to compress the required amount of gas into steel cylinders and (2) to liquefy the oxygen and carry it in a suitably constructed receptacle in liquid form. The French have used for compressed oxygen a cylinder of steel 3 millimeters thick of 360 liters capacity, weighing from 4 to 4½ kilograms, with a volume of 2,000 to 2,400 cubic centimeters and an inside diameter of 6.5 centimeters. The gas is under a pressure of 175 atmospheres. The British aviation service has used cylinders of chrome steel of 500 liters capacity, weighing 3 kilograms, which are filled with gas at 150 atmospheres. Specifications of the United States Bureau of Aircraft Production required seamless steel cylinders of 500 liters capacity at a gage pressure of 2,250 pounds at 60° F. The tanks are approximately 4 inches outside diameter and 20 inches long and weigh 12 pounds each.

The Germans use liquid oxygen exclusively. It is carried in vacuum-jacketed receptacles considerably lighter than the steel cylinders required for compressed oxygen.

Special containers for storing and transporting liquid oxygen have been developed by the British. These consist of a double-walled spherical vessel with inner and outer surfaces of spun or pressed metal 14 and 15 inches in diameter, respectively. They hold 4½ gallons of liquid which corresponds to about 15,000 liters of gaseous oxygen. The neck of the inner vessel consists of a long metal tube approximately three-eighths of an inch in diameter which is surrounded by a larger neck attached to the outer vessel. An air-tight collar is provided at the top between the two necks. The space between the inner and outer vessels including that between the inner and outer necks is exhausted to a pressure of approximately one-thousandth of a millimeter of mercury and the surfaces facing the evacuated space are highly polished to reduce the heat radiation. About 300 grams of prepared wood charcoal are placed in a small cup attached to the outside of the lower part of the inner vessel. This is to absorb residual gases in the evacuated space. A lead tube protected by a detachable cap is provided for exhausting and sealing off the space between the two walls of the container. The loss of oxygen per 24 hours by evaporation from such vessels does not exceed 7 per cent of the normal capacity of the container. Details of the German liquid oxygen apparatus, also similar ones of British, French and American design, will be considered later.

Another essential feature of the oxygen supply apparatus is a device for controlling the amount of oxygen delivered to the aviator.. This consisted in the earliest apparatus merely of a hand-controlled reducing valve attached to the oxygen supply tank which the aviator

operated to deliver oxygen according to his need. In later forms an automatic pressure regulator which maintains the pressure of the oxygen supplied independent of the pressure in the tank and an automatic control for regulating the amount of oxygen supplied to the aviator according to his altitude, is provided. In addition, when compressed oxygen is used a pressure gage is added to indicate the pressure of oxygen in the supply tank and a flow indicator to show when oxygen is passing through the apparatus. Devices which have been designed for this purpose are described in the following section.

CONTROL APPARATUS - COMPRESSED-OXYGEN TYPE.

DREYER APPARATUS.

A type of oxygen-control apparatus extensively used during the war was invented by Col. Dreyer of the Medical Corps of the British Army. This apparatus is shown in figure 1 and in detail in figure 2. It uses compressed oxygen. The pressure tank is connected at C. The oxygen passes to the pressure gage A which indicates the tank pressure in kilograms per square centimeter. Beneath the pressure gage is a reduced pressure chamber B, which reduces the tank pressure of from 40 to 150 atmospheres to a pressure of approximately 15 pounds per square inch above atmospheric pressure. From the reduced pressure chamber the gas passes through copper pressure tubing to the shut-off valve V′, the purpose of which is to regulate the supply of oxygen for one or two men and to cut the supply off entirely if desired. From the shut-off valve the oxygen is conducted by copper pressure tubing to the regulating valve W, which is controlled by the battery of aneroid diaphragms G, so that as the aviator climbs, the aneroid diaphragms under the reduced pressure gradually increase the flow of oxygen through the regulating valve W to supply the deficiency of oxygen in the atmosphere. From the regulating valve the oxygen passes through copper pressure tubing to the flow indicator F, which indicates that oxygen is passing through the apparatus, thence by tubing connected at M to the mask of the aviator. These parts are all mounted on a brass base. A case of brass as indicated in figure 1 is provided to protect the instrument. When two men are supplied a Y connection is inserted beyond M so that tubes can be run to the masks of both aviators. A fine wire-mesh filter is provided at the tank connection to prevent dirt from entering the apparatus. The pressure gage A is of the Bourdon type and is connected directly to the tank connection. Beneath the pressure gage is the reducing valve, which automatically reduces the pressure of the oxygen from tank pressure to a value slightly above atmospheric pressure. This is accomplished by the action of the corrugated German-silver diaphragm D (fig. 2), which forms the top of the chamber B, into which the oxygen flows from the tank through the valve V. Diaphragm D is connected to a lever L pivoted at P and pressing upon a spring S with a German-silver tip at V, which presses upon a German-silver valve seat at V. The pressure of the oxygen which enters V from the tank causes the diaphragm D to expand, thus pressing the spring S on the seat of the valve V through the

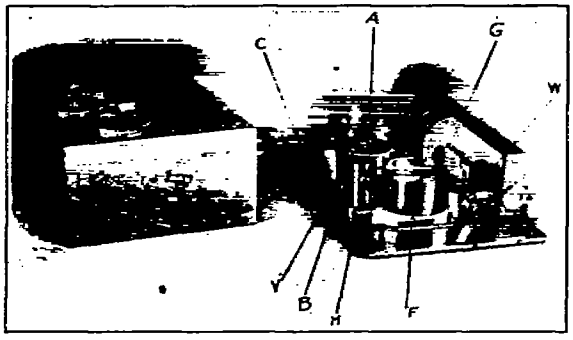

FIG. 1.—Dreyer Oxygen Apparatus.

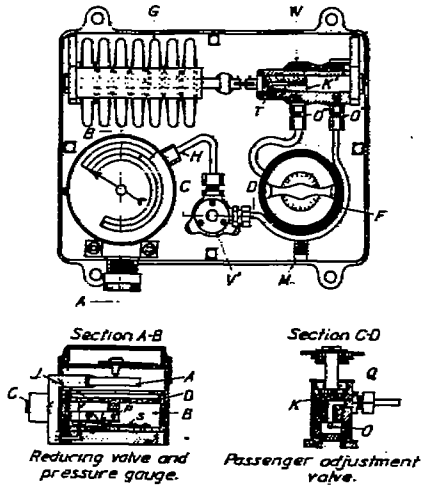

FIG. 2.—Dreyer Oxygen Apparatus.

action of the lever L. Oxygen passes from the reducing chamber B at H, thereby reducing the pressure in B, which causes the diaphragm to fall and the valve V to open. In this manner the pressure in the chamber B is automatically maintained at a nearly constant value. Above the diaphragm D is a hermetically sealed chamber J, filled with air at atmospheric pressure. The object of this is to make the action of the valve V independent of the external atmospheric pressure, which decreases as the altitude increases. It has the inherent disadvantage that the pressures of the confined air changes with the temperature; hence, at the low temperatures which obtain at high altitudes the contraction of the confined air causes the diaphragm D to partially close the valve V, thereby reducing the pressure in the chamber B, and consequently the flow of oxygen from the apparatus. If properly made this, however, should not decrease the flow more than 10 per cent. The shut-off valve V′ consists of a German-silver plug K accurately fitted to the valve case. The oxygen enters at O (section CD) and passes up through the center of the plug and thence to the outer surface at Q, communicating with a groove of variable depth cut laterally in the surface of the plug. By turning the valve the flow can be controlled through the throttling action of the groove and, if desired, entirely cut off. A graduated head is provided to operate the valve.

The aneroid control valve is shown in section at W. This consists of a German-silver plug accurately fitted to a German-silver casing. The oxygen enters at O′, flows through a passage along the axis of the plug K′, thence laterally to the surface of the plug to a groove T of variable depth cut longitudinally in the plug. This slot is located opposite the outlet O″. The aneroid diaphragms G (shown in figs. 1 and 2) are connected to the stem of the plug K′. These consist of corrugated boxes of German silver from which the air has been exhausted and which are maintained distended by internal springs. As the external atmospheric pressure decreases, the diaphragms expand through the action of the internal springs. This causes the valve plug K′ to move so as to bring a deeper portion of the slot opposite the outlet O″, thereby automatically increasing the flow of oxygen from the apparatus. By properly regulating the depth and cross section of this slot the supply of oxygen can be made just sufficient for the aviator's needs at all altitudes. The flow indicator is merely a turbine of light construction against which the oxygen from the aneroid control valve impinges in passing to the masks. The rate of rotation of the turbine gives a rough indication of the rate of flow of oxygen through the apparatus.

CLARK-DREYER AND KING-DREYER APPARATUS.

During the war instruments of the Dreyer design were produced in this country, as shown in figure 3. No essential changes were made from the British prototype; the base, however,

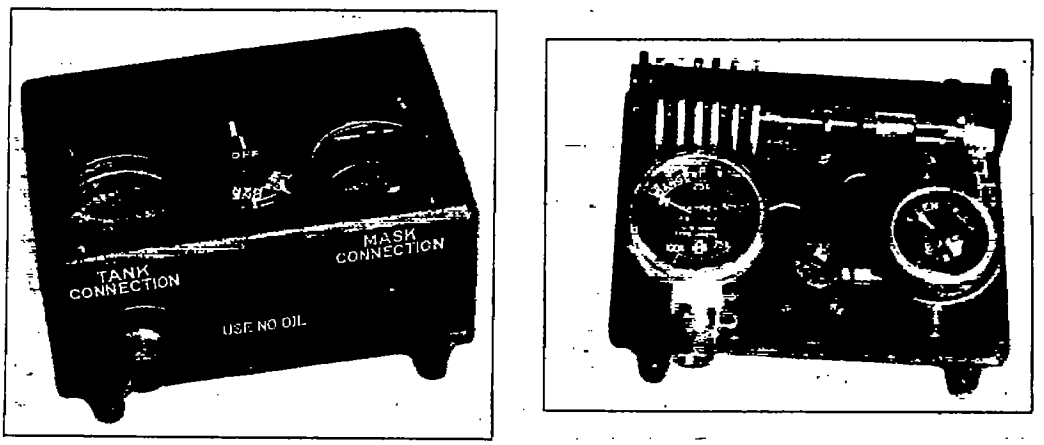

FIG. 3.—American-Dreyer Oxygen Apparatus.

is of cast aluminum instead of brass and provided with lugs with which to fasten the instrument to the airplane. The case is of copper-plated pressed steel and fits tightly over the base, to which it is fastened by screws instead of being a complete box of brass as in the British design. The

pressure gage is graduated to read in atmospheres instead of kilograms per square centimeter. The turbine is mounted on double instead of single jeweled bearings. The Y connection, used when two aviators are supplied, is connected directly to the outlet of the flow indicator, and in one of the legs of the Y is a shut-off which restricts the flow of oxygen to one mask in case one aviator only is operating the airplane.

The disadvantages of apparatus of the Dreyer type are: (1) the decrease of flow of oxygen at low temperatures, due to the contraction of the air above the graduated diaphragm of the reduced pressure chamber; (2) the tendency for the aneroid control valve to stick if the least particle of dirt or other foreign matter lodges between the piston and the walls of the valve; (3) in case one or more of the aneroid diaphragms become punctured the slot in the piston of the aneroid valve may pass beyond the outlet, thereby cutting off entirely the flow of oxygen;[1] (4) since the reducing valve is not a balanced valve the back pressure of the oxygen on the end of the piston, which acts in opposition to the tendency of the aneroid diaphragms to expand, may under certain circumstances be sufficient to prevent the valve from opening at all with decreasing atmospheric pressure.

MUNERELLE APPARATUS.

A form of apparatus very similar to that of Col. Dreyer, designed by Munerelle, is shown in figure 4. As in the Dreyer apparatus, the essential parts are a pressure gage, reducing

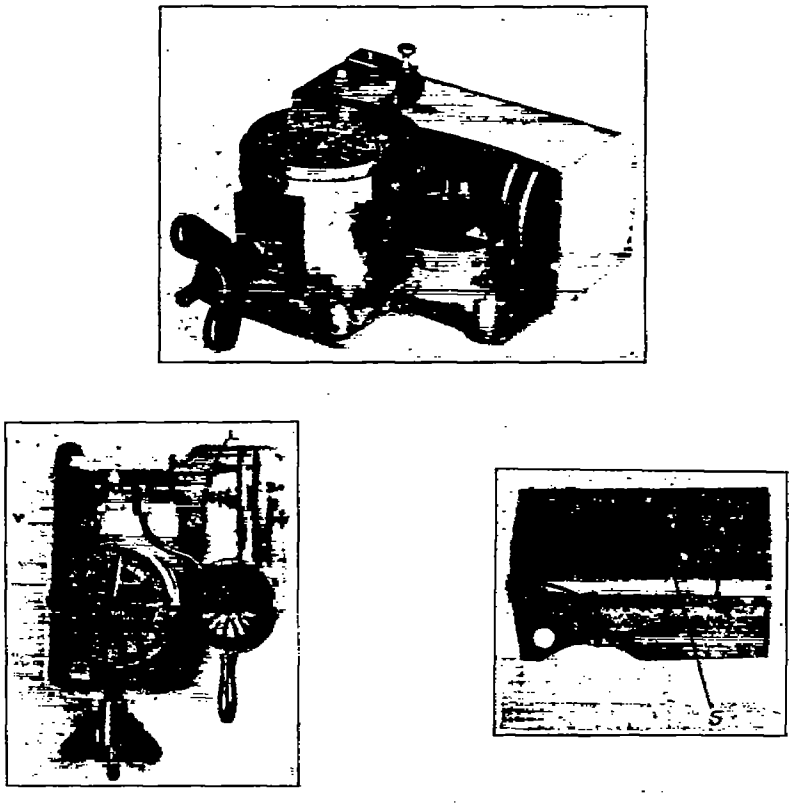

FIG. 4.—Munerelle Oxygen Apparatus.

valve, shut-off valve, aneroid control valve, and flow indicator. The pressure gage and reducing chamber and shut-off valve are practically identical with those in the Dreyer apparatus. The essential difference is that the aneroid diaphragms operate the aneroid control valve through an intermediary lever L, which lever can also be operated independently by hand by the stop S, so that in case the aneroids cease to function the aviator still is able to obtain an adequate supply

[1] This difficulty was overcome in the later models of American manufacture by providing a stop on the support of the valve stem to limit its excursion in the direction of the cut-off.

of oxygen by bringing the stop S in contact with the lever L which in turn presses against the piston of the control valve and thereby opens the valve. Two aneroids instead of seven are provided to operate the aneroid control valve. The necessary linear motion of this valve is obtained by the multiplying action of the lever L. The result is that a tendency of the aneroid valve to stick would be more likely to make the valve inoperable than in the case of the Dreyer instrument. The emergency control of the aneroid valve is a desirable feature. A regulating screw is provided at the end of the aneroids to adjust the aneroid valve. The rate of delivery is controlled by the lever S, which operates the cut-off valve V. The pointer of the flow indicator is dispensed with, the rotation of the turbine itself, which is partially radium painted, being used to indicate the flow of gas. The instrument is more compact and lighter than the Dreyer type.

CLARK APPARATUS.

To overcome some of the disadvantages of the Dreyer instrument, the oxygen apparatus shown in figures 5 and 6 was designed. Its essential parts are a pressure gage, reduced-pressure chamber, shut-off valve, aneroid control valve, and flow indicator. A by-pass or full-flow valve is also provided to allow the oxygen to pass directly from the reduced-pressure chamber to the flow-indicator chamber in case of emergency. The parts are mounted on a

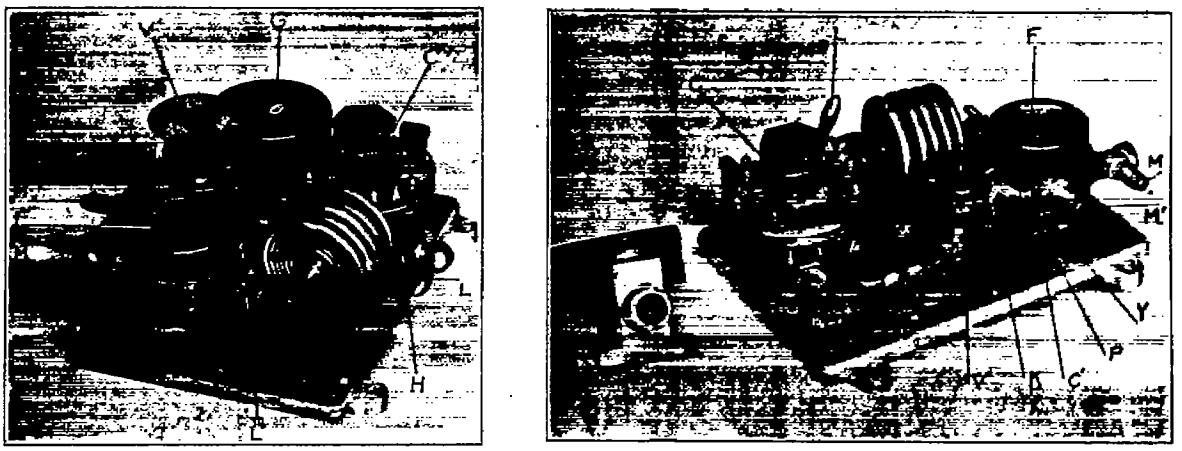

FIG. 5.—Clark Oxygen Apparatus.

cast aluminum base of the same size as that of the American Dreyer type, and a pressed steel cover like that of the latter instrument is also provided. The oxygen passes from the tank to the pressure gage G and the reduced pressure chamber C, thence to the by-pass and shut-off valve V′, which are cast in a single casing, thence to the aneroid valve V″, which is located under the flow indicator F, and finally through the flow indicator to the mask connections M M′.

Details of the reduced pressure chamber and aneroid control valve are shown in figure 6. The oxygen enters the reduced pressure chamber through the connection at O and passes to the control valve V, thence to the chamber C, causing the diaphragm D to expand, thereby bringing the bakelite valve cap B, which is attached directly to the diaphragm by a stirrup S, in contact with the German-silver valve seat. Above the diaphragm is a hermetically sealed chamber containing air at atmospheric pressure. The spring R under compression maintains the valve V normally open. An adjusting screw W permits the regulation of the flow from outside the pressure chamber. The one and two man control valve V′ (fig. 5) is of the plug type similar to that used in the Dreyer apparatus. The by-pass valve H (fig. 5), which is also of the plug type, is operated by a lever L from outside of the case. It is normally closed, so that the oxygen must pass through the one and two man control valve, thence to the aneroid control valve, and then through the flow indicator to the masks. If either of these valves fails

to function, by operating the cut-out valve oxygen is permitted to pass directly to the flow indicator and thence to the masks.

Details of the aneroid control valve are shown in figure 6. A stack of five aneroid diaphragms are connected to the lever L′, which in turn is connected to the valve stem W′. As the aneroids expand, the valve stem W′, which is threaded, is rotated by the lever L′ and raised from its seat, permitting oxygen which enters at O′ and passes to the valve seat V″ to flow in amounts depending on the excursion of the aneroids. From the control valve the oxygen passes to the flow indicator chamber immediately above, thence to the mask connections.

On the stem of the shut-off valve a cam K (fig. 5) is provided to operate the lever P, which presses against the piston Y of a small valve, which is opened by the action of the cam when the shut-off valve is set for two passengers, thereby obviating the necessity of using a Y connection in the tubes to the masks, as in the Dreyer apparatus. The flow indicator is of the turbine type. The pointer is dispensed with, and instead an aluminum disk with concentric slots, which appear as concentrated circles upon rotation, is provided.

To prevent moisture and other impurities, which are found in commercial oxygen, from interfering with the action of the apparatus, two filters are provided, one in the passage between the supply tank and the reducing valve and a second in the chamber C′ (fig. 5) between the hand valve and the regulating valve.

The advantages of this apparatus over the Dreyer type are that the aneroid-control valve is less likely to become clogged by particles of dirt or other impurities than is the piston valve of the Dreyer instrument. Moreover, in case the aneroids are punctured there is no danger of the supply of oxygen being cut off, since under these circumstances the valve will remain open. The reducing valve can be regulated without disassembling the apparatus. The by-pass or full-flow valve permits the pilot to receive an adequate supply of oxygen in case the hand valve or aneroid valve ceases to operate. Greater precautions are taken to filter the oxygen and thus remove possible contamination. On the other hand, the apparatus is rather heavy. It weighs 4.6 pounds, which is more than a pound more than the regular Dreyer apparatus. It has more parts than the Dreyer type and the design is complicated.

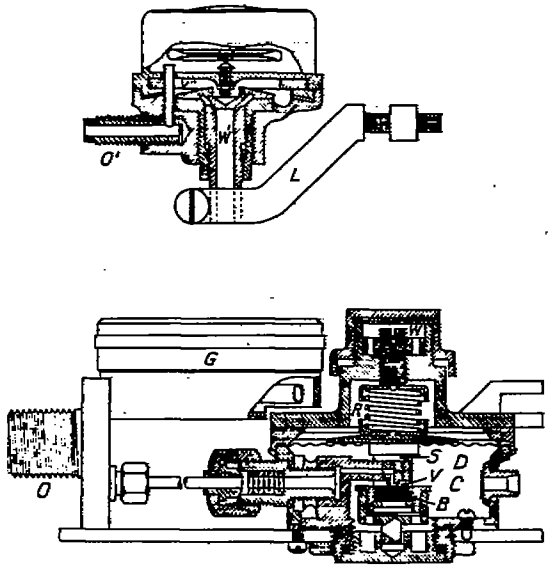

FIG. 6.—Reducing and Control Valves of Clark Oxygen Apparatus.

VAN SICKLEN APPARATUS.

A device of radically different design, invented by Prouty, is shown in figures 7 and 8. Essential features are a high-pressure chamber and reducing valve and a low-pressure chamber and reducing valve, the latter controlled by an aneroid capsule. A pressure gage and flow indicator are also provided. This apparatus differs from the Dreyer in that the required amount of oxygen is obtained by forcing the oxygen through an orifice of constant area by varying the pressure of the oxygen instead of maintaining the driving pressure effectively constant and varying the orifice in the aneroid-control valve, as in the Dreyer type. It is the lightest and most compact of the instruments thus far produced.

Referring to figure 8, the oxygen enters the high-pressure chamber H through the tank connection C. At one end of this chamber is a German-silver diaphragm D, which expands under the pressure of the oxygen, thereby closing the valve V, which is connected by the lever system L to the diaphragm. From the high-pressure chamber the oxygen passes through the

jewel needle valve V′ into the low-pressure chamber P, which is also provided with an aneroid diaphragm D′ and lever system L′ similar to that of the high-pressure side. In addition, an aneroid capsule N, backed by a spring S, presses against the center of the diaphragm D′. As the external atmospheric pressure decreases, the aneroid capsule expands, thereby exerting

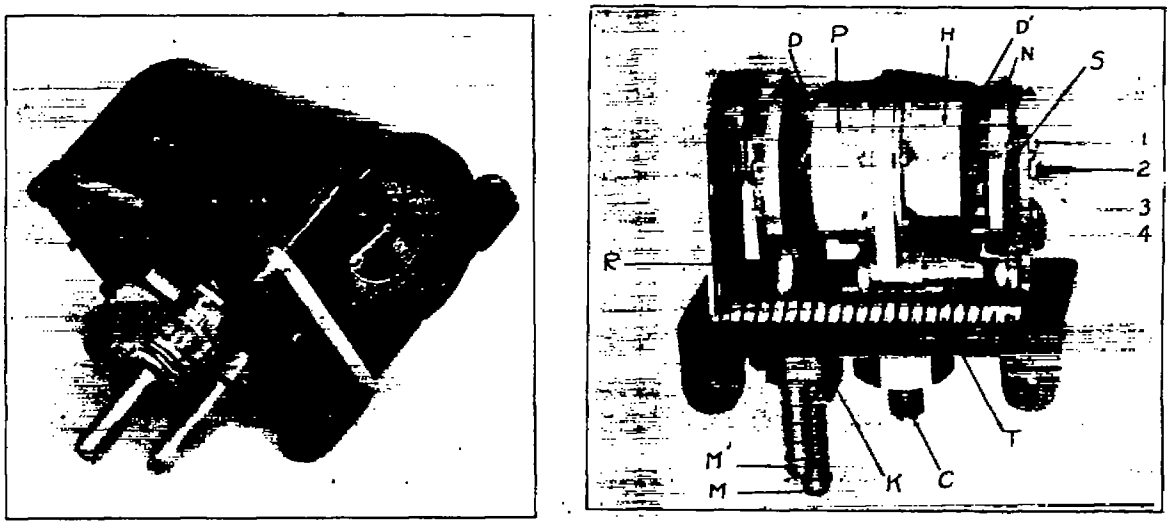

FIG. 7.—Van Sicklen-Prouty Oxygen Apparatus.

pressure through the diaphragm D′ on the lever L′ and regulating the amount of oxygen which enters through the needle valve V′.

The supply at different altitudes is regulated to the correct amount by the contact screws 2, 3, and 4, against which the steel spring S presses as the aneroid expands. Temperature compensation is secured by copper plating the spring on the inside. From the reduced-pressure chamber the oxygen passes to the mask connections M and M′ (fig. 7). In one, M, a shut-off valve K, with knurled ring, is provided to cut off the supply to one mask in case the machine is being operated by one aviator.

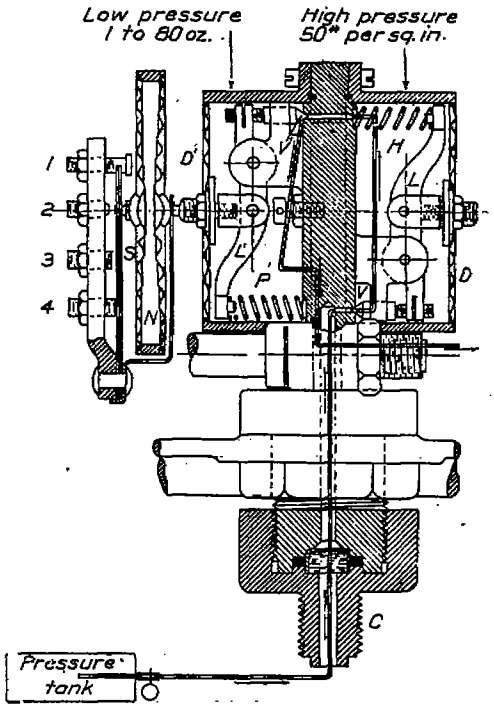

FIG. 8.—Van Sicklen-Prouty Oxygen Apparatus.

The high-pressure gage consists of the helical tube T (fig. 7), connected to the sector R, which in turn operates an indicating pointer. The coil is made to sustain a pressure of 2,500 pounds per square inch. The dial, which is equally spaced, is graduated from 0 to 200 atmospheres and also indicates the per cent of the full supply available. The flow indicator depends for its action on the static pressure of the oxygen developed on the low-pressure side of the apparatus. It consists essentially of a capsule B, one face of which is a sensitive German-silver diaphragm, the expansion of which under the pressure of the oxygen flowing from the apparatus indicates the flow roughly on the dial E through the intermediary action of a suitable lever system. It is essentially a pressure gage. No oxygen flows through the flow indicator. The parts are mounted on an aluminum base and are covered with a thin cast aluminum case provided with glass-covered openings to expose the dials of the pressure gage and flow indicator. The design is remarkably compact. The base is approximately 2 inches wide and 3¾ inches long and the cover is approximately 2⅜ inches high. The weight, exclusive of external connections, is about 1¾ pounds.

This instrument has shown exceptionally satisfactory performance in laboratory tests and under service conditions to the limited extent to which it has been used.

GARSAUX APPARATUS.

An apparatus invented by Dr. Garsaux in France is shown in figure 9 and in detail in figure 10. The essential parts are a reduced-pressure chamber C_2 and an altitude-control device C_1, which operates a needle valve V.

The pressure-control chamber C_2 is divided into two parts by the rubber diaphragm D_1. The upper part communicates with the external atmosphere at A. The lower is connected to the oxygen-supply tank at T. The rubber diaphragm is held in place between the springs S_1 and S_2, of which S_1 is the stronger, and thus exerts an unbalanced pressure on the diaphragm. The oxygen which enters from the supply tank forces the diaphragm upward in opposition to the external pressure above the diaphragm and the unbalanced pressure of the springs S_1 and S_2 until the diaphragm is sufficiently displaced to close the valve T through the action of the lever system L_1. The oxygen in the chamber C_1 is thus maintained at a pressure which decreases with the altitude, but is maintained constantly in excess of the external atmospheric pressure by an amount depending upon the unbalanced pressure exerted on the diaphragm D_1 by the spring S_1, which is adjustable. A safety valve V_1 is provided to prevent the pressure in the chamber C_2 from becoming excessive in case the valve fails to close.

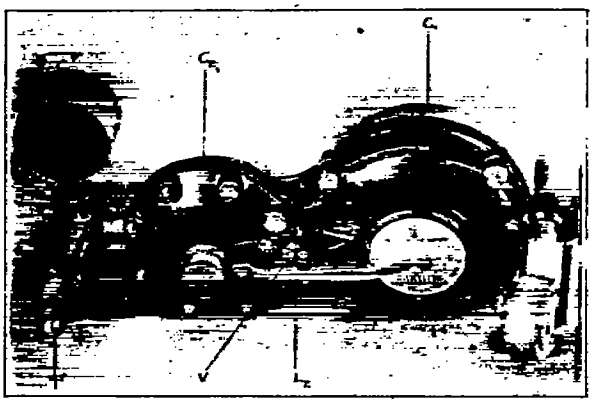

Fig. 9.—Garsaux Oxygen Apparatus.

The altitude control is effected by the expansion with increase of altitude and consequent decrease of pressure and temperature of the gas confined in the receptacle C_1 by the rubber diaphragm D_2, which acts in opposition to the spring S_3, forcing the rod T against the lever L_2 which in turn actuates the needle valve V, located between the outlet of the reduced pressure chamber and the mask connection. The supply of oxygen delivered is regulated by the size and shape of the needle valve in conjunction with the area of the diaphragm surface D_1 and the pressure of the opposing adjustable spring S_1. The pressure within the chamber C_2 is initially adjusted by means of the valve V_1.

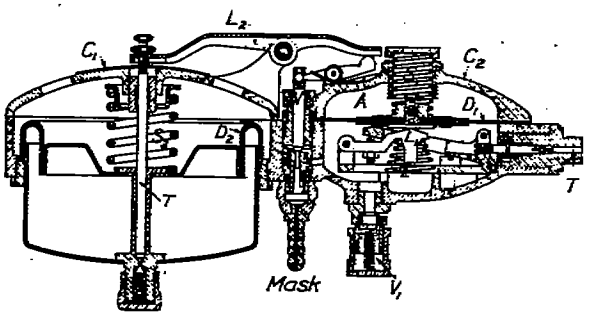

Fig. 10.—Reducing and Control Valves of Garsaux Oxygen Apparatus.

The principal disadvantage of this type of apparatus, aside from the lack of durability of the rubber diaphragms, is the temperature effect resulting from the change in volume of the air confined in the chamber C_1, which regulates the flow. This is in part due to the lag of the temperature of the confined air behind its surroundings and also because of the deviations under the conditions of use from the temperature altitude law of Radau which is assumed in calibrating the instrument.

GARSAUX APPARATUS—MODIFIED TYPE.

A simplified form of Garsaux apparatus is shown in figure 11. The amount of oxygen delivered is controlled by driving the gas under a suitably varying pressure through an orifice of constant size. A single reducing valve P is used. It is operated by the lever system L under the action of the two rubber diaphragms D_1 and D_2, which are situated between two chambers

C_1 and C_2. Chamber C_1 is hermetically sealed and contains air at atmospheric pressure. The diaphragm D_1, which rests against a metal plate, constitutes the upper part of this chamber. It is separated from the diaphragm D_2, to which it is connected by a small chamber C_3, exposed to the external atmospheric pressure through the opening H. The diaphragm D_2 constitutes the lower part of the reduced-pressure chamber C_2, into which the oxygen from the supply tank passes through the needle valve P. The diaphragms act in opposition to the upward motion of a spring. The air in C_1 expands with decrease of external pressure, thereby opening the needle valve and increasing the pressure of the oxygen in the chamber C_2, which in turn increases the amount delivered by the apparatus. From the chamber C_2 the oxygen passes through a suitable opening of constant size to the masks. The amount of oxygen delivered at any two chosen altitudes can be regulated by properly proportioning the area of the diaphragms D_1 and D_2, the stiffness of the spring S, and the size of the outlet orifice. The flow at intervening altitudes is thereby determined. A pressure gage G is provided to indicate the pressure in the supply tank. The pressure of the air in the hermetically sealed chamber C_1

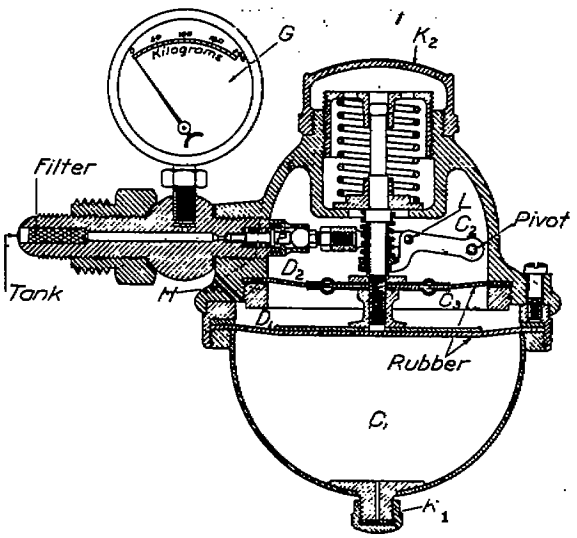

FIG. 11.—Garsaux Oxygen Apparatus, Improved Type.

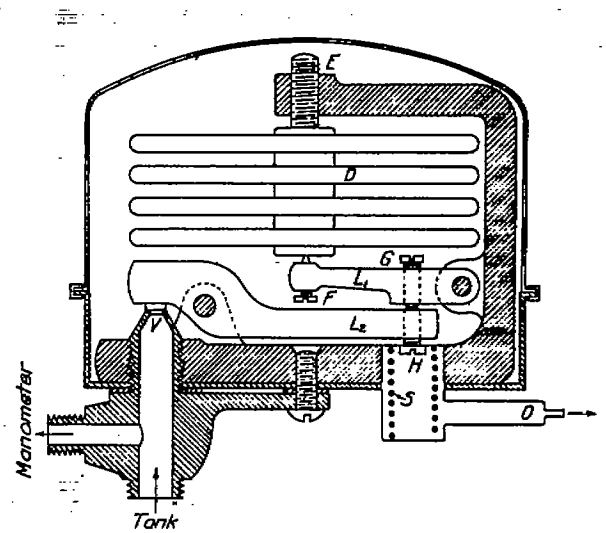

FIG. 12.—Gourdon Oxygen Apparatus.

may be regulated through the capped opening K_1. The adjustment of the diaphragms may be changed by removing the cap K_2.

GOURDOU APPARATUS.

Efforts have also been made to obtain a simple form of apparatus by allowing the oxygen to flow from a chamber at constant pressure through a suitable small orifice directly to the masks and depending on the decrease of the atmospheric pressure with increase of altitude to provide the necessary difference in pressure to force the required amount of oxygen through the orifice. If the pressure in the regulator is P_1, the external presure P_2, the quantity Q delivered will be given by the expression $Q = K(P_1 - P_2)$, where K is a constant depending on the dimensions of the orifice. Hence the ratio of the amount delivered at two altitudes will be given by the expression

$$\frac{Q_2}{Q_1} = \frac{P_0 - P_2}{P_0 - P_1}$$

from which, knowing the desired ratio of flow $\frac{Q_2}{Q_1}$ and the pressures P_2 and P_1 at the corresponding altitudes the pressure P_0 at which flow of oxygen begins is defined. An apparatus of this type (shown in figure 12) has been suggested by Capt. Gourdou. Oxygen from the supply tank enters the chamber C through the valve V and passes from this chamber through the orifice O to the masks. The pressure in the chamber is regulated by the expansion and con-

traction of the aneroid diaphragms D, which are connected to the lever system L_1 L_2, which opens and closes the valve V. A spring is provided to insure the closing of the valves when the aneroids are not sufficiently contracted to do so. The pressure of the oxygen in the chambers is regulated by the adjustment screws E, F, G, and H. The delivery curves are roughly parabolic. A limitation of both this and the previous apparatus is that the delivery can be exactly defined at two altitudes only, the assumption being made that at other points the delivery curve will not deviate from the theoretically correct amount enough to appreciably affect the aviator's breathing.

GIBBS APPARATUS.

An apparatus invented by W. E. Gibbs, formerly of the United States Bureau of Mines, is shown in figures 13 and 14. This model is made to supply one person. The distinguishing

FIG. 13.—Gibbs Oxygen Apparatus.

characteristics of this apparatus are that the pressure is reduced in two stages before entering the aneroid-control valve and that a valve is provided near the mask connection, which permits oxygen to flow only when the aviator is inhaling. The pressure in the supply tank is indicated by a Bourdon gage of the usual type.

Referring to figure 14, oxygen from the supply tank enters the high-pressure reducing chamber C, the inlet of which is controlled by a valve operated by the multiple cell bronze "sylphon" valve S. As the oxygen enters the first reducing chamber and the sylphon valve S, the latter expands, thereby closing the inlet valve to the oxygen supply. The pressure is in this manner maintained in the first reducing chamber at approximately 1.5 pounds per square inch in excess of atmospheric pressure. From the first reducing chamber the oxygen passes into the second chamber C′, which is provided with a bellows B, controlled by the spring T, thereby automatically maintaining the pressure in the chamber at approximately 1 inch of water in excess of atmospheric pressure through the action of the valve V, which is operated by the bellows.

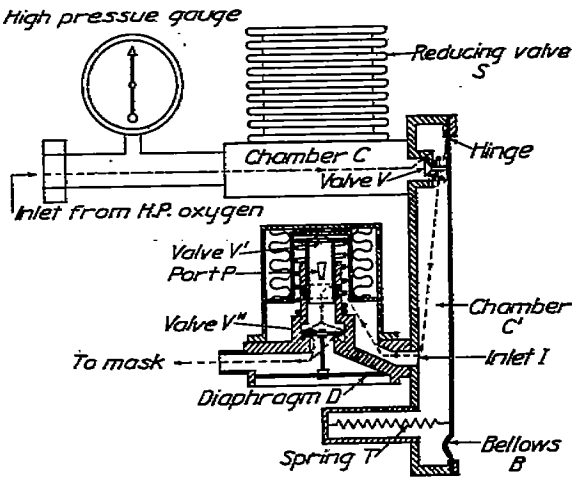

FIG. 14.—Gibbs Oxygen Apparatus.

From the second pressure chamber the oxygen passes through the inlet I to the aneroid-control valve V′, also of the multiple-cell bronze sylphon type. The air has been exhausted from this sylphon and as the external pressure decreases it expands, thereby opening the port P and permitting oxygen to pass in predetermined amount depending upon the altitude. From the aneroid-control valve the oxygen passes through the valve V″ to the mask. This valve is opened

and closed by the motion of the diaphragm D, which expands and contracts under the slight increase and decrease of pressure resulting from the aviators breathing. In its normal condition this valve is closed. The slight decrease of pressure, due to the aviator's inhaling, is required to open it and allow the oxygen to flow.

This apparatus is inclosed in an aluminum case $3\frac{1}{2}$ by $3\frac{3}{4}$ by $5\frac{3}{8}$ inches and weighs approximately 6 pounds 6 ounces. It has not been extensively used in practice. Effort is required by the aviator to operate the valve which permits the oxygen to flow only during inhalation. Although this effort is slight, it is noticeable, and it is important that the aviator experience not even the slightest sensation of obstruction or added effort in breathing. A later model of this apparatus, which is made to supply two aviators, more nearly resembles the Dreyer type. The valve operated by the breathing of the aviator has been eliminated. A hand-control or shut-off valve, similar to that used in the Dreyer apparatus, has been added to adjust the supply for one or two aviators. A flow indicator has also been added. Outside dimensions of the apparatus are approximately 7 inches square and 3 inches high; weight about 4 pounds.

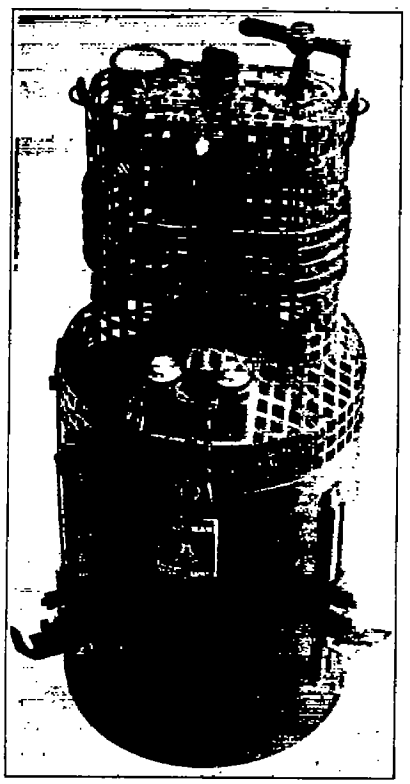

FIG. 15.—German Liquid Oxygen Apparatus.

CONTROL APPARATUS - LIQUID-OXYGEN TYPE.

The apparatus thus far considered have been designed to use compressed oxygen. It is also possible to carry a supply of oxygen in liquid form and to regulate the amount evaporated according to the needs of the aviator. The apparatus required has the advantage that it is considerably lighter and more compact than the complete equipment necessary when compressed oxygen is used. On the other hand, there is an inevitable loss of gas due to evaporation with the liquid type when the gas is not actually being used. It is therefore desirable that the apparatus be filled when about to be used and that the liquefying plant be reasonably near the base of operations. The liquid-oxygen type of apparatus is especially useful for long flights, since a large amount of oxygen can be carried with comparatively small volume and weight.

GERMAN TYPE.

An apparatus for liquid oxygen which has been extensively used by the Germans is shown in figures 15 and 16. The supply of liquid gas is contained in the double-walled spherical copper vacuum bottle B. Connected to the bottle is the tube T, in which the oxygen which evaporates is confined. A pressure gage P and a safety valve S are attached to this tube. The pressure developed in the tube T forces liquid oxygen up through the tube t and out through a system of coiled tubes and evaporation chambers, C_1 C_2 C_3 C_4 to the needle valve N, thence to the breathing bag R (not used in the model shown in fig. 15) and to the masks. The safety valve S prevents the pressure in the tube T, due to the constant evaporation of the liquid oxygen, from becoming excessively great in case oxygen is not being delivered. The amount of oxygen delivered by the apparatus depends upon the rate at which liquid oxygen passes through the system of coils and evaporating chambers. This is determined by adjusting the needle valve N. The heat required to evaporate the gas is absorbed from the surrounding atmosphere, which is practicable since the temperature of the latter is always far above that of the liquid oxygen (−185° C.). In the evacuated space between the two walls of the container B, on the underside of the inner wall, a layer of charcoal is provided, which is held in place by paper and metal gauze. This serves to absorb small amounts of gas which may leak into the evacuated

space. A stopper is used to insert in one of the mask connections $M M_1$ when one aviator only is to be supplied. The amount of oxygen delivered by this apparatus at different altitudes for one and two passengers is shown in figure 17. These curves refer to a surrounding temperature of 0° C. They indicate that the supply actually decreases above 4,000 meters when one person is being supplied and continually throughout the range of altitude when adjusted for two persons. This is in part because the amount of heat absorbed from the atmosphere, due to its decrease of density with increasing altitude, falls off more rapidly than the lowering of the boiling point of the liquid oxygen owing to the decreased external pressure. Moreover, the temperature at high altitudes is usually below 0° C., and the supply would therefore in general be even less than that indicated by the curves. However, the amount delivered is still more than enough for the aviator's needs. The weight of the apparatus just described when empty is $3\frac{8}{10}$ kilograms. It has a capacity of 2,000 cubic centimeters of liquid oxygen.

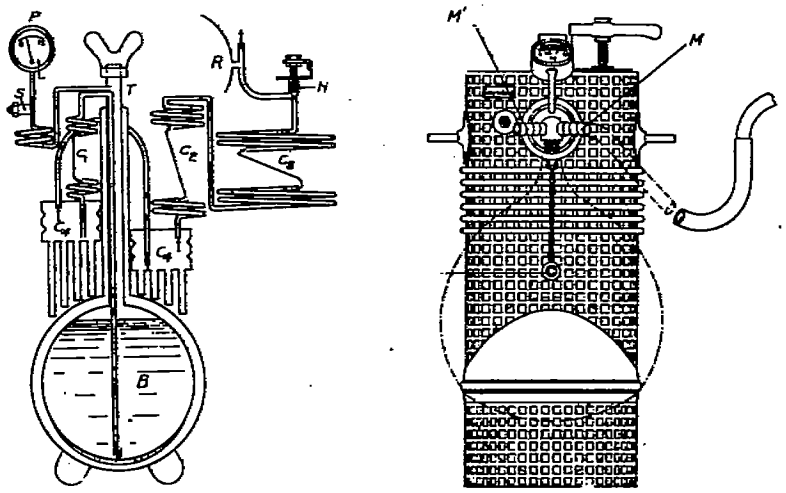

FIG. 16.—Details German Liquid Oxygen Apparatus.

To reduce the loss of gas through evaporation when the instrument is not in use, experiments have been conducted in France and England with metal containers of stamped metal silvered or galvanized and also with double-wall glass bottles. It has been found that glass bottles with a capacity of one liter of liquid oxygen, which corresponds to approximately 900 liters of gas, lose through evaporation only 12 liters per hour at 15° C. Reasonable care must be taken, however, in filling glass bottles that the temperature is lowered gradually before the liquid oxygen comes in contact with the glass; otherwise they are likely to crack. This difficulty could be avoided by using vessels of fuzed quartz.

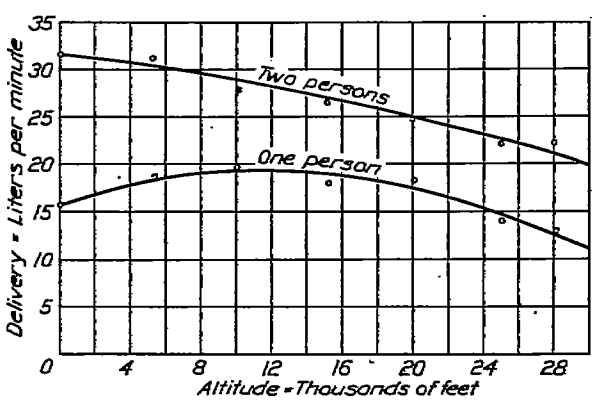

FIG. 17.—Altitude Delivery Curves for German Oxygen Apparatus, Liquid Oxygen Type.

BRITISH TYPE.

An apparatus of British manufacture similar to the German apparatus just described is shown in figure 18. The container consists of two spun-metal cylindrical vessels, one within the other, with an exhausted space between and polished surfaces facing the evacuated space to reduce radiation. There is an indentation in the lower part of the inner vessel for a charcoal pocket, which is covered by metal gauze to hold the charcoal in place.

The apparatus is made in two sizes, which have a capacity of $2\frac{3}{4}$ and $4\frac{1}{2}$ liters of liquid oxygen, corresponding, respectively, to approximately, 2,500 and 4,000 liters of oxygen gas. The container of the small model is spherical; that of the larger is elongated and rounded at the top and bottom. The arrangements for evaporating the liquid oxygen and controlling the delivery are mounted around the neck of the container. Evaporation is caused by absorption

of heat from the surrounding atmosphere. The pressure of the evaporated gas which is confined above the liquid is measured by a pressure gage D, which is connected to the inner neck. A spiral coil of ¼-inch copper tubing A forms part of the gage connection. Beyond the gage and connected to it is a safety valve V, which can be adjusted to regulate the pressure at which the oxygen blows off. That which escapes from the valve is led to the main gas-delivery outlets. The coil A prevents oxygen from reaching the gage in liquid form and warms it before it passes through the safety valve into the main delivery pipe. The main supply of oxygen is delivered through the coil C. The pressure of the evaporated oxygen above the liquid forces the liquid up a siphon tube which reaches to the bottom of the inner vessel. When the liquid has reached the top of the siphon it continues to flow under the combined action of the gas pressure and the siphon. From the siphon tube the liquid passes into the annular boiler B, provided with ventilating tubes to increase the radiating surface. The liquid is evaporated here, and the gas produced passes through a third coil around the neck to the regulating valve R, which controls the rate of delivery. At this point two delivery tubes are provided, which connect to the flow indicators and thence to the breathing masks.

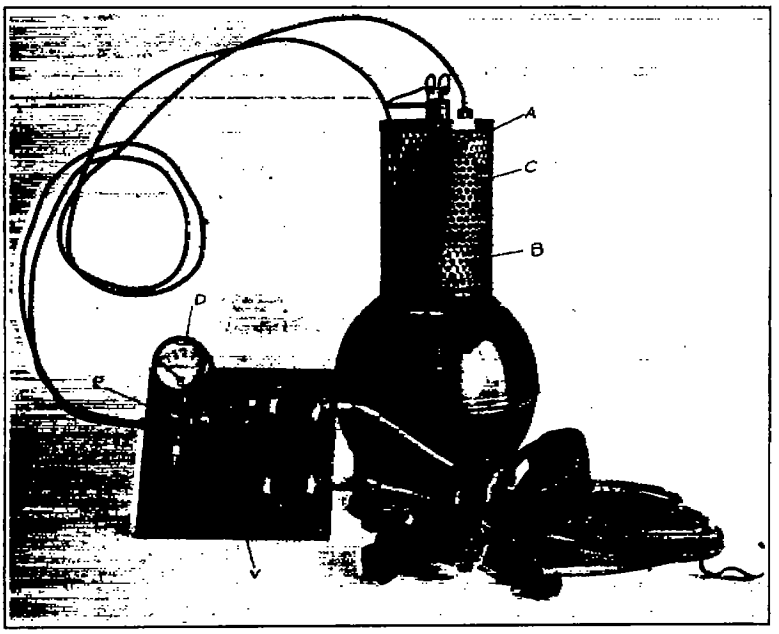

FIG. 18.—British Liquid Oxygen Apparatus.

A disadvantage of these types of apparatus, aside from the inevitable loss of oxygen due to evaporation and the inadequate control of the gas delivered, is that in case the apparatus is inverted the rate of delivery can not be controlled. The French claim that the charcoal in the evacuated space between the walls of the bottle is likely to be ignited by the oxygen in case an incendiary bullet strikes the apparatus. This is denied by the British.

FRENCH TYPE.

To overcome these difficulties and provide more satisfactory control of the amount of gas delivered, the French have proposed to make a device which utilizes a double-walled glass vessel to hold the liquid oxygen. In the latter is a quartz tube, which incloses at its lower end a tungsten-filament lamp. The amount of current supplied to this lamp, and consequently the amount of heat delivered and oxygen evaporated, depends upon a variable resistance, which is automatically regulated according to the altitude by a barometric control device. The vessel is partially filled with glass wool to prevent the oxygen from flowing suddenly in large excess from the apparatus in case it is inverted. The capacity of the container is thereby decreased about one-fifth. A small vent tube, communicating with the external atmosphere, is provided to prevent the pressure in the bottle due to evaporation from becoming excessive. The pressure thus never exceeds 25 pounds per square inch even when the lamp is at its highest temperature.

PERFORMANCE REQUIREMENTS AND SPECIFICATIONS.

Oxygen-control apparatus has been found difficult to manufacture owing to its complexity and delicacy of the adjustments required. It is essential that the apparatus be of durable construction, reliable in operation, and as light as is consistent with durability and reliability. It must not be affected appreciably in its performance by the wide fluctuations in temperature to which it will be subject in use. The vibrations of the airplane must not affect its operation, and it must be insensitive to such positional changes as will be experienced in maneuvering the airplane. The amount of oxygen delivered at all altitudes must always be at least sufficient for the aviator's requirements, and it is important that the required amount be not greatly exceeded for the sake of economy.

To fulfill these requirements it is essential that construction and performance specifications be formulated and that altitude-delivery curves with tolerances which define the allowable variation in flow at different altitudes be provided. Detailed working drawings with dimensions and tolerances are necessary. The material should be of the best quality throughout and free from defects. The workmanship should be of the highest grade in view of the delicate adjustments required. It is highly desirable that a large degree of interchangeability of parts be provided. Gages, indicators, aneroids, reducing valves, unit castings, cases, tubes, screws, and connections should be interchangeable with like parts of other instruments of the same make and type.

Material and workmanship should be carefully inspected during manufacture. This should include an inspection of individual parts and performance tests on assembled parts and on the complete instrument in accordance with adequate performance specifications. Samples of new instruments should be submitted. The right of rejection of parts and of the complete instrument should be provided.

LABORATORY TESTS.

TESTING APPARATUS.

Oxygen-control apparatus under the conditions of use is subjected to variable reduced pressures which may be as low as one-third of an atmosphere at the highest altitudes attained. It may also be simultaneously subjected to temperatures as low as $-50°$ C. The oxygen is discharged against the reduced pressure of the surrounding atmosphere.

In order that the laboratory tests may be carried out under circumstances similar to those obtaining in actual use, it is essential that the above-mentioned pressure and temperature conditions be fulfilled. This has been done at the Bureau of Standards by placing the apparatus to be tested under a bell jar, and exhausting the air from the bell jar until the pressure is as low as that at the highest altitudes at which the apparatus is designed to function (33,000 feet). Connection to an oxygen-supply tank is made through suitable connections in the metallic base on which the bell jar rests. The bell jar is simultaneously cooled by refrigeration for the low-temperature tests.

The pressure is determined by connecting a mercury barometer to the bell jar. As the air in the bell jar is exhausted the aneroid-control valve of the apparatus opens and allows oxygen to flow through the apparatus into the bell jar. It is desirable, therefore, that the pump have sufficient capacity to exhaust the bell jar with the oxygen flowing at its maximum rate (5 liters per minute)—otherwise the oxygen must be shut off at the tank while the bell jar is being exhausted. When the pressure has been reduced to the required minimum, the pump is cut off from the bell jar. The oxygen continues to flow, however, thereby increasing the pressure in the bell jar and causing the mercury in the attached barometer to fall. As the oxygen continues to flow and the pressure in the bell jar continually increases, the aneroid-valve gradually closes until the oxygen is again completely cut off as the pressure in the bell jar again approaches atmospheric pressure. The rate of delivery of oxygen can be found while the oxygen is flowing into the bell jar if the volume of the bell jar is known, and the rate at which the mercury column of the barometer falls is determined at a series of points along the scale.

The apparatus[2] used at the Bureau of Standards is shown in figures 19 and schematically in figure 20. Referring to figures 19 and 20, at the left is the bell jar B, of approximately 30 liters capacity, resting upon a heavy cast-iron plate through which the connections to the oxygen tank T, the pump P, and the manometer C are made. In the figure three oxygen tank connections are shown. This is so that three apparatus can be connected simultaneously under the bell jar and tested successively, thereby avoiding the necessity of removing the bell jar between tests and breaking the seal.

The bell jar rests upon a rubber gasket fastened to the base plate with shellac. Glycerine is used to insure an air-tight connection between the bell jar and the gasket. The mercury manometer M, which is connected to the bell jar, is of the closed cistern type, designed to read at low pressures. The scale is graduated on the left in millimeters, and on the right are the corresponding altitudes in feet. This barometer has the advantage over an open manometer

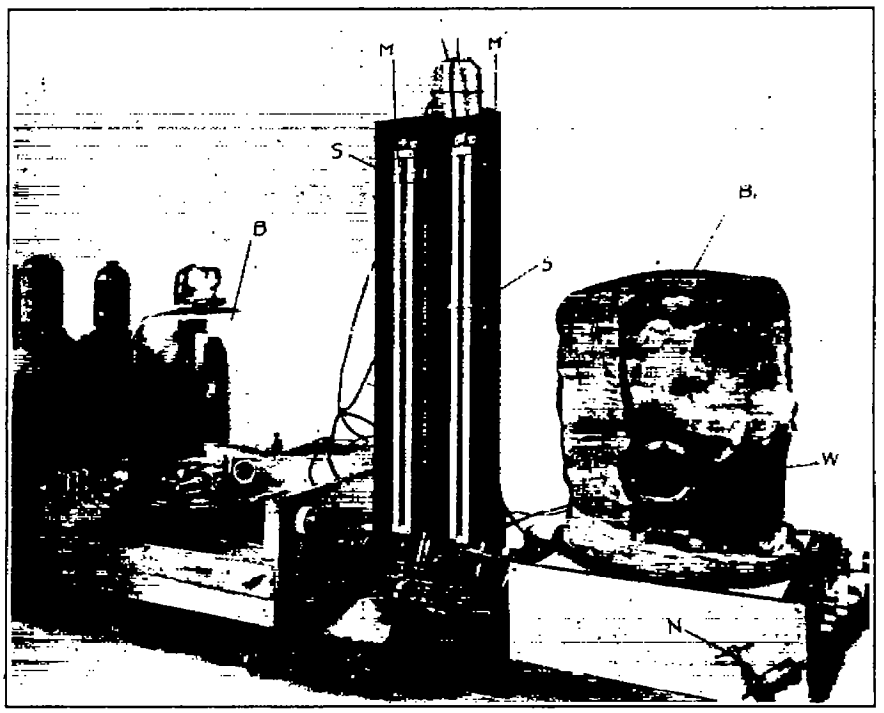

FIG. 19.—Bureau of Standards Oxygen Apparatus Testing Equipment.

that it indicates the absolute pressure in the bell jar irrespective of the fluctuation in the external atmospheric pressure. The slider S (fig. 19), which can be moved throughout the range of the scale, is provided with two horizontal knife-edges, which are in front of and close to the manometer tube and exactly two centimeters apart. The rate at which the pressure in the bell jar is increasing is found by determining with a stop watch the time required for the top of the mercury column to fall from the upper to the lower knife edge.

The barometer M′ at the right, which is identical with the barometer just described, is connected to the bell jar B′, in which the temperature tests are carried out. This bell jar consists of a dome of welded sheet steel provided with a cast-steel rim. It is heavily lagged with felt and has a plate-glass window W (fig. 19) for observations. The dome rests upon a base like that under the glass bell jar, and, as in the other case, a rubber gasket is provided and glycerine is used as a seal. It was found that vaseline and tallow solidified at the low temperatures used and afterwards on removing the dome loosened the gasket from the base. The dome is connected to the manometer and exhaust pump at C′ and P′. To obtain the low temperatures required, a

[2] Designed and constructed under the direction of Mr. L. A. Hoffman of the Aeronautic Instruments Section, Bureau of Standards.

carbon-dioxide refrigerating system is employed. This includes an expansion coil X (fig. 20), an interchanger I, and a precooler O with connections as shown. Carbon dioxide enters from the compressor at A, passes through the precooler O, thence to the interchanger I, thence to the needle valve N, where expansion takes place, then directly to the expansion coil X, thence to the return coil of the interchanger, and back to the compressor. The precooler consists of a coil of copper pressure tubing surrounded by an ice-salt freezing mixture. The interchanger is made of a double coil of copper pressure tubing. The expansion coil, which is also of heavy copper tubing, has a radiating surface of approximately 100 square inches. A small motor-driven fan F is used to secure a uniform temperature inside of the dome, and an electric light L is provided for illumination and for temperature regulation. Current for the motor and electric lamp enters through insulated binding posts in the metal base. Control switches are provided. A toluene or pentane thermometer is used to indicate temperature. The manometer, pump, and oxygen-supply connections are shown diagrammatically at the left in figure 20. The stop cocks S_1 S_2 S_3 S_4 are to cut off one or both bell jars from the pump and the oxygen supply. With this device no difficulty is encountered in maintaining continuously temperatures between −30° C. and −40° C.

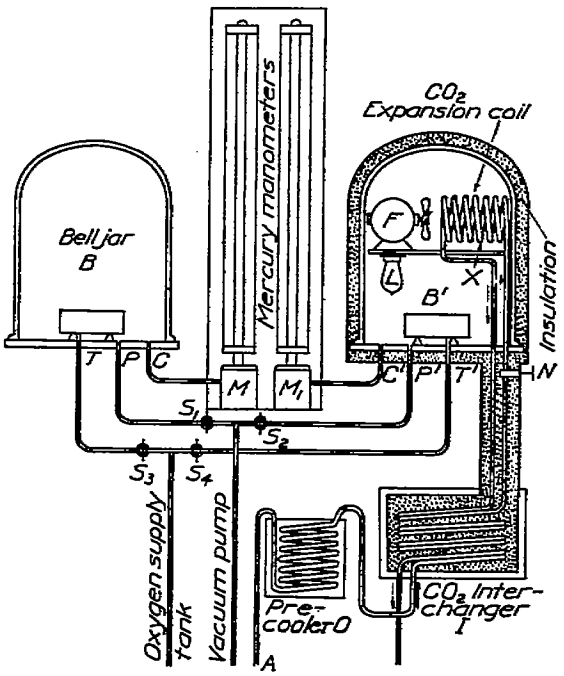

FIG. 20.—Testing Apparatus for Oxygen Control Apparatus.

PROCEDURE FOR TESTS.

After an initial inspection for obvious mechanical defects, the instrument to be tested is placed on the bell-jar base, connected to the oxygen supply, and all valves, connections and tubes tested for leaks with a smoldering wick. The oxygen is then cut off, the hand valve for one or two passengers adjusted, and the bell jar placed over the apparatus. The supply-tank pressure and the temperature of the barometer is recorded, the bell jar then exhausted to an absolute pressure of approximately 65 centimeters, the pump cut-off, and the mercury column observed to detect leaks around the base of the bell jar. The oxygen is next turned on, the pump connected, and the pressure noted when the turbine-flow indicator starts to rotate (this should not be less than 63 centimeters). The bell jar is exhausted to approximately 15 centimeters absolute, the pump cut off, and the center of the barometer slider set at 25 centimeters. Since oxygen is flowing through the apparatus into the bell jar, the barometer falls. When the meniscus reaches the upper knife-edge of the slider, the stop watch is started and stopped when it reaches the lower knife-edge. The time is recorded to the nearest fifth of a second and the mean barometric reading at the two knife-edges (25 centimeters), the slider is raised from 5 to 10 centimeters, and the time observations repeated for other 2-centimeter intervals up to approximately 70 centimeters pressure or until the oxygen ceases to flow. The pressure when the flow indicator stops is observed, then the bell jar is again exhausted to approximately 15 centimeters, and a check run made.

If both room and low temperature tests for the effect of low-tank pressure are to be made, they should be carried out without resetting the one and two passenger valve, since slight changes in setting make an appreciable difference in the amount of oxygen delivered. The one and two passenger valve may be tested for leaks by setting it at "off" while connected to the supply tank and noting if the manometer remains constant after the pressure in the bell jar has been reduced to approximately 15 centimeters.

CALCULATIONS.

The altitude corresponding to the mean pressure of the several 2-centimeter intervals may be found from pressure-altitude tables prepared by the Bureau of Standards. The capacity of the bell jar must be known, also the displacment of the oxygen-control apparatus (approximately 330 cubic centimeters for the Dreyer), and the temperature of the air in the bell jar. The rate of flow of oxygen through the control apparatus in liters per minute in terms of the effective volume, V, of the bell jar (capacity minus volume of apparatus under test), the absolute temperature, T, of the gas in the bell jar (centigrade temperature plus 273), and the time in seconds, t, for the pressure in the bell jar to change two centimeters may be found by the following formula:

$$\text{Liters/min.} = \frac{463\ V}{Tt}$$

If T does not differ appreciably from 293° absolute (20° C.) the expression becomes:

$$\text{Liters/min.} = \frac{1.58\ V}{t}$$

Derivation of formulas:

Let V be the effective volume of the bell jar in liters (capacity − volume of apparatus under test).

P_1, pressure in centimeters of mercury when stop watch started.

P_2, pressure in centimeters of mercury when stop watch stopped.

T, absolute temperature of gas in bell jar (centigrade + 273).

t, time in seconds for pressure to change 2 centimeters.

V_1, volume of gas in jar when stop watch started, reduced to pressure of 76 centimeters and temperature 20° C.

V_2, volume of gas in bell jar when stop watch stopped, reduced to pressure of 76 centimeters and temperature 20° C.

K_1 and K_2, constants.

Then by the gas law

$$P_1 V = K_1 T \qquad (1)$$

$$P_2 V = K_2 T \qquad (2)$$

Reducing to a pressure of 76 centimeters and temperature 20° C. (293° absolute) and substituting from (1) and (2).

$$V_1 = \frac{(293)\ P_1 V}{(76)\ T} \qquad (3)$$

$$V_2 = \frac{(293)\ P_2 V}{(76)\ T} \qquad (4)$$

Substracting (3) from (4), dividing by $\frac{t}{60}$, and remembering that in the experiment $P_2 - P_1$ is always 2 centimeters.

$$\text{Liters/min.} = \frac{60(V_2 - V_1)}{t} = \frac{(2)(60)(293)\ V}{(76)\ Tt} \qquad (5)$$

$$= \frac{463\ V}{tT}$$

If $T = 293$

$$\text{Liters/min.} = \frac{(2)(60)\ V}{(76)t} \quad \frac{1.58\ V}{t}$$

THE RESULTS OF TESTS.

The results of tests by the Bureau of Standards on representative instruments of the American-made Dreyer, the Clark, and the Prouty types and tests on the single available specimens of the French Dreyer, Munerelle, Garsaux, and the Gibbs instruments are shown graphically in figures 21–28, inclusive. Tests were carried out in conformity with the procedure described in the preceding section. Rates of delivery of oxygen by the apparatus when subjected to external pressures corresponding to altitudes up to 30,000 feet are given. The tank pressures indicated in parenthesis in the legends on the plots are in pounds per square inch or kilograms per square centimeter. The altitudes were computed from the pressure in the bell jar in accordance with pressure-altitude tables prepared by the Bureau of Standards.[3] The rates of delivery are given in liters/min. (reduced to 20° C. and 760 millimeters pressure) at the temperatures, tank pressures, and passenger adjustments indicated by the legends. The correct deliveries for one and two passengers are those prescribed by the United States Bureau of Aircraft Production specifications. For one passenger they are computed from the relation $V=4\left(1-\frac{P}{760}\right)$ where V is the delivery in liters/min. and P is the atmospheric pressure in millimeters of mercury. The amount for two passengers is only 60 per cent greater than that for one passenger at corresponding altitudes. This is because it is assumed that both aviators are in general not likely to inhale simultaneously. Duplicate runs were made in most cases to indicate the degree of reproducibility of performance.

The effect of temperature is indicated by a comparison of the curves at room temperature and at low temperature. On the average the instruments were found to deliver approximately 20 per cent less at −30° C. than at room temperature.

The effect of low-tank pressure is shown by comparing the room-temperature observations at high and low-tank pressure. This in general caused a decrease of delivery of approximately 15 per cent when the tank pressure was reduced to 100 pounds per square inch.

The static pressure on the low-pressure side of the reducing valve of the Dreyer-type instruments was measured when no oxygen was flowing by the use of a Bourdon pressure gage as a test of the adjustment of the reducing valve. This pressure varied from 4 pounds per square inch to 12 pounds per square inch in excess of atmospheric pressure. On the average it was 8 pounds per square inch.

The sensitiveness of the flow indicator of instruments of the Dreyer type was found in terms of the altitude at which the indicator started to revolve with decrease of pressure (ascent) and stopped revolving on increase of pressure (descent). On the average the indicator started at 5,000 feet and stopped at 3,000 feet.

Tests for leaks were made with a smoldering wick.

It will be noted that the two-passenger adjustment of the Dreyer-type instruments conforms much more nearly to the correct flow than the adjustment for one passenger. This is because the groove in the aneroid piston valve was cut to give correct delivery for two passengers. Under these circumstances the delivery for one passenger is larger than is necessary at low altitudes. This does not harm the aviator, but wastes a little oxygen. In the Van Sicklen type of instrument as the plot shows, this difficulty is not encountered, since the delivery is controlled by regulating the pressure of the oxygen in the reducing chamber instead of varying the size of the delivery orifice, as is done in the Dreyer type by the action of the groove in the aneroid valve. The results on the Garsaux instrument indicate that the valve was poorly adjusted. At approximately 10,000 feet it opened suddenly to the maximum rate of delivery. There was actually a slight decrease in delivery above 15,000 feet. The results at −40° C. show that the cut-off valve failed to function. The curves obtained for the Gibbs instrument also show a decrease in delivery above 20,000 feet. This is due to faulty adjustment of the ports of the delivery valve. It will be also noted that in this case the delivery at low temperatures was practically the same as that at room temperature, actually slightly greater at −29° C.

[3] Bureau of Standards Aeronautic Instruments Circular No. 3.

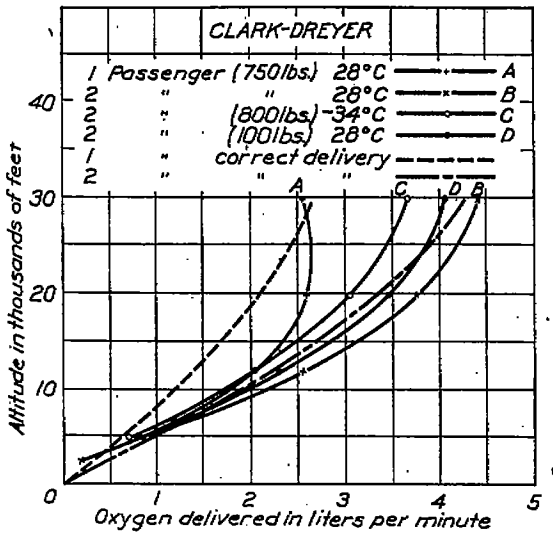

FIG. 21.—Clark-Dreyer Type.

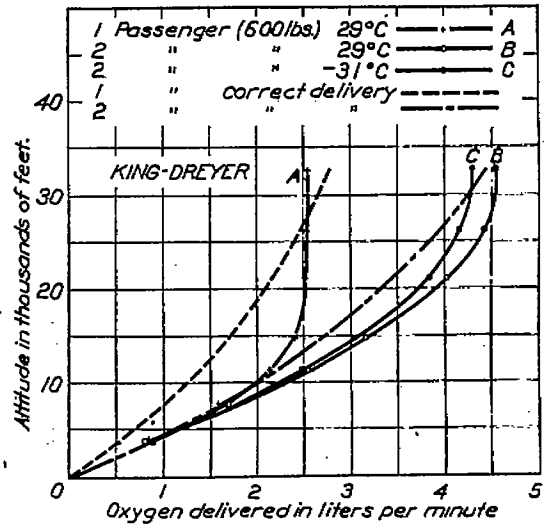

FIG. 22.—King-Dreyer Type.

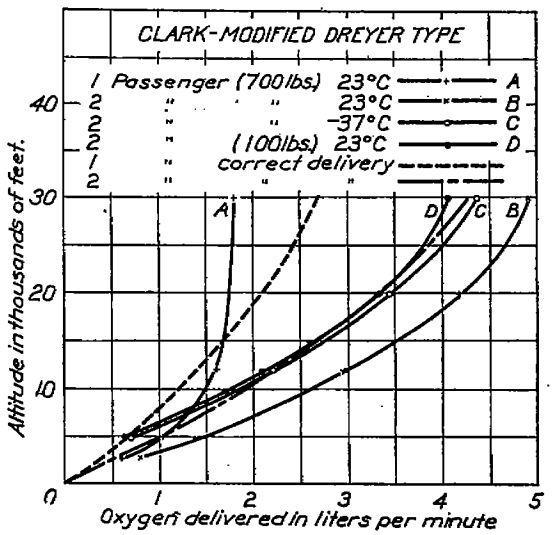

FIG. 23.—Clark modified Dreyer Type.

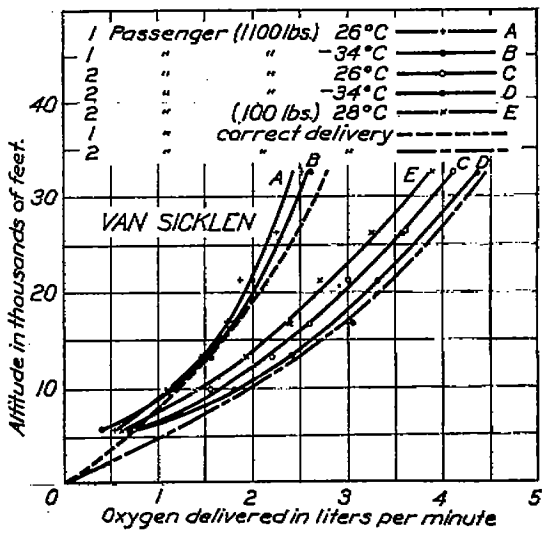

FIG. 24.—Van Sicklen Type.

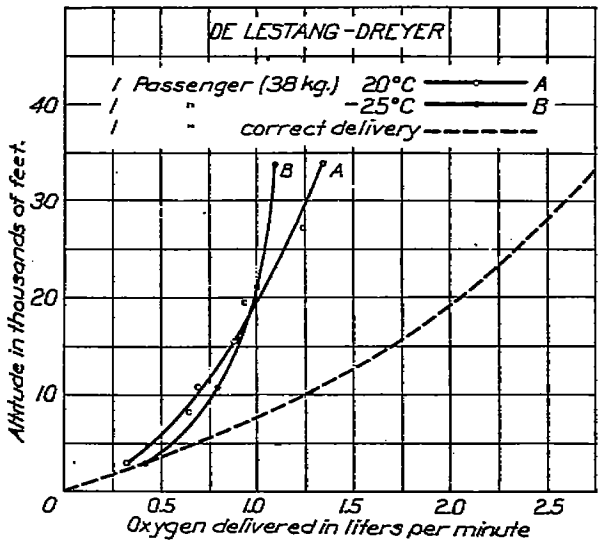

FIG. 25.—De Lestang-Dreyer Type

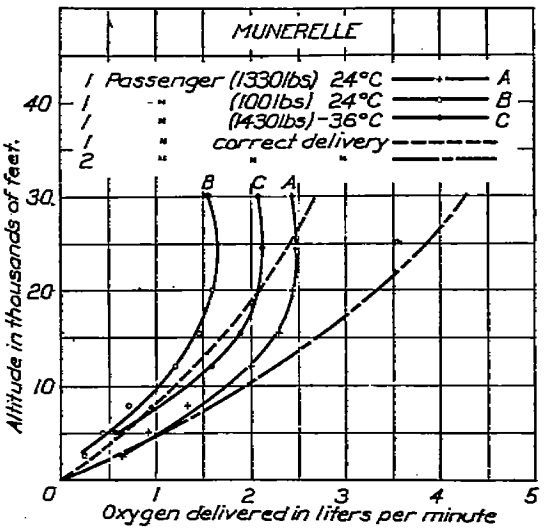

FIG. 26.—Munerelle Type.

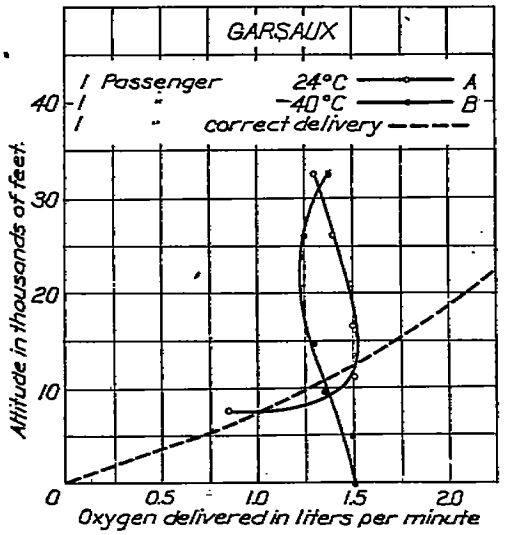

FIG. 27.—Garsaux Type.

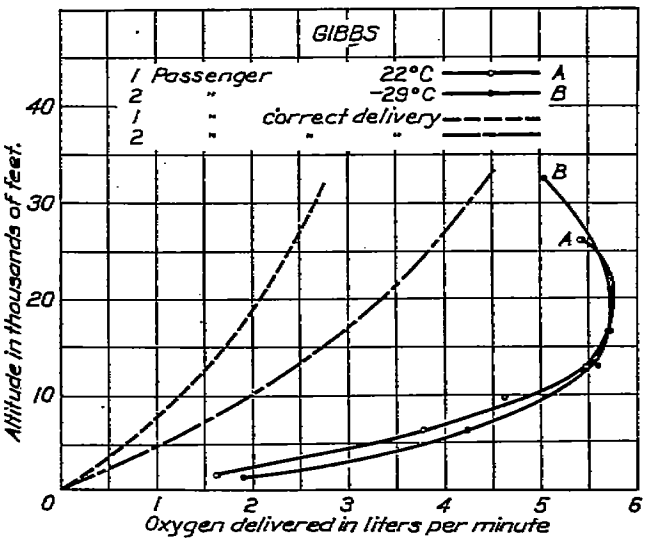

FIG. 28.—Gibbs Type.