REPORT No. 143

ANALYSIS OF STRESSES IN GERMAN AIRPLANES

By WILHELM HOFF

REPORT No. 143.

ANALYSIS OF STRESSES IN GERMAN AIRPLANES.

By Wilhelm Hoff.[1]

I. INTRODUCTION.

Airplanes were built long before the formulas of physics applying to contrivances heavier than air were known. New methods, not adopted by and unknown to other technical lines, were followed. The first inventors of airplanes thought it advisable to select materials that would best conform to the characteristics of birds' wings. Feathers, bamboo rods, specially suitable and carefully selected timbers, high-grade steel, aluminum, and other metals were used. They were either connected to each other with glue, wire solder, or by welding, etc. The structure thus obtained was tested and altered until a satisfactory result was secured.

As the first designers lacked the necessary technical training in handling the new problems, errors and consequent failures were inevitable. This status changed, however, as soon as technically trained men, knowing from experience the importance of logical and methodical development, took up the new line and applied their knowledge to the designing of airplanes.

But there did not exist basic rules for determining the strength of airplanes, and they had to use, therefore, methods in calculations which would give results that would put the structure at least on the safe side.

For this reason the strength of the airplane was, in the beginning, either just sufficient or exceedingly high, depending upon the designer's intuition or his careful mathematical calculations.

This pioneer era in aircraft lasted in Germany until 1912. In that year the national aircraft appropriation (nationale Flugspende) supported by the general enthusiasm of the people, offered valuable prizes for record flights of every description. Contests were arranged, and the results achieved far exceeded those ever before known or expected. In the same year the German military government for the first time placed larger orders for airplanes. As a consequence, new airplane factories were built or existing ones enlarged in order to supply the ever-growing demand for airplanes. The scientific organization united April 3, 1912, in the "Wissenschaftliche Gesellschaft für Flugtechnik" which later on changed its name to "Wissenschaftliche Gesellschaft für Luftfahrt" (WGL). In 1908 the "Modellversuchsanstalt für Aerodynamic," headed by Prof. Dr. L. Prandtl, was founded in Göttingen by the "Motorluftschiffstudiengesellschaft." It is now called "Aerodynamische Versuchsanstalt" (AeVA). Toward the end of 1912 another testing institution was founded under the name of "Deutsche Versuchsanstalt für Luftfahrt" in Adlershof (DVL), which was headed by Prof. Dr. Ing. F. Bendemann. This institute arranged and carried out as its first great task during the winter 1912–13 the contest for the Emperor's prize for the best German aircraft engine, and then took up the solution of all technical questions concerning aircraft. Departments for engines, propellers, and instruments and strength testing of airplane structures were developed.

These departments at first based their efforts chiefly on the investigations of H. Reissner as presented in a lecture before the WGL at the end of November, 1912. These investigations contributed largely to a further development of a reliable design and construction for aircraft.

[1] Director, Deutsche Versuchsanstalt für Luftfahrt.

During the following year the DVL, in frequent exchange with the interested parties, worked out the fundamental instructions for airplane design which were to be taken as authoritative during the war.

During the maneuvers in autumn, 1913, the Aviation Corps were first employed in larger units, and the experience then gained taught that airplanes did not have the strength necessary for the safety of the aviators. Only continuous and most careful examinations of the structural parts of the airplane which were to be put into service could overcome the difficulties encountered.

At the end of 1913 tests regarding strength and resistance of wings were made for the first time and were later on extended to the fuselage, landing gear, and other parts of the plane. The test methods were worked out in the DVL. As a result of the systematic work then done, the airplanes in 1914 measured up to all requirements regarding strength.

The World War brought new experiences, and the aviation corps at the outset were of the opinion that scientific research work could be dispensed with. In summer of 1915, however, this work was renewed and steadily increased. At the end of the war a considerable number of institutions were working on research problems on a large scale. The military technical department (Flugzeugmeisterei) had succeeded in uniting the professional organizations of industry and science with its own technical staff so as to get a mutual interchange of experience and ideas. The technical reports of this department (Technische Berichte der Flugzeugmeisterei) gave all the newly gained experience in a quick and confidential way to the interested parties. However, the industry was too busy to furnish such reports regularly, so the majority were prepared by research institutions. Those principles which were considered authoritative for airplane work were laid down in "Bau- und Liefervorschriften der Inspektion der Fliegertruppen" (BLV). These BLV were issued three times, in 1915, 1916, and 1918. The last edition was not entirely finished, but contained all the important chapters on design and construction.

Since the end of the war the work on airplanes has been directed toward new lines, especially those required for commercial purposes. Not every experience gained with war airplanes can be utilized. The conditions, under which the German airplane factories were compelled to work, necessitated the utmost economy in every possible way. Methods heretofore used will have to be carefully revised, good work maintained, imperfect methods abandoned, and the yet unexplored developed and finally brought to a more perfect state.

The following article gives a description of the views which prevailed in Germany in the past and also endeavors to reveal and clarify existing contradictions.

II. THE AERODYNAMIC PRINCIPLES AND THEIR USE IN DETERMINING THE STRENGTH OF AIRPLANES.

(a) THE AIR FORCES ACTING UPON THE AIRPLANE IN STRAIGHT UNACCELERATED FLIGHT.

The wings are the members which carry the airplane, and their section, shape, and position are arranged to perform this duty. They are attached to the fuselage, the bearer of the driving unit and load, and the stationary parts of the tail unit. The latter member has the duty of stabilizing and steering the airplane. Its construction is similar to that of the wings.

When analyzing strength, the air forces on the wings and tail planes must be considered jointly on account of their close relation. The air forces on other airplane parts can be neglected in most cases.

1. WINGS.

The requirements of aerodynamics regarding the wings, whether monoplane, biplane, or multiplane, are under discussion, and can be summarized as follows: Small proportion of chord to span of wing and section and thickness of wings in proportion to the required flying capacity; small air resistance of the exposed parts of the framework.

The first condition renders the construction of wings difficult. Therefore the determination of the span is usually the result of compromising the requirements of aerodynamics, on the one hand, with structural and weight requirements, on the other. With the flying capacity of

the plane determined, the chord of the wing is determined by the span. The section of the wing can be selected from the numerous test reports published on this subject.

To keep the number of connecting parts of the wing as low as possible, it is again necessary to compromise between air resistance and weight. This report can not deal with these points, which will have to be discussed and determined with every new design, but assumes that they will be fully taken into consideration and that an airplane will be designed accordingly.

The laws of aerodynamics teach that the direction and the center of pressure of the air forces on the wings change with the angle of attack; i. e., the angle between the direction of the air flow and the chord of the wings. This can be compared with the influence of forces upon a structure—a bridge, for instance. The weight of a truck passing over a bridge and the constantly changing air forces require similar assumptions as to load. The following illustrations will explain this.

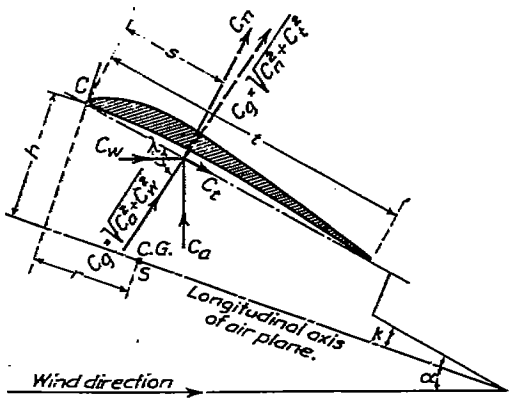

FIG. 1.—Air forces on airplane.

Figure 1 gives the chosen condition.

The angle of incidence k is the angle between the longitudinal axis, which is usually the axis running parallel to the axis of the air propellers through the center of gravity S and the wing chord.

The air forces designated by coefficients introduced by Prandtl are dependent upon the angle of attack α, i. e.—

c_g = coefficient of total force G (kg.).
c_a = coefficient of lift A (kg.) perpendicular to the direction of flight.
c_w = coefficient of drag W (kg.) parallel to the direction of flight.
c_n = coefficient of normal force N (kg.) perpendicular to the wing chord.
c_t = coefficient of tangential force T (kg.) parallel to the wing chord.

The coefficients multiplied by the wind pressure q (kg./m.²) and the area of the wings F (m.²) give the air forces in kg. which act upon the wings.

The wind impact pressure q is derived from the air speed V (m./sec.), the density of the air $j\ \rho$ (kg./m.³), and the acceleration by gravity g (m./sec.²) according to the formula:

$$q=\frac{j\rho}{2_g}\,v^2$$

The air forces create a moment around an axis drawn through the front points of the chord perpendicular to the plane of the figure and running parallel to the leading edge. This moment defined by a coefficient is expressed by the equation:

$$c_m=\frac{s}{t}\,c_n$$

t (m.) indicates the chord length of the wing; s (m.) the distance of the point (center of pressure) at the intersection of the total air force and the wing chord from the projection C of the leading edge upon the chord.

In Figure 1 the resultant coefficient c_g for a certain angle of attack has been divided into the components c_a and c_w and also into the components c_n and c_t. Both divisions can be of great advantage.

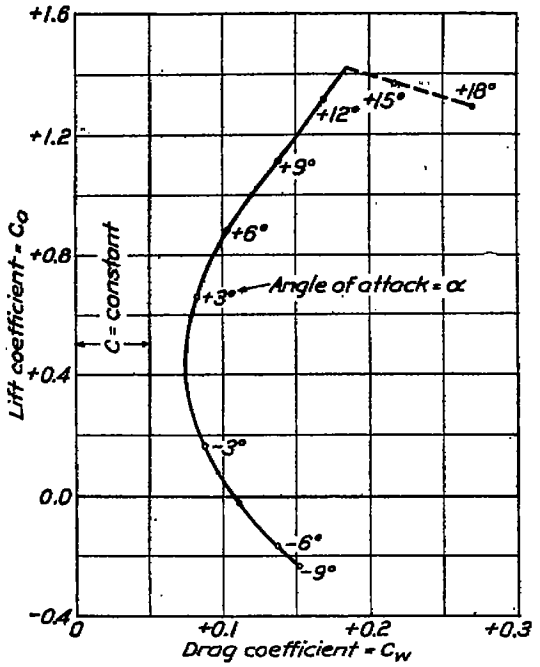

FIG. 2.—Lilienthal's polar diagram.

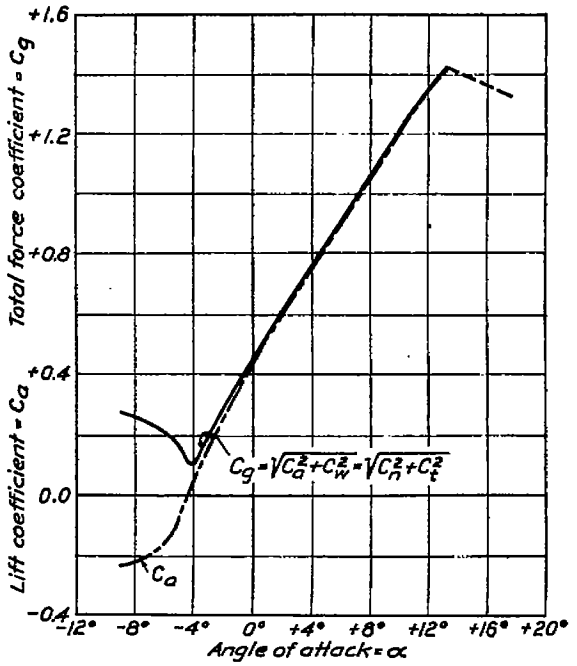

FIG. 3.—Coefficients C_a and C_g in relation to the angle of attack α.

The following illustrations have been prepared with an assumed structural resistance for an airplane $c_{ws}=0.05$: Figure 2 shows the Lilienthal polar diagram (abscissa c_w, ordinate c_a

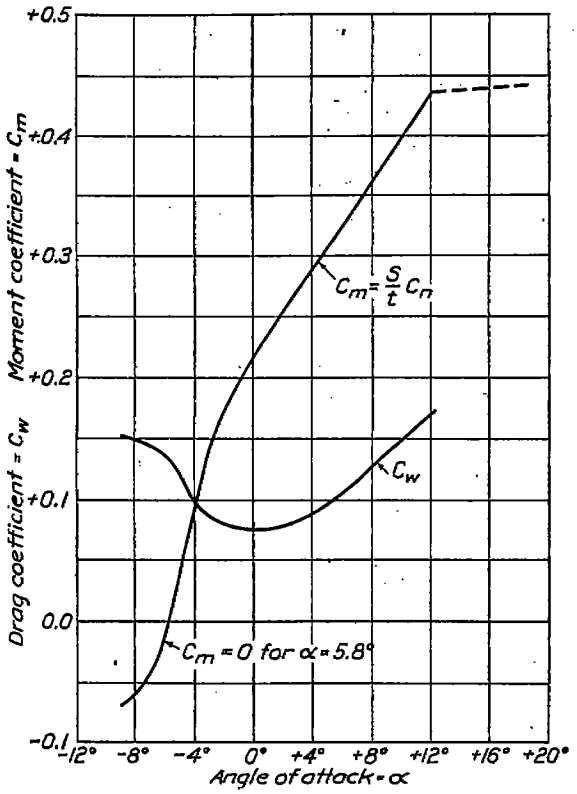

FIG. 4.—Coefficients C_w and C_m in relation to the angle of attack α.

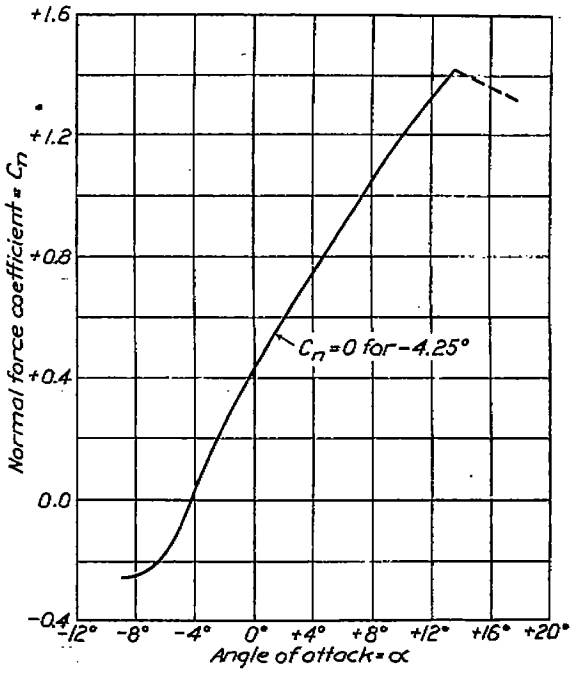

FIG. 5.—Coefficient C_n in relation to the angle of attack α.

with the angle of attack α in the curve); Figure 3, the coefficients c_g and c_a in relation to the angle of attack α; Figure 4, the coefficients c_w and c_m in relation to the angle of attack α; Figure 5, the coefficients c_n in relation to the angle of attack α.

Using the relations given in these figures there is also derived: Figure 6, showing the distance s of the center of pressure from the leading edge of the wing in relation to the angle of attack α: Figure 7, showing the inclination λ of the total air force G to the chord in relation to the angle of attack α.

The curves shown are of importance for aerodynamic as well as strength calculation of an airplane. They indicate the necessity of considering air forces which change direction and position, whereas the range of the angle of attack in regard to the flight of an airplane is not as

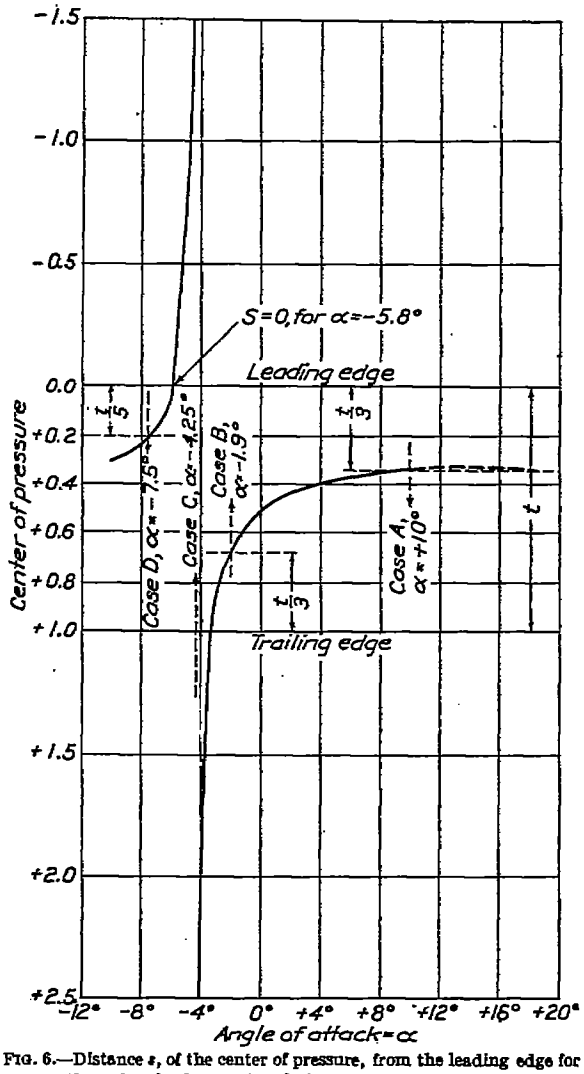

FIG. 6.—Distance s, of the center of pressure, from the leading edge for the various load cases, in relation to the angle of attack α.

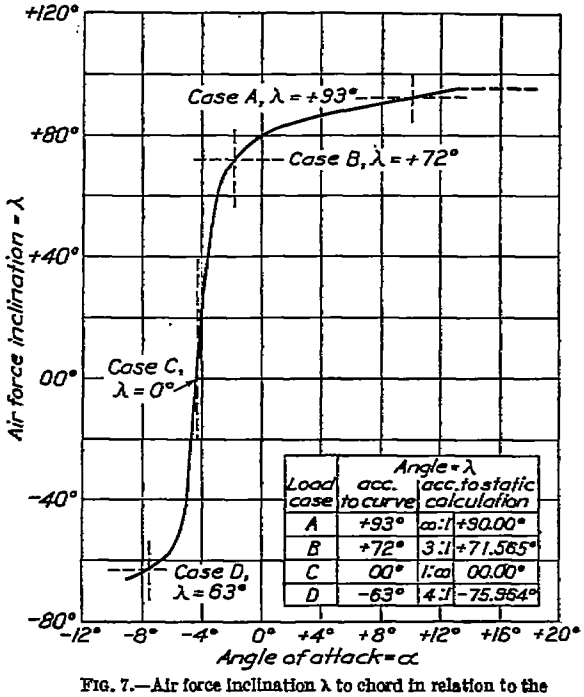

FIG. 7.—Air force inclination λ to chord in relation to the angle of attack α.

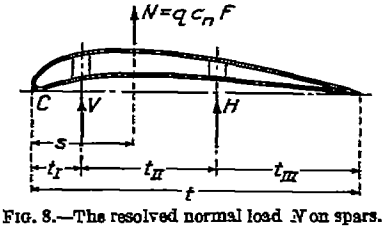

FIG. 8.—The resolved normal load N on spars.

yet determined. This depends upon the size, the weight, the power capacity, and the purpose for which the airplane is constructed.

The range of angle of attack in war airplanes varied, being greatest in pursuit and attack airplanes. As long as the steering of the airplane depends upon the ability of the pilot, a certain additional factor of safety must be used in calculating the strength of the structural parts effected by this range of angle of attack or variation in direction and magnitude of stresses.

Following Reissner's theories, which he presented in a lecture before the WGL in December, 1912, on the strength and safety of airplanes and which he developed later in an essay prepared and published with the aid of his assistant, F. Schwerin, entitled, "The Stress Analysis of Air-

plane Spars," we have for a given arrangement of the spars, the loads upon the spars with changing angle of attack without calculating the partial forces and the forces T acting in the direction of the chord regardless of the thrust of the propeller.

Figure 8 illustrates the arrangement of spars. The spar loads are represented by the forces V (kg.) and H (kg).

The equations are:

$$N = V + H \text{ and}$$
$$sN = t_{\mathrm{I}} V + (t_{\mathrm{I}} + t_{\mathrm{II}}) H$$
$$= c_{\mathrm{n}} s q F$$
$$= c_{\mathrm{m}} t q F$$

Resulting in:

$$\frac{V}{qF} = \left(\frac{t_{\mathrm{I}} + t_{\mathrm{II}}}{t} c_{\mathrm{n}} - c_{\mathrm{m}}\right) \frac{t}{t_{\mathrm{II}}}$$
$$\frac{H}{qF} = \left(c_{\mathrm{m}} - \frac{t_{\mathrm{I}}}{t} c_{\mathrm{n}}\right) \frac{t}{t_{\mathrm{II}}}$$

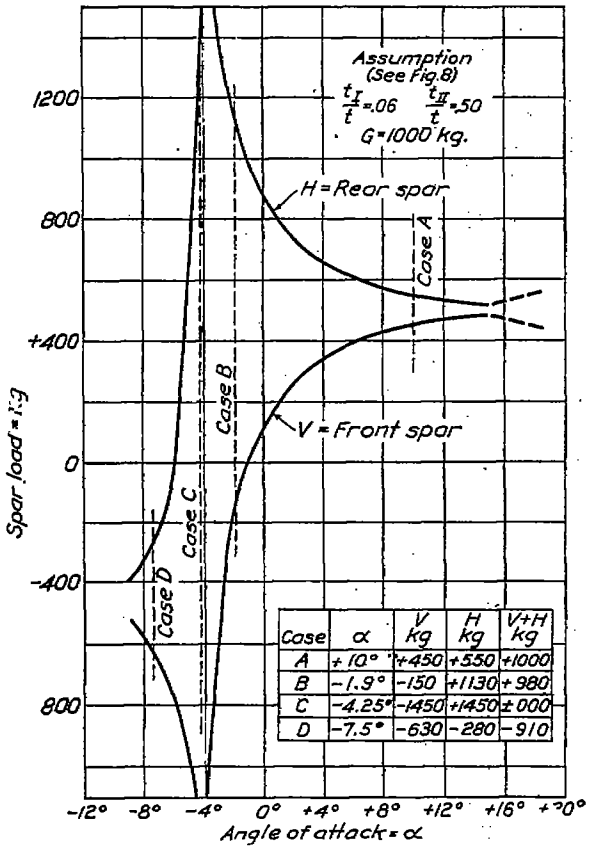

Case	α	V kg	H kg	V+H kg
A	+10°	+450	+550	+1000
B	-1.9°	-150	+1130	+980
C	-4.25°	-1450	+1450	±000
D	-7.5°	-630	-280	-910

FIG. 9.—Spar loads V and H in relation to the angle of attack α.

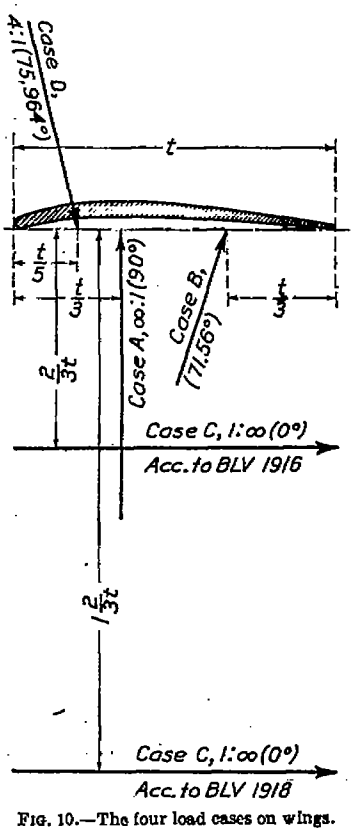

FIG. 10.—The four load cases on wings.

The air pressure resulting from a uniform gliding flight is determined by:

$$q = \frac{G}{c_{\mathrm{g}} F}$$

From this equation the forces upon the spars are derived:

$$V = \left[\frac{t_{\mathrm{I}} + t_{\mathrm{II}}}{t} c_{\mathrm{n}} - c_{\mathrm{m}}\right] \frac{t}{t_{\mathrm{II}}} \times \frac{G}{c_{\mathrm{g}}}$$
$$H = \left[c_{\mathrm{m}} - \frac{t_{\mathrm{I}}}{t} c_{\mathrm{n}}\right] \frac{t}{t_{\mathrm{II}}} \quad \frac{G}{c_{\mathrm{g}}}$$

For an illustration, G is taken as 1,000 kg., and for the wing values already mentioned the spar loads V and H are given in Figure 9 in relation to the angle of attack α. This figure shows that the spar loads, depend to a large degree upon the angle of attack. In a vertical dive ($\alpha = -4.25°$) they are equal and opposite to each other.

Reissner's method can be used whenever figures are available for the angles of the wing section or when they can be derived from existing ones.

As this is not always the case, suggestions of my former assistant Madelung, which tend toward simplifying these matters, were introduced for the first time in the BLV of 1916. They illustrate the air forces upon the wing with sufficient accuracy, regarding position and direction.

From the many possible positions and directions of the air forces, due to the change of the angle of attack, four special cases are selected and illustrated in Figure 10.

(A) *Pulling out of a dive.*—The air force is perpendicular to the wing chord, intersecting same at a point one-third of the chord length from the leading edge.

(B) *Gliding flight.*—The air force is inclined in the proportion of 3 : 1 to the chord and intersects the chord at a distance of one-third of the chord length from the trailing edge.

(C) *Dive.*—The air force is parallel to the chord and at a distance below, equal to two-thirds of the chord length. As this assumption was aerodynamically incorrect, the distance was increased in the BLV of 1918 to 1⅔ of the chord.

(D) *Flying upside down.*—The air force is inclined in the proportion of 4 : 1 to the chord and intersects the chord at a distance of one-fifth of its length from the leading edge.

It can be seen from the illustration in Figures 6 and 7 that the above four cases occur with an exactness sufficient for aerodynamics. Any other example will certainly not give such good conformity together with qualitative accuracy.

On the chart of center of pressure travel the points of the curve corresponding (fig. 6) to one-fifth, one-third, and two-thirds of the chord length and its asymptote to its infinite branches show that the following angles of attack apply to the four cases chosen for determination of the load:

Case A: $\alpha = +10°$
B: $\alpha = -1.9°$
C: $\alpha = -4.25°$
D: $\alpha = -7.5°$

The angles of inclination of the air force λ belonging to these angles of attack are to be taken from Figure 7 and compared with the commonly accepted inclinations:

Angle λ.

	According to Figure 7.	According to BLV, 1916–1918.	
Case A:	+93°	∞ : 1	+90°
B:	+72°	3 : 1	+71.565°
C:	0°	1 : ∞	0°
D:	−63°	4 : 1	−75.964°

The conformity of the angles of inclination as adopted in the BVL with the results of the example is very unsatisfactory in case D. This deviation is expected as greater forces are created in the truss due to the steeper air forces. A special calculation of the truss for load strength due to the effect of inertia is unnecessary. Figure 9 shows the range of the spar loads V and H in relation to the angles of attack in cases A, B, C, and D. In cases A, B, and D the spar loads almost equal the total force G. In case C they balance each other.

Figures 11 to 14 show a biplane in the four positions corresponding to conditions of flight selected as cases A, B, C, and D. In case C the airplane, lying somewhat on its back in consequence of the negative angle of attack and force exerted by the tail unit in balancing the wing momentum, has a lateral component of motion besides the vertical.

As long as the wing is considered as a unit, it is permissible to compute with the total air force alone. This total air force is produced by partial air forces which are spread along the chord of the ribs according to certain laws. The first book by Eiffel and the Sixtieth Report of the English Advisory Committee for Aeronautics, 1911–12, contain valuable information on this subject. Heimann and Madelung explained that through assuming double triangular distribution for the load, cases A to D, the air forces can be estimated for the strength calculation with sufficient aerodynamic accuracy.

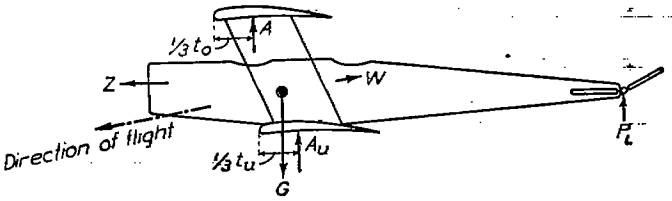

FIG. 11.—Load case A: pulling out of a dive.

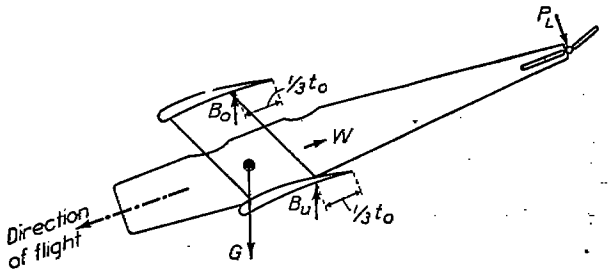

FIG. 12.—Load case B: glide.

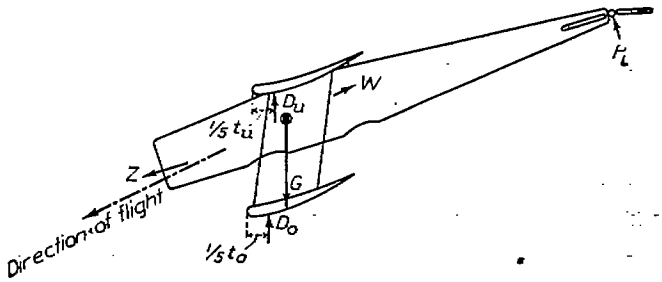

FIG. 14.—Load case D: flying upside down.

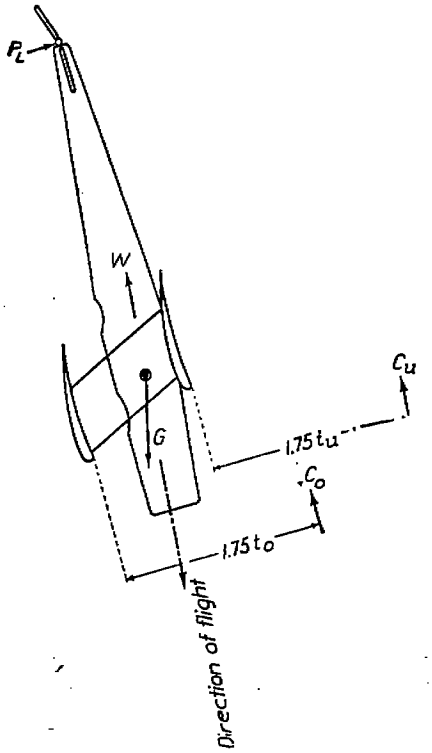

FIG. 13.—Load case C: dive.

In Figure 15 the loads upon the ribs applying to the four above-mentioned cases are plotted as proposed by Heimann and Madelung. In case C the severer condition of the BLV, 1918, is also taken into consideration. In conformity with Figure 10, the following normal forces and moments about the intersection of the chord with the leading edge are given:

Case.	Normal force N.	Moment about the leading edge.	Remarks.
A	G.	$\frac{t}{3}G=+0.333\ tG$	BLV, 1916–1918.
B	$\frac{3.G}{\sqrt{9+1}}=0.948\ G$	$\frac{2}{3}\frac{3\ tG}{\sqrt{10}}=+0.632\ tG$	BLV, 1916–1918.
C	0	$\frac{2}{3}\ tG=+0.667\ tG$	BLV, 1916.
		$\frac{5}{3}\ tG=+1.667\ tG$	BLV, 1918.
D	$\frac{4.G}{\sqrt{16+1}}=0.970\ G$	$\frac{1}{5}\frac{4\ tG}{\sqrt{17}}=-0.194\ tG$	BLV, 1916–1918.

The areas of loads shown in Figure 15 again result in partial pressures upon the upper and lower surfaces of the wings. The question to be determined is whether, and to what extent is a subdivision of these forces necessary. Concerning ribs of the airplane of to-day this is not as yet necessary, but as the ribs become larger, and especially if the cap strips are designed as independent girders, this consideration will become necessary.

The results obtained and published, regarding tests on airplane models in different countries, are classified for a fixed aspect ratio. Those of the AeVA in Göttingen apply for an aspect ratio of 6.

The formula developed by Albert Betz permits of a transfer of wings with different spans from a monoplane to a biplane, without great difficulty. The formulas are given in Table I.

Using the Betz formulas the size of the air force can be determined for any proportion of the wings and for any shape of the camber.

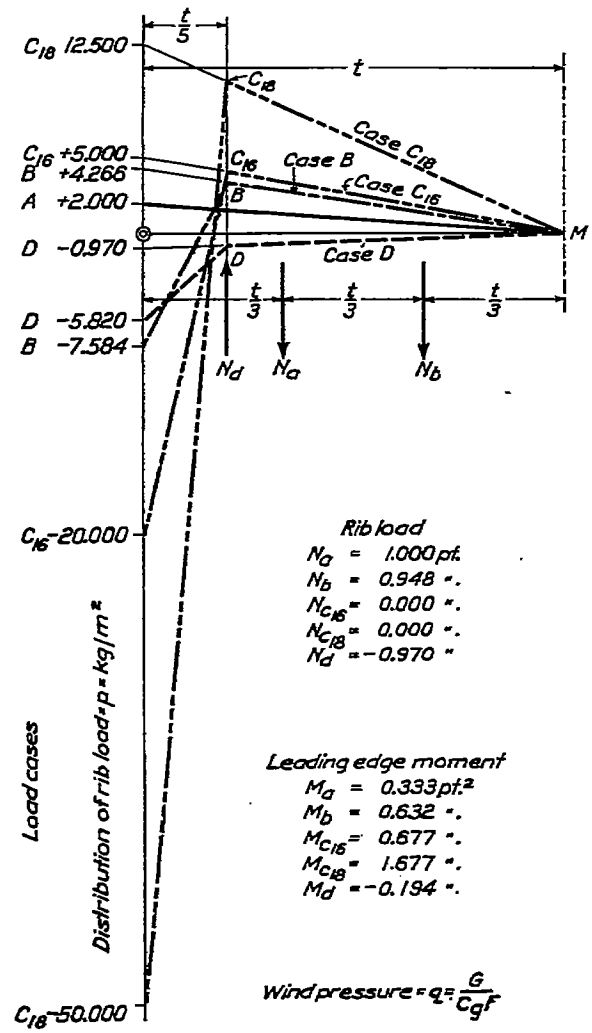

FIG. 15.—Distribution of wind forces along the wing chord for cases A, B, C, and D. Moment about the leading edge.

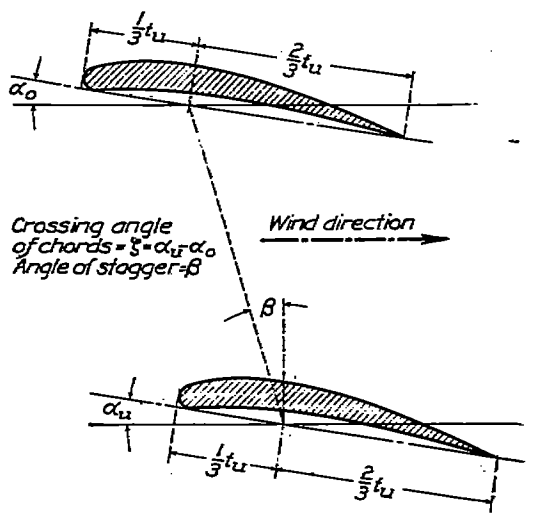

FIG. 17.—Angle of stagger β and crossing angle of chords ζ of a biplane.

Until 1918 the specified ratio between upper and lower wing was 11:9 or 55:45 for all load cases on all types of biplanes. This is substantially an acceptance of the proposals of Reissner and the DVL, who used this relation from the very beginning in determining strength and stability. This ratio is taken from Table XX of the first complete edition of Eiffel's book.

An exact calculation reveals that this ratio can not be maintained. The Betz formula of conversion makes it possible to prove in special illustrations that the ratios depend on the angle of stagger β and the crossing angle of chords ζ for the different load cases and provide a basis for the 1918 BLV.

The angle of stagger β and the crossing angle of chords ζ are explained in Figure 17. Illustrations 18 to 21 represent the conditions of specific loading according to the BLV of 1918 on the upper wing in relation to that on the lower wing of a biplane. It is to be noted that the angle of stagger applies to the wings and not to the spars.

The angle of stagger of 26½° corresponds to a displacement of the wing from its normal position of half a chord length.

In case A the curves for 20° and 26½° are practically the same. In case C the distribution of the air forces is independent of the angle of stagger In case of a biplane with crossing

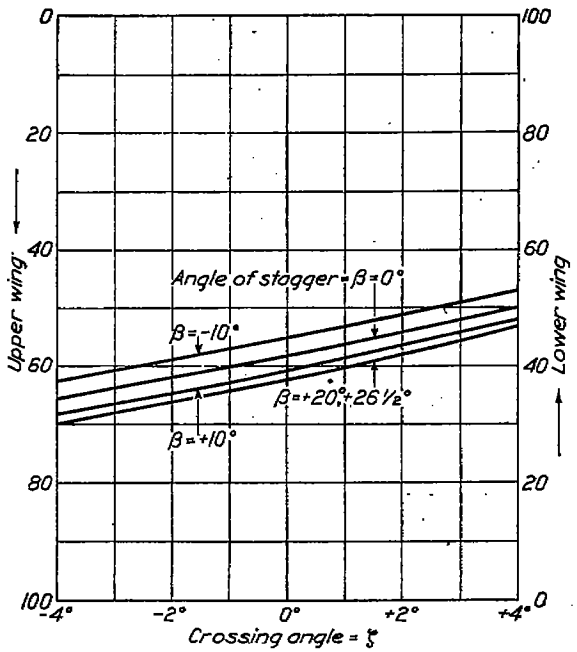

FIG. 18.—Load case A, relation between loads on upper wing and lower wing, when pulling out of a dive.

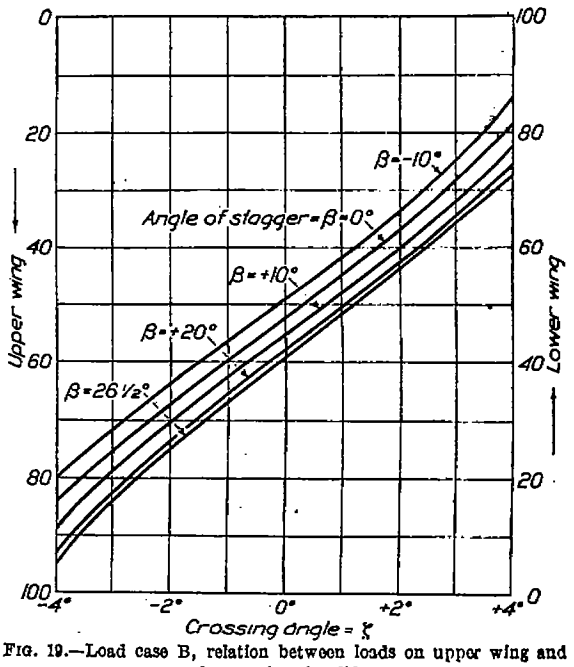

FIG. 19.—Load case B, relation between loads on upper wing and lower wing, in glide.

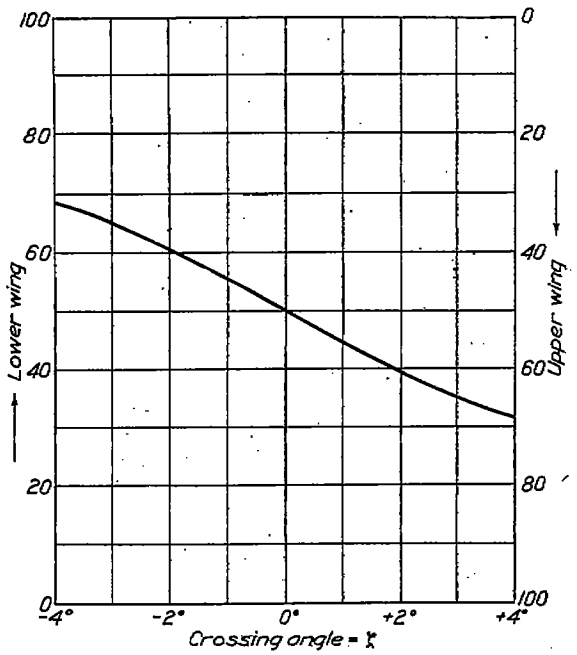

FIG. 20.—Load case C, relation between loads on upper wing and lower wing, in a dive

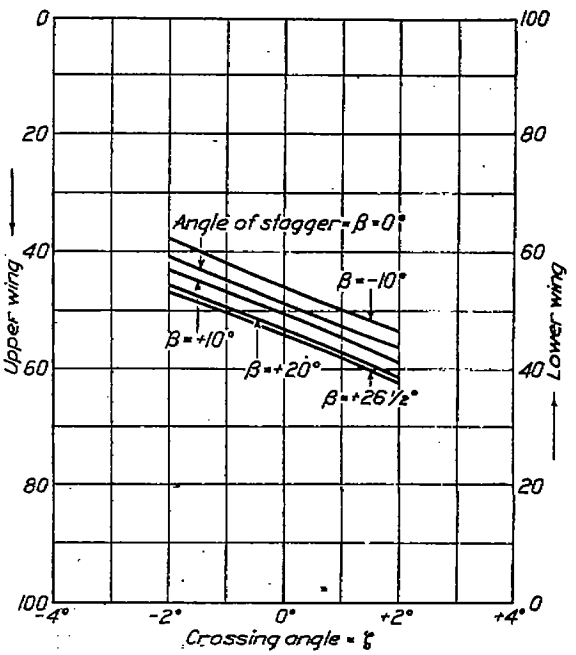

FIG. 21.—Load case D, relation between loads on upper wing and lower wing, when flying upside down.

chords one of the wings has a positive lift and the other a negative. These forces are opposite and equal to each other. They have either to be taken from a polar diagram or to be calculated.

As an example, for angles $\beta = +10°$ and $\zeta = -2°$ the conditions of load for the different cases are enumerated below:

	Case.			
	A	B	C	D
Specific pressure on upper wings	64.5	70.4	39.2	43.0
Specific pressure on lower wings	35.5	19.6	60.8	57.0

This tabulation shows the importance of discarding the adopted relation of 55:45.

The above holds good for the distribution of air forces along the wing chord. The knowledge of the lateral air distribution is of the same importance and can be more easily and accurately treated than the longitudinal distribution.

The first investigations by Eiffel revealed that the lateral distribution of the air forces is irregular in the center and flows off toward the edge. The assumption of a uniform load upon the wings from the fuselage toward the tip of the wings is approximately correct at the center of the wings only, as the load would be too great toward the tip. Reissner advocated this distribution in his lecture in 1912, and for some time this regulation was utilized in the construction of airplanes. However, when airplane wings with a washout were introduced, the DVL decided to take a different view, consequently, it was decided that the air distribution from the center toward the tip of the wings was uniform to a point one chord length from the tips of the wing. It was assumed that from this point on to the tip of the wing, the load decreases until it reaches half the value of the load in the center (see fig. 16). The reduction to zero on the tip was not considered advisable for the reason that the ailerons are usually extended to the tip of the wings and when in use produce an increased stress at this point. In case of overhang, it has been assumed, in accordance with the BLV of 1918, that the load is uniform up to the tip.

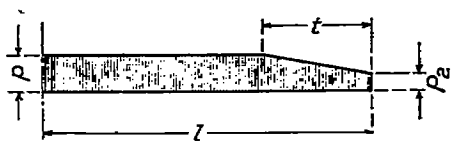

FIG. 16.—Lateral distribution of wing forces.

Wings that vary in section and plan construction and in angle of incidence require careful consideration. When proper aerodynamic data are not available, which is frequently the case, the rules for ordinary wings have to be carefully examined before they can be applied.

In most cases no difficulty will be experienced in investigating the chosen shape of wings. Aside from the summary investigation of the influence of the air forces upon the wings, such members of the wings which are attacked by an accumulation of component forces must be carefully considered. The leading edges and the tips of the wings represent such points. It will be remembered that the component forces on leading edges and on the tips of the wings increase suddenly. Experience teaches that insufficient regard for the effect of tip vortices has resulted in the fabric being torn off at the tips when insecurely fastened.

Recently A. v. Parseval in a lecture before the WGL on October 15, 1920, referred to the sucking effect of these eddy currents.

2. TAIL UNIT OR THE EMPENNAGE.

The air forces acting upon the empennage, which have to be considered when calculating the stability, can in the present state of airplane design be estimated only according to assumptions which will simplify matters.

The tail unit consists of the elevators, which impress pitching moments to the airplane, and the rudder, which, acting with the ailerons in the trailing edge of the wings, effects the yawing and rolling movements of the plane.

As to calculations of strength, the ailerons belong to the wings and do not therefore require special attention under this heading.

The air forces acting upon the elevators can be easily derived from the air forces acting upon the wings. The air forces acting upon the rudder are not so readily explained. It was usually assumed that the loads on the rudder were the same as those on the elevators, although this was known to be unnecessarily severe.

Messrs. R. Fuchs and L. Hopf explained how the moment turning around the center of gravity S of the airplane can be calculated in a simple manner from the coefficients c_a, c_w, and c_m of a wing and the coordinates h (m.) and r (m.) of the center of gravity of the airplane (fig. 1).

In this figure the point C was taken as the origin of the ordinates and was obtained by projecting the leading edge upon the wing chord.

The wing moment M_f (mkg.) is now expressed as:

$$M_f = qtF\left\{c_m + \frac{h}{t}[c_a \sin(\alpha-\kappa) - c_w \cos(\alpha-\kappa] - \frac{r}{t}[c_a \cos(\alpha-\kappa) + c_w \sin(\alpha-\kappa)]\right\}$$

The direction of M_f is taken as positive if the moment tends to tilt the airplane downward. If, however, it is assumed, as in the preceding chapters, that when calculating the spar loads the wind pressure is eliminated, deductions may be made according to the following equation:

$$q = \frac{G}{c_g F}$$

In the figure k is introduced depending upon the chosen section and dimensions of the wing and varying with the angle of attack α:

$$k = \frac{1}{c_g}\left\{c_m + \frac{h}{t}[c_a \sin(\alpha-\kappa) - c_w \cos(\alpha-\kappa)] - \frac{r}{t}[c_a \cos(\alpha-\kappa) + c_w \sin(\alpha-\kappa)]\right\}$$

then the moment is:

$$M_f = ktG$$

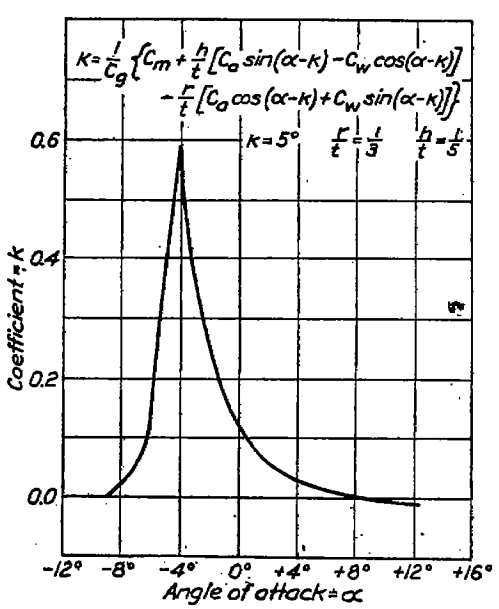

FIG. 22.—Coefficient k in relation to angle of attack α.

In the example of a wing, as given in the preceding chapter (see figs. 2 to 9), with the position of the center of gravity $\frac{r}{t} = \frac{1}{3}$ and $\frac{h}{t} = \frac{1}{5}$ and an angle of incidence of $\kappa = 5°$, the line of the obtained $-k$ values is plotted against the value of the angle of attack (see fig. 22). This illustrates that the coefficient k is smaller if the angle of attack is great but increases gradually with decreasing angle of attack and reaches a maximum near the value of $-4°$ for the angle of attack (dive, case C). It again decreases below this value. The curve representing the values k depends to a large extent upon the values $\frac{r}{t}$ and $\frac{h}{t}$. The position of the center of gravity and therefore the coordinates r and h are to be chosen in such a way that the coefficient k will be small in comparison to range of angle of attack ordinarily expected during the flight. An increase of $\frac{h}{t}$ causes a lowering of the k curve especially at the top within the range of the dive. If the values of the angles of attack are high and positive, k is more indifferent toward a change of $\frac{h}{t}$, the air forces, as shown before, being almost vertical to the wing axis and therefore nearly parallel with the coordinate axis of the k values.

The moment coefficient k, about the leading edge C in the different load cases A, B, C, and D, can be taken from the explanation given to Figure 15.

Assuming the same position for the center of gravity as before, namely, $\frac{r}{t}=\frac{1}{3}$; $\frac{h}{t}=\frac{1}{5}$, the coefficient k of the wing moment M_f turning around the center of gravity S is calculated in the following way:

Case.	Moment coefficient k, about the leading edge.	Moment coefficient k, about the center of gravity S.	Remarks.
A	+0.333	−0.056	BLV, 1916–1918.
B	+0.632	+0.243	BLV, 1916–1918.
C	+0.667	+0.278	BLV, 1916.
	+1.667	+1.278	BLV, 1918.
D	−0.1937	+0.1953	BLV, 1916–1918.

The coefficient reaches its highest value in case C. The position of the center of gravity of the example agrees to some extent with that of airplanes already built. It is therefore permissible to introduce the highest value of k, according to the calculated data, as

$$k_{max}=1.3.$$

Opposing the wing moment M_f there is another moment equally great in straight unaccelerated flight, that acting upon the elevator. The airplane body with the landing gear and floats exposed to the air currents also require stabilizing by the elevator. Generally the forces necessary in this case are small compared with those acting upon the wings, and it is permissible to neglect them and to figure the wing moment only.

The center of the lifting force of the elevators can be assumed with sufficient accuracy to be in the center of area of the horizontal tail surface F_h (m.²).

If the distance between the center of gravity of the airplane and the center of area of the horizontal tail surface is a (m.), then the total air force Q_h (kg.) acting upon the elevator and tail plane is given by the equation:

$$Q_h=\frac{M_f}{a}=k\,\frac{t}{a}G$$

If c_{ah} is introduced as a lift coefficient of the tail surface depending upon the angle of the tail plane and the position of the elevator, the following calculation can be made:

$$Q_h=c_{ah}qF_h=\frac{c_{ah}}{c_g}\frac{G}{F}F_h \text{ and}$$

$$\frac{Q_h}{F_h}=\frac{c_{ah}}{c_g}\frac{G}{F}$$

From this equation follows, that

$$\frac{\text{specific load on tail surface}}{\text{specific load on wings}}=\frac{\text{lift coefficient on tail surface}}{\text{coefficient of total force on wing}}.$$

The maximum value of the specific load upon the tail surface for a given specific load upon the wings is obtained therefore in case C (dive) with the smallest value for c_g and the greatest for c_{ah}, if the elevator is turned to the extreme position.

After the total force upon the elevator has been determined according to either method, the same problem relative to the distribution of the air forces acting upon the elevator has to be solved using the same method explained regarding the wings. The experiments known on this subject show that the distribution of the air forces depends largely upon plan form and the proportion of elevator to tail-plane area. Data for a special construction are derived only from special tests. The numerous test figures given in the TB do not show accurately the distribution of the air forces, but give figures for the lift resistance and moments only.

The elevators of airplanes commonly in use are chiefly subjected to air forces which act in one direction. Many airplanes have tail units with curved surfaces so as to utilize these air forces.

In case the tail units have the form of wings, the air distribution for the latter can be taken as typical. But if not it would be advisable to make use of simplifying methods in calculating the air forces, especially since the tail unit in most cases is not large enough to permit of an exact investigation.

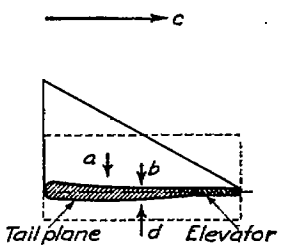

FIG. 23.—Load cases on horizontal negative tailplane and elevator.

In considering the elevators, four load cases are chosen, demonstrating with ample accuracy all aerodynamic requirements. (See fig. 23.)

Case a: Pressure from above.—The air force Q_h is distributed over the positive pressure side of elevator, so that the center of pressure lies at a distance equal to one-third of the tail unit's chord from the leading edge.

Case b: Pressure from above.—The air force is distributed uniformly over the positive pressure side of the horizontal tail surface. The center of lift lies at a distance from the leading edge equal to half the chord of the horizontal tail surface.

Case c: Warping.—The air force Q_h runs on the concave side at a distance equal and parallel to the chord of the horizontal tail surface.

Case d: Pressure from below.—The air force Q_h is uniformly distributed over the negative pressure side of the surface. The center of pressure is at a distance equal to half the tail unit's chord from the leading edge.

These four cases do not correspond to the load cases for wings designated by capital letters in the preceding chapters, but they do include the load possibilities of the elevators. The lateral distribution of the loads is assumed to be uniform, thus simplifying the calculation but giving higher stresses than are actually obtained.

In contrast to the horizontal tail surface, the vertical fin and rudder are subjected in flight to equal forces from either side; consequently they are always constructed either as plane or symmetrically cambered surfaces. Omitting load case d, the remaining cases, a, b, and c, have to be applied to both sides. The force Q_s exerted on the rudder is not specially calculated, but is derived from the well-known basic laws for elevators, that is to say:

Since rudders are subjected to the same wind pressure as elevators and since they receive, with similar rudder deflections, forces of corresponding magnitude, the same unit-surface load is chosen for both members. If F_s (m.^{2}) means the area of the vertical tail surfaces, the following equation holds good:

$$\frac{Q_s}{F_s}=\frac{Q_h}{F_h}$$

The rudder needs special investigation. An unbalanced rudder forms a continuation of the fin which has a pivot or hinge, about which the rudder oscillates. The balancing surface of a rudder is, according to its relative area, subjected to the same load as the rudder itself.

(b) AIR FORCES EXERTED ON WINGS AND TAIL UNIT IN CURVED AND ACCELERATED FLIGHT.

The straight and unaccelerated flight of an airplane is an exception. Even if the rudder is not moved, there are always small oscillations caused by lateral balancing, which in turn accelerate or retard the flight velocity and which are accompanied by corresponding changes of wind pressure and angle of attack. Usually, however, flights without operation of the rudder will so closely resemble the straight unaccelerated flight that the latter can be safely assumed.

When the steering action takes place, the airplane takes a curved path. Centrifugal force combines with acceleration of gravity to form a new force which is greater the smaller the radius of the curved path. In calculation of airplane strength it is necessary to know the magnitude of this "apparent" airplane weight.

Reissner asserted in his lecture before the WGL, already referred to, that the spar loads resulting from centrifugal force in curved flight must be calculated. Assuming that the path of the flight when rising is circular and that the initial velocity, the radius of curve, and the height is known, he contends that the load upon the wings could be a little more than double the load experienced in straight flight. He discusses further the case where the highest conceivable wind pressure is combined with the largest angle of attack and the most unfavorable spar loads, and estimates that this coincidence of the forces will produce a load more than three times that of an ordinary wing load. As experiences of practical flights were lacking, Reissner's theory did not clear up sufficiently the magnitude of the wing loads, which in reality appear as multiples of the load in a curved flight.

Either of two methods could be considered.

The WGL decided to obtain the necessary fundamental data by creating an instrument for registering accelerations in the form of a curve. For this purpose a contest for the production of an accelerometer for airplanes was arranged for July 26, 1913, with the stipulations that the meter had to register the highest values and changes of the apparent components of gravity perpendicular to the supporting surfaces and to record data as to their magnitude and frequency, the range of measuring comprising in upward flight at least eight times the acceleration of gravity and in downward flight at least the simple amount of the acceleration of gravity.

Several kinds of instruments were received according to specifications at the testing stand of the DVL, until July 1, 1914, but could not be tested due to the outbreak of the war. Even at a later time the contest could not be carried out. The accelerometer was not much used in Germany. Except for the shocks experienced in a seaplane when touching the water, the accelerometer of Albert Betz was successfully used. Recently Wolfgang Klemperer built an accelerometer which in a convenient size can be attached to the instrument board of an airplane and permit a continual observation of accelerations.

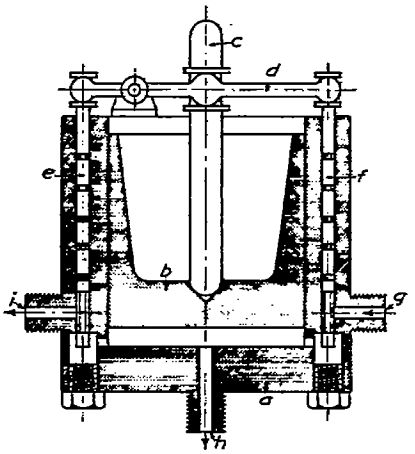

FIG. 24.—Bendemann's measuring device.

In England the recording device of Scarle, consisting of a thread of quartz, was successfully employed. In Barstow's book it is stated that in a sham battle a value was reached equal to four times the acceleration of gravity. This is an extraordinarily high value.

The DVL followed the other method and tried to solve the problem by measuring directly the forces in the wing wires. The measuring devices designed and used for the first time in 1913 made this possible. The measuring points were located in the airplane lift wires; the registering stand was in the observation room. Between these points a connection had to be provided which would guarantee a sure and immediate transmission. The hydraulic transmission offered these advantages, especially in connection with Bendemann's measuring device, the features of which are briefly explained in Figure 24.

A cylinder *a*, closed on one side, contains a light, but closely fitting piston *b*, on which a force can be exerted by a rod *c*. On cylinder *a* a lever *d* is mounted, which is engaged between flanges of the member *c* and regulating piston valves *e* and *f*. These pistons are fitted into the cylinder *a*. When rod *c* is loaded, piston *b* moves downward. The regulating piston is actuated upon and admits pressure liquid through inlet *g* until piston *b* returns to its middle position and the inlet is closed. The space underneath the piston connects opening *h* to a pressure gage (either an ordinary pressure gage or an indicator as commonly used with engines). This instrument registers the pressure of the liquid and therefore the pressure acting upon the piston *b*. If the load on piston *b* is decreased, some of the pressure liquid flows out of the gage

into cylinder a. As all commonly used gages work on the principle of change of space, the piston b is lifted, moving the piston valve e and allowing liquid to escape through the passage i until equilibrium is reached. The piston has a very slight travel except under sudden changes of load. These movements are limited through the position of the regulating piston and the lever arrangement. The movements can be made so small that they are practically negligible.

When Bendemann's measuring device was first used, the special regulating pistons were omitted on account of simplicity, and the carrying piston was equipped with regulating ports. Its zero position was consequently not so sensitive, but no trouble was experienced. In some makes of measuring device a special regulation of the outlet was not provided and the equalizing of the pressures was partly left to leaks around the piston and partly to small movements of the piston.

As it was thought inadvisable to have measuring devices in the main truss links, necessitating a great change in the structure of the wing, a device was built as shown in Figure 25. The cable to be tested of a thickness of s (m.) loaded by a force S (kg.), was run in a slight bend a (m.) over three pulleys, so that a force P (kg.) resulted in the center:

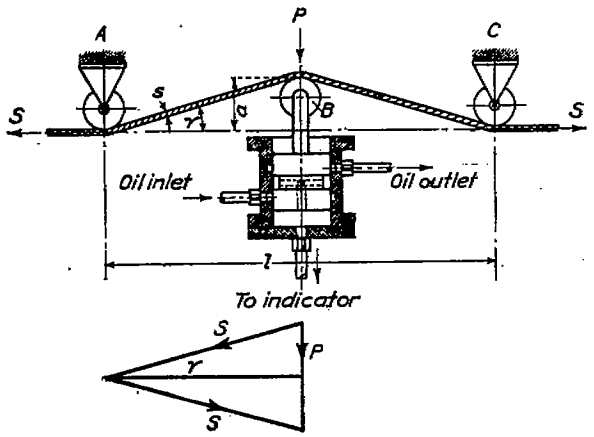

FIG. 25.—Tensiometer diagram.

$$P=2S \sin \gamma$$

This force was taken up by a measuring device with an area of F (cm.²) and was measured by pressure p (kg./cm.²).

Therefore:

$$S=\frac{P\,F}{2 \sin \gamma}$$

and through the geometrical formula:

$$tan\ \gamma=\frac{2(a+s)}{l}$$

the angle γ is fixed. In the above equation l (m.) is the distance between the two outer bends. With a very small value for angle γ:

$$S=\frac{P\,l\,F}{4(a+s)}$$

The first trials with the tensiometer (see fig. 26) were made in February, 1914, on a Taube airplane of the Albatros Co. G.m.b.H. in Johannisthal. This airplane, on account of its peculiar landing gear, which also served as the lower king post of the wing truss, was especially adapted for the intended purpose.

The cables to the wings were run to points fore and aft beginning at an attachment somewhat above the axle of the landing gear. They were connected by horizontal cables running through these attachments. The tensiometers were placed between on these cables (see fig. 27).

This arrangement could be used, as there was no danger of exceeding the elastic limit of the airplane parts, and consequently the law of elasticity held good. The conclusions drawn from this test could be applied to similar wings.

The test pilot, Ernst V. Loessl, flew the Taube in the best possible way, considering the clumsiness of this airplane. The factor k indicates the ratio of the registered tension to the tension of the cable in horizontal unaccelerated flight:

Kind of flight:	Factor k.
Initial tension (on ground)	0.67
Climbing	1.07
Gliding	.94
Lateral curving flight	1.40
Leveling out of a glide	1.60

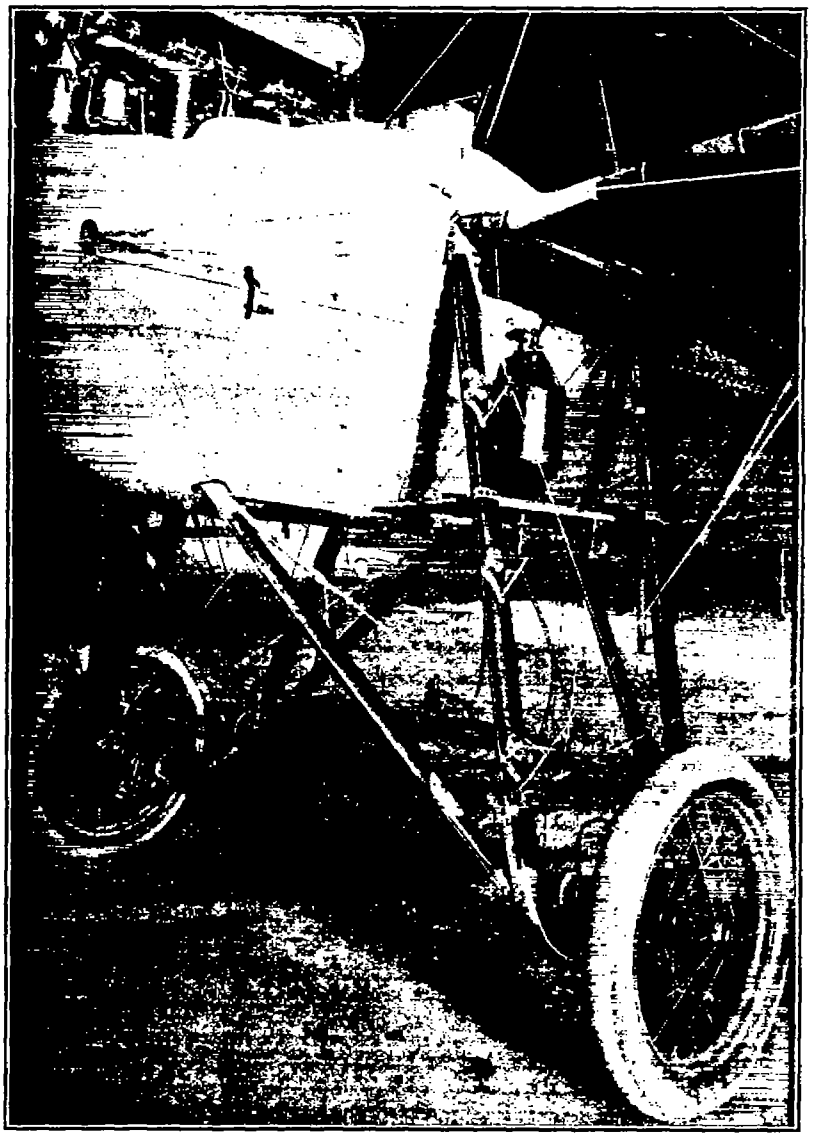

Fig. 27.—Tensiometer attached to wires.

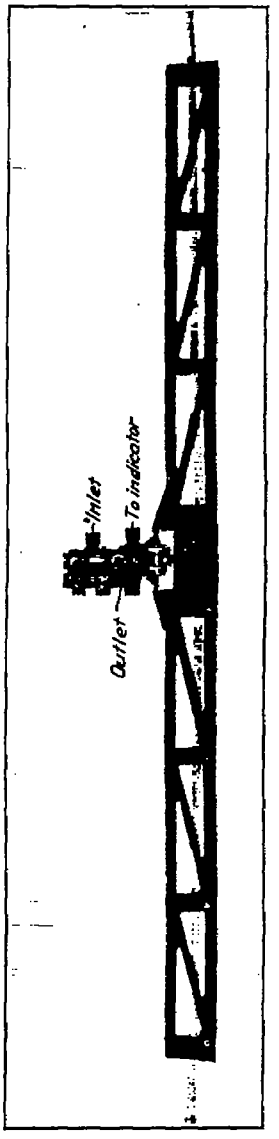

Fig. 26.—Tensiometer.

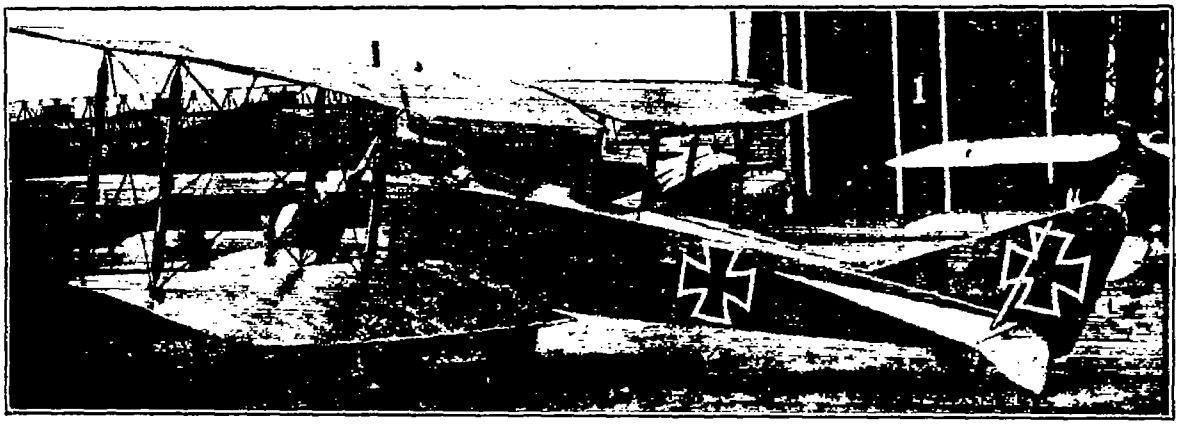

Fig. 28.—View of Alb. B II.

The results obtained were not satisfactory. The high stability of the trial airplane could not sufficiently be overcome by the pilot. Another trial was therefore immediately made with a biplane built by the same factory, Alb B II.

This trial airplane (see fig. 28) was equipped with the 100-horsepower D. I. engine of the Daimler Engine Co. A. G. Untertürkheim. According to the test log the tensions must be measured at the following points:

(*a*) In the cables of the inner bay of the wing in uniform straight flight, in squalls, in banking, in gliding, and in exaggerated pulling out of a glide.

(*b*) The same as under (*a*); in the wires running from the upper rear spar to the engine, especially during gliding flight.

(*c*) In the counter wires of the inner bay of the wing.

(*d*) In the four cables of the outer parts of the wing during straight flight. (This requirement was withdrawn later on, as the airplane was urgently needed for service.)

The tests were made in June, 1914. The same measuring devices used for the Taube were used in this case. The correct operation of the devices were ascertained by special tests made before and after the trials on the airplane.

The test pilots succeeded in accomplishing more with the biplane. The results also checked with each other better, as both wings were tested simultaneously. Besides the wires, on which tests were made, there were the more predominant wing carriers differing from those of the wires in the fuselage trussing of the Taube.

The results of the test are given below:

Kind of flight.	Factor k.		
	Main cables.	Front cables.	Counter cables.
Horizontal flight	1.00	1.00	1.00
Left-hand bank	1.04	1.01	0.98
Right-hand bank	1.05	1.02	----------
Spiral (left hand)	1.78	1.33	----------
Righting out of a bank	1.60	1.34	0.33
Gliding flight	0.88	0.83	1.14
Leveling out of a glide	1.69	1.30	0.42
Landing shocks	----------	----------	2.49

The calculation of the total airplane weight, from the test results, was attempted. It was assumed that the results obtained at different times, with the same flight evolutions, could be used and that 92 per cent of the body weight carried by the wings could be accounted for, the remaining 8 per cent to be considered as load upon the connections of the wings to the body and as air forces upon the elevator of the airplane, which in this case was "nose heavy."

The rolling moment could also be determined, with sufficient accuracy, from the difference in tension in the lifting wires of both wings.

The additional air forces, in the different wires when pulling out of a gliding flight, resulted in a value equal to 2.01 times that of the air forces in a horizontal flight.

A center of pressure travel equal to 10.5 per cent of the wing chord was also demonstrated by the experiments. This occurred at an angle of attack of 3.2° and is a very small variation, if the tests with the wing model are taken as the standard. This travel could be accounted for qualitatively in the warping of the wing edges. The experiments of 1914 were of great importance for the constructive development of German airplanes, forming a safe basis for computation.

During the war the experiments with C airplanes were repeated by the Flz. New data for the loads upon the wings were not gained, as the tests unfortunately could not be analyzed.

The tension measurements in the wing wires made clear the variation of forces in the wings during the evolutions of flight and revealed that in "pulling out from a dive," case A, the greatest loads were experienced.

Although the experiments were conducted with a type of airplane having a relatively small engine, the conclusions reached could nevertheless be applied to heavier, similar, and lighter types. Experience verified these conclusions, showing that the right basis had been found, upon which further development was possible.

It was not so easy to obtain forces experienced by the tail unit in the evolutions of flight.

The human body being naturally sensitive to the accelerations of gravity, the pilot possesses in his own body a very dependable accelerometer. He is unable, however, to estimate the turning moments created by the operation of the rudder. The human body is affected very little by angular accelerations. This assertion is confirmed in dancing or gymnastics, where the body experiences considerable angular accelerations without becoming dizzy. The accelerations of an airplane can not be used as a measure for stresses in the tail unit. Only through centrifugal force which will act later upon the airplane and which is felt by the pilot is it possible to avoid continuous and excessive turning movements.

In the preceding chapter it is explained that the elevator receives the greatest loads in diving. Damage to the elevator found on a number of light airplanes after pulling out of a dive verifies this statement. Therefore the most dangerous elevator load does not occur in case A but in that evolution of flight which corresponds perhaps to case B and case C, should the latter condition ever occur.

This distinction is important. The greatest load on the wings occurs in case A, while that on the tail surfaces occurs in either case B or C. Through this experience, in limiting the increased air forces to be expected during a flight, the factor of safety necessary for the strength calculation is obtained.

When observing the velocity of different airplanes in a variety of flight attitudes it can be seen that the velocity of heavy airplanes in gliding only slightly exceeds that in horizontal flight; that the increase in velocity of lighter airplanes is somewhat greater; and that even with pursuit airplanes the full and final velocity corresponding to case C can not be reached. With war planes, which in air battles experience the most violent movements, it is reasonable to assume a flight evolution corresponding to that of case C, although this case has never been observed. With airplanes for passenger service, especially with those of heavier construction, case C to its full extent will never occur.

With lateral movements of the airplane this can happen, in that the air strikes the airplane from the side and not parallel to the axis of symmetry as assumed so far.

In the sudden and intended turning movements of pursuit airplanes, very large lateral air currents must be taken into consideration. Especially conducted tests on models, with air forces similar to those occurring in such evolutions of flight, do not exist. It could be concluded from the breaking of a Cl biplane having ailerons in the upper wing only, that in making a curved flight a lateral force equal to one-third of the total weight of the plane is exerted upon the upper wing. This observation suggested the existence of one-sided working loads.

With some lateral movements of the airplane the elevator is put into action, so that both members take up forces which have to be taken into consideration in strength calculations. As the ratio of the magnitude of the forces on both members is as yet unknown, the assumption that the highest values will occur at the same time is justified.

The moments of inertia around the different axes of an airplane are not affected by angular acceleration. This resistance is due to those parts of the airplane which are located at some distance from the axes of the airplane. In angular accelerations the forces on the control surfaces are largely balanced by the weight of these surfaces themselves and of other parts in their immediate vicinity.

(c) RULES FOR STRENGTH OF WINGS AND TAIL UNIT.

In every line of engineering development an investigation of the maximum working loads must precede the strength calculations of the structural parts. The result of the investigations is expressed as a safety factor, depending on the kind and frequency of the load in order to determine the strength of the structural parts. This factor of safety is taken so high that the limit of elasticity can not be reached under any working condition and that permanent distortions can never occur. The maximum value of the load of an airplane, as has been explained in the preceding chapter, can not be calculated with absolute correctness, but can be estimated only by comparison. The investigations already mentioned on an Alb B II, in June, 1914, show that a load twice that of the static load will be experienced in flight, being greater with lighter and more maneuverable airplanes (pursuit airplanes) and less with heavier and clumsier airplanes (giant airplanes). These figures for static loads must be multiplied by a sufficient factor of safety, and by so doing the load factor necessary for the calculation of the breaking strength is obtained. In airplane designing the method of first finding the working load by means of one factor and then the safety load by means of another factor has the great disadvantage of twice necessitating a compromise on chosen factors. Therefore it was decided to use one only, namely, the product of these two figures, and to leave open to discussion the apportioning of this product into factors. Unfortunately this product is often called the factor of safety. Attention is called to this expression, as otherwise a false idea might be obtained (it should be noted that the customary American term "load factor" leaves less chance for ambiguity than does "factor of safety") of the significance of the factor of safety as used in aeronautics.

1. WINGS.

At the beginning of the war it was thought necessary to use a safety factor of 6 in calculating the strength of wings under conditions of case A (pulling out of a dive). In the earlier part of 1915 this figure was changed to agree with results obtained in measurements of wire tension, as explained in the preceding chapter, thus requiring a safety factor of 4½ times the load. The way of reasoning at that time was as follows: The difference between the limit of elasticity and the ultimate strength of the materials generally used in building airplanes, i. e., timber and steel, is not the same. With the bent timber (wing spars) values must be taken which are less than one-half of the ultimate strength. With steel these figures are higher, depending upon its hardness. The limit of elasticity is not fixed, on account of the compromise on the admissible remaining elasticity and because of the widely differing properties of the timbers used. Messrs. H. Dorner and E. Heller, who were responsible at that time for the strength of airplanes, advocated the adoption of an elastic limit for timber of about 45 per cent of the ultimate strength or, expressed as a load factor, of double the load.

They reasoned that the ultimate strength would be $2\frac{100}{45} = \sim 4.5$ of the load. This method can also be used for timber having a limit of elasticity below 45 per cent. If the value of the bending stresses is substituted for the tension stresses of a spar, the ultimate strength and at the same time the bending load will not be in proportion to, but will increase more rapidly than the load; so that with twice the load a tension stress of not quite $\frac{2}{4.5}$ times exists. Thus the elastic limit is not as yet reached.

This 4.5 times the load was used in calculating and testing airplane wings until a revision was felt necessary. The BLV of 1918 contained the following instructions:

Stipulated load factors.

Load.	Case.	E and D airplanes.	C and G airplanes.	R airplanes.
Pulling out force	A	5.00	4.50	4.00
Gliding flight force	B	3.50	3.00	2.50
Frontal pressure force	C	2.50	2.00	1.50
Upward pressure force	D	3.00	2.50	2.00

The subdivisions according to different airplanes were dependent upon their weight and size. As an exemplification, the differences of the airplane classes in name and type are given in Table II. The position and direction of the forces in relation to the wing section are represented by Figure 10.

The amount of resistance due to air forces is different. In case C it is taken as smallest, in case D and B as greater, and in case A as the greatest. These designations are necessary, case C being a dive, in which the final limiting velocity is reached and never surpassed. By turning the airplane out of this position, retardation and a load increase takes place. The highest pressures can occur in case A only having a high lifting force resulting from a great angle of attack; whereas at the same time the wind pressure has not decreased sufficiently on account of the still high flying speed of the preceding flight evolution.

These directions were followed until the spring of 1918, at which time the introduction of the BLV of 1918 occurred. This issue contained in most part the directions of the BLV of 1916 and required, for the calculated failing strength of the wings, at least the factors as shown in the following tabulation (total weight minus wing weight):

Load factors for calculating purposes.

Calculation class No. at time of publication of 1918 BLV.	Stipulated load factors.			
	Case A (pulling out).	Case B (glide).	Case C [1] (dive).	Case D (flying upside down).
I. Airplane with full weight over 5,000 kg.	3.5	2.5	1.2	.....
II. Airplane with full weight, 2,500 to 4,000 kg. (useful load, 1,000 to 2,000 kg.)	4.0	2.5	1.5	.....
III. Airplane with full weight, 2,500 to 4,000 kg. (useful load, 800 to 1,400 kg.)	4.5	3.0	1.75	2.5
IV. Airplane with full weight, 1,200 to 2,500 kg. (useful load, 400 to 800 kg.)	4.5	3.0	2.0	2.5
V. Airplane with full weight up to 1,200 kg. (useful load up to 400 kg).	5.0	3.5	2.0	3.0

[1] Only for frontal pressure, not for turning moment.

These regulations were an improvement in that the airplanes were classified according to their total weight, the use to which they were put differing on account of the different load factors in the assumed load cases. In new types the classification was made in accordance with the Army regulations, when ordered. In this way it was thought possible to compensate sudden changes in the weight of the airplanes and to place those airplanes which had to perform a certain task in the proper group.

The classification, according to groups, was begun with the heaviest airplanes, with the assumption that it would not be necessary in the future to figure on smaller load factors than those for this group.

With airplanes of Classes I and II the load case D (flying upside down) was to be neglected and instead it was required that the effect of the mass when landing should be taken as six times the wing weight, in making strength calculation.

The instructions for calculating loads assumed that the strengthening effect of the covering, reinforcing members, and ribs on the spars could be disregarded.

This assumption contains a special factor of safety and a strengthening of the wings which does not find expression in the figures. Due to this strengthening effect, found in testing the wings, an increased load is justified in the three cases A, B, and C, in which this effect is especially pronounced. In case C no increase is justified, since a higher calculated frontal pressure is required with reference to the inner bracing of the wings and since the strengthening effect of the covering on the wings loses its importance, on account of the great warping stress.

The 1918 BLV required, furthermore, that the load factors for case C should be taken only for the frontal pressures, in order to secure sufficiently strong internal bracing for the wings.

However, the moments exerted in case C were to be introduced into the calculation for supporting surfaces without introducing a multiplying factor. By this last specification the restriction imposed on aerodynamics by the arbitrary assumption of the air force C at a distance of two-thirds of the wing chord below the wing chord, according to the BLV of 1916, was removed without intensifying the previous ideas of a sufficient static strength. In Figure 29 the resolution of the force C into two wing forces is shown.

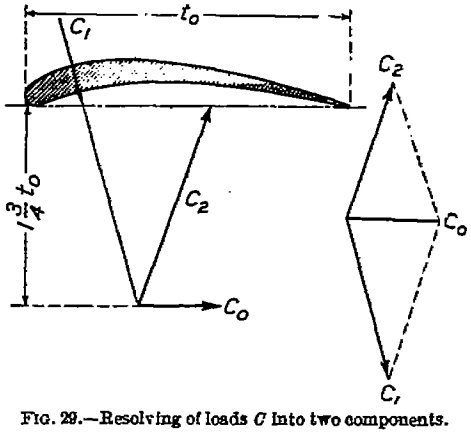

FIG. 29.—Resolving of loads C into two components.

The change of the load factors with varying angle of attack for the different classes is shown in Figure 30. This illustration is based upon the often used example, or which the angles of attack belonging to the load cases had been computed. The fixed points were connected by a straight line causing an abrupt bend in the curves.

Case C is very inconvenient for the determination of strength; therefore proposals for its modification were not lacking. The best proposal was that which endeavored to fulfill more exactly the aerodynamic requirements. In cases A, B, and D the air forces, acting on the fuselage, tail unit, and supporting structure is trivial compared to the air forces acting on the wings. In case C, however, this "detrimental force" is considerably higher and can not be ignored in considering air forces on the wings. The method of dividing the total air force, the so-called detrimental force, and the wing force, between the wings and the structural parts, brings the desired improvement for case C. When this method is followed, it must be considered whether or not it will be necessary to increase the load factor so that the load will not exceed the elastic limit. Thus the same conclusion was reached as prescribed in the BLV of 1918, requiring that the wing moment should be computed without the frontal load on the wings, in order to obtain a better internal bracing effect with a multiplying factor.

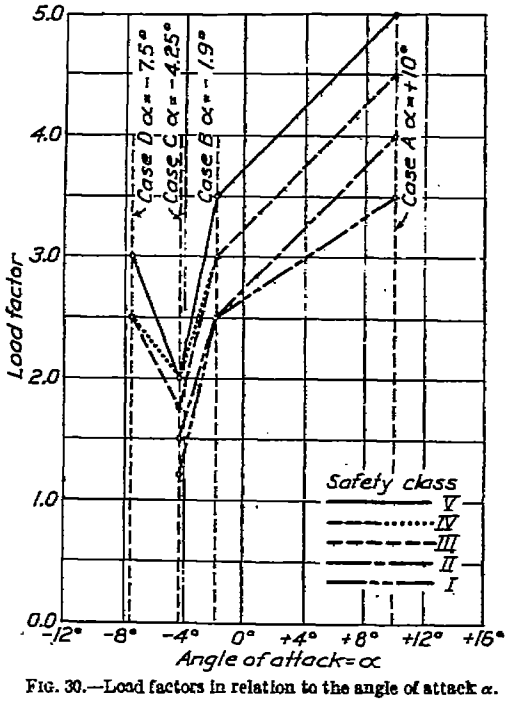

FIG. 30.—Load factors in relation to the angle of attack α.

The air forces of the wings act directly upon the wing coverings. The coverings, made usually of impregnated linen and rarely of laminated wood or aluminum plates, require no strength regulations based on aerodynamic calculations. It is only asked that the coverings put on the ribs fulfill the requirements concerning the cross-sectional area necessary for the aerodynamic effect, as well as the transferring of the air forces to the wing ribs.

Next to the covering, the wing ribs are the bearers of the loads which result from air forces, consequently, the ribs must be designed so as to be able to carry these loads. Furthermore, as the ribs are exposed to damage and, if built according to calculation only, would generally have very little strength, the BLV contains instructions to the effect that the moment of the load, case C, must be increased 50 per cent for rib calculations.

The calculation of the ribs has to be based on Figure 15. The loads given there have to be multiplied by a factor of the proper calculation class. In Figure 31 the magnitude of the loads

of Class V are shown. Attention is called to the nearly identical values of the load on the rear two-thirds of the wing chord in all cases. This effect has been obtained through high-load factors in case A and small ones in case C. Again attention is drawn to the immense increase of the load upon the leading edge in case C.

2. TAIL UNIT.

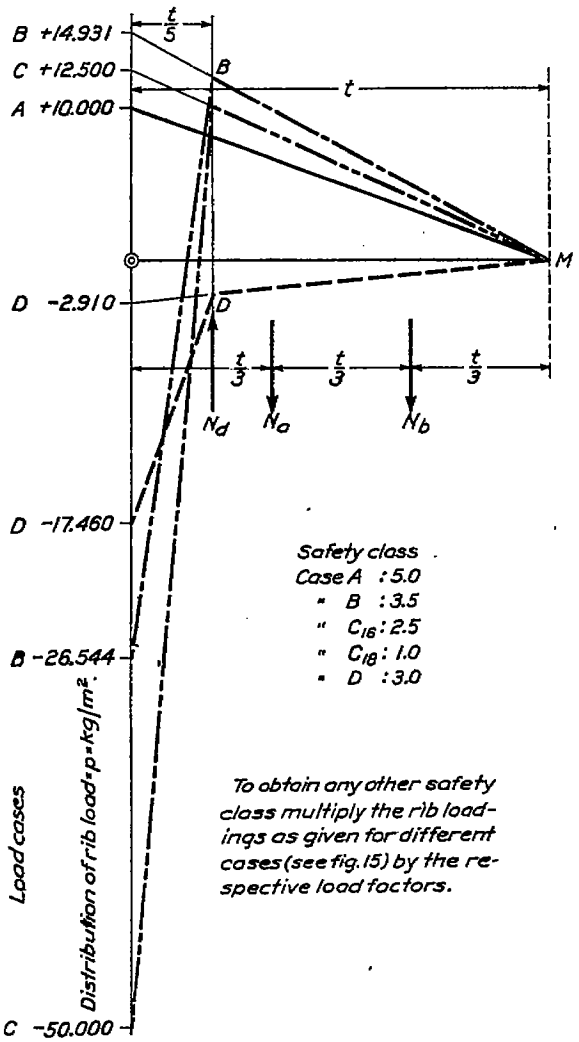

FIG. 31.—Loads for strength calculations of ribs.

The BLV of 1916 contained the first instructions on the strength of the tail unit. They were intended mainly as a basis for strength tests and less for calculations. The assumption was also made that the rudders are carried by the fin and consequently the loads on attached rudders are also included in the fin loads.

Stipulated breaking strength of rudders and fins.

	kg./m.²
Fins (alone without load on attached rudder)	300
Rudders attached to fins (without load on fins)	150
Rudders not attached to fins and not balanced:	
E and D airplanes	200
C, G, and R airplanes	300

The loads are to be figured for the area of the tail unit. The instructions in the BLV of 1916 presented a method which, neglecting the qualities of the wings, the location of the center of gravity, and the fuselage length, used only the product of the air pressure, air-force coefficient for the tail unit, and a safety factor.

The requirements for E and D airplanes are based on practical experience with E airplanes and derived from damages to the rudders during flights, which were doubtless the result of the air forces. The greater requirements for C, G, and R airplanes were based on the assumption that the greater moments due to the greater inertia of heavier airplanes would, with the same flight evolution, cause greater turning moments on the tail unit and thus higher specific loads on the surface. This assumption, however, proved to be incorrect, and the loads for G and R airplanes had to be reduced considerably.

The BLV of 1918 and also of 1916 based the strength of the tail unit on a surface load.

Load on the fins, rudders, their connecting parts and stays per unit surface:

For Classes I and II, 200 kg./m.²

For Classes III, IV, and V, 300 kg./m.²

These figures contained an addition of 50 per cent to 75 per cent for special stresses, due to handling on the ground, or the effect of the propeller slip-stream.

In the calculation of the fuselage the true loads of the tail unit, which were assumed to be of a lower value, were to be used as follows:

For the average loads on the unit area of the tail surfaces the following values are to be taken:

	Class.				
	I.	II.	III.	IV.	V.
Average surface load (kg./m.²)	120	120	150	180	200

The load on the aileron surfaces must be taken as 200 kg./m.²

These values for the surface load of the tail unit, which are the products of air pressure air-force coefficient, and the safety factor, are derived entirely from experience. It is interesting to know the factors of this product. From the tabulation of Munk it can be seen that the value $c_{ah}=0.7$, which may be regarded as a high coefficient for tail units of common shape. Assuming a safety factor of about 2, a value of $\frac{1}{1.4}$ for the load must be introduced into the above tabulation as the mean air pressure of the class. With a specific density of the air $\frac{\rho}{g}=\frac{1}{8}$ kg. sec.²/m.⁴, this would correspond to about the following velocities:

	Class.				
	I.	II.	III.	IV.	V.
Velocity (km./hour)	135	135	150	165	175

The special emphasis on surface load in German tail units has led to the conclusion that their dimensions were obtained more from the consideration of favorable strength conditions than from the laws of aerodynamics. The method of construction, characteristic of German airplanes, namely, short span and long chord, is the result of this tendency. Proposals to avoid this drawback were not lacking.

It is feasible to base the strength calculation on the tail-unit moment which opposes the wing moment. It had been shown that the total air force acting on the horizontal stabilizer and elevator is given by the ratio:

$$Q_h=k\frac{t}{a}G$$

and that the maximum value for k can be taken as:

$$k_{max}=1.3$$

Although in load case C of the wings, for which this value of k_{max} holds good (no safety factor being used in computing the moment), it is well, when calculating for the tail unit, to use a small safety factor. It is conceivable that in the position which corresponds to case C, a movement of the rudder may take place involving a higher stress on the tail unit. With a safety factor of only about 50 per cent, the breaking load becomes

$$Q'_h=1.5\,k_{max}\frac{t\,G}{a}=c\frac{t\,G}{a},$$

in which c has a value of about 2.

The numerous tests on the elevator and stabilizer of airplanes which had proven a success in service make it possible to determine the value of the factor c.

In Figure 32 the factor c, obtained from strength tests of a number of military airplanes, is given in relation to the total weight G of the airplane. For G airplanes the c values were obtained by calculation, there being no test data.

Go G IV ..... $G=3{,}520$ kg. $c=0.57$
Fdh G IIIa ..... $G=4{,}935$ kg. $c=0.725$

With R airplanes from the factory in Staaken the following values were taken from calculated strength tests:

$$G = 13{,}000 \text{ kg.} \qquad c = 1.36$$
$$G = 14{,}500 \text{ kg.} \qquad c = 1.22$$

The great variation of the c values is not surprising when it is considered that the strength of the elevator and stabilizer was found according to other than the above-mentioned principles.

From this tabulation the following general conclusions can be drawn:

(*a*) Airplanes of similar construction, coming from the same factory or the same designer, have c values which correspond closely. This is probably due to the aversion to depart from the tested combination of wing chord, fuselage length, and size of tail units.

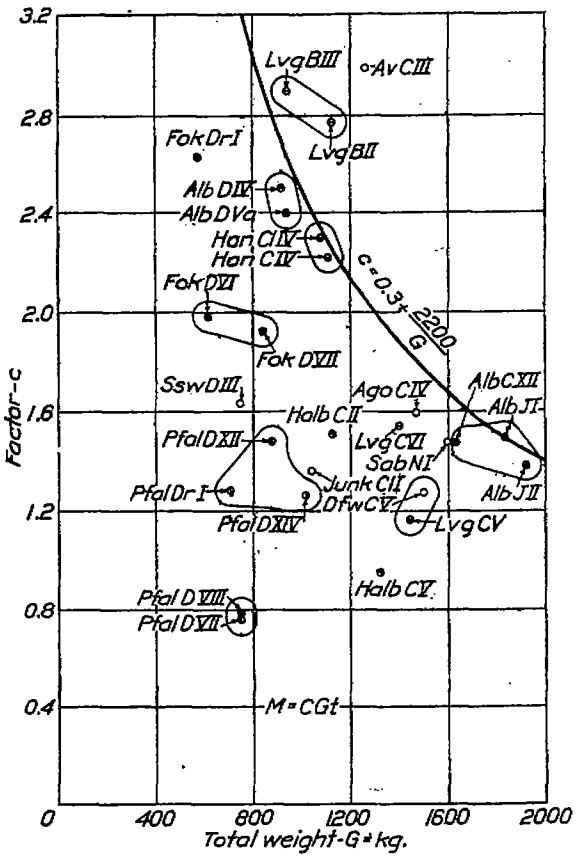

FIG. 32.—Factor c in relation to total weight G.

(*b*) With lighter airplanes a higher c value can be used, a fact which corresponds to the claim that a better maneuverability and a higher strength is necessary for this type of airplane. The high c value of the Staaken R airplanes can be explained by the fact that the tail units were not built on the basis of a fixed surface load, but according to the reasoning which originated from the preconceived migration of the center of pressure of the air forces on the wings. The B airplanes of the LVG do not fall under this head on account of their large tail units and long fuselages, as likewise the airplanes of the Pfalz airplane company, on account of the small size of their tail units.

(*c*) Since the tabulation gives the result of strength tests, which for the most part were successful as regards strength requirements and during which exceptional damages were not evident, it is obvious that most of the c values are really higher.

For airplanes similar to the old military airplanes in arrangement of wings, center of gravity, tail unit, maneuverability, and speed, the following empirical formula, in consideration of paragraph (*c*), can be written:

$$c = 0.3 + \frac{2200}{G}$$

This formula holds good for airplane weights between 800 and 5,000 kg. It is plotted in Figure 32 and shows that most experimentally obtained c values are lower than those calculated from the rule.

The value $c = 2$, taken from the wings of case C, is reached, according to the above formula, only for the airplane weight of 1,300 kg. The other c values of the formula, especially those of the strength tests, lie considerably below this figure in case of greater airplane weights. From this result, it may be concluded that the required wing moment has been taken much too high for greater weights. Even for airplanes of less weight the moment appears too high, since Figure 32 shows that many light airplanes which have given no cause for complaint regarding strength, possess small c values. It is therefore entirely permissible to reduce the requirements for wing strength, on the basis of experience with the strength of tail units.

The limit given above for the unit load on the surface of the tail unit is obtained by the ratio previously mentioned in the second section of the discussion of the air forces acting upon the airplane in straight, unaccelerated flight, the ratio of which must, however, yet be multiplied by a safety factor.

$$\frac{Q'_h}{F_h}=\frac{c_{ah}}{c_g}\frac{G}{F}$$

For an airplane of the strength Class V, let $\frac{Q'_h}{F_h}=200$ kg./m.² according to instructions. Take the unit load on the wing surface as $\frac{G}{F}=50$ kg./m.² and the factor of safety as 2. Then $\frac{c_{ah}}{c_g}=2$ is not a high value.

In the section of this report just referred to, different load cases for the wings are proposed. If the total air force Q_h has been obtained in any manner, it is necessary to use the full value Q'_h static load = ultimate strength, for cases A and B, but for cases C and D one-half of that value must be used. For most airplanes any subdivision of the cases is not necessary, and only cases A and B must be considered.

The stipulations for the strength of the empennage are closely related to those for the rudders, the control wires, and their fittings. If the calculation is based on the rudder load, all steering parts, down to the hand or foot bar, must take up this load. This requirement often leads to technical impossibilities in case the rudders, on account of wrong aerodynamic assumptions of the distribution of the air forces, receive greater loads than the aviator can exert. If the rudder is taken as the origin of the calculation, its strength is decisive for the dimensions of the steering parts and fittings. With German airplanes having balanced rudders, a breaking load of 80 kg., on the control stick or handwheel, was adopted. With handwheels the force was thought to act eccentrically and the steering parts were dimensioned accordingly. With every operation of the rudder, a yielding of the wires and their fittings must be taken into account. The greatest strength is without value, if the steering parts are so flexible that the rudder can not be operated properly under the heaviest load. In consideration of this possibility, instructions were issued that, with full load on the rudder, it must be possible to deflect it to either side.

III. OTHER CONSIDERATIONS IN THE STRENGTH OF AIRPLANES.

(a) THE LANDING GEAR.

If the airplane is on the ground, it has to be treated as a rapidly moving machine. The wings lose their importance and begin to act only with higher rolling speed or with wind. The most important part of the landing gear is the truss, which has been developed nearly everywhere in the course of time to the same shape as that in use to-day. It is attached to two supporting points provided across the fuselage and situated a little in front of the center of gravity of the airplane. The third supporting point, the tail skid, has to carry a load only when the rolling speed is low. The fuselage between these supporting points withstands the longitudinal stresses created by taxiing.

The loads upon the landing gear depend upon many conditions: airplane weight; arrangement of the truss in reference to the center of gravity of the airplane; wheel diameter and gage of the wheels; the latter being of the same importance as the state of the ground and the rolling velocity.

The landing gear and the tail skid have to fulfill a duty independent of that of the wings and empennage. Both are exposed to heavy shocks, which can lead to damages. Consequently the following fundamental rule was inserted at an early date, in compliance with the Army requirements.

The landing gear is not to be a part of the fuselage truss work on account of exposure to damage.

The tail skid is not to be an inner part of the fin work.

It was the intention to eliminate such construction of wings and empennages in which the supports of the landing gears were utilized, in order to increase the height of points of suspension, as the security of the landing gear and also the strength of the wings and the empennage were endangered thereby. With German seaplanes and giant airplanes this requirement could not be fulfilled. However, precaution was taken to have wing parts, which at the same time were parts of the landing gear, built especially strong so that they would not fail in case of damage to the landing gear.

Furthermore, in order to protect the wing structure against damages the following instructions were issued.

"Parts which will safeguard the fuselage truss structure must be installed at connections for landing gear."

These safeguarding parts were so designed that they would break under excessive loads and thus protect the more valuable parts of the wings and the fuselage. The Rumpler and Fokker companies produced these safeguarding parts very successfully.

Special attention must be given to the springs of the landing gear, requiring that in compression or tension they must have a range that will prevent reaction shocks or an excessive elongation which might allow the propeller to touch the ground. Not considering the compression of the pneumatic tires, a length of 10 to 15 cm. is required, according to the BLV, as the correct range for the compression of the springs. The materials used for the springs were rubber or wire spirals. Both become weak and defective when used a long time. In reference to instructions as to spring movement, the BLV of 1918 gives the necessary height of the propeller circle above the ground.

With a tractor propeller the distance of the lower edge of the air screw circle, in case the wing chord near the body is horizontal, has to be at least 20 cm. from the ground.

With pusher propeller the same distance is required in case the tail skid rests on the ground. Exceptions will have to be agreed to, when tests of the type in question are made.

In the beginning similar instructions were given for air screws with axis running horizontally. This, however, was incorrect, as the position of the air screw when moving over the ground is dependent on the angle of attack of the wings and their distance from the wheel axis. The start takes place with a small angle of attack in order to obtain a low wing resistance, therefore the position of starting is chosen for tractor propellers in which the wing chord runs horizontally.

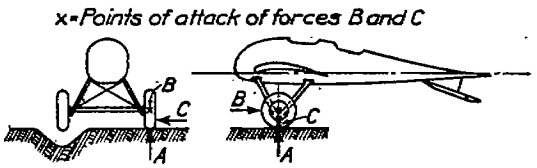

FIG. 33.—Loads on landing gear.

The lower the useful load of an airplane the greater can be the angle of attack of the wings when starting. Some pursuit planes with low useful load could be equipped, therefore, with landing gears of lighter weight than is required in the above instructions. With airplanes having pusher propellers, naturally the starting position of the airplane does not have to be considered to such an extent when determining the height of the air screw. In these airplanes the position of the dropped tail support is decisive.

Reliable data for the energy absorbed by the landing gear were obtained from experiments with proven landing gears, in which the following method was used.

Energy in kilogram-meters absorbed by landing gear; with pneumatic tires = total weight of the plane in kg. × 0.18 m. With substitute tires = total weight of the plane in kg. × 0.26 m.

The average energy taken up by the tires is calculated accordingly, with full weight of the airplane in kg. × .08 m. For substitute tires, in which the spring effect was seldom appreciable, it was generally assumed that no energy was absorbed.

It is difficult to determine the direction and magnitude of the forces acting upon the landing gear. Forces on successful landing gears were studied, and as a result the three following load cases were assumed (see fig. 33):

Upward force at one side (force A);
Longitudinal force from front at one side (force B); and
Lateral force at one side (force C).

The forces A and B as well as A and C have to be assumed as acting simultaneously. The assumption, however, is only a little more severe than if all forces are taken as acting simultaneously. According to the BLV of 1918, at least the load factors (the static wheel load) (with two-wheel airplanes and half the airplane weight) as given in the following tabulation have to be considered:

Force.	Factor of the static wheel load.
A	6
B	4
C	0.6

The instructions for landing gears can also be applied for the tail skid and for the additional secondary wheels in front of the main wheels as used by some of the giant airplanes. The BLV of 1918 require also that when calculating the energy, the landing shocks of the suspended or rolling landing gear have to be taken into consideration. These instructions did not determine the magnitude of the loads. They took the place of the rule laid down in the BLV of 1916, which could not be applied to many airplanes and which mentioned that the energy taken up by the tail skid should be equal to at least one-eighth of that of the landing gear.

(b) THE FUSELAGE.

The airplane fuselage carries the pitching surfaces as well as the fuel and the crew. It serves also as connecting member between the wings and empennage. It has to be stiff enough to resist bending or twisting and of sufficient strength to withstand landing shocks. The important military arrangements for observation, attack, and defense require numerous openings detrimental to the strength of the fuselage. Every opening necessitates a careful examination as to its weakening effect upon the fuselage structure. The BLV demanded adequate strength at the rim of these openings.

All loads must be connected securely to the fuselage structure, especially in the installation of the engines when arranged between the wings and resting on the landing gear.

Damage to the power plant when propeller parts fly off, etc., can also affect the wing structure, and to prevent this it was required that the fuselage parts which support the engine should not be connected to the wings direct, and moreover, engines between the wings are not to be installed in the supporting wings themselves.

The arrangement of the engine supports, according to the BLV, had to be made so that shocks would be transmitted uniformly to the engine and that changes in the shape of the fuselage or the wings were not to affect the engine. A shifting of the engine on its base, especially when the airplane tilts, was to be made impossible.

This decision was made especially to protect the crew in airplanes with engines arranged in the rear. It was also of importance for engines in front, in regard to the safety of the crew.

Aside from this, another difficulty was experienced with pursuit planes of the lighter type in that the mechanics when working on the airplane would damage important parts of

the fuselage which might afterwards cause a rupture of the fuselage while in the air. To avoid accidents of this sort it was required that sufficient supporting points, without decreasing the strength of the fuselage, should be arranged and equipped with handles where necessary.

Further instructions of the BLV were: When lying upside down upon the ground after nosing over it must be made possible for the crew to escape from the airplane quickly. This caused an investigation as to the strength and aptness of king posts, wings, and other arrangements necessary as a protection for the crew. A weight six times that of the fuselage was considered as acting from above, and calculations were made accordingly. With very many types of airplanes the upper wing and the tail plane served in a measure as a safeguard for the crew when the airplane capsized.

The first calculations of the fuselage were based upon the full loads on the elevators and the tail plane, taken separately, and half their combined loads.

The load for the strength calculation of the fuselage, according to BLV of 1918, included the loads on the empennage acting simultaneously and in full magnitude. This requirement is very severe and is justified only in war airplanes for aerial fighting, where violent airplane movements are experienced and which act upon rudder and elevator at the same time. These loads do not have to be regarded as standard for commercial airplanes, when it is necessary to avoid the generally insignificant increase in load due to the dimensions obtained by calculation from the simultaneous full load on the empennage.

Ordinarily the wings are connected to the struts belonging to the fuselage. The wing shape can not be altered very much, so the best possible rigid structure is necessary.

The compartment for the occupants must be built stronger than the adjoining parts to insure additional safety. Wooden parts, on account of splintering, must have coverings of some sort. This method is of value only when the covering material is of sufficient strength. The loads on the seats, according to BLV of 1918, with due consideration for the effect of inertia, are to be assumed according to the following values:

Class I and II, at least 200 kg.
Class III and IV, at least 300 kg.
Class V, at least 400 kg.

Besides this, it is required that the strapping arrangement provided shall be connected to the fuselage in a manner that it will safely withstand a tension of 300 kg.

With commercial airplanes, which are not to be exposed to violent movements, this requirement is for the pilot only. The pilot is to have, in addition to this strapping, a reliable foot support for use when making sudden and precipitated landings. The BLV required, therefore, that the foot steering gear should withstand a force of 300 kg. upon either side, distributing same to the connections of the fuselage.

Special care has to be given to the connections of the fuel tanks. As to the arrangement of filled tanks, according to the BLV of 1918, the following factors for filled reservoirs are to be used in the direction of the axis running parallel as well as perpendicular to the longitudinal axis of the airplane:

Class I and II, 8.
Class III, 15.
Class IV and V, 20.

This severe requirement was reasonable only if the tanks should also withstand the effect of inertia due to the liquid, without leaking. The requirement is the result of accidents in landing, where the exploding fuel tanks, often located under the pilot's seat in German airplanes, had killed the occupants. The remarkably high load factor of the upper class could be required, as their use did not cause structural difficulties. With airplanes to which this does not apply, the strictness of the requirement can probably be lessened without giving any chance for danger.

IV. ANALYSIS OF THE STRENGTH QUALITIES OF THE BUILDING MATERIALS.

Reliable knowledge of the prevailing loads and of the strength qualities of the building material is of equal importance in safe calculations of strength. The manufacturer of airplanes finds in the numerous test methods of the materials, introduced in other technical lines, nearly everything he needs. He has to be assured, however, that the working outfit is equipped with the very best testing tools and will guarantee the production and use of uniform raw building materials.

The German airplane industry still has no standard rules for the qualities of the materials like those of foreign countries published by the International Aircraft Standard Boards.

This need not be surprising, considering that the output of airplanes during the war had been developed to such an extent that toward the end about 2,000 airplanes were being made monthly. Forced by necessity, the requirements for quality were lowered, but in so doing many good discoveries were made. While good airplane factories before the war thought that the wing spars could be made only of American silver spruce, sanctioned by tradition from the time of the Wright airplane, or, if that were not available, ash could be used. They learned afterwards, however, that German coniferous woods could be used just as well. To-day there is no necessity for using imported timbers in German airplance construction. When good birch veneer became rare, those of alder wood and aspen trees were used, although not with the same success.

In the beginning the use of seamless drawn steel tubing was thought absolutely necessary. When it was impossible to furnish enough seamless drawn tubing it was soon found that for many purposes welded tubing could be used. It became necessary, several times, to lower the specifications for steel and other materials. This caused the pessimists of the country to predict a serious reduction in strength and a consequent loss of the war.

In spite of the conditions unfavorable to the development of standards, some experience which can be utilized in passenger airplanes was of value and should be recorded.

(a) TIMBER.

The BLV of 1918 required that:

The timber to be used must be dry and of best quality. Wood used for spars, stays, and struts must be seasoned and at least one year old. For a better drying effect, the wood must remain until it can be worked, either for three weeks in ventilated warm workroom or for six days in a drying room. A too rapid drying is detrimental to the wood. Special attention must be paid to the direction of the grain (deviations of more than 7° to 10° in any direction are not allowed). The wood has to be free from knots, cracks, and resin glands. It may have a light blue color in a few small spots, but with greater and darker blue-colored spots it becomes unfit for airplanes. Timber with other defects, even to the smallest extent, such as "Rotfäule," mildew, dry-rot, and dead resin glands, is to be excluded. Timber with too many resin glands is unfit as it cracks too easily in the veins and the glue does not adhere to it sufficiently.

Strong clear-grained timber of ash, fir, and pine is to be preferred, and the use of meager wood must be avoided. Special attention must be paid to strong grains. Timber cut in the year favorable to its growth is to be preferred; but when selecting, the relation between the strong winter cells and the soft spring cells, in the annual wings, will determine fitness, the ratio being about 2:3.

The use of full piece wood, not weatherproof, or weak timber such as poplar or alder wood, is prohibited. As to use of foreign timber, special permission must be obtained. Regarding domestic timber, the use of ash, pine, fir, linden, and locust wood is allowed; alder wood and birch are to be used in ply wood only.

Plywood to be used for airplane work must be made especially and stamped and classified by the manufacturer. For airplane parts subject to heavy strain (spars, ribs, etc.) plywood designated for this purplse must be used. The plywood must be water-tight and consist of joint-

less round wood veneer. The thickness in the centerpiece must be nearly the same as outer pieces. Every sheet of ply wood must be tested.

The gluing together of solid timber or of ply wood to solid timber must be done by the cold gluing process, which must be allowed to dry at least 24 hours under clamp pressure before it can be worked. Hide glue is allowed only when the glued part is properly warmed during the manufacturing process and when completely covered by other wood or by waterproof material, so that the dampness can not reach it.

Highly strained and bent parts are to be made of single strips, glued together and brought into bent shape by pressure. Glue, in corners of parts joined together, is not to be removed. No foreign material such as linen is allowed between glue and wood.

The surface of the timber must be made durable under the effect of the weather, especially at the glued portion. The wood on the outside must be painted with spar varnish.

As to construction of wooden parts, the following recommendations were received verbally from the BLV in 1918, and are quoted as follows:

Spars, longerons, and struts must not be drilled through, if it can possibly be avoided. Where holes are absolutely necessary for bolts, a reinforcement of some kind must be used. Every reinforcement must be enlarged at the end or rounded off so that the attacking forces will be distributed. The total cross-section of the reinforcements must equal that of the hole. The pierced member must be sheathed in order to prevent splitting.

Spars, longerons, and struts must not be made out of one single full piece, but must always be glued together lengthwise out of at least two pieces and in such a way that the forces acting in the wood are balanced, i. e., the right side has to be glued in such a manner to the right side of the other part, that heartwood touches heartwood and sapwood touches sapwood. Under all circumstances the holes must be bored with a boring jig before erection.

Splices must be in the form of a wedge (scarf joint) having a slope of 1 to 12 and glued together. The direction of the forces, when a splice is used, must be parallel to the surface of the slope. Splicings in adjacent members must be separated by a distance equal at least to one splice in length. Splicing must not be used at points subject to strain, but must be arranged as shown on the working drawings. If channeled pieces are to be spliced, the channeling must be omitted at points where the splicing occurs and also for a distance of 5 cm. to either side of the splice. When parallel members are glued together the channeling may be continued in portions of one member opposite the splicing in the other.

Plywood must be overlapped a distance equal to at least 25 times its thickness, and in no case less than 40 mm. An exception to this will require special permission.

Wrapping or covering is required for all wooden parts near seats as a protection against possible injury from splintering (plywood fuselage covering excepted) and also for landing gear struts.

All spars, longerons, and struts must be securely joined by shoes, sockets, or recesses against moving or turning.

This extract from the BLV of 1918 requires no explanation. Instructions regarding foreign timber and the stamping of plywood were made for war purposes and are to-day of no value on account of the small output. Tests on spliced spars determined that routing could be continued through the splice. Although this result, confirmed in other ways, favors through-going channeling, it must be clearly understood that the saving in weight is generally insignificant and that this continuous channel is justified only as a manufacturing necessity.

A satisfactory strength and elasticity factor for calculations of timber can be obtained only through frequent tests. Samples of wood which are to be used for members subject to compression and bending must first be tested in accordance with instructions given in the BLV of 1918, as follows:

A section of spar corresponding in length to one compression bay is loaded eccentrically by the force S at the distance a.

The eccentricities are chosen to give the equation:

$$M_{max}=\frac{Sa}{\cos\left(\frac{l}{2}\sqrt{\frac{S}{EJ}}\right)}$$

In this formula E is assumed as 140,000 kg./m.² and M_{max} as to the value obtained from rough calculation.

A more exact value for E is obtained from the greatest deflection measured at the middle of the spar with a breaking load on the strut (fig. 34), according to the equation:

$$\cos\frac{l}{2}\sqrt{\frac{S}{EJ}}=\frac{1.0}{1.0+\frac{\delta_{max}}{a}}$$

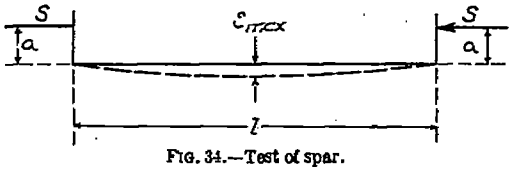

FIG. 34.—Test of spar.

(b) METALS.

The chief property required in sheet metal for airplane construction is high tensile strength. It must also endure bending while cold and weld autogenously. High strength values are generally not as important as ductility, requiring at least 20 per cent elongation.

The BLV of 1918 required that plates less than 1 mm. thick must not be welded when used in members subject to heavy stresses. In the case of members under tension welding is forbidden.

The requirement of the BLV very often was not followed, and yet no trouble was experienced; the Fokker airplane factory, for instance, sent many hundreds of airplanes to the battlefield without experiencing any accidents. Welding depends largely upon the ability of the workmen and is admissible only when done by competent welders.

Joints at important points of cables in tension were made by splicing the several strands. This material was given preference over single wires, and was frequently used in England on account of its flexibility and the advantage afforded for the formation of eyes.

The strength of a single strand of this cable must not be taken too high, due to its brittleness. Strength values of 200 and 220 kg./mm.², with an elongation of 1 per cent for single wires have been used successfully. The elastic qualities of the cables depend upon the preceding test, but are to be carefully verified through strength calculations. Such cables which are used for the controls and are run over pulleys were given a lower strength value. It was thought necessary in this connection that the single wires should have a strength of 180 to 200 kg./mm.² and an elongation of 2 per cent. In fuselage and wing structures and in framework which is seldom disassembled, wires of the following properties were used: Strength values of 140 to 160 kg./mm.² with an elongation of 5 per cent.

In the construction of German airplanes the use of duralumin became more general. This alloy, consisting chiefly of aluminum, was sold under the name of duralumin by the Düren Metal Co., Düren (Rheinland), and also as Berg-metal by Carl Berg, Eveking (Westfalen).

Its composition, besides certain impurities, is:

Aluminum, 95.5 to 93.2 per cent.
Magnesium, 0.5 per cent.
Copper, 3.5 to 5.5 per cent.
Manganese, 0.5 to 0.8 per cent.

A mixture of lead, tin, and zinc unfavorable to durability, are not contained in duralumin. The specific gravity, according to the alloy and hardness, is 2.75 and 2.84. The qualities of duralumin depend largely upon treatment while it is warm, during the process of manufacture, and while it is being worked. Its strength value is about 35 to 40 kg./mm.^{2}, and the elongation about 10 to 15 per cent. The elongation limit value is very high, about 28 to 32 kg./mm.^{2} The modulus of elasticity is about 600,000 to 700,000 kg./cm.^{2} Sheets of duralumin, especially when about 1 mm. thick, are very brittle and sensitive to frequent bending. Plates which are exposed to vibration should not, therefore, be made of duralumin. For structural parts which are subject to a heat of more than 100° while being worked the use of duralumin can not be recommended; in fact, it would be dangerous. Cold does not have a bad effect upon duralumin. Working parts which are annealed in order to facilitate machining are afterwards heat treated and restored to the original qualities. Duralumin can be brought in contact with iron or steel without danger of electrical decomposition.

For less important structural parts a very light alloy composed of magnesia and aluminum, "electron," manufactured by the Chemical Works, Griesheim, has been used. With electron the difficulties are the liability of fire in the turnings and also its inconsistency under weather conditions, the latter being remedied only by use of a very good varnish. Electron in larger and more solid pieces, however, is fireproof.

(c) FABRICS.

These materials were nearly standardized. The specifications originating during the first year of the war, and maintained throughout, called for a tensile strength parallel to the spars of at least 1,000 kg./m.[1] and parallel to the ribs of not less than 700 kg./m. before doping. As the woof is stronger than the warp, the woof is usually placed parallel to the spars and the warp parallel to the ribs.

As soon as the impregnated material placed over the ribs became dry, the doped fabric took up the main tension. The more the elastic properties of the material approaches that of the doped, the greater will be the tension carried by the fabric. Therefore, the elastic value of the fabric must be kept very low. Prior to 1918 it was the rule that the elongation of the unimpregnated material should not exceed 7 per cent and that the doped fabric must yield to an elongation of 2 per cent without cracking the dope film.

A. Pröll in numerous tests based upon previous investigations by Haas and Dietzius, published by the ZFM and the TB, took up the matter of requirements for fabrics and doping materials.

He came to the conclusion that, for an airplane with a factor of safety of 5, the maximum stress exerted on the most subjected portion of the covering, under the most unfavorable conditions, will be 700 to 800 kg./m.

It is preferable to calculate for fabrics on the basis of a factor of safety of from 6 to 8, so that a tensile strength of 900 to 1,200 kg./m. can be assumed for the doped material. As the strength of the raw materials used up to the present time increases from about 40 to 75 per cent if coated five times, giving the doped material therefore a strength of about 1,600 to 1,800 kg./m., it is feasible to take the strength of the raw material below the adopted figure of 700 to 800 kg./m. It can not be said as yet how much below that figure the strength can be taken, as commercial airplanes are using a somewhat higher specific load upon the surface of the fabrics, which are also exposed to longer and more violent weather conditions than those of the airplanes used in the war. Also, in the case of airplanes not properly cared for, the breaking of the dope film, which reduces the strength of the fabric about a half, must be taken into account.

The fastening of fabric to the ribs requires special attention. In Germany the material at first was only nailed to the ribs, but later on sewing was required at this point. The seams were made in such a way that they could not become undone, even if the thread should break. The pieces of fabric are joined lengthwise, or parallel to the woof, in order to maintain at least

the strength of the fabric alone. According to the BLV, this is accomplished by use of carefully sewn flat seams and by gluing strips of material over the seams.

Important investigations as to seams were conducted by Grüter, as given in the ZFM.

V. CALCULATED STRENGTH OF AIRPLANES.

The basis of the strength analysis is the exact knowledge of the total airplane weight. The Flz had as their guide the following instructions, taken from the BLV of 1918:

The total weight of the airplane consists of the dead and the useful loads.—The useful load is given in accordance with requirements of the Army, as follows:

Occupants with equipment, fuel and oil (with the exception of the oil in the engine housing), bombs, arms with ammunition, radio apparatus, cameras, and special instruments which are not rigidly installed.

All other weights are contained in the dead load of the airplane, such as cooling water, bombing mechanism, fastenings for arms and wireless apparatus, the latter receiving special mention.

The requirements further state that the airplane can be loaded to the highest permissible overload above the stipulated useful load, but this does not apply when figuring strength.

This subdivision was made in accordance with the needs of the troops intending to obtain a wider range of possible loadings. The highest permissible overload was given so that when used in calculations of strength an airplane would be placed in a lower calculated class. This could be done with most of the airplanes without hesitancy, if attention were paid to the fact that during the flight with an overload only those flight evolutions are made which correspond to the lower class.

With commercial airplanes the requirements are different. It is not advisable that pilot, fuel, and oil be counted as "useful load," as this will lead to difficulties in the adjustment tariff and customs. The introduction of the overload creates difficulties in obtaining insurance, as the insurance companies are inclined to consider the safety of airplanes as generally more endangered. For commercial airplanes the following tabulation is given, in which the "additional load" is an approximate substitute for the "useful load" used for Army airplanes.

Dead load (weight of the finished airplane, including the essential accessories and equipment, without fuel, water, etc.).

Useful load (weight of the crew, of the detached equipment and the fuel (water, fuel, and oil, with full tanks), and weight of passengers and baggage).

Full load (total weight of airplane with maximum authorized load).

The actual airplane weight can be obtained only by weighing the finished airplane. It will always be possible, however, to determine with sufficient accuracy, from the plans upon which new types are built, the weight of the useful load, ballast, power plant, fuselage, wings, equipment, etc., and also the total weight of the airplane.

The total airplane weight, the moments of inertia, the horsepower, and the specific surface load all determine the selection and classification of the airplane. The load limits proposed in the BLV of 1918 are:

Class.	Total load (kg).	Useful load (kg).
I	Over 5,000	
II	Over 2,500 to 5,000	1,000 to 2,000.
III	Over 2,500 to 4,000	800 to 1,500.
IV	Over 1,200 to 2,500	400 to 800.
V	Less than 1,200	Less than 400.

These figures also give an idea as to weights for commercial airplanes if the so-called additional load is substituted for the useful load. Many specialists advocate the building of commercial airplanes with higher load factors. The writer, however, is of a different opinion, as greater load factors necessitate a strengthening of all parts, which is not necessary for commercial

airplanes, as they are never subjected to the same flight stresses as those experienced by the old war airplanes. If, on the other hand, it should be decided to strengthen only the members which are subjected to the greatest stresses, the requirements for commercial airplanes would probably be better met. This, however, would place the airplane in a lower class.

After performing the first part of a strength calculation, i. e., determining the total load and the various other loads and the calculation class, the moments on the wings, the empennage, the fuselage, the landing gear, the steering mechanism, and other structural parts must be computed in accordance with instructions in Sections II and III. These latter results will give the basis for the strength calculation.

The distribution of the loads on the wings must be considered separately for each of the four load cases. The loads in this case do not include the weight of the wings, as it is nearly always assumed that the wings carry themselves. The wings are considered as a load only in cases where the relative position of the power unit is such as to make the wings a part of its structural support.

After determining the general distribution of the loads on the wing surfaces, the load upon ribs and spars are determined. The stresses at the joints of the cells must be taken first, however, with the assumption that the joints will operate in any direction. To attain a more accurate calculation it is advisable to reconsider the assumed loads in accordance with Clapeyron's formulas. In this process the strut forces are sufficiently determined. The graphic or analytic method can also be used.

J. Ratzersdorfer published recently a useful tabulation of literary works relative to German and Austrian airplane statics.

A. von Gries, who succeeded in developing the department of airplane statics in Flz to such an extent as to make it a great institution, and who was its head until the summer of 1917, has published many experiences gained in this capacity in a book entitled "Airplane Statics," the reading of which would undoubtedly be worth while.

Messrs. Bethge and Lewe are preparing a book on airplane statics which will be issued under the title "Manual of Airplane Statics." This work was edited by a former commander of the Flz, Maj. E. Wagenführ, with the assistance of Department of Aircraft and Motor Cars. It is not the purpose of this paper to deal with airplane statics. The references are made merely to show incidentally the development of airplane statics.

The structure of the wings is statically indeterminate for most part. The forces on the compression ribs are also considered, according to Reissner's proposal, as statically indeterminate values. The equations of elasticity effect ordinarily the main wires and the compression ribs only, the elongation and bending stresses in the spars and struts being neglected on account of their small magnitude. The attachments for wings are generally considered to be rigid. For airplanes with many openings in the fuselage, this assumption is not to be taken as absolutely correct. The resulting nonrigidness possible in this case must be thoroughly investigated. If the forces are determined according to the method for statically indeterminate structures, the calculation of the stresses in the wing structure, spars excepted, is not difficult.

The sizes of the antilift or landing wires obtained from the wing calculations are for classes III to V only; or, in other words, a load equal to six times that of the wings must be used. Experience has taught that the section of these wires should not be less than 70 per cent of the corresponding lift wires. This comparison must be made in determining this section.

Until the outbreak of the war it was considered sufficient to assume the spars to be flexible. This was correct for the spars with strongly reinforced joints and fittings. The breaking stresses and cross loads were determined by the following simple equation:

$$M_{max}=\frac{gs^2}{8}\frac{1}{\cos\frac{s}{2}\sqrt{\frac{P}{EI}}}$$

where: s = (cm.) the free length of the spar.

g = (kg./cm.) the cross load on the spar.

P = (kg.) the pressure lengthwise.

E = (kg./cm.^{2}) the modulus of elasticity.

I = (cm.^{4}) the moment of inertia of the section.

With the encouragement of the WGL, H. Reissner and E. Schwerin made investigations as to strength formulas for airplane spars, and the results were confidentially distributed in the summer of 1916 to the German airplane factories and recommended as instructions for the calculation of spars. Reissner and Schwerin used the formulas published by Müller-Breslau for a girder exposed to pressure and cross load and doubly supported, with a definite force acting upon either end.

This important work of Müller-Breslau has become a general theorem in airplane statics. As this publication is out of print, the theories are given in Part VIII (3). Special attention is called to the figures obtained from the Flz tabulations giving γ values which are absolutely necessary for the spar calculation. The values are for continuous spars resting on several supports and are divided into equations which can be called enlarged Clapeyron's formulas.

The correct application of this equation is of particular importance in determining the strength of the spars. Uniform strength in all spar bays is possible only for equal values of α in each bay. In this case inflection points occur at the strut points, and the moments there become zero. Usually the strength varies from bay to bay, and the inflection points do not come at the points of support. The buckling strength can then be determined in the following way, neglecting transverse loads; the determinant of the denominator corresponding to the values of ψ for the different bays must be examined for increasing values of the load factor. When the determinant of the denominator first becomes zero the weakest bay fails. For further increases in the load factor, the determinant of the denominator is either greater or less than zero until the second weakest bay fails, etc. The investigations of the determinant of the denominator for various load factors is necessary, as any result other than zero means either surety against failure or overlapping of the safety range of two bays.

The determinations of the zero value of the determinant of the denominator are only correct if the modulus of elasticity under all stresses is unchanged. This, however, does not happen. The Flz therefore recommended in the BLV of 1918 the use in the strength calculation of a modulus of elasticity obtained from raw material tested nearly to the point of failure. The modulus of elasticity at the breaking point is smaller than that for lower stresses. Consequently, the calculations made with smaller load factors not so near to the breaking point resulted in greater deflections and higher stresses, which in reality do not exist. This condition is a great disadvantage for checking experimentally the deflections of the spars, which are found to be smaller than those computed with the modulus of elasticity at the breaking point. As the Flz has made, regularly, tests on wing strength up to the breaking point and finding the results compare with those computed with breaking loads, less consideration was given to this point. When the costs involved in the regular breaking strength tests made them prohibitive, greater attention was given to calculations, using smaller load factors and their modulus of elasticity.

As the strength calculations of wings are very extensive and consume a great deal of time, only formulas can be used in which the load factor is such as to permit a retesting of the wing by sand loading without causing any damage to the structure. During flight about half the value of the structural strength load is experienced. Such loads are of short duration, however, but in a test the load is sustained for a considerable length of time; therefore a load factor of 40 per cent of the highest factor is recommended for sand tests.

Those structural parts which to a great extent are exposed to damage in shipping, erection, and repairing must have, according to BLV of 1918, a strength that will withstand an excessive stress of 200 kg.

This applies especially to struts, cables, wires, turnbuckles, and connections for wing wires. When requiring an equally excessive strength for all structural parts, regardless of size or dimensions, an exception may be made in the case of parts which on account of their dimensions are subject to less severe stresses.

According to BLV of 1918, the longitudinal force for struts must not only be lower than the value for Euler's failing load, but must be less than half the breaking load. This involves a guaranty that the deflection does not exceed one two-hundredths of the strut length under a load equal to half the breaking load.

This requirement is always fulfilled if the following length s (cm.) does not exceed: $s = A + \sqrt{B + A^2}$

where

$$A = \frac{E}{50\ K_b} h;$$

$$B = 10 \frac{E}{K_b} i^2; \text{ and}$$

E (kg./cm.^{2}) = modulus of elasticity;

K_b (kg./cm.^{2}) = ultimate stress in bending, depending only on the quality of the material; and

h (cm.) = distance between the extreme fibers;

i (cm.) = the radius of gyration, depending only on the geometrical section.

The precaution adopted by Müller-Breslau is necessary, as the initial tension of the cables, in order to obtain a rigid wing structure, is sometimes of greater importance than the air forces themselves. As long as no method was known by which the initial tension could be independent of rigging strains, the danger of overtightening is especially great for the weaker outer struts.

If the length of the compression members is so short that Euler's failing stress rule does not apply, the Tetmayer formula must be used according to BLV of 1918. This occurs if the section of the strut has a radius of gyration such that $\frac{s}{i}$ amounts to 105 for steel and to 110 for timber.

According to BLV of 1918, fittings, plates, connections, turnbuckles, and other parts difficult to replace, are to be designed with greater strength than their connecting wires, so as to make it possible in case of accident to salvage these parts.

VI. STRENGTH TESTS OF AIRPLANES.

The practical tests of airplane strength must prove that the loads multiplied by the load factors for a certain safety class are taken up by the structural parts of the plane. As has been explained in the introduction, Part I, the DVL of Germany had worked out the first fundamental rules for such strength tests. The production of reliable types of airplanes for the Aviation Corps induced the Flz to maintain a specially well-fitted testing station in which wings, fuselage, empennage, steering mechanism, landing gears, and important interior structures of all B, C, D, and E airplanes, as well as of some G planes could be investigated. The test methods used for about 2,000 wings and about 200 airplanes are described in the following paragraphs:

(a) WINGS.

The wing test is the most important and oldest of strength tests and was considered as standard until stress analysis was required by the authorities. When the BLV of 1916 was issued the instructions were given for strength tests. Through a systematic study of the weakest structural parts and by increasing their strength in later designs, the actual strength of the wings was successfully brought above that of required failing limit. This increase in wing strength meant the raising of the specifications which had to be followed in the construction of wings. This was justified, however, as the materials, becoming more inferior toward the end of the war, made it desirable to have higher structural safety.

When the BLV of 1918 was completed the results from strength tests of wings, up to that time, were compiled. According to this issue a wing test had to determine not only the load factor required for wing calculation but also the fracture which would happen after a load limit was reached. This condition, affecting parts used as reinforcements, was not considered in former calculations. As previously stated, the wing fabric covering the leading and trailing edges and extending from rib to rib had a stiffening effect on the structure which, especially in medium-sized airplanes, could become considerable. The magnitude of this effect is difficult to determine.

With the more recent types of airplanes, having a leading edge constructed of plywood secured to the spars, this increase in stiffness will be greater; while with large wings, it is less apparent.

According to the BVL of 1918, the following table for the strength test of wings was considered as conclusive:

Load factors for strength tests.

Class No.	Case A (pulling out of a dive).	Case B (glide).	Case C (dive).	Case D (flying upside down).
I	4.0	2.5	1.2	----------
II	4.8	2.6	1.5	----------
III	5.5	3.2	1.75	2.8
IV	5.8	3.3	2.0	2.8
V	6.5	4.0	2.0	3.5

The DVL published in 1916 the methods used to test the strength of wings. At that time they conducted an investigation corresponding only to about a case A of to-day. The idea for producing an imitation of the natural air forces is followed somewhat, even to-day.

The wings have to be taken as self-supporting; therefore a single load must be introduced, minus the weight of the wings G_F (kg.), as weight G (kg.) of the airplane. In strength tests of wings the air forces are represented by sand loads. The wings for this reason have to be suspended upside down. The weight of the wings therefore acts as a load on the wings. The required load factor V is therefore associated with the above-mentioned quantities in the following relation:

$$V=\frac{P+G_F}{G-G_F}, \text{ and}$$

$$P=V\,(G-G_F)-G_F.$$

Here P (kg.) equals the test load to be distributed over the wings. In this load the weight of all parts which are to be attached to the wings must be included and the load distributed in accordance with instructions regarding air distribution over upper and lower wings (Pt. I).

The arrangement of the sand loads in layers reproduces the magnitude of the air forces and in the adjustment of the angle of the wing chord the direction of the wing forces are reproduced, the height of the sand pile being insignificant in this case. Test sand of a 1.67 kg./m. weight requires for a specific surface load of 40 kg./m.² with $V=5$ a mean height of only 12 cm. This low height of the sand renders if difficult to demonstrate clearly the air forces.

Several auxiliary methods have been tried for erecting a sand pile. Frames could not be used, as they would require a small loading pressure upon wings, and furthermore they could not clear the obstructions at joining points or conform to wings of different chord lengths. Frames of a width equal to the wing chord and with a plan construction coinciding with the linear shape of the sand hill and with a capacity corresponding to the lateral distribution of the sand would have to be constructed specially for each wing shape. Neither can they be used for wings of varying chord length, as they are difficult to manipulate and require considerable time for making the test.

The most adequate test method proved to be a subdivision of the wing span into areas subject to equal loads. This test method has the practical advantage in that the same measuring weights are always applied and that buckets having the same standard capacity could be used. This area distribution is indicated by partitions erected upon the surface in such a way as not to strengthen the wing structure (fig. 35).

The corresponding areas to the right and to the left on the upper and lower wings are given the same consecutive number, and when the test is made they are called off by the test assistant. In apportioning the different loads on the wing tips of the upper and lower wings and on the unequally shaped portions a different size and omission of areas is required in the proper rotation. The wing loading is done under the directions and supervision of a testing assistant, who is seated in a position which enables him to observe the entire procedure. The sand is placed simultaneously into the areas of the same number, thus maintaining an equal load distribution. The distribution of the sand in the direction of the wing chord is done with rakes in the hands of especially trained assistants.

During the war it was customary to use a complete airplane for wing tests. This method was advantageous in that the important fuselage joints and the wings were tested at the same time, and in this way accidents could more readily be avoided. Furthermore, the fundamental mistakes in construction could be accounted for more easily in the breaking of both wings simultaneously than in the breaking of one. The test on both sides is, of course, more expensive than the one-sided test; so if a considerable saving in cost is necessary, the testing of one side is to be employed (see fig. 35). The structure in this case consists of heavy structural steel, with attachments and joints for the wings similar to those on the fuselage of an airplane. The construction of these attachments and joints, however, is always a special technical task and frequently is possible only with new designs which are not as yet in use on an airplane. The additional cost, however, does not equal that of the two-sided test. The one-sided method does not, of course, test the fuselage structure, but this can be done with a testing machine for that purpose. With due consideration for the preceding statements, the one-sided test has its advantages, in that the discovered failure of defects can be remedied in the other wing, thereby preventing a similar failure.

In cases A and D the conditions representing the air forces can be harmonized without special difficulty.

The wing chord in case A is in a horizontal position, while in case D it is inclined 1 : 4.

The wing test of the Fok E V ($G=610$ kg.; $G_F=73$ kg.) for case A is shown in Figure 36. With a load of 190 per cent of the required fivefold load, that is to say, with 9½ times the sand load (about 5,050 kg.), a failure occurred in the right wing at a distance of 1.85 m. from the center of the fuselage and also in the left wing at a distance of 1.15 m. from the same point.

For cases B and C, in which the air forces are equal but opposite to each other, a reproduction of the forces is difficult. For case B the representation of the air forces, acting upon the leading edge of the wing from above, is neglected. The sand is placed exceedingly far back on the wing, so that the resultant of the air forces is correct. If the ribs can be regarded as sufficiently rigid, the supporting surfaces of the wing (but not the ribs) receive a loading which produces the correct result. The air forces acting in the opposite direction are not reproduced, and as a result the ribs are overloaded at the trailing edge. In consequence of this wrong method of testing, the trailing end of the rib is made stronger than necessary for the air forces experienced during a flight. The great strength in the trailing edge of the wings is, however, advantageous for taking up the high tension in the wing coverings.

In case C the sand can not be used on the wing, as the air forces act parallel to the wing chord. A reproduction of the load in this case is accomplished in the use of a wood truss projecting approximately at right angles to the wing chord, from which sand boxes are suspended. The lever of this truss is to be made of such length that in the testing of biplanes having truss wiring the moments and frontal force can be reproduced as nearly as possible in accordance

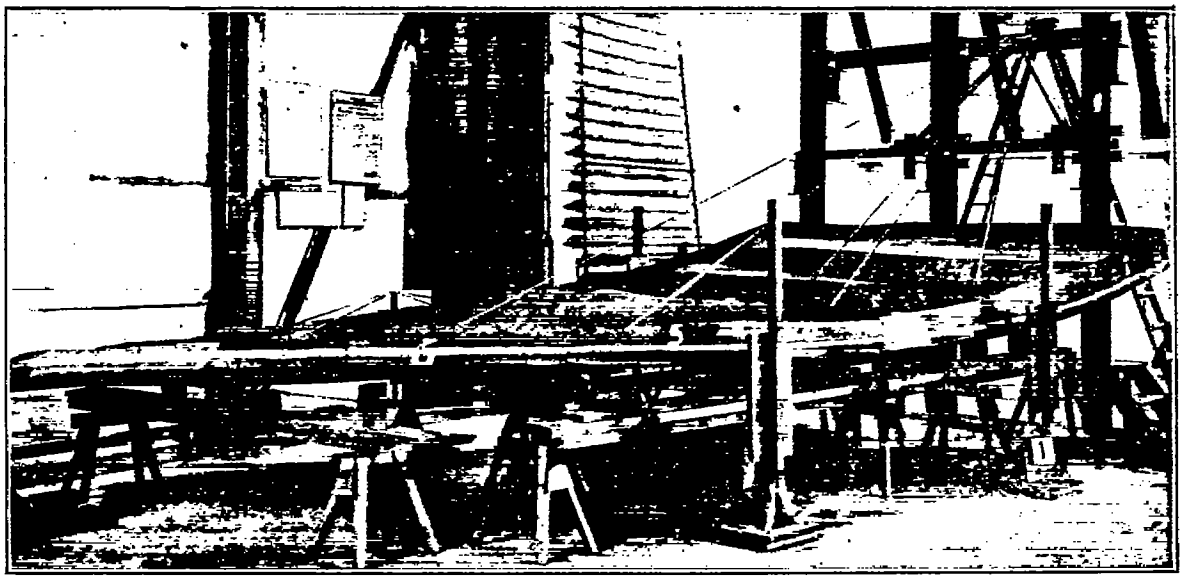

Fig. 35.—Structure for wing tests.

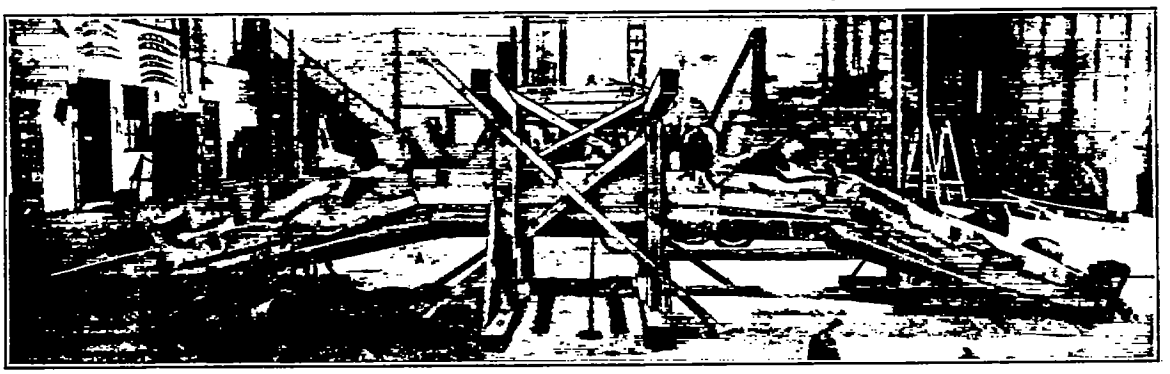

Fig. 36.—Wing test for Fok E V. Load case A.

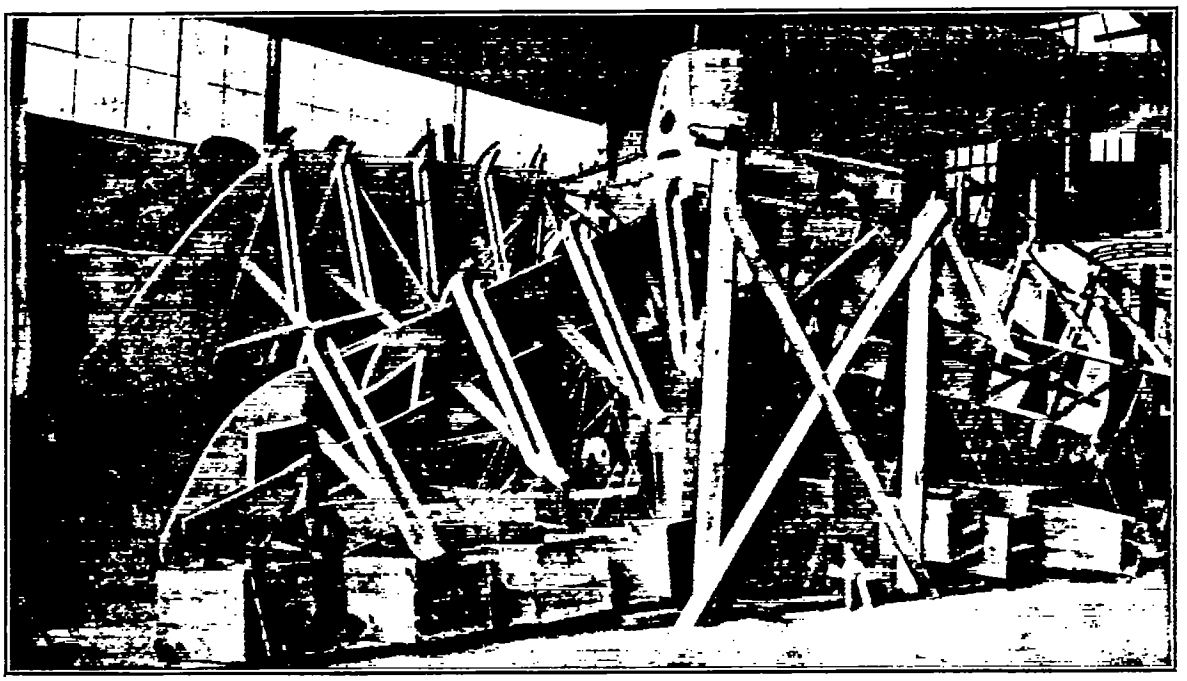

Fig. 37.—Wing test for Alb. D Va. Load case C.

with the requirements. The exact reproduction of the front force can, preferably, be omitted. The wing test on the Alb D Va, case C, ($G=935$ kg.; G_r, including the filled radiator in the wing, weighing 145 kg.), is shown in Figure 37. With a load 2.32 times the required load and with a frontal force of 1,830 kg. and an average value of 2,400 kg./m., for the turning moment, a failure occurred in which the upper wing was torn apart at the center, while in the lower wing warping resulted throughout.

The exact knowledge of the wing deflections in loading is of special importance and should be compiled. The DVL employed, in the beginning, the method of noting the deflections on plates arranged at the side of the wing and the photographing of a white line painted on the edge of the wing, indicating deflections under the different loadings (see fig. 35). This method had the disadvantage in that the important deflections of the spars were insufficiently indicated. The Flz, therefore, used tubes containing wooden measuring rods connected in sufficient numbers to the spars and joints. In this way the deflections were measured. A number of successful readings (figs. 38 to 41) were obtained by this method. Unfortunately, these results are useful only to show elasticity and torsion of the wings, and are not to be used in checking strength calculations.

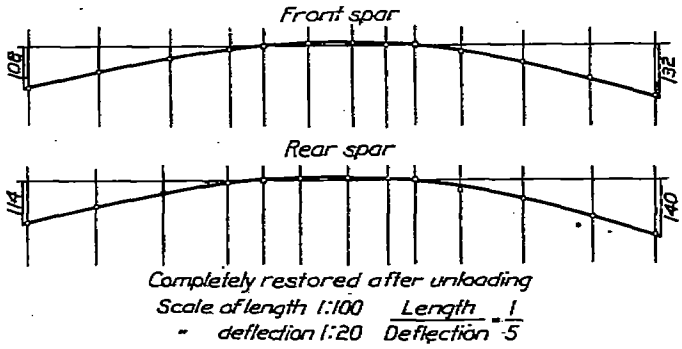

FIG. 38.—Deflection of spars of Fok E V for case A with load 5 times the required load.

A deflection of the wings, though unimportant in consideration of strength, can be fatal to the aerodynamical qualities. The BLV of 1918 required, therefore, that in the case of monoplanes and biplanes without external trussing or with trussing in one vertical plane only, the warping between the spars, measured at the wing tips, should not be more than 5° as in case A, or 10° as in case C. In the Fok E V (fig. 36) test for case A, the deflections occurred as shown in Figure 38, resulting from the application of the required 5-fold load, which is equal to a sand load of about 2,600 kg. The difference in the deflections of the wing spars as measured at the wing tips averaged 8 mm. with a spar length of 420 mm.; this would cause a chord inclination of about 1°, which would be permissible for case A.

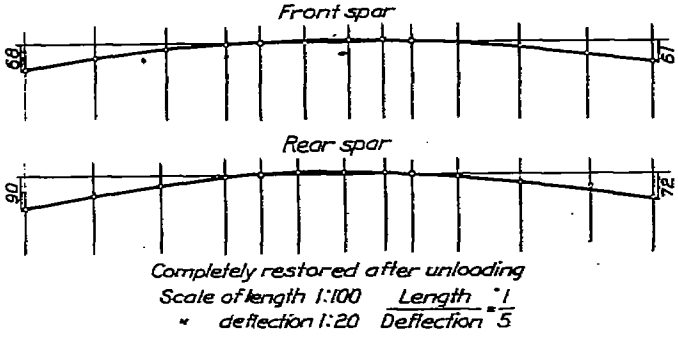

FIG. 39.—Deflection of spars of Fok E V for case B with load 3.5 times the required load.

Figure 39 shows the deflections for the same Fok E V test for case B, with the required 3.5-fold load, which equals a sand load of about 1,800 kg. The deflections of the spar increased, averaging 16 mm., while the inclination of the chord was about 2°. In case C the difference in spar deflection was not measured, but it can be assumed that the chord inclination remained within the permissible limits, as the wings did not break until 116 per cent of the required 2.5-fold load had been reached.

An example of deflections in the biplane Han Cl V ($G=1{,}050$ kg.; G_r, including the filled gravity fuel tank $=135$ kg.) is given in figure 40 with a load three times that of the required load, case D, and in Figure 41 with 3.5 times the required load, case B. In both cases considerable elongation was observed in the lift wires. The spars were located 550 mm. apart. The warping of the spars in case B amounted to 0.667° in the upper and to about 4.5° in the lower wing.

The disagreement between results obtained by calculation and those obtained through tests on the finished product has not as yet been accounted for. A method that will correct this difficulty must be produced in future work.

As a matter of economy, it is imperative that extensive strength tests be discontinued and that every effort be made to develop improved methods of analysis. Furthermore, wherever possible, the same wing shall be used for all load cases. In resorting to this measure every precaution must be taken to prevent a complete breaking of the wings. This may be accomplished by placing blocks under the wing spars in such a way as to prevent excessive deflection or warping, which might result in serious damage. The more efficiently a device of this sort is erected and operated during the test, the more easily the slightest indication of a break can be detected. By exercising care in use of this method, all load cases can be tested with one pair of wings, and rarely will another wing have to be sacrificed. There is an objection, however, to use of the same wing in that the results for the final strength test will not be correct on account of the wing having been subjected to so many different loads. But, on the other hand, if a wing still retains its resisting qualities after these loadings, it is an indication that the wing is certainly not too weak.

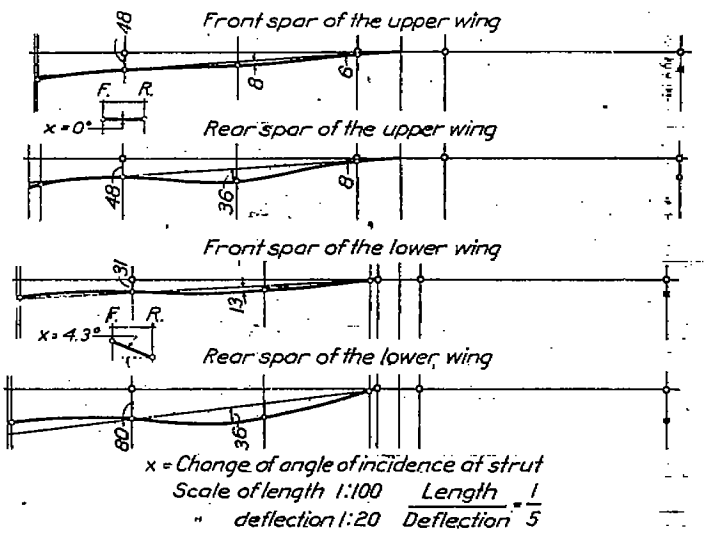

FIG. 40.—Deflection of spars of Han C1 V for case D with load 3 times the required load.

The strength test on the complete wing does not indicate with sufficient accuracy the strength of the individual parts. Ribs, spars, fittings, and joints each require a special investigation, which can be conducted either on machines or on special devices. The importance of a test on the rib is especially recognized. The best method is probably that of placing the loads simultaneously upon several ribs, connected together and braced against lateral movements as accomplished in the complete wing. If a test is made on a single rib, special attention must be paid to lateral bracing. The loading must be done carefully and in accordance with aerodynamic principles (see figs. 15 and 31). Frequently this necessitates the use of a system of levers so designed and assembled that the total load is subdivided and distributed in a manner similar to that experienced in actual flight. The rib test is also of special importance, as designs made from strength calculations have been found too weak for use.

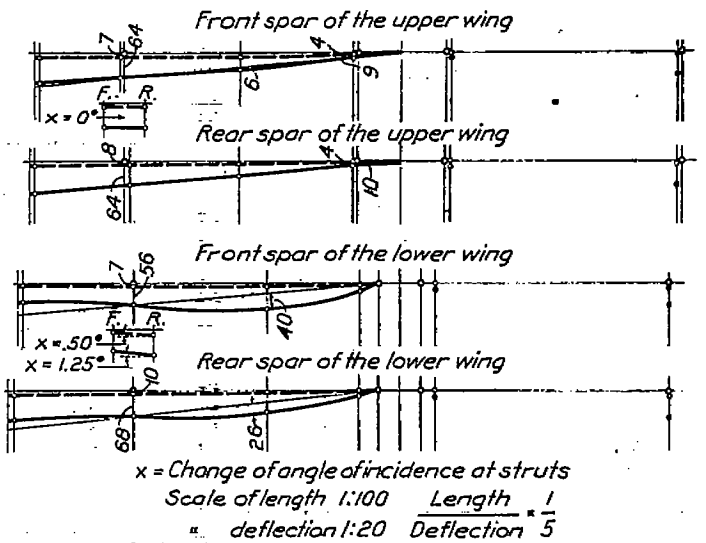

FIG. 41.—Deflection of spars of Han C1 V for case B with load 3.5 times the required load.

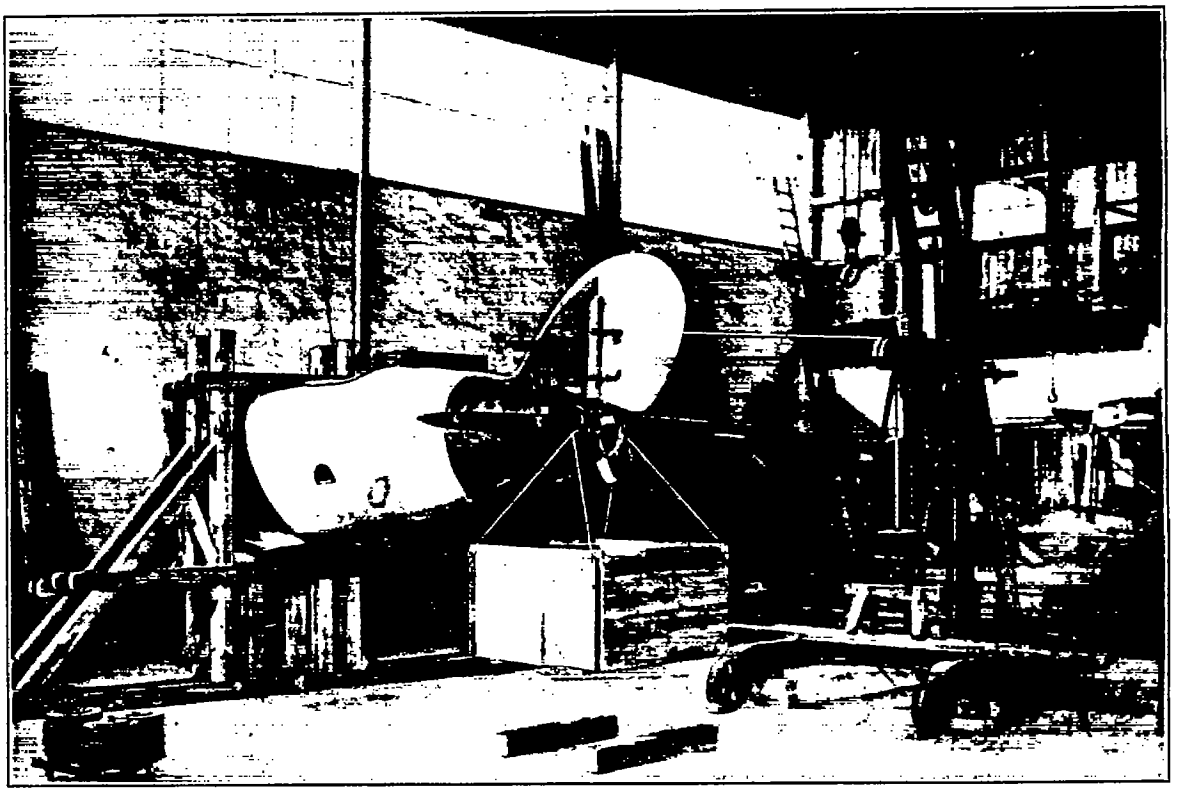

Fig. 42.—Fuselage test for Ru D I.

(b) EMPENNAGE AND CONTROLS.

The strength test of the empennage does not involve special difficulties. The elevators are usually tested to withstand pressure from above. Associated with this test is that for the control mechanism. The latter test requires special attention, since flexibility and friction must be determined at the same time. With an equal load applied to the elevator and the control mechanism simultaneously, the difference in the forces gives the friction. The flexibility of the control mechanism is measured by the deflection of the elevator with the stick held rigidly. The tests on the empennage and the control mechanism have led to the correction of many faults. Tests of the control mechaniam while in use are not considered necessary, since an ample factor of safety is assured by the use of large pulleys and specially constructed cables with hemp or paper cores.

(c) THE FUSELAGE.

In the early summer of 1914 the DVL, for the benefit of the Aviation Corps, made comparative tests on fuselages, using the strut and wire type made by the LVG (Luftverkehrsgesellschaft) and the monocoque type made by the Albatros Co.

In the fuselage tests conducted by the Flz the upper portion of the fuselage near the wing and the lower portion near the landing gear were attached to a rigid support, and both fin and tail plane were fully loaded. The attachments unfortunately often caused difficulties which frequently resulted in breaks. These tests revealed that the cockpits and connecting parts were of ample strength, though this could not be verified by calculation.

In Figure 42 the fuselage test of the Ru DI (G = 765 kg.) is shown. A simultaneous loading of the elevator and rudder is employed, a vertical force of about 345 kg. being applied at the hinge of the elevator and a horizontal force of about 140 kg. at a distance of 49 cm. above the elevator hinge. When a load equal to 176 per cent of the required load had been reached, the fin separated from the fuselage

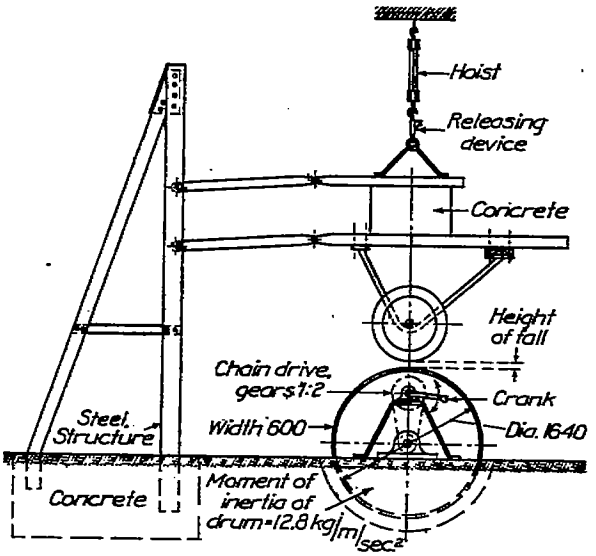

FIG. 43.—Device for impact testing of tires.

(d) THE LANDING GEAR.

The testing of the landing gear was done with a device which imitated the forces experienced in landing (fig. 43). A box containing concrete and metal equal to the total weight of the airplane, excepting the landing gear, was placed on a steel frame. This frame was provided on its underside with means for attaching the landing gear, and was hinged to a rigid vertical framework, thereby permitting it to be raised, by the aid of a block and tackle, to the desired height. It was held in this position and released at the proper time by a suitable device (see Sec. III *a*). Two drums, carefully journaled, each with a moment of inertia equal to 12.8 kg./m./sec.² were put in motion until a circumferential speed of about 30 km./h. was reached. At this point the weight was released and the wheels of the landing gear, falling upon the drums, were suddenly turned, bringing the tires and springs into the required action.

It has been shown in nearly every test that the drums came to rest in about two or three seconds. It is evident from this that an average horizontal force of 60 kg. was acting on the circumference of the wheels. Since the first impact with the drum is the most violent and since the landing gear bounces during the test, a multiple of this value must be taken into

consideration when the test is started, and it must be assumed that the magnitude of the force C (see fig. 33) is actually reached.

Toward the end of the war, this landing-gear impact device often gave good service in testing tires of substitute materials, the use of which had become necessary.

The convex rim of the drum does not, however, represent the surface of the ground correctly, and as a result the landing-gear wheels are subjected to stresses which differ somewhat from the actual. If another device of this sort is constructed, the drums should be raised, so that the wheels of the landing gear can strike the inner circumference of the drum rim.

The springs of the landing gear must be tested separately on a machine for determining their effect on the tires, axle, struts, and wires.

VII. CONCLUSIONS.

In the preceding chapters an account is given of the origin of the views and fundamental principles underlying the construction of German airplanes. The rapid rise of the airplane industry left many unfinished steps which will be completed later.

The German Government no longer buys or uses airplanes, but restricts its participation to the supervision of air traffic and the licensing of airplanes and crews. In the creation of new methods and standards for strength, capacity, and quality, full freedom, which would serve as an impetus, is not given to governmental institutions. This need not, however, give cause for alarm, since the high technical efficiency of airplane factories and the precautionary measures of insurance companies will practically assure the qualifications of airplanes and crews for service in commercial traffic.

Seagoing vessels have for many decades been inspected under the supervision of technical organizations, both during construction and regularly before sailing; and if requirements in every particular are met, certificates are issued. Insurance companies issue insurance only to vessels having this certification. All the indications are that similar precautions will be taken as regards airplanes, with due consideration for their peculiarly complex requirements. The DVL is compiling very excellent data, from the testing of German commercial airplanes, which they intend to publish at an opportune time in convenient handbooks.

VIII. APPENDIX.

1. THE CONVERSION FORMULAS OF ALBERT BETZ.

Extract from:

A. Betz, Influence of the span and the specific surface load on air forces of supporting surfaces. T.B. 1., page 98.

A. Betz, Calculation of the air forces acting on the cell of a biplane from the corresponding values of monoplane supporting surfaces. T.B. 1., page 103.

SYMBOLS.

α = angle of attack (measured in radians).

$\epsilon = \frac{c_w}{c_a}$ tangent of gliding angle.

A = Lift (kg.).

F = Wing area (m.^{2}).

b = Span (m.).

t = Wing chord (m.).

f = Camber (m.).

h = Gap (m.).

y = Stagger (m.).

β = Angle of stagger.

The data can be seen from figure 44. With the stagger as shown in figure 44, the angle of stagger is to be taken as positive for the upper wing and negative for the lower wing. With an opposite stagger this is reversed.

2. CLASSIFICATION OF MILITARY AIRPLANES.

TABLE II.

Class of airplane.	Power of engine (rot=rotary; st=fixed).	Weight, in round numbers.	Number of airplanes.	Useful load.												Use till end of war.
				Occupants.		Arms and ammunition.		Bombs.		Wireless and photographic apparatus.		Fuel and oil.		Remaining.	Total.	
												Possibility of.	Figured weight.			
	HP.	Kg.		Number.	Kg.	Type.	Kg.	Type.	Kg.	Type.	Kg.	H.	Kg.	Kg.	Kg.	
A	100 st	1,100	1	2	180	None		None		None		4	145	40	365	Formerly observation planes; later out of service.
B	100/120 st	1,100	2	2	180	do		do		do		4	145	40	365	Formerly observation plane; later equipped with dual steering mechanism and employed in training schools.
C	150/160 st 200/220 st 200 st	1,350 1,500 1,700	2	2	180	1 fixed machine gun; 1 movable, with ammunition.	100	Formerly provision for 50 kg.		Wireless and photographic apparatus	20	4½ 3¾ 3¾	172 196 240	40 40 40	492 516 580	For training. Short-range observation plane. Long-range observation plane.
C1	160/180 st	1,150	2	2	165	do	61.5	None		Wireless	21	3	100.5	3	360	Protection airplane at the front.
D	100/120 st 100 rot 160 st 180 st	740 620 900 840	2	1	100 100 80 100 80	1 fixed machine gun, with ammunition. 2 fixed machine guns, with ammunition.	50 70 47.6 70 47.6	do		None		2 1½ 1½ 2 1½	70 63 51 65 43.8	 16.4 9.1	220 233 195 235 180	Training airplane at home. Out of service. Pursuit airplane at the front.
Dr	110 rot	580	3	1	80		47.6					1½	41	11.4	180	
E	80/120 rot 160 rot	580 600	1	1	90	1 fixed machine gun, with ammunition. 2 fixed machine guns, with ammunition.	50 70	None		None		2 1½	70 63		210 223	Formerly pursuit airplane; later out of service. Only used in one type at the front.
G	2 x 150 st 2 x 220 st 2 x 260 st	2,900 3,250 3,600	2	2 3	180 270 245	2 movable guns, with ammunition 4 movable guns, with ammunition	100 130	Different arrangements.	200 300	do Wireless outfit	 26.5	4 3¾ 3½	435 440 508	 26.5	935 1,010 1,235	Those left are used for training at home. Bombing.
J	200 st	1,900	2	2	165	2 movable guns, with ammunition	76.5	None		Wireless and photographic apparatus	21	3	135	12.5	410	Infantry airplane.
N	260 st	2,100	2 or 3	2	170	1 movable gun, with ammunition	35	Different arrangements.	500	None		4	290	5	1,000	Under construction, night bomber.

CONVERSION OF THE FORCES WITH WINGS OF DIFFERENT SPAN.

The subscripts 1 and 2 relate to the wings of different span under consideration:

$$\alpha_2 = \alpha_1 + \psi$$
$$c_{a2} = c_{a1} = c_a$$

(The lifting values of the finite supporting surfaces are nearly equal to the lifting value of the infinitely wide supporting surface, hence also equal to each other.)

$$c_{w2} = c_{w1} + c_a\psi$$
$$\epsilon_2 = \epsilon_1 + \psi$$

wherein

$$\psi = \frac{1}{\pi} c \left(\frac{F_2}{b^2_2} - \frac{F_1}{b^2_1} \right)$$

CONVERSION OF AIR FORCES OF MONOPLANE WINGS TO THOSE OF BIPLANES.

The subscripts o and u relate, respectively, to upper and lower wings.

First the following ratios (always taken as positive) must be computed:

$$\lambda_1 = \frac{b_o + b_u}{2h} \quad \lambda_2 = \frac{b_o - b_u}{2h}$$

Afterwards for each of these quantities the corresponding values r_1, m_1, n_1, $h\frac{\delta n_1}{\delta y}$ and r_2, m_2, n_2, $h\frac{\delta n_2}{\delta y}$ are calculated from the equations:

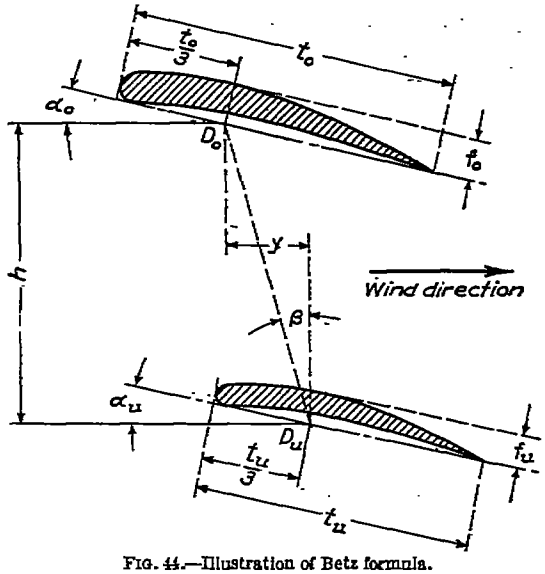

FIG. 44.—Illustration of Betz formula.

$$r = \sqrt{1 + (\lambda \cos \beta)^2}$$
$$m = [r - 1] \cos \beta$$
$$n = [r - 1] \sin \beta - 1n \left[\frac{r + \sin \beta}{1 + \sin \beta} \right]$$
$$h\frac{\delta n}{\delta y} = \left\{ r - \frac{\sin \beta}{1 + \sin \beta} - \frac{1}{r + \sin \beta} + \frac{\lambda^2 \sin \beta}{r + \sin \beta} \left[\frac{\cos^2 \beta}{r} - \sin \beta \right] \right\} \cos^2 \beta$$

In condensed form:

$$\theta_o = \frac{A_o}{4\pi q\, b_o\, b_u} \theta_u = \frac{A_u}{4\pi q\, b_o\, b_u}$$

TABLE I.—*Tabulation for changing from monoplane to biplane.*

	Upper wings.		Lower wings.	
	Monoplane.	Biplane.	Monoplane.	Biplane.
Angle of attack (expressed in absolute units)	α_o	$\alpha_o + \alpha'_u$	α_u	$\alpha_u + \alpha'_u$
	$\alpha'_o = \theta_u(n_1 - n_2)$		$\alpha'_u = \theta_o(n_1 - n_2)$	
Wing chord	t_o	$t_o + t'_o$	t_u	$t_u + t'_u$
	$t'_o = -t_o\ \delta_u(m_1 - m_2)$		$t'_u = t_u \theta_o(m_1 - m_2)$	
Camber	f_o	$f_o + f'_o$	f_u	$f_u + f'_u$
	$f'_o = \frac{t_o^2}{8h} \theta_u \left[h\frac{\delta n_1}{\delta y} - h\frac{\delta n_2}{\delta y} \right]$		$f'_u = \frac{t_u^2}{8h} \theta_o \left[h\frac{\delta n_1}{\delta y} - h\frac{\delta n_2}{\delta y} \right]$	
Lift	A_o	$A_o + A'_o$	A_u	$A_u + A'_u$
	$A'_o = A_o \theta_u(m_1 - m_2)$		$A'_u = -A_u \theta_o(m_1 - m_2)$	
Tangent of gliding angle	ϵ_o	$\epsilon_o + \epsilon'_o$	ϵ_u	$\epsilon_u + \epsilon'_u$
	$\epsilon'_o = \theta_u(n_1 - n_2)$		$\epsilon'_u = \theta_o(n_1 - n_2)$	

3. EXPLANATION OF CALCULATIONS FOR WING SPARS.

(1) Calculation of a beam under axial and transverse loads, supported at two points and subjected to a moment at the fixed ends (acc. to Müller-Breslau statics of structures, Vol. II, sec. 2, p. 286, a. f. and acc. to H. Reissner and E. Schwerin: The Strength Calculation of Airplane Spars, Annual Report of the WGL, Vol. IV, 1916, p. 10.)

In Figure 45 the following dimensions, angles, forces, and moments are given:

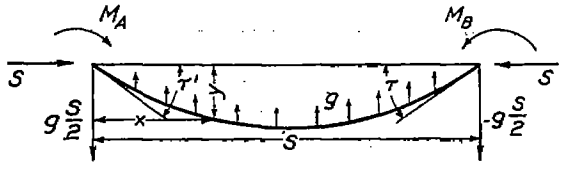

FIG. 45.—Diagram for spar calculation.

s = cm. The length of a spar.

$\left.\begin{array}{l} x = \text{cm.} \\ y = \text{cm.} \end{array}\right\}$ Coordinates of a point.

S = kg. Longitudinal load.

g = kg./cm. Transverse load, uniformly distributed. Axial.

$\left.\begin{array}{l} M_A \\ M_B \end{array}\right\}$ = kg./cm. Moments about fixed points.

τ, τ^1 = Inclinations of tangents at supporting points.

Also:

E = kg./cm.^{2} Modulus of elasticity of the building material.

I = cm.^{4} Moment of surface inertia of a spar.

The moment acting on the point x, y is given by the ratios of equilibrium

(1) $$M = M_A + \frac{x}{s}(M_B - M_A) - \frac{gx}{2}(s-x) + S\,y$$

and by the differential equation of the elastic curve

(2) $$M = -E\,I\,\frac{d^2y}{dx^2}$$

After introducing the length $k = \sqrt{\frac{EI}{S}}$, and the angle $\alpha = \frac{s}{k}$ and after integration of the combined ratios and the introduction of the limits for $y = o, x = o$, on one hand, and $y = o, x = s$, on the other hand, the following ratio is obtained:

(3) $$y = \frac{1}{S}\left[(M_A - gk^2)\left(\cos\frac{x}{k} - \sin\frac{x}{k}\cot\alpha\right) + (M_B - gk^2)\frac{\sin\frac{x}{k}}{\sin\alpha} + gk^2 - M_A - \frac{x}{s}(M_B - M_A) + \frac{gx}{2}(s-x)\right]$$

(4) $$M = (M_A - gk^2)\left[\cos\frac{x}{k} - \sin\frac{x}{k}\cot\alpha\right] + (M_B - gk^2)\frac{\sin\frac{x}{k}}{\sin\alpha} + gk^2$$

The differential quotients $\frac{dx}{dy}$ and $-\frac{dx}{dy}$ on the points $x = o$ and $x = s$ give the inclination of the tangent on the supports.

$$\tau = M_A\,\psi'' + M_B\,\psi' - g\,s^2\,\psi'''$$
$$\tau' = M_A\,\psi' + M_B\,\psi'' - gs\,\psi'''$$

The following condensed forms are used:

$$\psi' = \frac{v'}{Ss} \qquad v' = \left(1 - \frac{\alpha}{\tan\alpha}\right.$$

$$\psi'' = \frac{v''}{Ss} \qquad v'' = \left(\frac{\alpha}{\sin\alpha} - 1\right)$$

$$\psi''' = \frac{v'''}{Ss} \qquad v''' = \left(\frac{\tan\frac{\alpha}{2}}{\alpha} - \frac{1}{2}\right)$$

Report No. 143.

ERRATA SHEET.

Page 308—line 9, insert "Axial" after "longitudinal load,"
line 11, omit "Axial."
lines 18 and 24, "ratio" should be "relation."
line 8 from bottom, "$\frac{dx}{dy}$ and $-\frac{dx}{dy}$" should be "$\frac{dy}{dx}$ and $-\frac{dy}{dx}$"
line 5 from bottom, "gs" should be "gs^2".
line 3 from bottom, closing half of parenthesis should be inserted at end.

Page 309—line 3, "cot α" should be "$-\cot \alpha$".
lines 5 and 6, "$-gk^2$" should be "$+gk^2$".
line 27, "only a generalized Clapeyron" should be "only one generalized Clapeyron."

Page 313, Table "G," "$-gk^2$" should be "$+gk^2$" throughout table.

69984—23

The values v', v'', and v''' are functions of the angle α, and are plotted in Figures 49 to 51. It is seen that all three values become infinite with $\alpha = 180°$. When—

$$\tan \frac{x}{k} = \frac{(M_B - gk^2)}{(M_A - gk^2) \sin \alpha} \cot \alpha, \tag{5}$$

equation 4 reaches a maximum or minimum

$$M_c = \frac{M_A}{\cos \frac{x}{k}} - gk^2 \left(1 - \frac{1}{\cos \frac{x}{k}}\right) \tag{6}$$

$$= \frac{M_B}{\cos \left(\frac{s-x}{k}\right)} - gk^2 \left(1 - \frac{1}{\cos \left(\frac{s-x}{k}\right)}\right)$$

Equation 6 can be used only when a value is obtained from 5 which is between $x = o$ and $x = s$. Otherwise M_c is equal to the larger value of M_A and M_B, with which it must be compared in the use of equation 6.

In Figure 46 a continuous girder is shown, to which the conclusions explained heretofore can be applied for every portion. By the introduction of the condition:

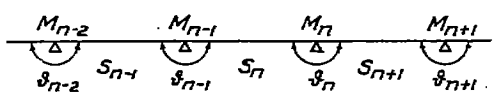

FIG. 46.—Diagram for spar calculation.

(7) $\Delta\vartheta = \tau + \tau'$

the generalized Clapeyron equation for determining the moments about a fixed point is obtained:

(8) $M_{n-1}\,\psi''_n + M_n\,(\psi'_n + \psi'_{n+1}) + M_{n+1}\,\psi''_{n+1} = \Delta\vartheta_n + g_n s^2_n\,\psi'''_n + g_{n+1}\,s^2_{n+1}\,\psi'''_{n+1}$

In a beam with r supports, there are $r-1$ bays.

For every two bays a generalized Clapeyron equation can be written; therefore as a total of $r-2$ equations.

On account of the structural requirements (e. g., hinged ends), the initial and final moments are defined so that $r-2$ moments must be computed. This is possible, since there is the same number of Clapeyron rules and since the values $\Delta\vartheta$ can be obtained from the following consideration. Figure 47 shows the deflection of the points of support. Since the angles are small, the following geometrical equation applies:

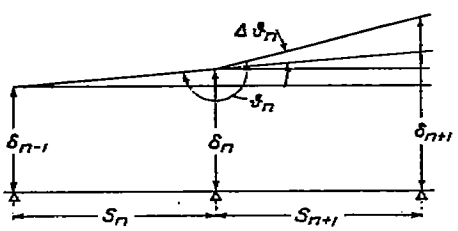

FIG. 47.—Diagram for span calculation.

(9) $$\Delta\vartheta_n = \frac{\delta_{n+1} - \delta_n}{s_{n+1}} - \frac{\delta_n - \delta_{n-1}}{s_n}$$

With a wing spar having three supports, only a generalized Clapeyron equation exists. M_{n-1} is usually zero, being flexibly attached. M_{n+1} is often determined from the overhang.

$$M_n = \frac{\Delta\vartheta_n + g_n\,s^2_n\,\psi'''_n + g_{n+1}\,s^2_{n+1}\,\psi'''_{n+1} - M_{n+1}\,\psi''_{n+1}}{(\psi'_n + \psi'_{n+1})} \tag{10}$$

(2) General investigation of the determinant of the denominator with wing spar supported at three points (according to the standards of the Flugzeugmeisterei):

The calculation of the spars may be done with a load factor, p. It then remains to find the value of the determinant of the denominator corresponding to the value q.

$$\psi'_p = \frac{1}{S_p s}\,v'_p \qquad \psi'_q = \frac{1}{S_q s}\,v'_q$$

$$\frac{S_p}{S_q} = \frac{p}{q} \qquad \psi'_q = \frac{1}{\frac{q}{p} S_p s}\,v'_q$$

$$\alpha_q = \alpha_p\,\frac{k_p}{k_q} = \alpha_p \sqrt{\frac{q}{p}}$$

It follows that with an increasing load factor, the longitudinal loads increase in the ratio $\frac{q}{p}$ and the angles α in the ratio $\sqrt{\frac{q}{p}}$. The values v'_q must be recalculated for the increased values of α.

The determinant of the determinator, $(\psi'_n+\psi'_{n+1})=0$, can be converted to the equation:

$$\frac{1-\alpha_n \cot \alpha_n}{C}=\lambda\alpha_n \cot (\lambda\alpha_n)-1$$

in which

$$C=\frac{S_n}{S_{n+1}}\frac{s_n}{s_{n+1}}$$

$$\lambda=\frac{s_n}{s_{n+1}}\sqrt{\frac{S_n}{S_{n+1}}\frac{s_{n+1}}{s_n}}$$

For general values of C and λ, dependent on α, a value of α can be found for which the determinant of the determinator becomes zero.

(3) Example: Upper spar of a biplane with two bays, the inner end being hinged and the outer end overhung (the results are taken from normal calculation given out as standard by the Flz to airplane companies). (See fig. 48.)

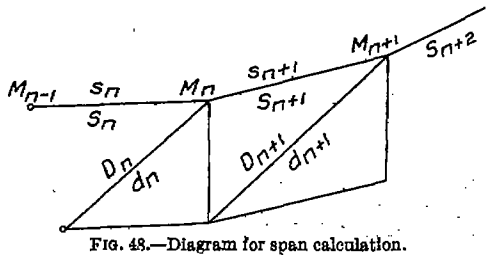

FIG. 48.—Diagram for span calculation.

(A) STRUCTURAL DATA.

(a) Spars: Material, pine; $E=110{,}000$ kg./cm.²; lengths, $s_n=200$ cm., $s_{n+1}=260$ cm., $s_{n+2}=140$ cm.

	Supporting points.	Bays.
Sections (cm.²)	21	12
Momenis of inertia (cm.⁴)	111	77
Moments of resistance (cm.³)	28	19

(b) Diagonal stays: Material, steel cable; $E=1{,}290{,}000$ kg./cm.²; lengths, $d_n=243$ cm., $d_{n+1}=320$ cm.; sections, $Fd_n=0.1$ cm.², $Fd_{n+1}=0.07$ cm.²

(c) Gap, $h=187$ cm.; chord, $t=180$ cm.

(B) LOADING (4.5 TIMES THE REQUIRED LOAD).

(a) Spars: Longitudinal loads, $S_n=-1{,}080$ kg., $S_{n+1}=-792$ kg., $S_{n+2}=0$ kg.; lateral load, $g=g_n=g_{n+1}=g_{n+2}=1.405$ kg./cm.

Beginning at a distance from the tip of the wing equal to the chord, the lateral load g decreases to $g/2$ at the tip.

(b) Lift wires: Longitudinal loads, $D_n=+1{,}443$ kg., $D_{n+1}=+981$ kg.

(C) DETERMINATION OF $\Delta\vartheta_n$

$$\delta_{n+1}-\delta_n=\frac{D_{n+1}d^2_{n+1}}{E\,Fd_{n+1}h}=5.076 \text{ cm.}$$

$$\delta_n-\delta_{n-1}=\frac{D_n d^2_n}{E\,Fd_n h}=3.527 \text{ cm.}$$

$$\delta_{n-1}=0$$

$$\Delta\vartheta_n=\frac{\delta_{n+1}-\delta_n}{s_{n+1}}-\frac{\delta_n-\delta_{n-1}}{s_n}=\frac{5.076}{200}-\frac{3.527}{200}=0.00573.$$

(D) DETERMINATION OF THE VALUES v', v'', v''' AND ψ', ψ'', ψ'''.

	Bay s_n	Bay s_{n+1}
$k=\sqrt{\frac{EI}{S}}$ (cm.)	88.55	103.41
$\alpha=\frac{s}{k}$ (circular measure)	2.259	2.514
$v'=\left(1-\frac{\alpha}{\tan\alpha}\right)$	+2.356	+4.466
$v''=\left(\frac{\alpha}{\sin\alpha}-1\right)$	+1.924	+3.283
$v'''=\left(\frac{\tan\alpha/2}{\alpha}-\frac{1}{2}\right)$	+0.437	+0.726
$\psi'=\frac{v'}{Ss}\frac{10^{-5}}{\text{cm.kg.}}$	+1.322	+2.171
$\psi''=\frac{v''}{Ss}\frac{10^{-5}}{\text{cm.kg.}}$	+0.891	+1.595
$\psi'''=\frac{v'''}{Ss}\frac{10^{-5}}{\text{cm.kg.}}$	+0.2023	+0.3528

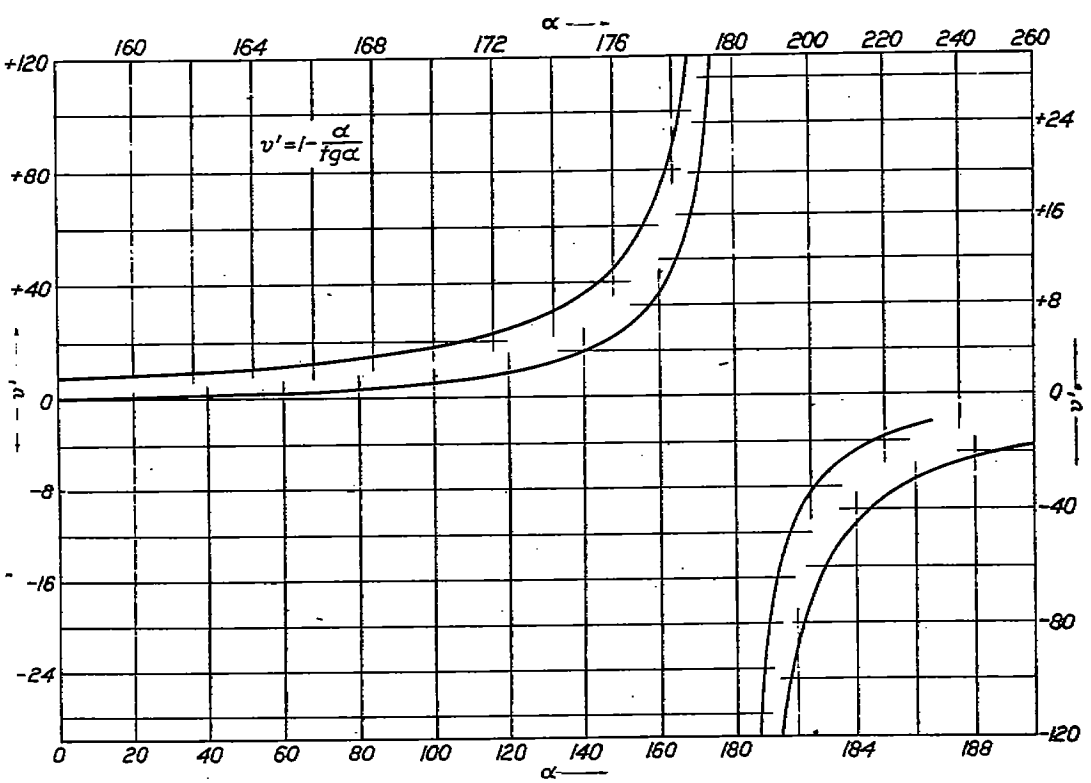

FIG. 49g—v' curve.

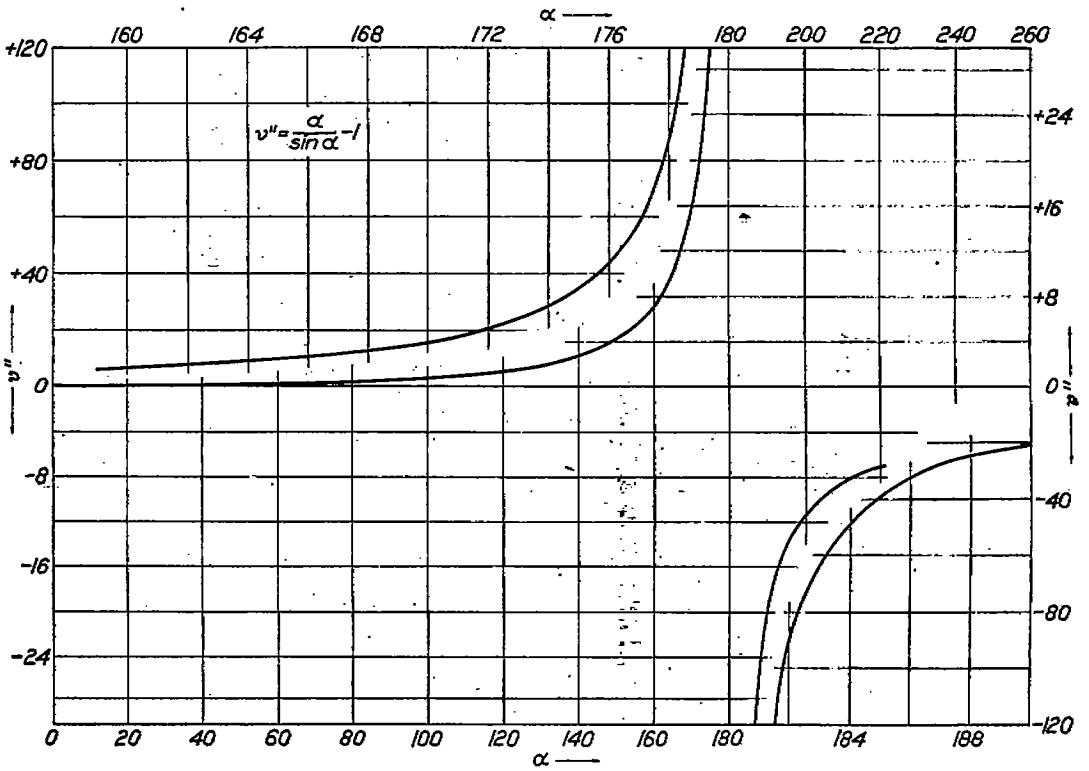

FIG. 50.—v'' curve.

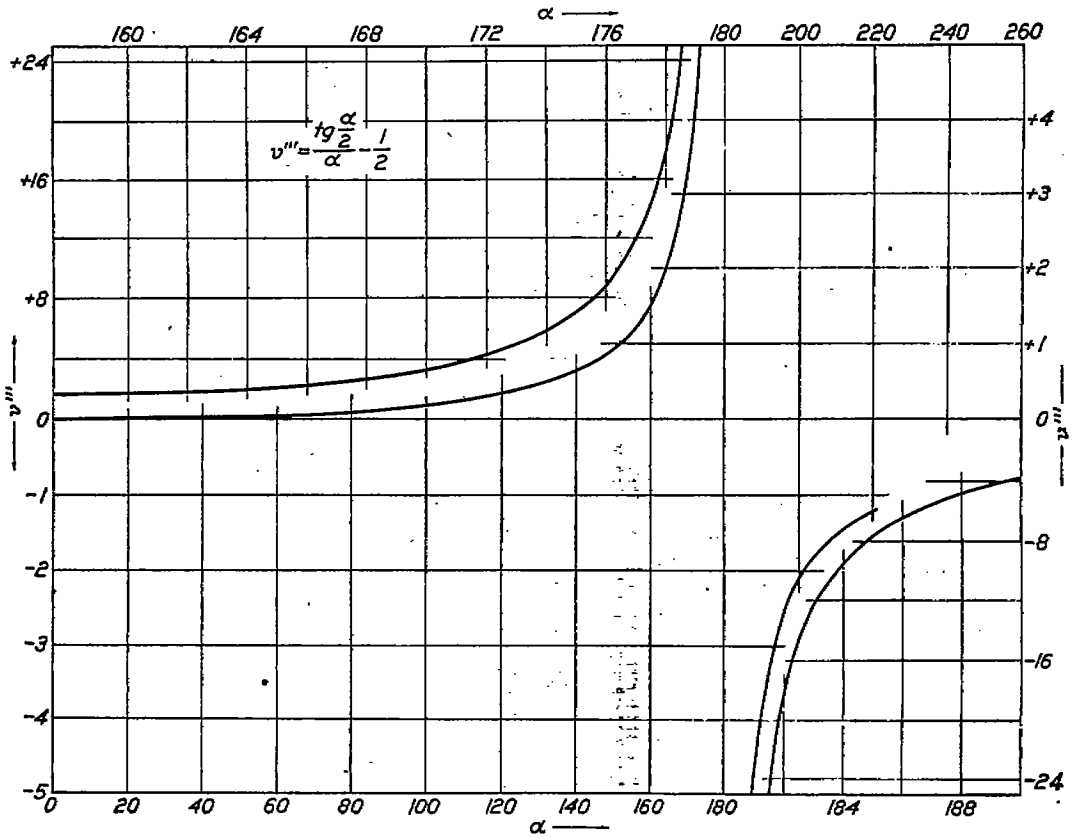

FIG. 51.—v''' curve.

(E) DETERMINATION OF M_{n-1} AND M_{n+1}.

Since the spar is flexibly supported, $M_{n-1}=0$, the moment of the fixed point on the overhanging end equals, for the assumed direction of the load,

$$M_{n+1}=\frac{g}{4}s^2_{n+2}\left(1+\frac{1}{3}\frac{s_{n+2}}{t}\right)=8{,}670 \text{ kg.cm.}$$

(F) DETERMINATION OF M_n.

$$M_n=\frac{\Delta\vartheta_n+g_n s^2_n \psi'''_n+g_{n+1}s^2_{n+1}\psi'''_{n+1}-M_{n+1}\psi''_{n+1}}{(\psi'_n+\psi'_{n+1})}$$

$$\begin{aligned}\Delta\vartheta_n &= +0.00573\\ g_n\, s_n^2\, \psi'''_n &= +0.11369\\ g_{n+1}\, s^2_{n+1}\, \psi'''_{n+1} &= +0.33508\\ M_{n-1}\, \psi''_n &= \pm 0.00000\\ M_{n+1}\, \psi''_{n+1} &= -0.13831\\ \hline \text{Numerator} &= +0.31619\end{aligned}$$

$$\begin{aligned}\psi'_n &= 1.322\times 10^{-5}\\ \psi'_{n+1} &= 2.171\times 10^{-5}\\ \hline \text{Denominator} &= 3.493\times 10^{-5}\end{aligned}$$

$$M_n=\frac{0.31619\times 10^5}{3.493}=9047 \text{ cm.kg.}$$

(G) MAXIMUM VALUE OF BAY MOMENT M_c.

	Bay s_n	Bay s_{n+1}
$\tan\frac{x}{k}=\frac{(M_B-gk^2)}{(M_A-gk^2)\sin\alpha}\cot\alpha$	+1.0534	+3.1896
x (cm.)	71.84	131.00
$M_c=\frac{M_A}{\cos\frac{x}{k}}-gk^2\left(1-\frac{1}{\cos\frac{x}{k}}\right)$ cm.kg.	−4983.	−4947.

(H) INVESTIGATION OF THE DETERMINANT OF THE DENOMINATOR.

$$D=(\psi'_n+\psi'_{n+1})$$

Load factors.	Bay s_n.		Bay s_{n+1}.		
	α_n	$\psi'_n 10^5$	α_{n+1}	$\psi'_{n+1}10^5$	$D\times 10^5$
2.25	1.597	+0.965	+1.778	+1.334	+2.299
4.5	2.26	+1.32	2.51	+2.16	+3.48
5.5	2.497	+1.637	2.774	+3.259	+4.896
6.5	2.716	+2.24	3.017	+8.413	+10.653
7.5	2.912	+3.84	3.240	−9.21	−5.37
7.75	2.966	+4.76	3.294	−5.84	−1.08
8.0	3.013	+6.30	3.346	−4.15	+2.15
9.0	3.196	−13.52	3.549	−1.75	−15.27
9.5	3.284	−4.83	3.647	−1.29	−6.12

See Figure 52.

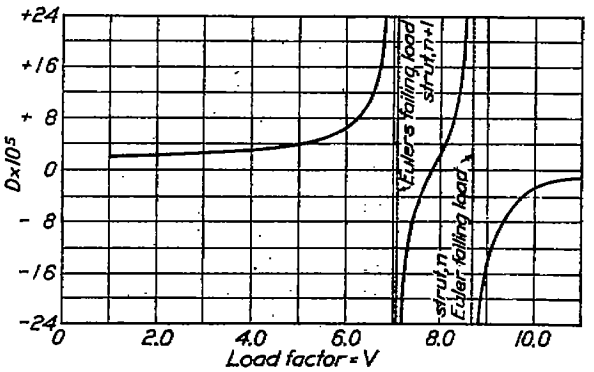

FIG. 52.—Curve showing determinant D of denominator in relation to load factor V.

4. LIST OF ABBREVIATIONS USED.

DVL = Deutsche Versuchsanstalt für Luftfahrt (Adlershof).
WGL = Wissenschaftliche Gesellschaft für Luftfahrt (Berlin).
Flz = (Königlich Preussische) Flugzeugmeisterei.
ZFM = Zeitschrift für Flugtechnik und Motorluftschiffahrt.
ZdVDI = Zeitschrift des Vereins Deutscher Ingenieure.
TB = Technische Berichte (der Flugzeugmeisterei).
BLV = Bau- und Liefervorschriften der Inspektion der Fliegertruppen.
AeVA = Aerodynamische Versuchsanstalt, Göttingen, formerly Modellversuchsanstalt für Aerodynamik.

5. BIBLIOGRAPHY.

No.	Author.	Title.	Place.
1	H. Reissner	Beanspruchung und Sicherheit von Flugzeugen.	Jahrbuch der WGL, 1913, p. 86.
2	H. Reissner u. F. Schwerin.	Die Festigkeitsrechnung der Flugzeugholme	Jahrbuch der WGL, Vol IV, 1916.
3	G. Eiffel	La résistance de l'air et l'aviation	Paris, 1910.
4	Advisory Committee for Aeronautics.	Technical report of the, 1911–12	London, 1912.
5	H. Heimann und G. Madelung.	Die Beanspruchung der Flügelrippen	TB I, p. 81.
6	A. Betz	Einfluss der Spannweite und Flächenbelastung auf die Luftkräfte an Tragflächen.	TB I, p. 98.
7	Do	Berechnung der Luftkräfte auf einer Doppeldeckerzelle aus den entsprechenden Werten für Eindeckertragflächen.	TB I, p. 103.
8	Leonard Bairstow	Applied Aerodynamics	London, 1920.
9	A. V. Parseval	Über Wirbelbildung an Tragflächen	Berichte und Abhandlungen der WGL, Heft 4, May, 1921.
10	B. Fuchs und L. Hopf	Die statische Stabilität des Doppeldeckers	TB II, p. 33.
11	Everling, Iklé und Sieber	Flossendruckmessungen	TB I, p. 302.
12	M. Munk	Messungen an Leitwerkmodellen	TB I, II.
13	WGL	Preisausschreiben für einen Wettbewerb um einen aufzeichnenden Beschleunigungsmesser für Flugzeuge.	ZFM, 1913, p. 199.
14	Wilh. Hoff	Neue aufzeichnende Kraftmessgeräte und einige Messungen im Flugzeug.	ZFM, 1914, p. 4.
15	W. Stieber	Die Messnabe für Flugzeuge	TB III, p. 221.
16	Wilh. Hoff	Ermittelung der Seilkräfte in Flugzeugtragkabeln während des Fluges.	ZFM, 1914, p. 149.
17	Do	Seilkraftmessungen	TB I, p. 61.
18	Stelmachowski	Belastungen und Berechnungen von Heeresflugzeugen.	TB III, p. 187.
19	Dr. E. Everling (deutsch)	"Die Weltflugnormen" des International Aircraft Standard Board.	Selbstverlag der DVL, Berlin, 1918.
20	C. Wolff	Festigkeitsversuche an Schäftungen von Kiefernholz.	TB II, p. 127.
21	E. Unger und E. Schmidt	Duralumin	TB III, p. 229.
22	Dr. Ing. Rudolf Haas und Dipl.-Ing. Alexan. Dietzius.	Stoffdehnung und Formänderung der Hülle von Prall Luftschiffen.	Verlag Julius Springer, Berlin, 1913.
23	A. Pröll	Zur Frage der Festigkeit von Tragflächenbespannungen.	ZFM, 1915, p. 26.
	Do	Versuche mit Stoffen zum Bespannen von Tragflächen.	TB III, p. 57.
	Do	Der Stoff auf den Tragflächen	TB III, p. 234.
	Do	Vorschriften für die Untersuchung von Bespannungsstoffen.	TB III, p. 282.
	Do	Tragflächendurchbiegung und Stoffbeanspruchung.	ZFM, 1919, p. 121.
24	L. Grüter	Über die Anwendung des Knotens im Flugzeugbau.	ZFM, 1919, p. 266.
25	J. Ratzersdorfer	Probleme der Statik	Zeitschrift für angewandte Mathematik und Mechanik, Berlin Jahrgang, 1921, Heft 1, p. 47.
26	A. van Gries	Flugzeugstatik	Verlag Jul. Springer, Berlin, 1921.
27	Müller-Breslau	Statik der Baukonstruktionen	Bd. II, 2. Abt. S. 286.
28	Wilh. Hoff	Flugelfestigkeitsprüfungen	ZFM, 1916, p. 29.

6. LIST OF ILLUSTRATIONS.

1. Air forces on airplane.
2. Lilienthal's polar diagram.
3. Coefficients c_a and c_g in relation to angle of attack α.
4. Coefficients c_w and c_m in relation to angle of attack α.
5. Coefficients c_n in relation to angle of attack α.
6. Distance s of center of pressure from leading edge for various load cases in relation to angle of attack α.
7. Air force inclination λ to chord in relation to angle of attack α.
8. Resolved normal load N on spars.
9. Spar loads V and H in relation to angle of attack α.
10. Four load cases on wings.
11. Load case A: Pulling out of a dive (or glide).
12. Load case B: Glide.
13. Load case C: Dive.
14. Load case D: Flying upside down.
15. Distribution of wind forces along wing chord for load cases A, B, C, and D. Moment about leading edge.
16. Lateral distribution of wing forces.
17. Angles of stagger β and crossing angle of chords ζ of a biplane.
18. Load case A: Pulling out of dive.
19. Load case B: In a glide.
20. Load case C: In a dive.
21. Load case D: When flying upside down.
} Relation between loads on upper and lower wings.
22. Coefficient k in relation to angle of attack α.
23. Load cases on horizontal negative tail plane and elevator.
24. Bendemann's measuring device.
25. Tensiometer diagram.
26. Tensiometer.
27. Tensiometer attached to wire.
28. View of Alb B II.
29. Resolving of load C into two components.
30. Load factors in relation to angle of attack α.
31. Loads for strength calculation of ribs.
32. Factor c in relation to the total weight G of the airplane.
33. Loads on landing gear.
34. Test of spar.
35. Structure for wing tests.
36. Wing test for Fok E V; load case A.
37. Wing test for Alb D Va; load case C.
38. Deflection of spars of Fok E V for case A, with load 5 times the required load.
39. Deflection of spars of Fok E V for case B, with load 3.5 times the required load.
40. Deflection of spars of Han Cl V for case D, with load 3 times the required load.
41. Deflection of spar of Han Cl V for case B, with load 3.5 times the required load.
42. Fuselage test for Ru D I.
43. Device for impact testing of tires.
44. Illustration of Betz formula.
45.
46.
47.
48.
} Diagrams for spar calculation.
49.
50.
51.
} v curves.
52. Curve showing determinant D of denominator in relation to load factor V.