NATIONAL ADVISORY COMMITTEE
FOR AERONAUTICS

MAY 29 1923
MAILED

TO: Mr. Truscott

TECHNICAL NOTES

NATIONAL ADVISORY COMMITTEE FOR AERONAUTICS.

No. 142

ADAPTATION OF AERONAUTICAL ENGINES TO HIGH ALTITUDE FLYING.

By K. Kutzbach.

From Technische Berichte, Volume III, No. 4.

May, 1923.

NATIONAL ADVISORY COMMITTEE FOR AERONAUTICS.

TECHNICAL NOTE NO. 142.

ADAPTATION OF AERONAUTICAL ENGINES TO HIGH ALTITUDE FLYING.*

By K. Kutzbach.

Summary.

1. Limits of engine output.

2. High altitude engines.

3. Influence of air density on proportions of mixture.

4. Methods of varying proportions of mixture.

5. Automatic prevention of fuel waste.

6. Design and application of air pressure regulators to high altitude flying.

1. Limits of Engine Output.

The determining factor in the regulation of aeronautical engines is, in the first instance, the demand for maximum output during the whole climb, in so far as this is possible without seriously affecting reliability. In the second place, the fuel consumption should be kept as small as is consistent with the maintenance of the first condition.

The maximum engine output expressed in horsepower -

$$N_e = \frac{M\,\omega}{75} \qquad (1)$$

on the shaft (torque), or

*From Technische Berichte, Volume III, No. 4, pp. 112-134. (1918)

$$N_e = \frac{\Sigma P \times v_m}{75} = \frac{\Sigma (F \times p_e)\ v_m}{75} \qquad (2)$$

effective piston power, in which $p_e = p_i = p_r =$ the mean effective pressure on the piston, which varies with the altitude, and $v_m \pm$ the average piston speed. In order to determine the extent to which p_e or N_e depend on the altitude, it is necessary to start from the indicated M.E.P. p_i, or from the indicated power N_i. Making use of the symbols explained in a previous paper by the author* in which the suffix o denotes the values which hold at 15°C and 760 mm mercury, the absolute heat in the fuel per unit volume of mixture is $H_o\ \eta_l\ \mu$ in greater calories per m^3, or in lesser calories per liter. If this "absolute" heat per liter is converted into work with an efficiency of transformation η_e, the work in kgm per cubic meter of mixture with piston area $F(m^2)$ and stroke $s(m)$ is

$$F\ [p_i]\ s = 427\ \eta_e\ (H_o\ \eta_l)\ \mu,$$

when p_i is expressed in kg/m^2 and $F\ s = m^3$

In kg/cm^2, therefore, -

$$p_i = 0.0427\ \eta_e\ (H_o\ \eta_l)\ \mu \qquad (3)$$

and

$$(p_i)_o = 0.0427\ \eta_e\ (H_o\ \eta_l)\ . \qquad (3a)$$

There are two natural limitations to the mean piston pressure P. One is imposed by the structural strength, especially with regard to the risk of failure of the weakest parts, as well as by the cooling requirements of the working parts (to avoid hot

* Technische Berichte, Volume III, No. 1, p.15.

bearings) and of the combustion space (to avoid preignition). The other, the charging limit, is restricted by the values of F, η_e, H_o, η_l and more especially of the ratio of air densities $\frac{\gamma}{\gamma_o}$, as soon as η_e and $H_o\,\eta_l$ have reached their maximum values.

If we draw the curve of indicated limiting powers, which correspond to these limiting values of the mean effective piston pressure, with constant angular speed, as a function of the air density, we obtain for older types of aeronautical engines, a figure (Fig. 1) in which the limit of mechanical strength lies above the charging limit and only cuts it at $\mu \overset{=}{>} 1$. The limit of mechanical strength is the less likely to be reached, that is, the weight of material in the engine is more imperfectly used, the smaller the air denisty, and the greater the flight altitude. In Fig. 1, the relation between air density and flight altitude Z, for the temperature given on the altitude curve is conveniently read off, whereby the disadvantages of the older types of engines are brought out still more clearly. Lastly, the frictional losses, N_r, are drawn in Fig. 1, including the total expenditure of energy for friction in driving and valve gears, for the induction of the mixture, the exhaust, cooling water, oil and fuel, and for generating the ignition current.

In engines otherwise of similar construction and lubrication, this expenditure of energy depends for the most part on the dimensions of the driving mechanism, indirectly on the mechanical limits of output, and may perhaps be taken, on the average, as 15 (to

20) per cent of the indicated work $(N_i)_o$ at sea level, the N_r curve cutting the induction limit at $\mu = 0.1$, so that at $\mu = 0.1$, the frictional loss is taken as 10 per cent of $(N_i)_o$.

Since, however, it is not actually $(N_i)_o$ but the brake horsepower $(N_e)_o$ which is measured at ground level, it is convenient to proceed with the evaluation of the power curves of engines that have been tested under altitude conditions, by joining the end point A for the power $(N_e)_o$ measured when $\mu = 1$ to the point B, on the horizontal axis, which corresponds to $\mu = 0.1$ (See Fig. 2). This straight line then intersects the vertical axis at the origin O. By assuming the frictional loss N_r, the value of $N_i = N_e + N_r$ is also determined. The theoretical upper limits, the charging limit, and the mechanical strength limit are common for N_i and N_e. The propeller resistance decreases in proportion to the density of the air, according to the straight line AC, that is to say, the revolution speed of such engines becomes less as the height increases.

2. High Altitude Engines.

The great decrease in the charging limit with increasing altitude suggested an improvement in the utilization of the weight of the active parts, by increasing the charging limit so that the power curve of the engine follows the horizontal line of the mechanical strength limit up to a certain working altitude Z_b. The maximum output, which depends upon the conditions when charg-

ing the cylinders, is governed by the quantities F, η_e, H_o, η_l and μ, of which η_l is, generally, the only one that cannot be increased, because its value is already practically unity with sufficient cross-sections in the induction system. The remaining quantities can, however, be increased simultaneously, namely:

1. The piston area, F,
2. The efficiency of the transformation of energy η_e,
3. The heat content of the mixture H_o,
4. The ratio of the densities of the intake air and the atmosphere μ.

Hence, there are four methods of developing high altitude engines, which may, under certain conditions, be used simultaneously. The distinguishing mark of a high altitude engine is that its power curve shows a bend at the working altitude Z_b (See Fig. 3). Suitable means of regulation must be adopted, in order to prevent the power of the engine from exceeding the mechanical limit below the working altitude, as otherwise the endurance of the engine is endangered.

1. Increasing the piston area F (without altering the dimensions of the other working parts, and consequently the frictional losses) is the most effective means of changing any aeronautical engine into a high altitude engine, which, of course, requires a corresponding increase in the valves and pipes if there is to be no decrease in η_l. If D_o and D are the respective diameters, we get:-

For Z_b =	2 6562	3 9843	4 13123	5 16404	6 19685	7 km. 22966 ft.
or μ =	0.83	0.74	0.67	0.59	0.53	0.47
$\frac{D}{D_o}$ =	1.10	1.16	1.23	1.30	1.37	1.45

2. The efficiency of transformation of energy η_e, can be increased by increasing the compression ratio Σ (super-compression) as, for instance, by using deeper pistons; by this means, the thermal efficiency and the speed of ignition are increased and improved combustion is attained.

Increasing the compression beyond the limit of previous experience is only possible when the cooling of the cylinder walls is increased at the same time, or when the absolute heat per liter $H_o \eta_l \mu$, in the cylinder is decreased, since the cooling effect with small heat content is relatively greater than with large heat content. The danger of spontaneous ignition and injury of the spark plug with increased compression is to be feared less, the lower the mechanical limit is below the maximum possible value of the charging limit, that is, the more the piston area is increased. Improvement of η_e is shown more in decreased fuel consumption than in increased power. Besides, Σ is limited by the maximum permissible explosion pressure and by the limitations of mechanical strength.

3. In order to increase the useful heat value H_o, of the mixture, it is possible to employ mixtures with a greater heat

of combustion than the gasoline-air mixture. As previously shown* for the theoretical mixture, without excess or deficiency of air, $H_o \sim 800$ kg. cal/m^3, compared with $H_o \sim 3800$ kg. cal/m^3, for a mixture of gasoline and pure oxygen. In order, therefore, to increase H_o by 10, 20, 30, 40, 50%, it is necessary to replace 2.6, 5.3, 8.7, 11.8, 15%, of the air by oxygen, and to mix it with the corresponding quantity of fuel. The supply of oxygen may be obtained from explosives or from other carriers of oxygen. The disadvantage of using oxygen, the higher temperatures of combustion following from the reduced proportions of nitrogen in the mixture, will be less harmful, just as with super-compression, the less the absolute heat per liter of the cylinder. It is particularly easy to increase H_o by supplying oxygen in the case of large engines, as, for instance, in war types of airplanes, and the more easy, the smaller the compression ratio.

Fig. 4 shows the influence of increasing F, η_o and H_o on the shape of the charging limit and power curves. It is to be noticed that the frictional losses remain the same in all cases, since no new mechanical losses come into play.

4. The density of the intake air can be increased by using a compressor, either geared directly to the engine or driven separately, whose available output determines the intersection of the charging and the mechanical limits (Fig. 5 - engines with initial compression).

The advantage of this method is that it is not necessary to

* Technische Berichte, Volume III, No. 1, p. 17.

alter the available types of engine. The disadvantage lies in the increase in the friction losses by N_g, in consequence of the expenditure of power in driving the compressor; and further, in the heat dissipation of the cylinder walls remaining constant with increasing altitude. It is, however, possible temporarily to attain a very considerable increase in power under suitable conditions.

A peculiar solution of the high altitude engine lies in the decrease of the piston diameter without alteration of the other working parts, as far as the piston pin permits, and an increase in the initial compression ratio by 1.5 or 2 atmospheres. This solution offers the advantage of smaller valves, pistons and pipes and of decreased weight, on account of the compact design. It deserves attention in the designing of very large engines, especially in combination with an exhaust-gas turbine on the shaft of the compressor, since the cylinders and valves may then have convenient dimensions.

The power of such an engine (Fig. 6) is, apart from the compressor, much smaller than that of an ordinary engine, but it can be regulated within wide limits by means of the compressor pressure, a great advantage for large types of airplanes with a central compressor.

3. Influence of Air Density on Proportions of Mixture.

The charging limit of an engine is generally reached by first bringing η_l to its maximum value and then increasing H_o; for instance, by increased supply of fuel until there is no further

increase in the speed, the torque or the mean effective pressure P_e. The fuel supply with most rotary engines depends principally on the static head between the fuel tank and the carburetor jet, which is regulated by means of a cock or a needle valve, since the suction pressure produced by the flow of air at the jet is generally slight.

The fuel supply to rotary engines is, therefore, only slightly influenced by the air density. It remains, in fact, nearly constant with increasing altitude, while the weight of the air decreases with the density. The result is an excess of fuel in the air available for combustion, and an increasing waste of fuel with increasing altitude, to which the pilot puts a stop only by turning the fuel cock when he observes a perceptible decrease in the revolutions. It is still worse when a pump injects a measured amount of fuel for each stroke, notwithstanding the fact that the available weight of air for combustion decreases with the altitude. Fuel is, therefore, generally wasted with these two systems, unless the fuel feed is diminished in proportion to the air supply by suitable means, either automatically or by hand.

There is less variation in the proportions of the mixture with changing air density with the most common types of carburetor of the present day, in which the fuel is exposed only to the dynamic reduction of pressure in the air current in a choke tube, the level being maintained by a float or an overflow arrangement.

If the ratio of the mass of air taken in by the engine at an arbitrary height and at ground level $\frac{L}{L_o}$, is plotted for constant

revolutions and also for constant air velocity w_L, (Fig. 7) the result will be a straight line, and the decrease in pressure

$$\Delta p = \frac{m\ w_L^2}{2} = \frac{\gamma_L}{g}\ \frac{w_L^2}{2}$$

also decreases with increasing altitude according to this straight line. The proportion $\frac{B}{B_o}$ of the quantities of liquid fuel at an arbitrary altitude and at sea level, which, beyond the Reynolds critical velocity, flow according to the formula

$$w_B = \sqrt{2\ g\ h} = \sqrt{2\ g\ \frac{\Delta p}{\gamma_B}}$$

decreases according to a parabolic curve, because γ_B always remains constant. It, therefore, follows that the heat content H_o, reduced to 15°C and 760 mm mercury, which is determined by the proportions of the mixture, increases with decreasing air density, according to the formula

$$\frac{H'_o}{H_o} = \sqrt{\frac{\gamma_{L_o}}{\gamma_L}} = \frac{1}{\sqrt{\mu}}\ * \qquad (4)$$

For Z =	2 6562	3 9843	4 13123	5 16404	6 19685	7 km. 22966 ft.
we get μ =	0.83	0.74	0.67	0.59	0.53	0.47
and $\frac{H'_o}{H_o} = \frac{1}{\sqrt{\mu}}$	1.10	1.16	1.23	1.30	1.37	1.45

*Compare Bader "Die Leistungsabnahme der Flugmotoren mit der "Hohe" (Decrease in power of aeroplane engines with altitude) - Technische Berichte, Volume II, No. 1, p. 95.

The flow of fuel below the "critical velocity" is directly proportional to the fall of pressure in the carburetor, and therefore, also to the density of the air. In this case, there is, therefore, no change in the heat equivalent on account of the altitude. Much the same occurs with gaseous fuels and with fuels gasified in surface carburetors or vaporizers, as their density γ_B decreases with the atmospheric density. These conditions, however, are seldom or only with difficulty, realized with aeronautical engines and have great disadvantages in regulation from dead load to full load. But transitions are quite possible between the two limiting cases.

4. Methods of Varying Proportions of Mixture.

The problem of maintaining the heat content H_o, of the mixture independent of the altitude with the most common jet and spray carburetors acting as injectors, will, therefore, first be considered where expedient or necessary.

The accurate equation for injector pumps gives the answer to this question. The injector is a closed branch of a stream by which the fluid to be delivered is supplied to one of the branches of the stream by a special delivery and regulating arrangement such as, for instance, a float or an overflow.

In Fig. 8, the branch pipe is a closed branch of the main pipe and receives the fuel through a pipe B. In Fig. 9, the branch pipe is attached to a parallel pipe. Between the spaces in front

of and behind the nozzles, of which several may be arranged in series, there prevails a pressure drop Δp, (in kg/m² or in mm water column) and in the mixing space behind the nozzles a reduced pressure p_u. If it be further assumed, for the sake of simplicity, that the velocities of air and fuel are negligible compared with the maximum velocities w_L and w_B in the nozzles, then there applies to the final velocities the known law

$$w = \sqrt{2\,g\,\frac{\Delta p}{\gamma_m}} \qquad (5)$$

If γ_f is the density in kilograms per cubic meter in the section f, then $\gamma_m = a\,\gamma_f$ is a mean density for gases or vapors of which the density is diminished in its flow through the nozzle from the initial density γ, to the final density γ_f, so that $a > 1$. The weight of the flow in unit time through the sectional area f in m², of the nozzle, where the velocity w prevails is

$$Q = f\,\gamma_f\,w \qquad (6)$$

where γ_f is the density in this section, but not the average density. Substituting for w from equation (5) we get

$$Q = f\,\gamma_f\sqrt{2\,g\,\frac{\Delta p}{a\,\gamma_f}} = f\sqrt{\frac{\gamma_f}{a}\;2\,g\,\Delta p}.$$

In this equation $\frac{\gamma_f}{a}$ is still smaller than the density at the narrowest portion of the nozzle, and may, therefore, be considerably below the density of the outer atmosphere. If, instead of the density γ_f at section f, we introduce the density γ in front of the nozzle $\gamma = b\,\gamma_f$ in which $b > 1$, we then obtain

$$Q = f\sqrt{\frac{2g}{a\ b}\ x}\ .\sqrt{\gamma\ \Delta p} \qquad (7)$$

For liquids, a and b ; 1.

We then obtain for the proportion of liquid fuel to air, from equation (7)

$$\boxed{\frac{Q_B}{Q_L} = \frac{f_B}{f_L}\sqrt{a\ b}\ \sqrt{\frac{\gamma_B}{\gamma_L}}\sqrt{\frac{\Delta p_B}{\Delta p_L}}\ .} \qquad (8)$$

This is the general equation for spray carburetors which is immediately applicable to Fig. 8. A sufficiently accurate analysis, which, however, would here lead us too far, shows that we can put approximately

$$\sqrt{a\ b} \sim \frac{p + \Delta p_L}{p}$$

in which p is the absolute pressure.

For the heat equivalent of the mixture, reduced to $(\gamma_L)_o = 1.226$ for air, we then have

$$H_o = \frac{Q_B\ H_u}{Q_L(\gamma_L)_o} \qquad (9)$$

and

$$\boxed{H_o = 1.226\ H_u\ \frac{f_B}{f_L}\sqrt{a\ b}\sqrt{\frac{\gamma_B}{\gamma_L}}\sqrt{\frac{\Delta p_B}{\Delta p_L}}\ .}$$

It is only assumed, for this equation, that equation (5) would apply to liquid fuel as well as to air. For liquids, however, there is a "critical velocity"* below which equation (5) is no longer sufficiently exact. The critical speed for water in

* "Hutte" 22d edition, Vol. I, pp. 280, 294 and 350.

cylindrical pipes is given by the table

d =	1	2	3 mm. diameter (approximate) at
w ~	3.5	2.5	2 m/sec. corresponding to velocity
Δp ~	600	300	200 mm. head of water.

For other fluids, w is greater in the ratio $\frac{\eta}{\gamma}$, where η is the coefficient of viscosity, and is therefore, approximately the same for gasoline. Modifications of equation (5) must, however, be used* below this "critical velocity" and are most pronounced below the "lower critical velocity," which is 50 to 100 times smaller than the upper limit.** As the fall in pressure at the nozzle outlet in ordinary aeronautical engine carburetors, under full load at sea level, amounts to from 1000 up to 2000 mm. head of water, such variations come into consideration rather with low revolution speed or with specially fine jets.

From equation (8), provided no alterations are made to the carburetor and that $\frac{f_B}{f_L}$ and $\frac{\Delta p_B}{\Delta p_L}$ remain equal for all altitudes, it follows that H_o must increase in proportion to $\frac{1}{\sqrt{\gamma_L}}$. If H_o is to remain unaltered, conversely, we must have

$$\frac{f_B}{f_L}\sqrt{\frac{\Delta p_B}{\Delta p_L}} = c\sqrt{\gamma_L} \qquad (11)$$

we thus have the means available whereby H_o may be kept constant while altering either $\frac{f_B}{f_L}$ or $\frac{\Delta p_B}{\Delta p_L}$ or both simultaneously, and have to distinguish two cases:

* Heller, "Motorwagen," p. 81 and following.
**Hutte, 22d edition, Vol. I, p. 350.

Case 1.

$$\left\{\begin{aligned} \frac{\Delta p_B}{\Delta p_L} &= c_1 \\ \frac{f_B}{f_L} &= \frac{c}{c_1}\sqrt{\gamma_L} = c'\sqrt{\mu} \end{aligned}\right\} \qquad (12a)$$

Case 2.

$$\left\{\begin{aligned} \frac{f_B}{f_L} &= c_2 \\ \frac{\Delta p_B}{\Delta p_L} &= \left(\frac{c}{c_2}\right)^2 \gamma_L = c''\ \mu \end{aligned}\right\} \qquad (12b)$$

1. Alteration of cross-section ratio $\frac{f_B}{f_L}$ with unaltered pressure-drop ratio $\frac{\Delta p_B}{\Delta p_L}$.

In order to keep $\frac{\Delta p_B}{\Delta p_L}$ constant, air and fuel are allowed to arrive at the nozzles under the same initial pressure, most conveniently with both at the pressure of the outer air or of the initially compressed air (which necessitates a float or an overflow for the fuel), while the mouth of the fuel jet is in front of or in the narrowest part of the choke. f_L is then the section of the choke at the mouth of the fuel jet, the pressure being equalized at this point. With decreasing air pressure, f_B must decrease, or f_L increase. f_B and f_L can be measured exactly and changes can easily be determined graphically.

$\frac{f_B}{f_L}$ can be changed:

(1) By displacing the fuel outlet in the fixed air choke tube (Fig. 10).* The position of the actual fuel jet itself in the fuel pipe is also subject to alteration so that several solutions are possible.

(2) Displacement of the air choke tube relative to the fuel pipe. Specially numerous dispositions are in this way possible (Figs. 11 to 13).

(3) Alterations in the sectional area of the fuel jet by a needle valve in the jet (Fig. 14), or in an auxiliary or supplementary jet (Fig. 15), or by an auxiliary system of jets (Fig. 16), or by a series of auxiliary orifices.

(4) Alterations in the air cross-sections in the main choke tube, or in an auxiliary choke tube (Fig. 17), or of the auxiliary jet devices, or in a series of jets by means of sliding or piston valves, cocks, flap-valves or other kinds of valves (Fig. 18).

2. Alteration of the pressure drop ratio $\frac{\Delta p_B}{\Delta p_L}$ with constant section ratio $\frac{f_B}{f_L}$.

The ratio $\frac{f_B}{f_L}$ is not changed so long as the jets remain unaltered in section and position. $\frac{\Delta p_B}{\Delta p_L}$ can then be altered by inserting resistances in the pipes. Such resistances must, however, consist of choke tubes as free as possible from friction, if the adjusted ratio $\frac{\Delta p_B}{\Delta p_L}$ is to remain constant with changing external pressure. This condition is not fulfilled if, for instance, nar-

* The free-hand sketches - Figs. 9 to 22, 29, 30, 34, 35, 37 & 38, together with the text referring thereto, are taken from a report submitted by the author more than a year ago.

row slits are used as resistance in the fuel supply pipe. In accordance with equation (13) it is necessary, as the air density in the choke tubes decreases, either to reduce the pressure drop in the fuel jet so that the fuel enters with smaller velocity and in reduced quantity, or to increase the pressure drop in the air choke tube in comparison with that in the fuel jet. The changes in $\frac{\Delta p_B}{\Delta p_L}$ can, therefore, be effected by:

1a. A control in the form of a needle in a short jet (Fig. 19), giving a variable pressure drop in front of the fuel jet.

By advancing the needle, the pressure drop is reduced in the main jet and also the quantity of fuel.

1b. A control giving a variable pressure drop in front of the air choke tube in the form of a flap valve, cock or similar contrivance (Fig. 20). By opening this control, the total resistance of the air channel is diminished and the ratio $\frac{\Delta p_B}{\Delta p_L}$ falls, the quantity of air is increased and the mixture becomes poorer. The opening must, consequently, be increased with decreasing air density.

2. By connecting the overflow or float chamber, which is excluded from atmospheric pressure, with various points in the air choke tube, (Fig. 21). Provided the air choke tube is shaped so that the pressure drop therein very nearly follows a straight line, the required movement of the connecting pipe, proportional to the external pressure, may be effected by means of a barometer. The connecting pipe may be moved as shown in Fig. 10. The connection between the enclosed float chamber and a fixed position of the air

choke tube is made in the Zenith carburetors of French and English aeronautical engines. It is put into the circuit by hand at specified altitudes.

3a. Alteration in the pressure in the fuel jet by connecting the tightly sealed overflow or float chamber to an auxiliary air pipe with variable passage. The auxiliary air is often called "brake air" (compare, among others, the Gillet-Lehmann Air Regulator).

3b. Alterations in the pressure p_u, behind the fuel jet by incorporating the jet outlet in an auxiliary air channel (brake air channel, compare Fig. 9) with a variable bore (Fig. 23). This design is adopted, among others, in the Pallas carburetor, usually, however, with a non-variable bore for the auxiliary air lead. The air-tightness of the float chamber is no longer maintained.*

On surveying the various possible designs for adjustable carburetors, it is found that:

Adjustment of the fuel jet, as applied by Fiat of Turin, for example, requires but little power; but it has the disadvantage that the adjustable parts in the fuel channel require stuffing boxes at their ends, which introduce leakage and variable frictional resistances. A still worse feature is the sensitiveness of the adjustment on account of the small sectional area of the jet, due to impurities in the fuel. The brake air choke tubes, shown in Figs. 22 and 23, do not have these disadvantages. These types are, therefore, suitable for automatic barometric regulation, when the

* This method is applied in the latest models of Zenith altitude carburetors on Hispano-Suiza and Salmson engines.

amount of adjustment is determined empirically, since barometers exerting small mechanical forces, in fact, simple aneroids, can be used for the purpose. For hand adjustment, the solution shown in Fig. 21 is very convenient, especially when the connecting tube is hinged as in Fig. 10.

On the other hand, change in air density requires greater forces for the adjustment (Figs. 18 and 20). These solutions, however, have the peculiarity that they exert a throttling action with higher air density, as at ground level. This is undesirable in older types of aeronautical engines, but it is desirable in all high altitude engines in which charges must be reduced at ground level, in order not to exceed the limit of mechanical strength. These solutions are, therefore, the very thing for high altitude engines, because they combine adjustment up to the mechanical limit, together with automatic correction of the mixture for the energy of explosion.

5. Automatic Prevention of Fuel Waste.

In addition to barometric regulators, which will be treated connectedly in the next section, the following simple methods come into consideration:

a. The use of poor mixtures.

Bader* has already pointed out that fuel consumption and climbing capacity can be improved by working, at ground level, not with the mixture which produces maximum power, but with a poorer mix-

* Technische Berichte, Volume II, No. 1, p. 95.

ture (smaller jet) so that the charging limit is reached say, at a point A (Fig. 24), which corresponds to $\mu < 1$. This proposal is, however, practicable only to a certain extent, as an engine which works with a poor, slow-burning mixture at ground level or at low altitudes has a tendency to retarded ignition, detonation and undue heating. It adapts itself, however, as Fig. 24 shows, to a low altitude engine, which, in this way, requires no additional regulation for altitude.

This can be carried further when the maximum charge (Fig. 25, H-position of the throttle lever) is only used for greater altitudes, and another (the V-position) nearer the earth, in which the mixture is richer due to the smaller air ratio $\frac{L}{L_0}$ in the carburetor designed in accordance with Figs. 17, 18 or 19. By gradually changing from the "V" position to the economical "H" position during ascent, the full advantage of fuel economy may be attained by the high altitude engine. The characteristic feature of this design lies in the decrease in the speed of the engine at the "H" position as compared with the "V" position, and this, at the same time, is an indication to the pilot not to open the carburetor too soon.

b. Utilization of Constant Intake Pressure for High Altitude Engines.

In all high-altitude engines which maintain the mean pressure up to the limit of mechanical strength by throttling, that is, by maintaining constant intake pressure at the cylinders, the heat

equivalent of the fuel mixture may be kept constant, up to the corresponding altitude, if the overflow chamber is connected by a branch pipe to the air intake at points of constant pressure (Fig. 26). The air intake pressure in this case is not kept constant by the supply throttle valve D_V, but by a special altitude throttle valve D_H, placed in front of the carburetor and, if an initial compressor G, is used, generally placed also in front of the latter. The fuel is preferably supplied by the enclosed pump P and by the by-pass overflow pump P_r. As long as the absolute pressure behind the altitude throttle valve does not change, the heat equivalent of the mixture also does not change. Adjustment of the altitude throttle valve should preferably be made after reading the absolute pressure p_s behind it, which is read off from the barometer B, or acts indirectly on the altitude throttle valve D_H, so as to leave the pilot to work only the pilot throttle D_V.

c. Combustion of the Excess Fuel by Means of Oxygen.

The application of oxygen to increasing the power can be effected simply and only when the fuel need not be increased simultaneously. Fig. 27 shows the oxygen content of the air and at the same time the excess of fuel, for the complete combustion of which, a small amount of oxygen suffices.

By the addition of oxygen, the torque rises and the power increases as $\frac{\sqrt{\mu}}{\mu} = \frac{1}{\sqrt{\mu}}$ with constant speed. The additional oxygen is, by volume, $\frac{21}{100}(\sqrt{\mu} - \mu)$ times the volume of air required at

ground level. If the power with additional oxygen is denoted by N_s, then the proportionate increase in the power will be

$\frac{N_s - N_i}{N_i} = 100 \frac{\sqrt{\mu} - \mu}{\mu}$ times the indicated power, or,

$\frac{N_s - N_i}{N_e} = 100 \frac{\sqrt{\mu} - \mu}{\mu - 0.1}$ times the brake horsepower, on the basis that $N_r = 0.1\ (N_i)_o$.

We therefore have for different flight altitudes:

Z =	6562 2	9843 3	13123 4	16404 5	19685 6	22966 7	ft. km.
μ =	0.83	0.74	0.67	0.59	0.53	0.47	
$21\ (\sqrt{\mu} - \mu)$ =	1.8	2.5	2.9	3.8	4.1	4.4	%
$\frac{N_s - N_i}{N_i}$ =	10	16	23	30	37	45	%
$\frac{N_s - N_i}{N_e}$ =	11	19	25	37	46	58	%

It is thus possible to increase the useful torque by about 60% at an altitude of 7 km (22966 ft) by the addition of pure oxygen while the friction losses do not increase.

d. The Use of Chokes with Flow in Strata.

Below the "lower critical velocity" of fluids, the velocity of the outflow is:

$$w = c \frac{\Delta p}{\eta}$$

where η is the coefficient of viscosity of the fluid depending essentially on temperature.

Substituting this, instead of equation (5), in equation (6), we have instead of equation (8):

$$\frac{Q_B}{Q_L} = \frac{f_B}{f_L} c \sqrt{ab} \frac{\gamma_B/\eta}{\sqrt{\gamma_L}} \frac{\Delta p_B}{\sqrt{\Delta p_L}} \tag{8a}$$

If $\Delta p_B = \Delta p_L$, as with most carburetors, we have

$$\frac{\Delta p_B}{\sqrt{\gamma_L}\sqrt{\Delta p_L}} = \sqrt{\frac{\Delta p_L}{\gamma_L}} = \frac{w_L}{\sqrt{2g}}$$

and, therefore,

$$\frac{Q_B}{Q_L} = \frac{f_B}{f_L} c \frac{\sqrt{a\ b}}{\sqrt{2\ g}} \frac{\gamma_B}{\eta} w_L \tag{10}$$

As, however, w_L does not change at first, with decreasing atmospheric density, the heat value, in this instance, is independent of the atmospheric density.

The numerical interpretation is recognized in the assertion previously made, viz: that the influence of the air density is less with low fuel velocities, or with regulating jets which have narrow orifices and large frictional surfaces, than, for example, with circular sections and large pressure drops. Against this, such "friction" jets have, however, the great drawback that they depend on the viscosity of the fuel, and consequently on its temperature, and are easily blocked. At present, they are without practical importance, except perhaps for mitigating the effect of altitude.

6. Design and Application of Air-Pressure Regulators for the Automatic Control of Engines.

The ultimate aim in adapting an aeronautical engine to high altitude flights is still the production of an automatic and reliable carburetor, which will satisfactorily deal with all changes in atmospheric density and leave the pilot control over the airplane. As primary problems in automatic regulation, the following points come into consideration:

1. Setting an upper limit to the heat equivalent of the mixture, in all engines, in order to prevent waste of fuel.

2. Setting an upper limit to the mean piston pressure, in engines with super-compression, or increased piston area with initial compression, by limiting the intake pressure behind the supply throttle valve, or the reduction of pressure p_u, in front of the supply throttle valve.

3. Setting an upper limit to mean piston pressure, in engines with oxygen supply, by regulating the quantity of oxygen supplied.

4. The maintenance of constant revolution speed with mean constant piston pressure, most simply by adjustable propellers, as soon as the relation between blade position, density of atmosphere, and revolution speed is known.

5. As soon as an efficient air density regulator is available, it may also be used to maintain a constant temperature of the cooling water, since there is an experimentally determinable re-

lation with the atmospheric density. Blanketing the radiator may, therefore, also be regulated by the air density.

It will be possible to employ an aneroid barometer for regulating and controlling the carburetor, as soon as the relation between the required positions of the control parts concerned and the air density can be definitely established by calculation or experiment. The requisites for such an apparatus designed for external air pressure are:

1. A mass of air enclosed in a chamber with a movable wall. When the air-tight and freely-moving piston (Fig. 28), is exposed to a decreasing air pressure p_a, a displacement will take place. The work done is:

$$\Xi = P_m s = F p_m s$$

or, starting with the total difference of pressure Δp, and the mean volume V_m

$$\Xi = \frac{\Delta p}{\kappa} V_m$$

in which κ is the index of the expansion curve. If care is taken that the enclosed air has approximately the same temperature as the external air, it follows that the volume is a correspondingly exact measure of the density of the outer air.

To construct such chambers, with pliant walls, we may use leather, india rubber, goldbeater's skin, etc. (Figs. 29 to 33)* or easily springing walls of elastic metal, india rubber or similar materials (Figs. 34 and 35), or pistons with pliant or elastic packing, or liquid seal (Fig. 36) or purely liquid pistons.

* The regulating box (Fig. 33) is supplied by Lorenzen's propeller factory.

In the displacement of the piston, a variable counter pressure p_f, is exerted (Fig. 28), for instance, on the flexible walls, or on springs taking the load, at the cost of the work required to overcome friction. The less the frictional resistance of the piston itself and of the working parts, the more sensitive is the measuring chamber and the less the momentary difference of pressure between the chamber and the atmosphere, and with it the tendency to leakage.

The disadvantage of the above arrangements is that every change in the mass of the enclosed air calls for adjustment of the control connections. The advantage is, that almost any desired energy can be obtained without great weight, with sufficiently large chambers, which can be packed easily in the fuselage and connected with a measuring chamber.

2. The displacement, producing equilibrium between the external air pressure, a variable force (a spring or load moment) and a constant internal pressure.

As an example of constant internal pressure, zero pressure, produced by a pump and maintained in a chamber with a flexible wall, comes first into consideration. If the walls of the chamber are permanently air-tight, a vacuum box (aneroid barometer)* is sufficient. When the above conditions do not exist, the addition of an air pump or suction pump capable of producing zero pressure

* Such air pressure regulator boxes are supplied, for instance, by Messrs. B. E. Schuch, Hohenzollern Str. 29, Munich, in two sizes.

Diam. mm.	Length mm.	Stroke for a difference of 0.5 atmospheres mm.	ΔP kg.	Net weight kg.
90	70	18	10	0.4
115	85	23	20	0.7

is essential (Figs. 37 and 38).

The available energy is $\Xi = P_m s = F p_m s$, where P_{air} designates the force of a spring which balances the external pressure. The advantage of this type of air density meter, i.e., of actual barometers, is that they depend upon the accuracy of the springs only, so long as the pressure in the chamber remains constant. The most accurate instruments, viz., the mercury barometers, scarcely come into consideration, because they are too heavy.

Barometers according to 1 and 2 may be relied upon to limit the mean piston pressure and also to maintain the mechanical strength limit in high altitude engines, when the piston pressure is regulated by throttling, i.e., by adjustment of η_l. In this case, the most usual one, the absolute air intake pressure is also regulated. If a variation of 0.6 to 0.7 atmosphere is allowed in the absolute pressure, this variation of 0.1 atmosphere, may be utilized for regulation by connecting the barometer with the intake.

The available energy of the regulator is, of course, less than when a much greater difference in the atmospheric pressure is used as a means of regulation; but it has the advantage that the shape of the sliding control is indifferent, as it is unnecessary to ascertain, in advance, the relation between the section of the piston and the drop in the pressure to be regulated. It is most convenient to connect the regulating barometer at a point between the supply throttle D_V and the altitude throttle D_H (Fig. 39). The pressure in front of the supply throttle will then never

exceed the prescribed limit of safe working pressure, for instance, 0.7 atmospheres absolute, and the engine remains equally controllable at all altitudes by means of the supply throttle. Even with initial compression, this regulation is applicable, with corresponding alteration of the control rod, since D_H is mounted in front of the compressor (Fig. 26).

Finally, barometers 1 or 2 may also be used as relays for any desired amount of energy. Fig. 40 shows an example of such application to the indirect production of constant pressure. The pump P produces a pressure which is throttled down to a regulated pressure P of 1.1 to 1.5 atmospheres by the barometer B. Should the back pressure rise unduly, the throttling action of the needle N will increase until the pressure is reduced by artificial leakage of the nozzle D. The back pressure can be regulated as desired by an adjustable spring F, and this determines the initial position of the powerful controlling barometer S.

The application of barometric relays to regulation, itself, (e.g., by means of variable pitch propellers) need not be further illustrated. In practice, there are numerous instances where relays are used to liberate mechanical energy, e.g., wave energy, oil-pressure energy, electro-mechanical energy for indirect regulation, which can find characteristic applications here.

3. Indirect Effect of Atmospheric Density.

a. Fall of pressure in the suction pipe.

According to equation (5), $\Delta p = \gamma_m \frac{w^2}{2g}$; the pressure drop in the choke tube danges with the atmospheric density when the

speed remains constant (Fig. 41). The available energy for a stroke s, of the regulator piston of area F, is

$$E = F\ s\ (\Delta p)_m$$

The reduced pressure behind the nozzle is allowed to act on a piston against the outside air pressure and a light spring. It is necessary to have very light springs and large pistons, since Δp is low; or the piston may be used only as a relay.

b. Air Resistance of a Moving Body.

In this connection the torque or thrust of the propeller comes chiefly into consideration (or even the drag of any portion of the airplane capable of acting on a relay), since such resistance varies with the atmospheric density when the flight speed is constant. If, for instance, the condition is made that the power shall not exceed the limit of mechanical safety, then the corresponding torque or thrust of the propeller must not exceed a maximum value M_b or S_b. The turning moment or the thrust of propellers may be measured by means of a measuring hub or still more simply by suspending the engine from springs that only come into action and actuate a control lever, shortly before the mechanical strength limit is reached. If there is a 10% range ($\Delta M/M_b$ or $\Delta S/S_b$) within which the moment or thrust may oscillate up or down, with throttle wide open, the available power is amply sufficient to control a throttle in front of the carburetor or of the compressor. Fig. 42 shows an arrangement of this kind for controlling the

throttle by the torque. Fig. 43 shows one actuated by the thrust. The main disadvantage, however, of this arrangement, which may be used with all kinds of engines, is that if one cylinder should drop out from failure of spark plug or magneto, the mechanical limit would be exceeded in the other cylinders, unless the pilot should prevent it with the main throttle. The advantage, on the other hand, is that this adjustment always limits the mean pressure correctly, even if the power is increased by increasing η_i or H_o (for instance, by oxygen).

Conclusion.

The purpose of this paper is to present broadly the extraordinarily important field, in which may be applied mechanically reliable designs, without turning to new inventions. Existing rights of inventors or prior users have purposely not been mentioned, since it is at present difficult to define the scope of patents and rights already existing. It should, however, be pointed out that there are still many gaps which permit of free constructive activity. The high altitude engine offers, in any case, to all manufacturers, a grateful field for profound and progressive research.

Translated by
National Advisory Committee
for Aeronautics.

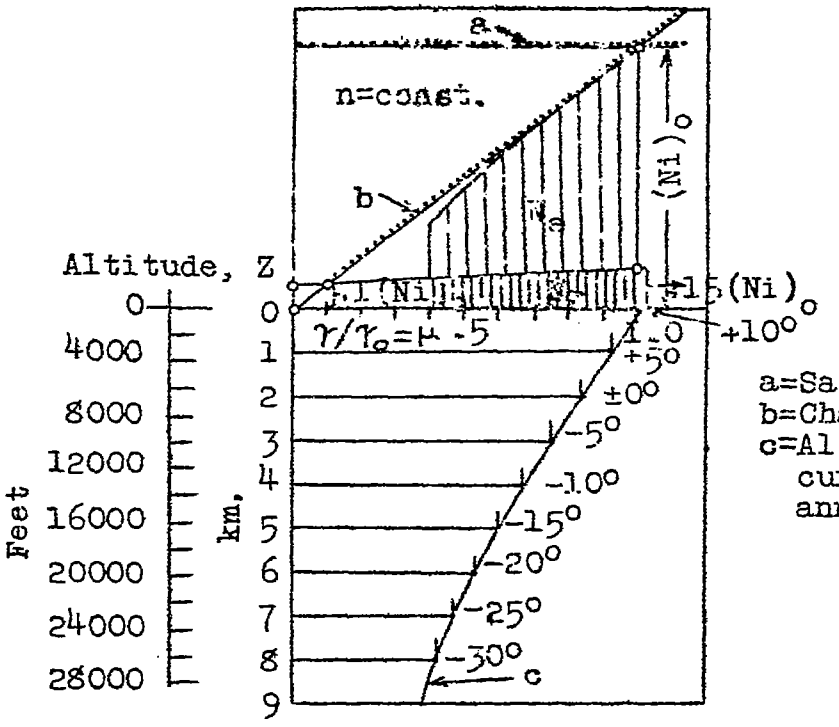

a=Safe working limit
b=Charging limit
c=Altitude density curve for mean annual values

Fig. 1

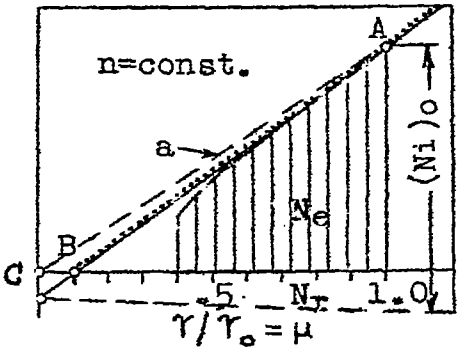

a=Propeller out-put

Fig. 2

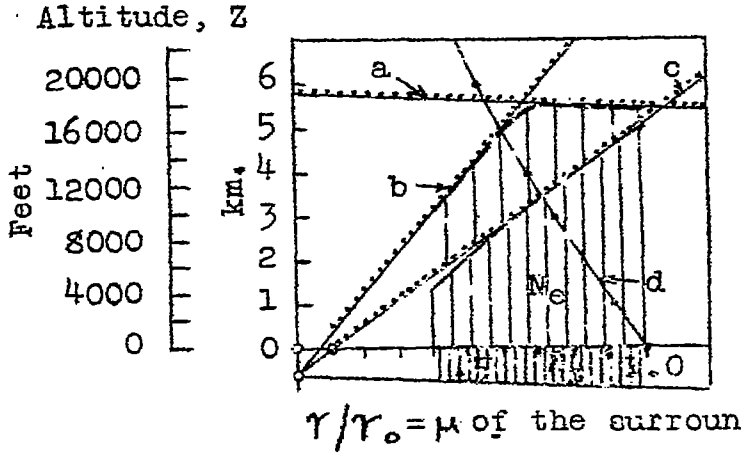

a=Limit of mechanical strength
b=Charging limitsfor high-altitude engi
c=Charging limit for ordinary engines
d=Altitude curve

Fig. 3

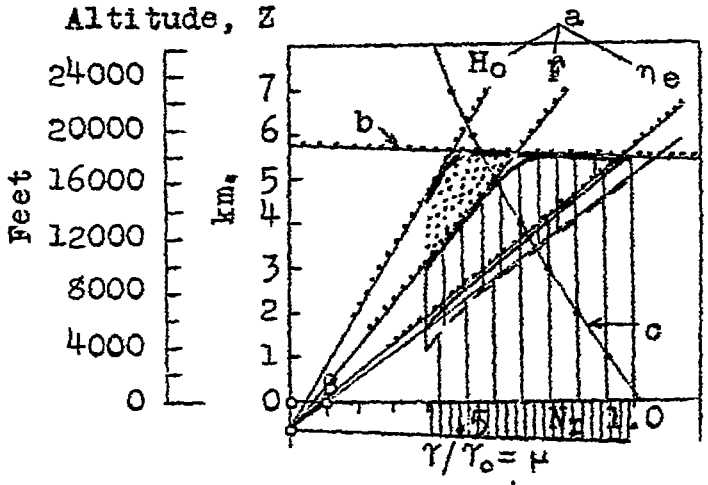

a=Effect of increase of limit of mechanical strength
b=Limit of mechanical strength
c=Altitude curve

Fig. 4

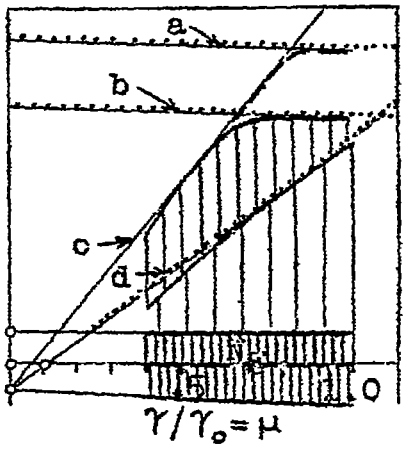

a=Temparary limit of mechanical strength
b=Permanent limit of mechanical strength
c=With compressor
d=Without compressor

Fig. 5

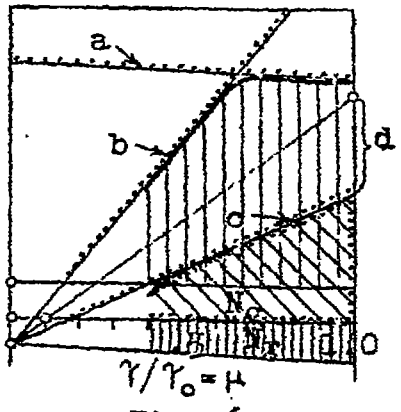

a=Limit of mechanical strength
b=With compressor
c=Without compressor
d=Effect of piston reduction

Fig. 6

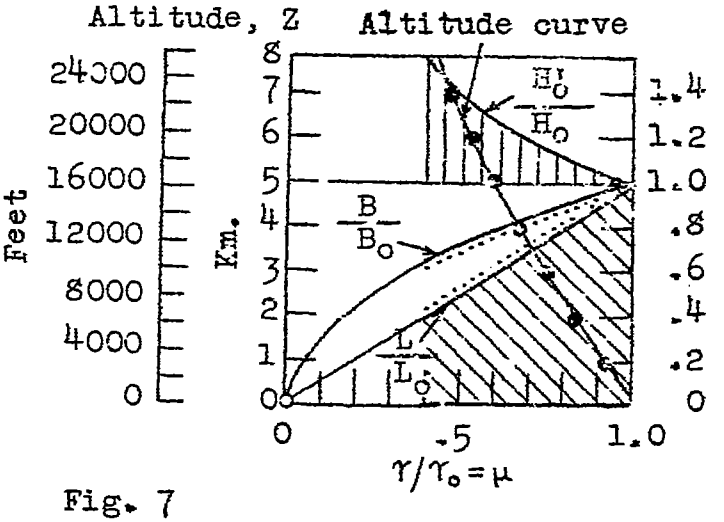

Fig. 7

Fig. 7

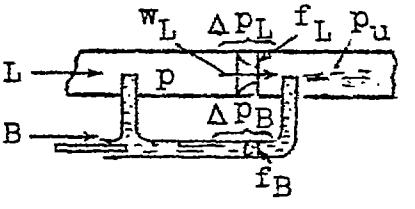

Fig. 8

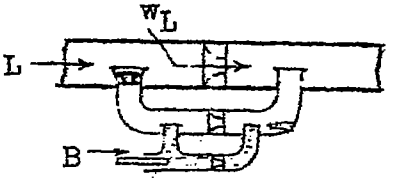

Fig. 9

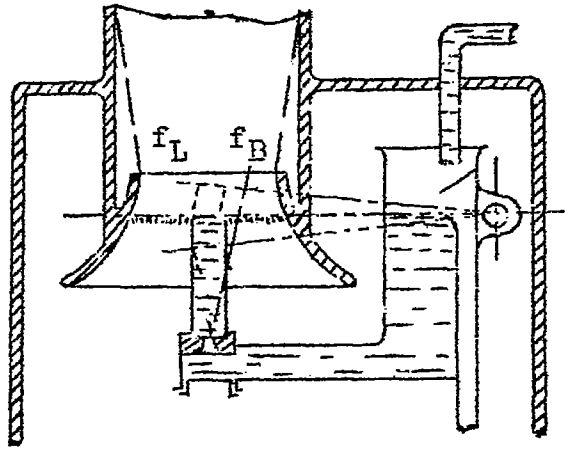

Fig. 10

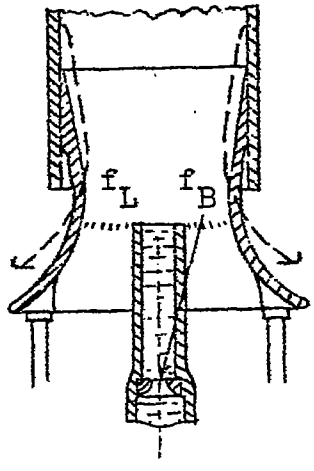

Fig. 11

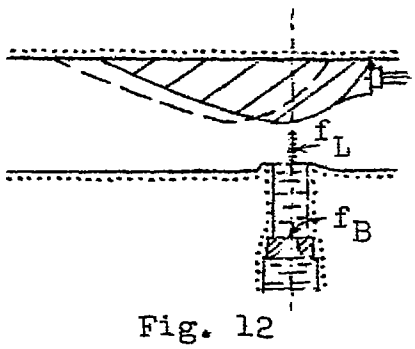

Fig. 12

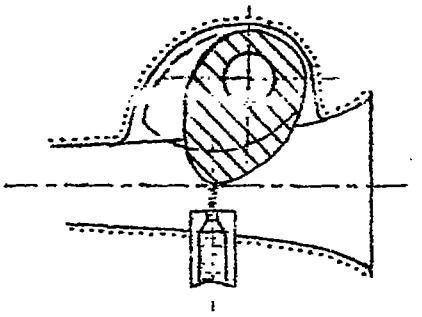

Fig. 13

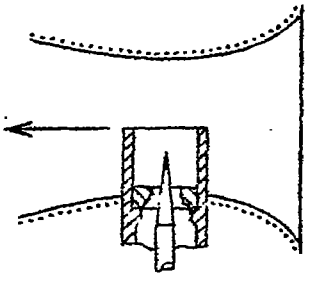

Fig. 14

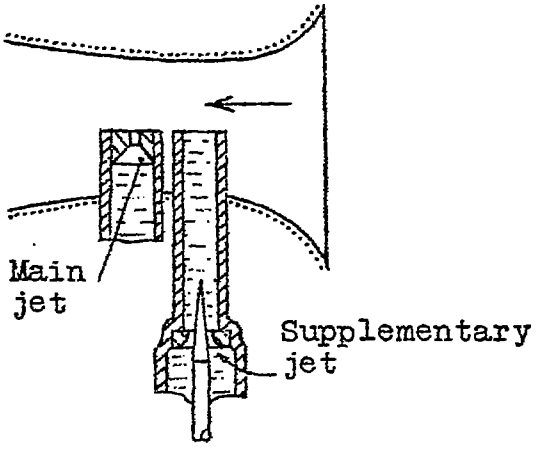

Fig. 15

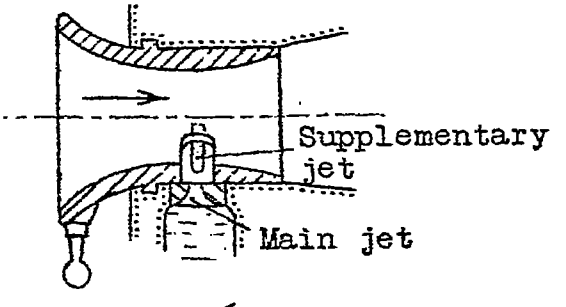

Fig.16

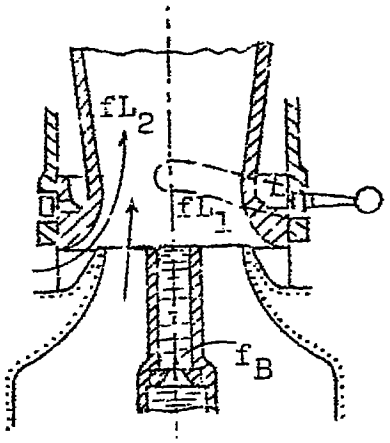

Fig. 17

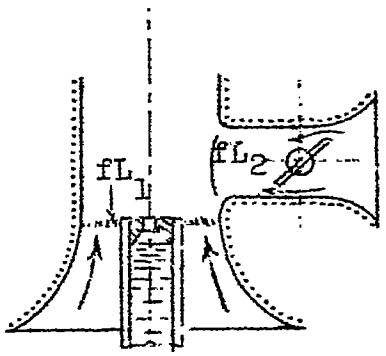

Fig. 18

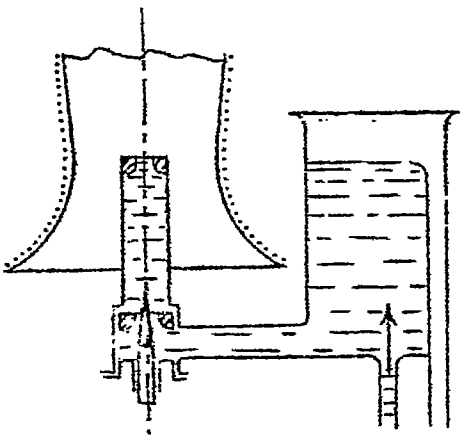

Fig. 19

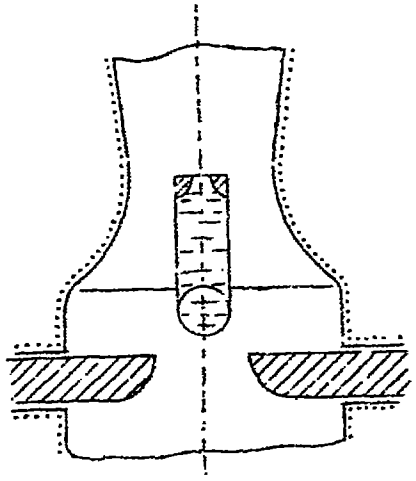

Fig. 20

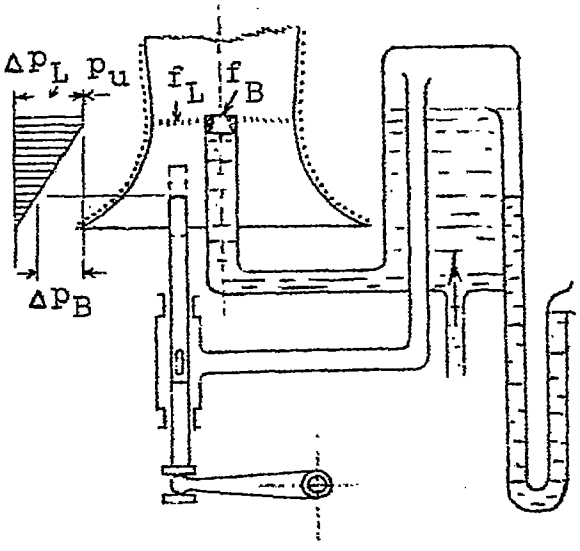

Fig. 21

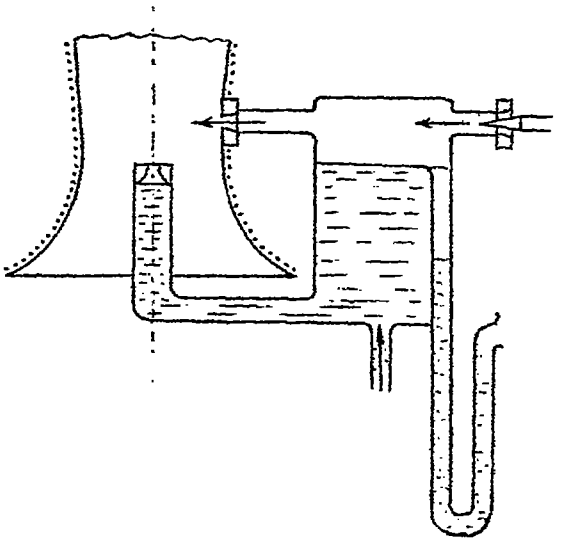

Fig. 22

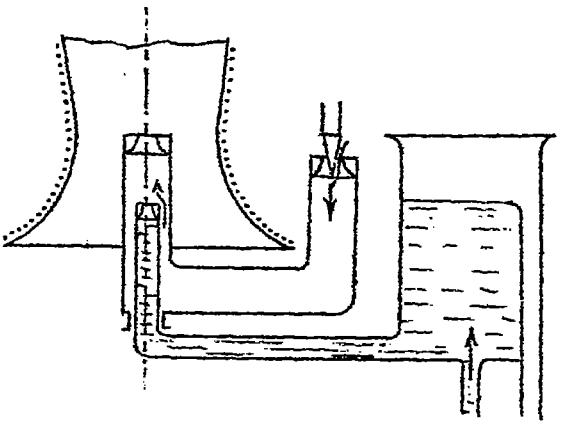

Fig. 23

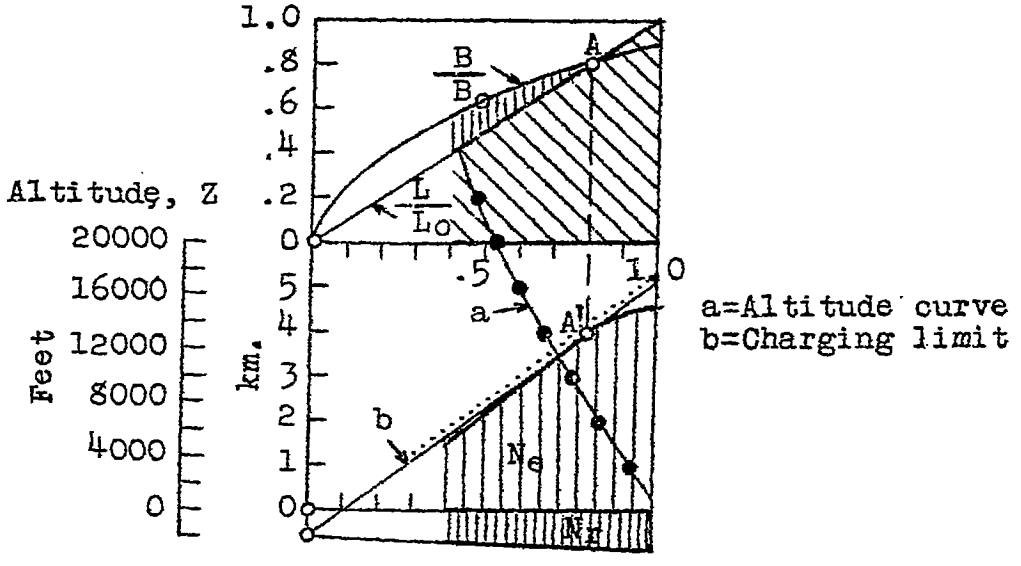
1.0
.8
.6
.4
.2
0
B/Bo
A
L/Lo
.5
1.0
Altitude, Z
20000
16000
12000
8000
4000
0
Feet
5
4
3
2
1
0
km.
a
A'
b
Ne
NH
a=Altitude curve
b=Charging limit

Fig. 24

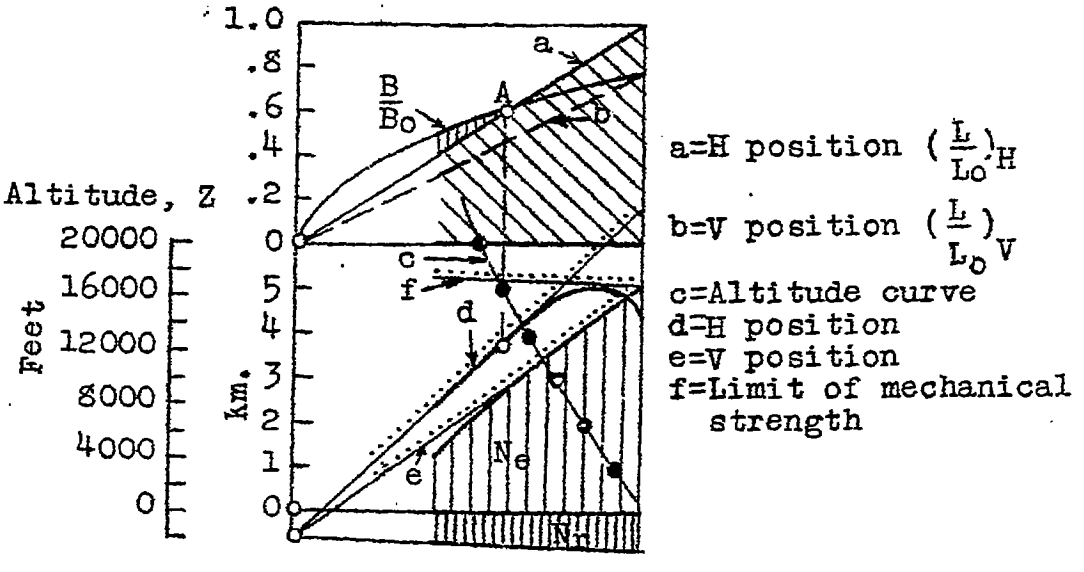
1.0
.8
.6
.4
.2
0
B/Bo
A
a
b
Altitude, Z
20000
16000
12000
8000
4000
0
Feet
c
f
d
e
5
4
3
2
1
0
km.
Ne
NH
a=H position (L/Lo)H
b=V position (L/Lo)V
c=Altitude curve
d=H position
e=V position
f=Limit of mechanical strength

Fig. 25

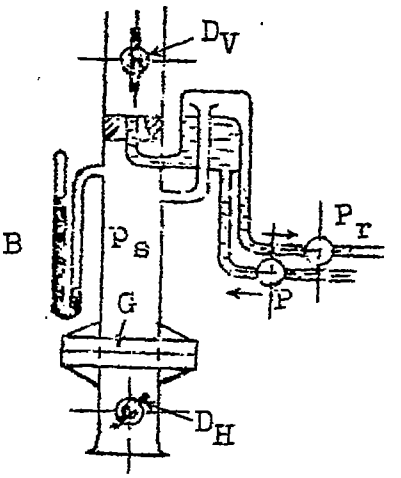

Fig. 26

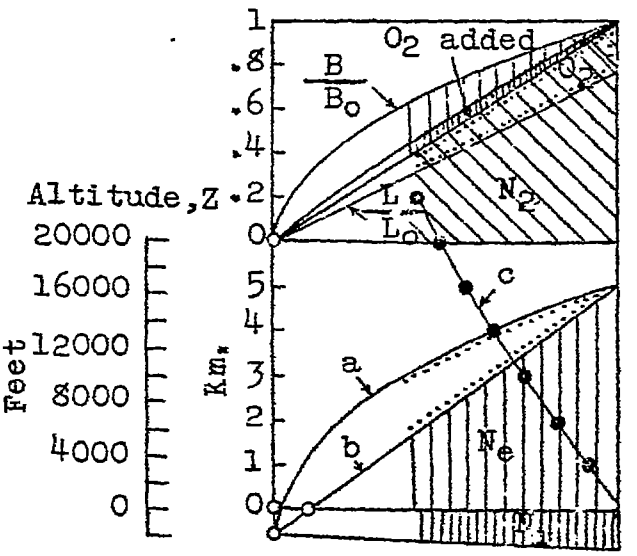

a=With additional oxygen
b=Without additional oxygen
c=Altitude curve

Fig. 27

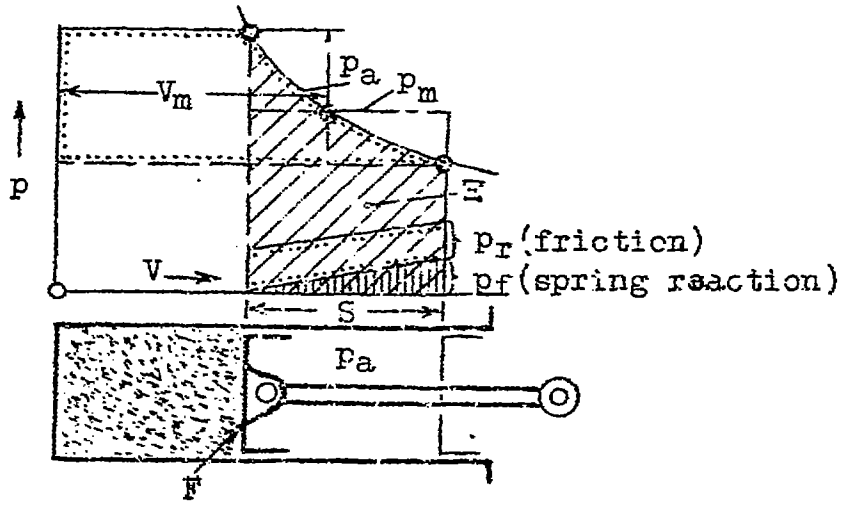

Fig. 28

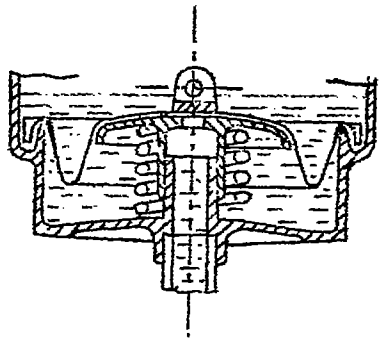

Fig. 29

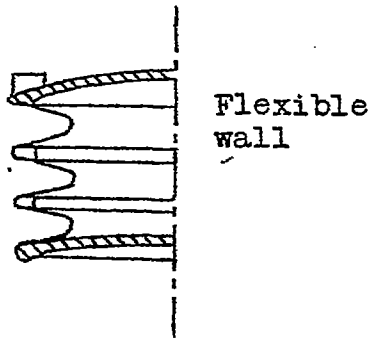

Fig. 30

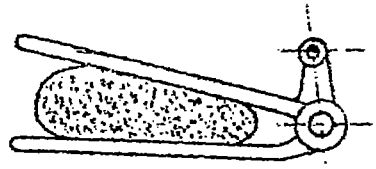

Fig. 31

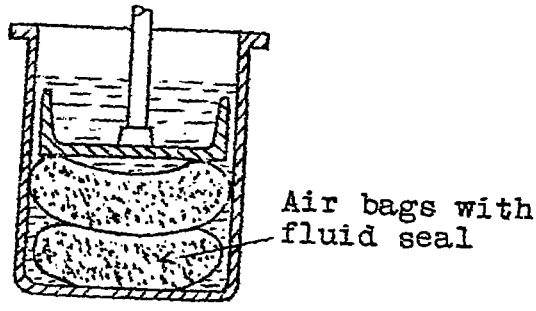

Fig. 32

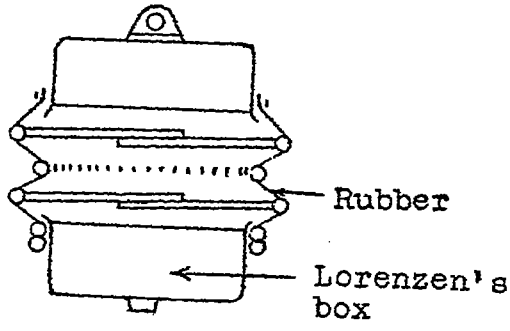

Fig. 33

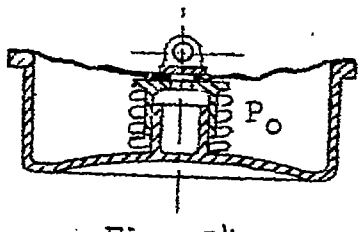

Fig. 34

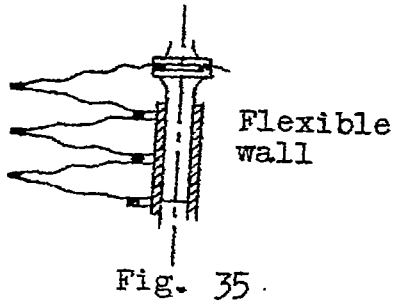

Fig. 35

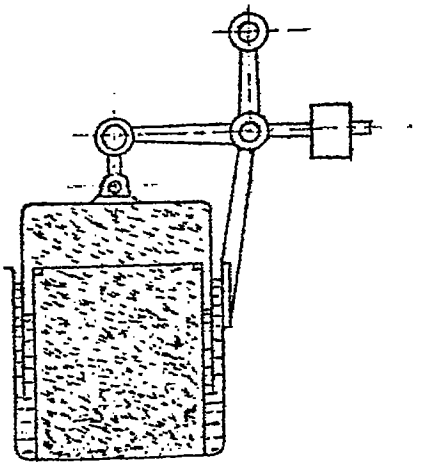

Fig. 36

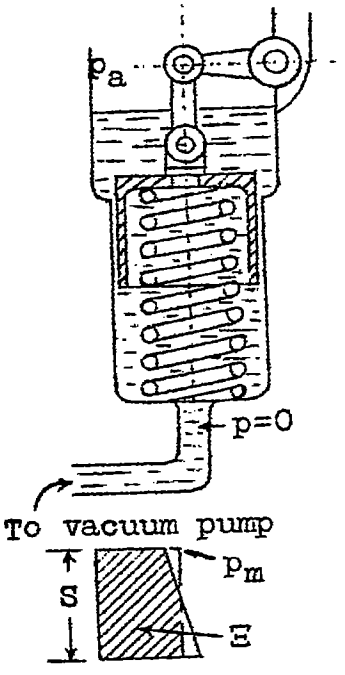

Fig. 37

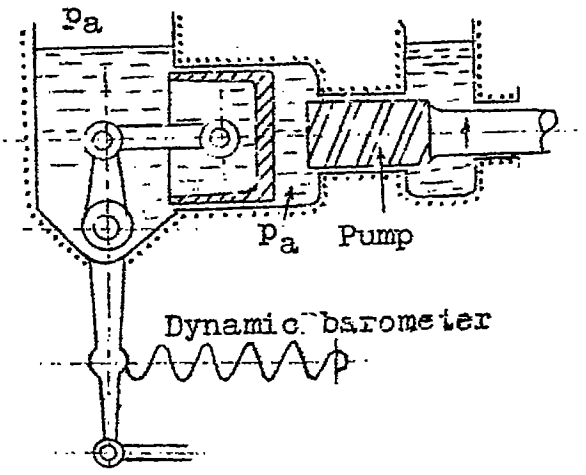

Fig. 38

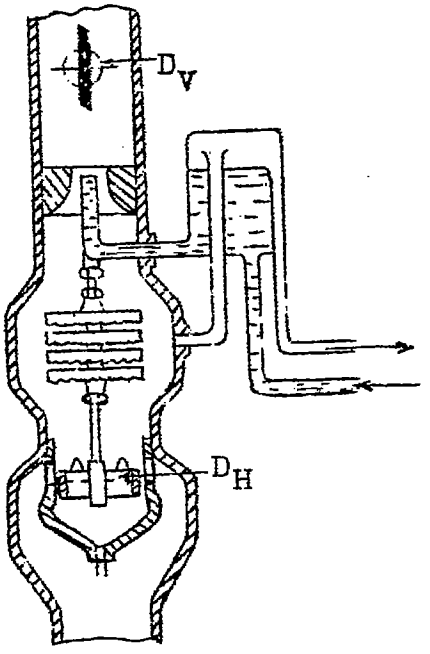

Fig. 39

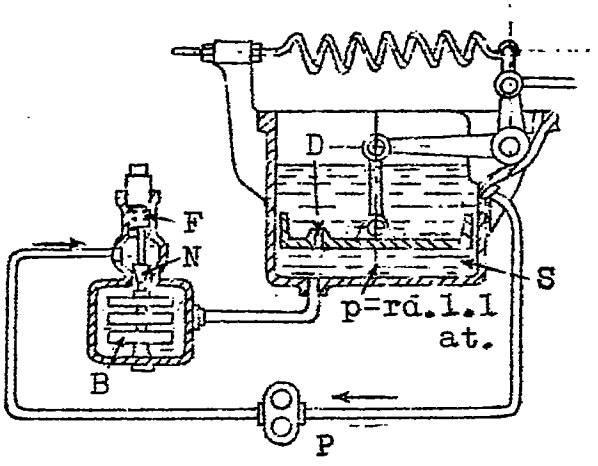

Fig. 40

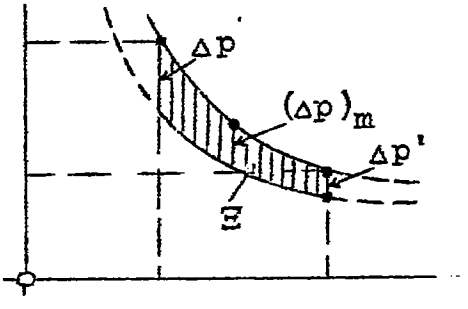

Fig. 41

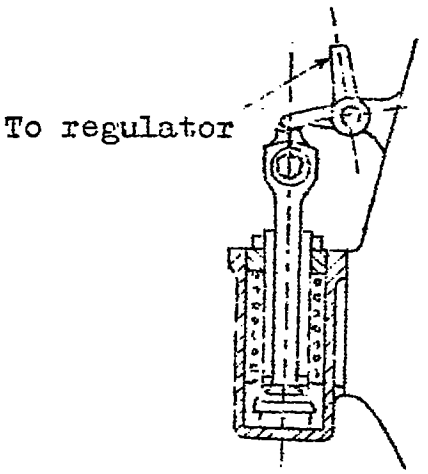

Fig.42

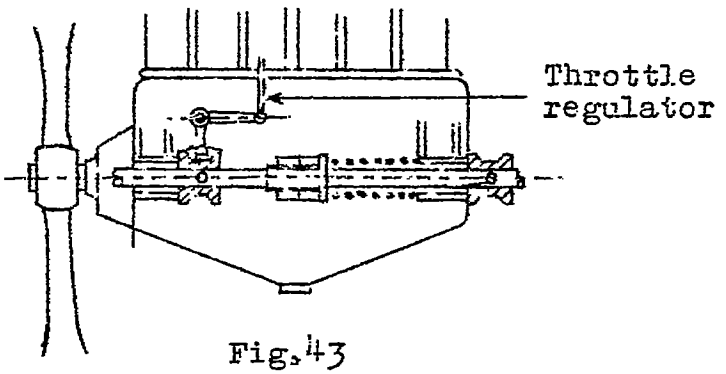

Fig.43