IONAL ADVISORY COMMITTEE
FOR AERONAUTICS

JUN 4 1923
MAILED

M. Luscatt

TECHNICAL NOTES

NATIONAL ADVISORY COMMITTEE FOR AERONAUTICS.

No. 143

CALCULATIONS FOR A SINGLE-STRUT BIPLANE WITH REFERENCE TO THE TENSIONS IN THE WING BRACING.

By O. Blumenthal.

From Technische Berichte, Volume III, No. 5.

June, 1923.

NATIONAL ADVISORY COMMITTEE FOR AERONAUTICE.

TECHNICAL NOTE NO. 143.

CALCULATIONS FOR A SINGLE STRUT BIPLANE WITH REFERENCE TO THE TENSIONS IN THE WING BRACING.*

By O. Blumenthal.

Since the influence of the initial tensions in the wing bracing on the stressing of airplane parts does not yet appear to have been sufficiently elucidated, an example will be worked out below for a heavily staggered biplane with a single rigid outer strut. The general construction and dimensions of the airplane are shown in Fig. 1. In the lift wires f_v and f_h, and the antilift wires g_v and g_h, let us assume the same initial tension V. Let the tensions in the right and left wings be equal, so that the load is symmetrical with respect to the center. If f is the length of a lift wire, g that of an antilift wire, A_f and A_g the cross-section, K the tension in the lift wire and G that in the antilift wire for a given load, then the changes in length of the wires with a given load are:

$$\Delta f = \frac{f}{EA_f}(K - V) \quad \text{and} \quad \Delta g = \frac{g}{EA_g}(G - V) \qquad (1)$$

the initial tensions in the internal bracing of the wings being neglected. The loading cases A (horizontal flight) and B (gliding flight) of the testing and acceptance regulations of the

* From Technische Berichte, Volume III, No. 5, pp. 152-160. (1918).

Royal Airplane Directorate (Flugzeugmeisterei) are calculated. If the wires are initially only slightly stressed, or not at all, then in both cases, the lift wires are taut and the antilift wires slack (low initial tension). If, then, the initial tension is greater under load, one of the two weight cables remains taut, while the other is slack (medium initial tension). For still greater initial tension, both anitlift wires remain taut (high initial tension). The calculation differs for the three degrees of initial tension. In the first place, the general form of the calculation will be given in a convenient form and then cases A and B will be treated in order. (This procedure differs a little from the usual method. It was adopted for the sake of clearness from the physical point of view.)

1. Calculation.

The airplane is referred to a rectangular system of coordinates with the origin lying in the plane of symmetry of the airplane. The x-axis runs from front to rear; the y-axis from bottom to top; and the z-axis in the direction of the spars. The strut has the coordinate z, z_2 and the points where it meets the spars have the coordinates:

x_1 y_1 (Top of front spar)
x_2 y_2 (" " rear ")
x_3 y_3 (Bottom of front ")
x_4 y_4 (" " rear ")

For slightly cambered wing sections, we can put $y_1 = y_2$, $y_3 = y_4$. The strut may be considered rigid. The constancy of the lengths of the four sides and a diagonal may be expressed as follows:

$$\Delta x_1 = \Delta x_2 \tag{2}$$

$$\Delta x_3 = \Delta x_4 \tag{3}$$

$$(x_3 - x_1)(\Delta x_3 - \Delta x_1) + (y_3 - y_1)(\Delta y_3 - \Delta y_1) = 0 \tag{4}$$

$$(x_4 - x_2)(\Delta x_4 - \Delta x_2) + (y_4 - y_2)(\Delta y_4 - \Delta y_2) = 0 \tag{5}$$

$$(x_4 - x_1)(\Delta x_4 - \Delta x_1) + (y_4 - y_1)(\Delta y_4 - \Delta y_1) = 0 \tag{6}$$

From equations (5) and (6), since $\Delta x_1 = \Delta x_2$ and $y_1 = y_2$, there follows the relation which for brevity will be referred to as the "rigidity condition,"

$$(x_2 - x_1)(\Delta x_4 - \Delta x_1) + (y_4 - y_1)(\Delta y_2 - \Delta y_1) = 0 \tag{7}$$

In this equation the displacements must be expressed in terms of the forces. For this purpose, in the first place, the horizontal force Q_o and Q_u are used, which are exerted on both the upper and the lower wing by the combined action of the wire and strut. These forces are applied at the coordinate z_2 and act in the direction of the positive x-axis (Fig. 1).

The upper wing is held in position by the short struts (coordinate z_0) and the lower wing by the attachment to the fuselage (coordinate z_1) (Fig. 1). On substituting for the internal bracing forces of both wings (Figs. 3 and 4) the force and deformation diagrams, in case A we have the equations:

$$\Delta x_1 = aQ_o \quad (8A) \quad \text{and} \quad \Delta x_4 = c\,Q_u \qquad (9A)$$

in case B, where the air reactions have a horizontal component,

$$\Delta x_1 = aQ_o + b \quad (8B) \quad \text{and} \quad \Delta x_4 = cQ_u + d \qquad (9B)$$

with the same values of a and c as in case A.

The displacements Δy_1, Δy_2 are calculated from the change in length of the lift wires. The immovable fastenings of this wire on the lower wing spars are at a distance z_1 from the median plane of the airplane. Hence

$$f_v^2 = (x_1 - x_3)^2 + (y_1 - y_3)^2 + (z_2 - z_1)^2$$
$$f_h^2 = (x_2 - x_4)^2 + (y_2 - y_4)^2 + (z_2 - z_1)^2$$

If, for the sake of simplification, the change in length of the spar is neglected and $\Delta z_2 = 0$, it follows from differentiation, that

$$f_v\,\Delta f_v = (x_1 - x_3)\,\Delta x_1 + (y_1 - y_3)\,\Delta y_1 \qquad (10a)$$

$$f_h\,\Delta f_h = (x_2 - x_4)\,\Delta x_2 + (y_2 - y_4)\,\Delta y_2, \qquad (11a)$$

hence

$$\Delta y_1 = \frac{f_v}{y_1 - y_3}\,\Delta f_v - \frac{x_1 - x_3}{y_1 - y_3}\,\Delta x_1 \qquad (8)$$

$$\Delta y_2 = \frac{f_h}{y_2 - y_4}\,\Delta f_h - \frac{x_2 - x_4}{y_2 - y_4}\,\Delta x_2 \qquad (9)$$

By substituting in this the values obtained in equation (1) for Δf_v and Δf_h and putting Δx_2 for Δx_1 by equation (2), we finally obtain

$$\Delta y_1 = \frac{f_v^2}{E\,A_f\,(y_1 - y_3)}\,(K_v - V) - \frac{x_1 - x_3}{y_1 - y_3}\,\Delta x_1 \qquad (10)$$

$$\Delta y_2 = \frac{f_h^2}{E\,A_f\,(y_2 - y_4)}\,(K_h - V) - \frac{x_2 - x_4}{y_2 - y_4}\,\Delta x_1\,, \qquad (11)$$

in which Δx_1 is still to be expressed by its value in equation (8).

The values 8, 9, 10, 11, substituted in equation (7) give a linear relation between K_v, K_h, Q_o, Q_u and V, which will be denoted by equation (1).

Three further relations between the forces result from the equilibrium conditions of the strut. They indicate that the mean or resultant force of all the forces (equations (12) and (13)) acting on the strut and the moment about the point x_1 y_1 must vanish (equation (14)). Six forces are involved: two horizontal forces $-X_o$ and $-X_u$ (in the direction of the positive x-axis), in the upper and lower wings, and four vertical forces $-Y_1$, $-Y_2$, $-Y_3$, and $-Y_4$ (in the direction of the positive y-axis) which act on the corresponding nodes of the spar. The conditions of equilibrium are as follows (Fig. 2):

$$X_o + X_u = 0 \qquad (12)$$

$$Y_1 + Y_2 + Y_3 + Y_4 = 0 \qquad (13)$$

$$Y_2\,(x_2 - x_1) + Y_3\,(x_3 - x_1) + Y_4\,(x_4 - x_1) - -X_u\,(y_3 - y_1) = 0. \qquad (14)$$

The newly introduced forces are to be related to the wire tensions and horizontal thrusts. To the case of the forces Y_1, Y_2, this is done by a consideration of the elastic equilibrium of the upper spar (Fig. 5). The upper spar is a girder on

four supports, the two short center section struts at $\pm z_0$ and the two longer vertical struts at $\pm z_2$. On account of the symmetry of the two halves of the spar, only one half need be considered. In the center, the flexure of the spar has a horizontal tangent, the point at z_0 is fixed, so that

$$\frac{dy}{dz}(0) = y'(0) = 0, \quad y(z_0) = 0. \tag{15}$$

For elastic equilibrium in a vertical direction, the vertical components of the air reactions come into question as bending forces, besides the forces P' and P, at the points z_0 and z_2 which together maintain equilibrium with the vertical components of the air reactions, the longitudinal stresses in the spars being neglected. In order to justify this omission, a second approximation can be made after the whole calculation is finished, by applying the calculated longitudinal tension along the line of flexure. The forces obtained by the first and second approximation differ but little. (Here the second approximation has been omitted.) It is a case of determining the flexure of a bar under the influence of a transverse load, in fact, of a uniform load (the air reactions), and two individual loads (P' and P) under the initial conditions (equation (15)). This simple calculation will not be carried out here. The result is a linear relation between the thrust P and the displacement Δy of the strut end of the spar. If P is considered positive in the positive direction of y, the equations

for the two spars take the following form:

$$P_v = \alpha_v + \beta_v \ \Delta y_1 \quad (16) \qquad P_h = \alpha_h + \beta_h \ \Delta y_2 . \quad (17)$$

The values of α and β are calculated from the air reactions and the moment of inertia and cross-section of the spar.

The forces P bear a simple relation to the strut reactions Y_1, Y_2, and the vertical components $K_v{}^y$, $K_h{}^y$ of the cable tensions. Actually the forces P, K^y and Y act at right angles to the central section of the upper spar. Hence

$$Y_1 = P_v - K_v{}^y = P_v - \frac{y_3 - y_1}{f_v} K_v$$

$$Y_2 = P_h - K_h{}^y = P_h - \frac{y_3 - y_1}{f_h} K_h,$$

and from (16) and (17)

$$Y_1 = \alpha_v - \frac{y_3 - y_1}{f_v} K_v + \beta_v \ \Delta y_1 \quad (18)$$

$$Y_2 = \alpha_h - \frac{y_3 - y_1}{f_h} K_h + \beta_h \ \Delta y_2 \quad (19)$$

In these equations we have only to substitute expressions (10) and (11) for Δy_1, Δy_2 and Y_1, Y_2 are then expressed in terms of K_v, K_h and Q_o. It appears, moreover, in the numerical calculations that the terms $\beta_v \ \Delta y_1$ and $\beta_h \ \Delta y_2$ are very small in comparison with the others and may be neglected in the first approximation. Y_1 and Y_2 are therefore only slightly dependent on the initial tension.

Further, there is also a relation between the horizontal force Q_o, the components x, $K_v{}^x$ and $K_h{}^x$ of the wire ten-

sions and the force X_o. The equilibrium of the horizontal forces at the strut ends of the upper wing gives the following

$$Q_o = X_o + K_v{}^x + K_h{}^x = X_o + \frac{x_3 - x_1}{f_v} K_v + \frac{x_4 - x_2}{f_h} K_h$$

and from equation (12)

$$Q_o = - X_u + \frac{x_3 - x_1}{f_v} K_v + \frac{x_4 - x_2}{f_h} K_h \qquad (20)$$

It is always supposed that this value Q_o is brought into equations (10) and (11), also (18) and (19).

While the initial tension plays a subordinate role in the above discussion, it becomes very essential when the relation is sought between the strut forces Y_3, Y_4 and X_u on the lower wing and the wire tensions. The formulas are quite different, according to whether an antilift wire is slack (tension G negative) or taut (tension G positive). From the start, four cases are to be distinguished:

S = Low initial tension:

$$G_v < 0, \; G_h < 0.$$

M_v = Medium initial tension with taut front cable:

$$G_v > 0 \quad G_h > 0.$$

M_h = Medium initial tension with taut rear cable:

$$G_v < 0 \quad G_h < 0.$$

T = High initial tension:

$$G_v > 0 \quad G_h > 0.$$

The symbols S, M_v, M_h, T are affixed with this meaning as indicators to the formula numbers.

For the calculation of Y_3 and Y_4 it is assumed that the lower spar is connected by a hinge joint with the fuselage at z_1, the attachment of the left cable. The vertical components of the air reactions acting on the lower spar, are held in equilibrium by a vertical force R' at the point z_1 and a vertical force R at the end of the strut z_2, both forces being reckoned positive in the positive direction of y. If the weight cable acting on the lower spar is slack, $Y = R$. If, however, it is taut, besides Y and R, the vertical component of the cable tension acts in a vertical direction on the center section of the lower spar. Hence we have

$$Y = R - G^y = R - \frac{y_1 - y_3}{g} G$$

In the four cases of initial tension, we thus obtain the following equations:

$$Y_3 = R_v \qquad (21\ S)$$

$$Y_3 = R_v - \frac{y_1 - y_3}{g} G_v \qquad (21\ M_v)$$

$$Y_3 = R_v \qquad (21\ M_h)$$

$$Y_3 = R_v - \frac{y_1 - y_3}{g_v} G_v \qquad (21\ T)$$

$$Y_4 = R_h \qquad (22\ S)$$

$$Y_4 = R_h \qquad (22\ M_v)$$

$$Y_4 = R_h - \frac{y_2 - y_4}{g_h} G_h \qquad (22\ M_h)$$

$$Y_4 = R_h \quad \frac{y_2 - y_4}{g_h} G_h \qquad (22\ T)$$

The equilibrium of the horizontal forces on the strut end of the lower wing gives the following relation between Q_u and X_u

and the horizontal force components

$$G_v = \frac{x_1 - x_3}{g_v} G_v \quad \text{and} \quad G_h{}^x = \frac{x_2 - x_4}{g_h} G_h$$

of the antilift wire tensions.

$$Q_u = X_u \tag{23 S}$$

$$Q_u = X_u + \frac{x_1 - x_3}{g_v} G_v \tag{23 M_v}$$

$$Q_u = X_u + \frac{x_2 - x_4}{g_h} G_h \tag{23 M_h}$$

$$Q_u = X_u + \frac{x_1 - x_3}{g_v} G_v + \frac{x_2 - x_4}{g_h} G_h \tag{23 T}$$

If, in equations (13) and (14) the values of Y in equations (18), (19), (21) and (22) are substituted, we obtain two equations between K_v, K_h, G_v, G_h, X_u, which will be designated by (II) and (III). Equation (I), in which Q_o and Q_u are expressed in terms of equations (20) and (23), give, with equations (II) and (III) three linear equations for the five unknowns K_v, K_h, G_v, G_h, and X_u. The two equations still lacking, are relations between K and G, which are obtained by purely geometrical processes. The antilift wires are fastened to the upper spars at the points of attachment of the short struts. This end of the antilift wire is thus rendered immovable. Now let, for example, the front antilift wire be stressed, so that $G_v > 0$.

From the relation $g_v{}^2 = (x_3 - x_1)^2 + (y_3 - y_1)^2 + (z_2 - z_0)^2$ it follows, on account of the fixity of the point x_1 y_1 z_0, that

$g_V \Delta g_V = (x_3 - x_1)\ \Delta x_3 + (y_3 - y_1)\ \Delta y_3 + (z_2 - z_0)\ \Delta z_2$, and if the extension of the spar Δz_2, is neglected,

$$g_V\ \Delta g_V = (x_3 - x_1)\ \Delta x_3 + (y_3 - y_1)\ \Delta y_3.$$

Subtracting the rigidity equation (4)

$$0 = (x_3 - x_1)\ (\Delta x_3 - \Delta x_1) + (y_3 - y_1)\ (\Delta y_3 - \Delta y_1)$$

which, from equation (10a), gives

$$g_V\ \Delta g_V = (x_3 - x_1)\ \Delta x_1 + (y_3 - y_1)\ \Delta y_1 = -\ f_V\ \Delta f_V.$$

By substituting the values in equation (1) for Δg and Δf, we obtain

$$\frac{f_V^2}{A_f} K_V + \frac{g_V^2}{A_g} G_V = \left(\frac{f_V^2}{A_f} + \frac{g_V^2}{A_g}\right) V,$$

or,

$$G_V = -\ \gamma_V\ K_V + (1 + \gamma_V)\ V,\ \gamma_V = \frac{f_V^2}{g_V^2}\ \frac{A_g}{A_f} \tag{24}$$

and correspondingly, when the rear weight cable is taut,

$$G_h = -\ \gamma_h\ K_h + (1 + \gamma_h)\ V,\ \gamma_h = \frac{f_h^2}{g_h^2}\ \frac{A_g}{A_f} \tag{25}$$

These values are to be put in equations (21), (22) and (23), as well as in equations (I), (II) and (III).

The four cases of initial tension are characterized by the following inequalities:

$$\begin{array}{lll}
S: & -\gamma_V\ K_V + (1 + \gamma_V)\ V < 0 & -\gamma_h\ K_h \quad (1 + \gamma_h)\ V < 0, \\
M_V: & -\gamma_V\ K_V + (1 + \gamma_V)\ V > 0 & -\gamma_h\ K_h \quad (1 + \gamma_h)\ V < 0, \\
M_h: & -\gamma_V\ K_V + (1 + \gamma_V)\ V < 0 & -\gamma_h\ K_h \quad (1 + \gamma_h)\ V > 0, \\
T: & -\gamma_V\ K_V + (1 + \gamma_V)\ V > 0 & -\gamma_h\ K_h \quad (1 + \gamma_h)\ V > 0.
\end{array}$$

II. Numerical Calculation.

The dimensions of the airplane are to be taken from Fig. 1. Let the full load be 740 kg (1631.4 lb), the weight of the wings 100 kg (220 lb), the moment of inertia of the front upper spar $I_v = 78.9\ cm^4$ and that of the rear upper spar $I_h = 62.5\ cm^4$, the cross-section of the lift wires $A_f = 0.127\ cm^2$ ($.0197\ in^2$) and of the antilift wire $A_g = 0.0880\ cm^2$ ($.0136\ in^2$)

Then $$Q_o = - X_u + 0.248\ K_v + 0.132\ K_h \qquad (20)$$

$$\gamma_v = 0.777 \quad (24) \qquad \gamma_h = 0.782. \qquad (25)$$

The assumption that the loads on the upper wing and the lower wing are in the ratio of 11 : 9 underlies the calculation of the air reactions; and, further, that the center section of the upper wing between the short cabane struts only carries half its normal load and that, in both wings, the end portions, at the wing tips, only carry three-fourths. From the air forces thus calculated, the uniformly distributed weight of the wings is deducted. In the subsequent summation of the forces acting on the spars, the vertical forces are measured positively in the positive direction of y, and the horizontal forces occurring in case B are measured positively in the positive direction of x.

Case A.

Forces	Between short cabane struts		Middle section of wing between struts		Wing tips beyond struts	
	kg/cm	lb/ft	kg/cm	lb/ft	kg/cm	lb/ft.
UPPER SPARS						
Front spar vertical	.158	.0114	.361	.0261	.259	.0187
Rear spar vertical	.115	.0083	.263	.0190	.189	.0137
LOWER SPARS						
Front spar vertical	--	--	.160	.0116	.113	.0082
Rear spar vertical	--	--	.180	.0130	.128	.0093

Case B

Forces	Between short cabane struts		Middle section of wing between struts		Wing tips beyond struts	
	kg/cm	lb/ft	kg/cm	lb/ft	kg/cm	lb/ft
UPPER SPARS						
Front spar vertical	-.0108	-.0008	-.0247	-.0018	-.0177	-.0013
Rear spar vertical	.2700	.0195	.6170	.0446	.4430	.0320
Horizontal	.0864	.0062	.1970	.0143	.1420	.0103
LOWER SPARS						
Front spar vertical	--	--	-.0934	-.0068	-.0660	-.0048
Rear spar vertical	--	--	.4160	.0301	.2950	.0213
Horizontal	--	--	.1075	.0078	.0763	.0055

The diagonals of the internal bracing consist of two tension wires of 2 mm (.079 in) diameter. The elasticity modulus of the wood is

1.6×10^5, that of the tension wires 1.3×10^6.* With the aid of these data, the numbers introduced in Section I may be calculated. The calculation will be omitted.

III. Treatment of Case A.

In this case we have:

$$\Delta x_1 = 10^{-3} \; 10.7 \; Q_o \qquad (8)$$

$$\Delta x_4 = 10^{-3} \; 15.5 \; Q_u \; ** \qquad (9)$$

Hence, in conjunction with equation (20)

$$\Delta y_1 = 10^{-3} [3.88 \; (K_v - V) + 5.84 \; Q_o] \qquad (10)$$

$$= 10^{-3} \; (5.33 \; K_v + 0.77 \; K_h - 5.84 \; X_u - 3.88 \; V).$$

$$\Delta y_2 = 10^{-3} [3.71 \; (K_h - V) + 3.02 \; Q_o] \qquad (11)$$

$$= 10^{-3} \; 0.75 \; K_v + 4.11 \; K_h - 3.02 \; X_u - 3.71 \; V).$$

Further,

$$P_v = - 75.6 + 1.68 \; \Delta y_1 \qquad (16)$$

$$P_h = - 55.0 + 1.33 \; \Delta y_2 \qquad (17)$$

and hence, from equations (10) and (11)

$$Y_1 = 0.461 \; K_v + 0.0013 \; K_h - 0.0098 \; X_u - \\ -75.6 - 0.0065 \; V \qquad (18)$$

$$Y_2 = 0.0010 \; K_v + 0.471 \; K_h - 0.0040 \; X_u - \\ -55.0 - 0.0049 \; V. \qquad (19)$$

Lastly, $R_v = - 34.4$, $R_h = - 38.9$

Equations (I), (II) and (III) assume different forms according to the initial tension.

* This small modulus of elasticity for the tension wires is due to the yielding of the eye connections and is confirmed by experiment.

** Here, in comparison with the alteration in length of the diagonal bracing, that of the spars and struts is negligible.

S. Low Initial Tension.

Since, from the preceding,

$$Y_3 = -34.4 \tag{21}$$

$$Y_4 = -38.9 \tag{22}$$

$$Q_u = X_u \tag{23}$$

we obtain the following equations for the forces K_v, K_h, X_u:

$$399\ K_v - 556\ K_h + 1690\ X_u - 22.6\ V = 0 \tag{I}$$

$$0.463\ K_v + 0.471\ K_h - 0.0138\ X_u - 203.9 - 0.0114\ V = 0 \tag{II}$$

$$0.0790\ K_v + 37.2\ K_h + 133\ X_u - 11380 - 0.387\ V = 0. \tag{III}$$

Equations (II) and (III) are first solved for K_v and K_h:

$$K_v = 128 + 3.66\ X_u + 0.0139\ V \tag{IV}$$

$$K_h = 307 - 3.59\ X_u + 0.0105\ V \tag{V}$$

These values are substituted in (I) and we obtain

$$X_u = 23.1 + 0.00445\ V = Q_u \tag{VI}$$

whence from (IV), (V) and (20)

$$K_v = 213 + 0.0302\ V \tag{VII}$$

$$K_h = 224 - 0.0055\ V \tag{VIII}$$

$$Q_o = 59.2 + 0.00232\ V \tag{IX}$$

The values for γ_v and γ_h given above (equations (24) and (25)) show that low initial tension exists for all values V which satisfy the inequalities

$$-0.777\ K_V + 1.78\ V = -165 + 1.76\ V < 0$$

$$-0.782\ K_h + 1.78\ V = -175 + 1.78\ V < 0.$$

Both inequalities are satisfied for $V = 0$. For $V = 93.8$, the left-hand side of the first inequality passes from negative to positive values, while the second inequality holds good up to $V = 98.4$. The range of low initial tension is $V < 93.8$. After this there ensues an obviously small range of medium initial tension with taut front antilift wires and slack rear antilift wires. Within the range of low initial tensions the forces change extremely little.

Medium Initial Tension, M_V.

The calculation will be gone through briefly although the case is without practical importance on account of the small range of the initial tension.

$$Y_3 = R_V - \frac{y_1 - y_3}{g_V} G_V = R_V + \frac{y_1 - y_3}{g_V} \gamma_V K_V - \tag{21}$$

$$- \frac{y_1 - y_3}{g_V} (1 + \gamma) V = 0.376\ K_V - 34.4 - 0.860\ V$$

$$Y_4 = -38.0 \tag{22}$$

$$Q_u = X_u + \frac{x_1 - x_3}{g_V} G_V = X_u + \frac{x_3 - x_1}{g_V} \gamma_V K_V - \tag{23}$$

$$- \frac{x_3 - x_1}{g_V} (1 + \gamma_V) V = 0.205\ K_V + X_u - 0.470\ V.$$

$$650\ K_v - 556\ K_h + 1690\ X_u - 599\ V = 0, \qquad \text{(I)}$$

$$0.838\ K_v + 0.471\ K_h - 0.0158\ X_u - 203.9 - 0.871\ V = 0, \qquad \text{(II)}$$

$$27.3\ K_v + 37.2\ K_h + 133\ X_u - 11380 - 62.7\ V = 0. \qquad \text{(III)}$$

From equations (II) and (III):

$$K_v = 3.45\ X_u + 121 + 0.155\ V, \qquad \text{(IV)}$$

$$K_h = -6.10\ X_u + 217 + 1.56\ V, \qquad \text{(V)}$$

and from equation (I):

$$X_u = 5.76 + 0.187\ V. \qquad \text{(VI)}$$

Then follow in order:

$$K_v = 141 + 0.798\ V \qquad \text{(VII)}$$

$$K_h = 182 + 0.42\ V \qquad \text{(VIII)}$$

$$Q_o = 53.2 + 0.066\ V \qquad \text{(IX)}$$

$$G_v = -109 + 1.16\ V \qquad \text{(X)}$$

$$Q_u = 34.7 - 0.118\ V. \qquad \text{(XII)}$$

The range of medium initial tension ends with that value of V for which

$$-\gamma_h K_h + (1 + \gamma_h)\ V = -142 + 1.45\ V$$

becomes positive, i.e., $V = 98$. The range of medium initial tension is therefore very small, as was to be expected.

T. High Initial Tension ($V > 98$).

The expression for Y_3 is the same as for medium initial tension. Y_4 and Q_u are, however,

$$Y_4 = 0.388\ K_h - 38.0 - 0.885\ V \qquad (22)$$

$$Q_u = 0.205\ K_v + 0.109\ K_h + X_u - 0.719\ V. \qquad (23)$$

The equations are therefore, as follows:

$$650\ K_v - 423\ K_h + 1690\ X_u - 903\ V = 0 \qquad (I)$$

$$0.838\ K_v + 0.860\ K_h - 0.0138\ X_u - 203.9 - 1.75\ V = 0 \qquad (II)$$

$$27.3\ K_v + 82.4\ K_h + 133\ X_u - 11380 - 165\ V = 0. \qquad (III)$$

From equations (II) and (III):

$$K_v = 2.52\ X_u + 154 + 0.044\ V \qquad (IV)$$

$$K_h = -2.45\ X_u + 87.2 + 1.99\ V \qquad (V)$$

And then, from equation (I) we have in sequence:-

$$X_u = -\ 14.5 + 0.394\ V \qquad (VI)$$

$$K_v = 117 + 1.03\ V \qquad (VII)$$

$$K_h = 123 + 1.03\ V \qquad (VIII)$$

$$Q_o = 59.7 \pm 0.0\ V \qquad (IX)$$

$$G_v = -91.0 + 0.98\ V \qquad (X)$$

$$G_h = -96.0 + 0.98\ V \qquad (XI)$$

$$Q_u = 22.9 \pm 0.0\ V \qquad (XII)$$

The independence (or imperceptibly small dependence) of the horizontal forces Q_o and Q_u on V is marked. It is based on the particular dimensions of the airplane and is not a general property.*

*In any case it is certain that Q_o and Q_u are not completely independent of V. Whether in other airplanes of the S.S.W. type they also depend but little on V, must appear from further calculation. Some check is perhaps given by the following: If the strut has no lateral depth and the system is statically determinate, Q_o and Q_u are completely independent of the initial tension, even for low and medium initial tension, where Q_o and Q_u in the preceding example are dependent on the initial tension.

The coefficients of V in the expressions for the cable tensions K_v, K_h, G_v, G_h, differ but little from 1. Therefore, these tensions increase approximately as the initial tension.

IV. Treatment of Case B.

Case B differs from case A in the exterior forces. All quantities, however, which only depend on the geometrical disposition of the airplane, remain unchanged. Hence, in all equations, the coefficients of V are unchanged; only the numerical terms being altered. Hence the calculation can be briefly recapitulated.

In the first place

$$\Delta x_1 = 10^{-3} (10.7\ Q_o + 413) \tag{8}$$

$$\Delta x_4 = 10^{-3} (15.5\ Q_u + 319). \tag{9}$$

The displacements Δy_1 and Δy_2, therefore, contrary to case A, receive fixed terms

$$\Delta y_1 = 10^{-3} (5.33\ K_v + 0.77\ K_h - 5.84\ X_u + \\ + 225 - 3.88\ V) \tag{10}$$

$$\Delta y_2 = 10^{-3} (0.75\ K_v + 4.11\ K_h - 3.02\ X_u + \\ + 90.0 - 3.71\ V). \tag{11}$$

Further

$$P_v = 5.18 + 1.68\ \Delta y_1 \tag{16}$$

$$P_h = -\ 129 + 1.33\ \Delta y_2, \tag{17}$$

for which, in conjunction with equations (10) and (11),

$$Y_1 = 0.461\ K_v + 0.0013\ K_h - 0.0098\ X_u + \\ + 5.56 - 0.0065\ V \tag{18}$$

$$Y_2 = 0.0010\ K_v + 0.471\ K_h - 0.0040\ X_u - \\ - 129 - 0.0049\ V. \tag{19}$$

Lastly:

$$R_v = 20.2, \qquad R_h = -89.9$$

The left-hand sides of the rigidity equations (equation (1)) are distinguished, for all initial tensions, from those of case A by the same numerical constant term +7020 derived from Δx_1 and Δx_4.

In the same way, the constant numerical terms of equations (II) and (III) are the same for all initial tensions. Since the remaining terms are already known from case A, we need only write equations (I), (II) and (III) for low initial tension.

S. Low Initial Tension.

Since

$$Y_2 = 20.2 \quad (21) \qquad \text{and} \quad Y_4 = -89.9 \qquad (22)$$

we have

$$399\ K_v - 556\ K_h + 1690\ X_u + 7020 - 22.6\ V = 0 \qquad (I)$$

$$0.463\ K_v + 0.471\ K_h - 0.0138\ X_u - 193.5 - 0.0114\ V = 0 \qquad (II)$$

$$0.0790\ K_v + 37.2\ K_h + 133\ X_u - 19200 - 0.387\ V = 0 \qquad (III)$$

From these

$$X_u = 62.4 + 0.00445\ V = Q_u \qquad (VI)$$

$$K_v = 123 + 0.0302\ V \qquad (VII)$$

$$K_h = 290 - 0.0055\ V \qquad (VIII)$$

$$Q_o = 6.3 + 0.00232\ V. \qquad (IX)$$

The conditions for low initial tension are:

$$-0.777\ K_v + 1.78\ V = -95.6 + 1.76\ V < 0$$

$$-0.782\ K_h + 1.78\ V = -226 + 1.78\ V < 0.$$

They are satisfied for $V < 54.4$. For this value, the first condition ceases to be satisfied. Within the range of low initial tension, the condition $V < 54.4$ is, therefore, included just as in case A, a range of medium initial tension, in which the front weight cables are taut. This region is, however, considerably greater than in case A , as is here obvious.

This can be easily explained. In case A , stronger air forces act upward on the lower rear spar than on the lower front spar. In case B, the upward directed air forces on the rear spar are still greater, but on the front spar the air forces act downward. The lower front spar accordingly deflects further from the upper wing than the rear spar, and hence the front anti-lift wire becomes taut before the rear one. This effect is greater in case B than in case A.

Medium Initial Tension, M_v.

The rigidity equation (I) and the equilibrium equations (II) and (III) give

$$X_u = 52.9 + 0.187\ V \qquad \text{(VI)}$$

$$K_v = 80.0 + 0.798\ V \qquad \text{(VII)}$$

$$K_h = 268 + 0.42\ V \qquad \text{(VIII)}$$

$$Q_o = 2.2 + 0.066\ V \qquad \text{(IX)}$$

$$G_v = -62.1 + 1.16\ V \qquad \text{(X)}$$

$$Q_u = 69.3 - 0.118\ V. \qquad \text{(XII)}$$

The region of medium initial tension ends with that value of V for which

$$-0.782\ K_h + 1.78\ V = -209 + 1.45\ V$$

is positive and hence with $V = 144$. It extends from $V = 54$ to $V = 144$ and is large in contrast with case A. Within this range, the tensions increase rapidly in the front cables. The horizontal forces change least, the upper increasing slightly and the lower decreasing, about twice.

T. High Initial Tension ($V > 144$).

$$X_u = 22.6 + 0.394\ V \qquad \text{(VI)}$$

$$K_v = 43.8 + 1.03\ V \qquad \text{(VII)}$$

$$K_h = 182 + 1.03\ V \qquad \text{(VIII)}$$

$$Q_o = 12.2 \pm 0.0\ V \qquad \text{(IX)}$$

$$G_v = -34.0 + 0.98\ V \qquad \text{(X)}$$

$$G_h = -142 + 0.98\ V \qquad \text{(XI)}$$

$$Q_u = 51.4 \pm 0.0\ V. \qquad \text{(XII)}$$

V. Stress in the Spars.

If the initial tension is plotted as abscissa and one of the stresses, for example K_h, as ordinate, a curve is obtained which consists of a broken line with three straight parts, one

for each of the three regions of initial tension. Naturally the tensions in the airplane vary continuously with the initial tension. The parts of the curve must, therefore, join at the boundary points of the regions without a jump. This gives sensitive tests of the correctness of the calculation. In the present example, they agree within the limit of permissible error. Several general conclusions can be drawn from the results, when the influence of the initial tension on the longitudinal forces in the spars is investigated.

Let the longitudinal forces in the spars be represented in accordance with Fig. 2.

S_1	Longitudinal	force	in	upper	front	spar
S_2	"	"	"	"	rear	"
S_3	"	"	"	lower	front	"
S_4	"	"	"	"	rear	"

Each of these forces is the result of two component forces.

In the first place, the horizontal forces, through the intermediation of the internal stresses of the wing, set up longitudinal forces in the spars which change discontinuously at the joints. Let the arithmetical mean S_q, of the longitudinal forces acting in the area between the fuselage fastening and the strut be one component of the longitudinal force S. The forces S_q, are linear functions of the horizontal forces Q_o or Q_u, in case A without a constant term, and in case B, with a constant term.

	S_{1q}	S_{2q}	S_{3q}	S_{4q}
Case A	$0.76Q_o$	$-2.22Q_o$	$1.99Q_u$	$-3.85Q_u$
" B	$0.76Q_o + 35.2$	$-2.22Q_o - 92.0$	$1.99Q_u + 41.4$	$-3.85Q_u - 81.0$

In consequence of the wire tensions, a second component force S_k, appears in those spars, to the strut ends of which stressed wires are attached. These are always compression forces which arise for all initial tensions in the upper spars, for medium tension in the front lower spar and for high initial tension in all spars, and coincide with the negative z component of the tension in the attached cable.

Then,

$$S = S_q + S_k \tag{26}$$

in which $S_k = 0$, when no stressed wire is attached.

If the expressions Q_o and Q_u are introduced into the values of the tensions S_q by means of the initial tension, and S_k is also represented by the initial tension, the following table is obtained.

		S_1	S_2	S_3	S_4
Case A	S	-137 -0.0241V	-327 -0.0003V	+46.0 +0.0089V	-89.0 -0.0171V
	M	- 80 -0.632V	-277 -0.513V	+160 -1.20V	-134 +0.455V
	T	- 55 -0.881V	-240 -0.900V	+122 -0.82V	-6.0 -0.84V
Case B	S	- 65 -0.0241V	-360 -0.0003V	+165 +0.0089V	-321 -0.0171V
	M	-31.5 -0.632V	-329 -0.513V	+231 -1.20V	-348 +0.455V
	T	+7.1 -0.881V	-278 -0.900V	+172 -0.82V	-158 -0.84V

The specially important tensions S_2 and S_4 are represented in Fig. 6.

If the basic weight of the airplane $G = 740$ kg (1631.4 lb) is increased to a multiple $m\,G$, only the constant terms increase m-fold, while the coefficients of V, on the other hand, remain unchanged. The spar tensions increase in proportion to the total load, only when the initial tension increases proportionately. It is, therefore, advisable not to express the initial tension as hitherto in kilograms but in percentage of the total load. This is the unit in which the tensions are measured. Then the ranges of the three initial tensions are:

	Initial tension		
	S	M	T
Case A	Below 12.7%	From 12.7 to 13.2%	Above 13.2%
Case B	" 7.3%	" 7.3 " 19.5%	" 19.5%

	Case A						
V . . . . . lb	0	110.2	220.5	330.7	440.9	551.2	661.4
V . . . . . kg	0	50	100	150	200	250	300
V . . . . . %	0	6.8	13.5	20.3	27.0	33.8	40.5
S_1	-137	-138	-143	-187	-231	-275	-319
S_2	-327	-327	-330	-375	-420	-465	-510
S_3	+46	+46	+40	-1.0	-42	-83	-124
S_4	-89	-90	-90	-132	-174	-216	-258
Buckling factors of safety Rear upper	5.7	5.7	5.7	5.0	4.5	4.0	3.7
Buckling factors of safety rear lower	13.0	13.0	13.0	8.7	6.6	5.3	4.5

	Case B						
V . . . . . lb	0	110.2	220.5	330.7	440.9	551.2	661.4
V . . . . . kg	0	50	100	150	200	250	300
V . . . . . %	0	6.8	13.5	20.3	27.0	33.8	40.5
S	-65	-66	-95	-125	-169	-213	-257
S	-360	-360	-380	-413	-458	-503	-548
S	+165	+165	+111	+49	+8.0	-33	-74
S	-321	-322	-302	-284	-326	-368	-410
Buckling factors of safety Rear upper	5.2	5.2	4.9	4.5	4.1	3.7	3.4
Buckling factors of safety Rear lower	3.6	3.6	3.8	4.0	3.5	3.1	2.8

The compression in the spars generally increases with increasing initial tensions. This compression, hardly noticeable in the range of low initial tension, is considerable with high initial tension. With medium initial tension, the compression in the rear lower spar is slightly diminished. By initially stressing the wires, the spars are not appreciably relieved. This is the principal result of the calculation.*

The question also arises as to how much the initial tension diminishes the strength of the airplane. In the above cases, only the rear spars are endangered and, indeed, in the absence of initial tension, in case A principally, the upper spar, and in case B, the lower spar. As a measure of the danger, the Ehler's buckling safety factors of the parts between the fuselage support and the strut are given in the table, in which these parts are considered as hinge-jointed at both ends. This assumption appears correct for the lower spar, but is certainly too unfavorable for the continuous upper spar. The first values which fall below the safety factors officially required, are printed dark.

* This result apparently contradicts the view that if the rear antilift wire is stressed, it would be expected to support and relieve the rear lower spar. On the other hand, the stressed antilift wire transfers a component of the cable tension to the spar. The calculation shows that, of the two opposing effects, the loading preponderates. For medium initial tension, in which the lower spar is slightly relieved, the rear weight cable is not in tension. This effect is not explained by support from an attached cable, but is the result of the mutual support of the spars tightly held together by the initially stressed wires. The relations must be further explained by subsequent calculations for other airplanes. According to a verbal communication from H. Reissner, the stagger should be radically changed.

In case A, for the initial tensions under consideration, the upper spar has a smaller factor of safety than the lower. In case B, the reverse is true. The official factor of safety is first fallen short of in the case of high initial tension in case A at 20%, and in case B at 27% of the total load. In case B, where the lower spar, without initial stress, is already near the limit, this fact is especially worthy of consideration. The temporary relief for medium initial tension here has a very favorable effect. In order that, with a five-fold load in case A, the upper spar may reach the breaking limit, we must have $V = 5 \times 740 \times 20.3/100 = 750$ kg, so that with 3.5 times the load, the lower spar is unsafe in case B, the initial tension amounting to 700 kg. Neither value is of practical importance. As a matter of fact, the Royal Airplane Directorate finds the antilift wires almost always slack in loading tests (Verbal communication from W. Hoff), so that airplanes are in a condition of low initial tension with a multiple load. If one applies this result to the airplane shown above in case A, the initial tension does not amount to more than 450 kg.

A moderate initial tension of the cable up to about 15% of the total weight, exerts no harmful influence on the strength of the SSW airplane and is even advantageous for the lower rear spar.

Translated by
National Advisory Committee
for Aeronautics.

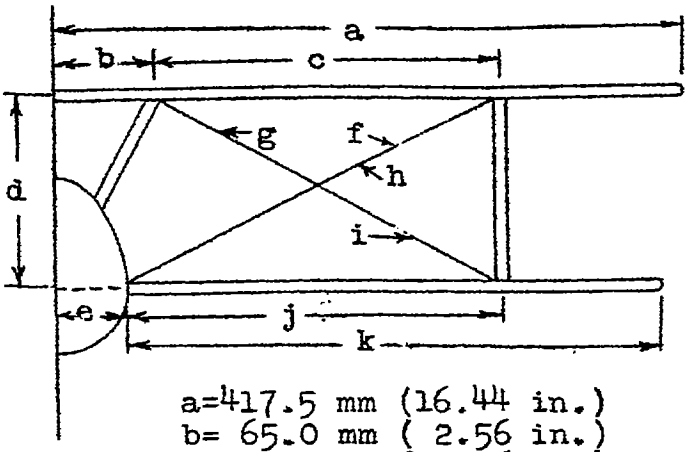

a=417.5 mm (16.44 in.)
b= 65.0 mm (2.56 in.)
c=230.0 mm (9.06 in.)
d=133.0 mm (5.24 in.)
e= 46.0 mm (1.81 in.)
j=249.0 mm (9.80 in.)
k=354.0 mm (13.94 in.)
h=f, lift wires, 4.5

i=g, antilift wires, 3.9

Fig. 1

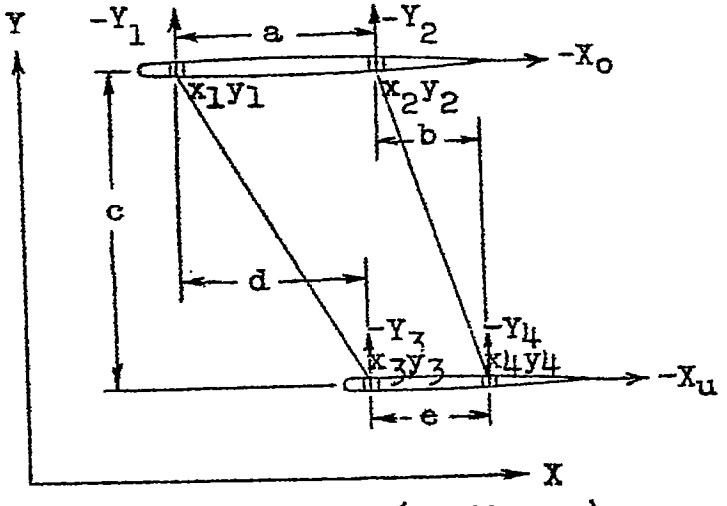

a= 79.0 mm (3.11 in.)
b= 37.5 mm (1.48 in.)
c=133.0 mm (5.24 in.)
d= 72.5 mm (2.85 in.)
e= 44.0 mm (1.73 in.)

Fig. 2

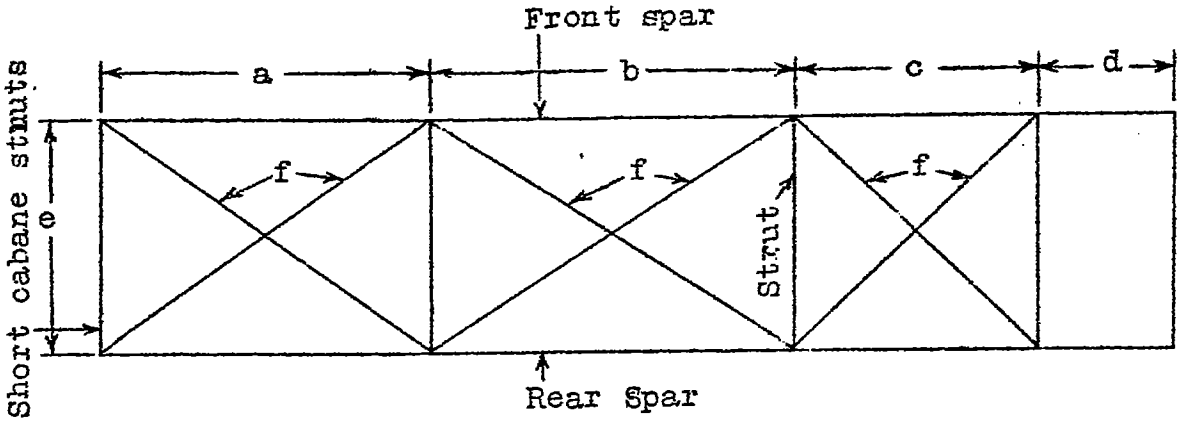

a=110.0 mm (4.33 in.)
b=120.0 mm (4.72 in.)
c= 80.0 mm (3.15 in.)
d= 42.5 mm (1.67 in.)
e= 79.0 mm (3.11 in.)
f= 2.0 mm (.08 in.) wires (two)

Fig. 3 Upper wing plan

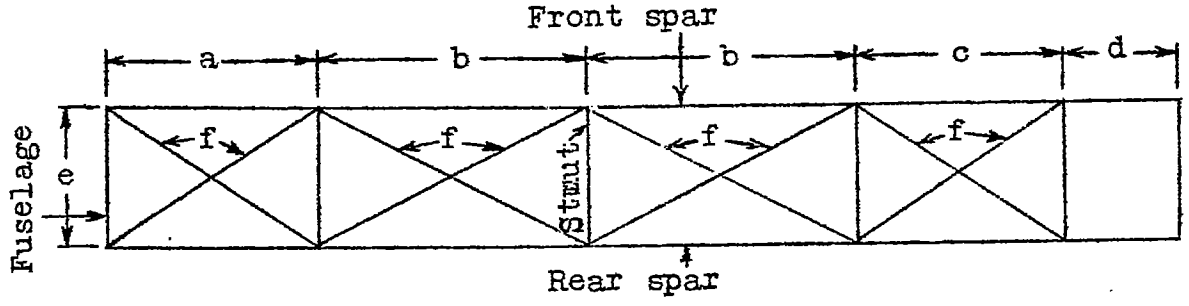

a=70.0 mm (2.76 in.)
b=87.5 mm (3.44 in.)
c=68.5 mm (2.70 in.)
d=36.5 mm (1.44 in.)
e=44.0 mm (1.73 in.)
f= 2.0 mm (.08 in.) wires (two)

Fig. 4 Lower wing plan

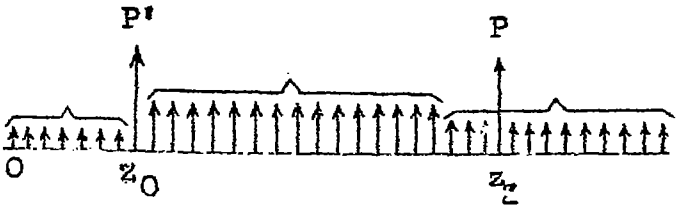

Fig. 5

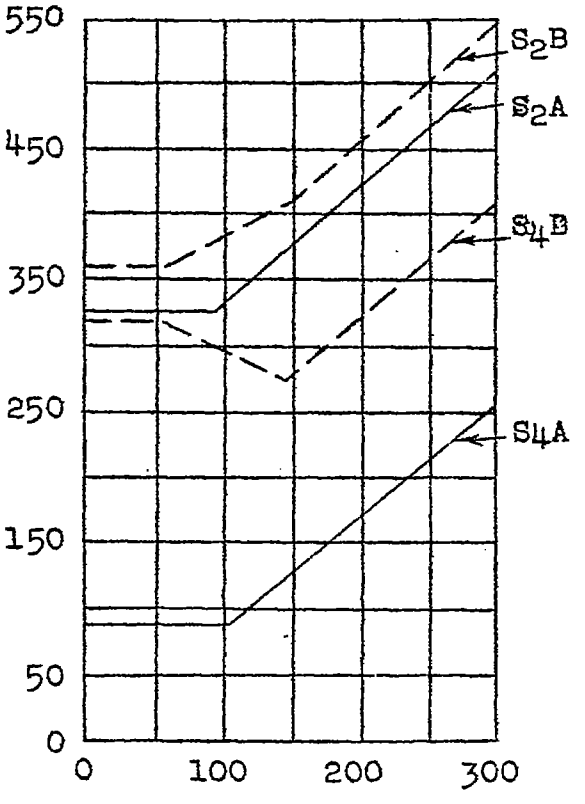

Fig. 6