NATIONAL ADVISORY COMMITTEE
FOR AERONAUTICS

TECHNICAL NOTES

NATIONAL ADVISORY COMMITTEE FOR AERONAUTICS.

No. 145

AERONAUTICAL INSTRUMENTS.

By Kurt Bennewitz.

From Technische Berichte, Volume III, No. 5.

June, 1923.

NATIONAL ADVISORY COMMITTEE FOR AERONAUTICS.

TECHNICAL NOTE NO. 145.

AERONAUTICAL INSTRUMENTS.*

By Kurt Bennewitz.

The task of observing the position of an airplane engages the attention of the pilot constantly. He generally solves it by means of his sense of sight and his sense of feeling, the former being the more reliable. When sight fails, as, for example, in fog or at night, with no horizon visible, he can then only rely on his feeling and it has been found that even good pilots fail under such circumstances.

The necessity of making the reliability of piloting independent of such conditions has recently become more urgent. To aid the muscular sense, a number of instruments are in use or proposed, the success of which depends not only on their serviceability but also on the capacity of the pilot to interpret their indications correctly. Such instruments are called "aeronautical instruments."

The failure of the pilot's natural sense of position arises, for example, in a fog, due to the loss of the systems of reference. There are two such systems: the stationary ordinates of the earth, most clearly defined by the horizon and the orientation of some distant point of the landscape; and the system moving with the air current, that is, the coordinate system stationary in the air, which is not visible but which the pilot perceives through the accelerations or, in other words, through his sense of feeling.

* From Technische Berichte, Volume III, Part 5, pp. 160-165 (1918).

The air forces acting on the airplane depend on its motion relative to the latter system.

I. Inclinometer with stationary system of reference.- In the first place, the pendulum, which appears in numerous forms, must be mentioned. Under this heading is included every type of instrument acting under the influence of gravity, either as a solid body or as a liquid (level and U-tube). A pendulum can either oscillate in one plane only and is then employed either as a transverse or as a longitudinal level, or it may swing freely in all planes giving simultaneously both inclinations. The first is better suited to wheel-control, which divides the transverse and longitudinal steering into their components; and the second to lever control which unites the two control movements. The longitudinal pendulum generally shows the angle of attack, while the lateral pendulum shows the apparent angle of banking. Each pendulum has its natural period, which makes its application as an inclinometer difficult and which must be damped by air or other fluid (less often by magnetic or electric eddy currents), so that the pendulum may take up its position almost without oscillation. Practically, the damping may be made as great as desired. The greater it is, however, beyond a certain limit, the slower the pendulum comes to rest. Hence a mean is chosen in which suitable conditions are produced, so that, for oscillations of the airplane, proportionately small angular velocities appear. Experiments have shown that even quite strongly damped pendulums come to rest quickly enough. The

strongest usable damping corresponds to a damping period of two seconds for 90°. Allowance must, however, be made for the fact that the viscosity of the damping fluid rapidly increases with decreasing temperature. The given limit must therefore be measured at the lowest temperature encountered (-40°C). It is useless to attempt to make perfectly accurate pendulums, the natural oscillation period of which is infinitely small, whether by combination of several pendulums with different degrees of damping, or by similar devices, for such contrivances are fundamentally impossible.

Up to the present, fluid pendulums in the form of levels have proved to be the best (Fig. 1) with which the inclination is determined by the position of an air bubble. With these instruments one must become accustomed to the difference, as compared with solid pendulums, in regard to the method of reading. If the instrument is inclined to the left, the pendulum also swings to the left, but the air bubble moves to the right.*

The natural direction indication of the solid pendulum and the good damping properties of the level (Fig. 2) are combined in the Fuess inclinometer, which consists of a glass tube, convex downward, filled with fluid, with a sphere rolling within. By changing the fluid and the size of the sphere, the damping may be varied at will, and by varying the curvature, the sensitivity as well.

All pendulums (levels, etc.) have the common property of coming to rest in the direction of the resultant of all the forces involved. When at rest or in uniform rectilinear flight (horizontal or inclin-

* In U-tube inclinometers the meniscuses have already been exchanged crosswise.

ed) this direction is vertical, but not in accelerated, retarded, or curving flight. On a curve, quite large lateral forces are generated which act so that the airplane adapts itself to the curve. The transverse pendulum also sets itself in the direction of the vertical axis of the airplane, so that in a perfectly flown curve it shows no reading. The correctly flown curve is, however, (within permissible limits) a condition of normal flight, equally with rectilinear flight. Even though the pendulum tells nothing as to the position of the airplane relative to the earth, it indicates the existence of a condition of normal flight, if by this is understood a condition in which the resultant of all the forces acting on the airplane coincides with the vertical axis of the airplane.

Consequently, the level pendulum used as a lateral inclinometer is very useful in making a banked turn. In fact, it is the only one for this purpose.

Pendulums and related instruments can generally be designated as inclinometers of the second kind, because they only show the attitude conditionally, owing to the influence of the centrifugal and other inertia forces. Most pilots are not satisfied with the lateral pendulum, but demand a real inclinometer which functions correctly on a curve.

This problem puts disproportionately higher demands on the constructor. A solution has been attempted with an astatic pendulum, i.e. one pivoted at its center of gravity. Balanced streamlined shapes have also been considered. All these types failed, however, in consequence of the unavoidable friction.

The particular instrument most used in practice is the Anschütz "flying horizon" (Fig. 3), which is an almost neutral gyroscopic pendulum. This inclinometer should, with careful construction, maintain its vertical position independent of turns or accelerations. Practice has shown that this only holds good for short periods and not very sharp turns. In turns of longer duration, however, even when wide, it gradually deviates to such an extent that its usefulness ceases. It is not impossible that the device may yet be technically perfected, but its cost would then be out of proportion to its advantages in comparison with other inclinometers.

The question as to whether the gyroscope in such an inclinometer of the first type can be replaced by something else, must be negatively answered at present. All other fields of force to which the inclinometer could be related are too weak or indefinite, e.g. the magnetic field. It might be supposed that the fact of a turn could be inferred from the magnitude of the acceleration. Such experiments were made, but have been discontinued since the rising and falling of the airplane, as well as the effect of gusts, completely confuse the curve indications. It might also be supposed that the use of the magnetic dip in conjunction with an ordinary compass might lead to something which could be used as an inclinometer. So far, however, all such attempts have been unsuccessful. In recent times, turn indicators have been produced which, in conjunction with an inclinometer of the "second class," offer a complete substitute for an absolute inclinometer. Since the pendulum satisfies all demands in relation to normal flight conditions, it

is only necessary to combine it with an instrument indicating the curve the airplane is making. The instrument most used for measuring turns, up to the present time, is the Drexler steering indicator (Fig. 4). As the pilot's horizon, it contains a gyroscope which, however, does not possess three degrees of freedom but only one and a half, i.e. one free axis and one controlled by a spring. On a change of direction, the gyroscope does not maintain its direction, but is compelled by its method of suspension to make the change by which the precession is absorbed by the spring. The instrument gives only the curve about the vertical axis of the airplane and not the spiral or angle of attack. It has fulfilled, except for temporary disturbances, its very delicate task satisfactorily, and has been generally adopted on giant airplanes.

If the method of working of this turn meter be compared with that of an ordinary compass, the difference consists in the fact that the compass gives the variation from a fixed direction (north), while the turn meter gives the angular velocity. It follows that any good compass can be used as a turn indicator. The advantage of the Drexler indicator, however, lies in the fact that it is much more sensitive to changes of direction and eliminates the swinging of the compass card. Its use therefore is justified only when quite small angular velocities are to be determined.

Other countries occasionally used a compass which doubled the turning angle by means of a multiplying device. This type of construction could be further improved by making the magnification not mechanical but optical by means of a rotating mirror. Another type

of turn indicator, which also shows the angular velocity, is worthy of mention. A jet of water is allowed to spurt horizontally along the airplane axis against a partition. The point of impact with the partition moves outward on a turn. The whole must be suspended on gymbals. The form may be variously modified. Such a turn meter may, in combination with one or two level pendulums, completely replace an instrument measuring absolute inclination, as referred to a fixed axis. This combination is effected in the Drexler indicator which, at present, is the most perfect inclinometer.

II. Inclinometer with moving axes.- Up to the present time, these instruments do not show all the inclinations but only certain quantities, which, however, tell the pilot more than some of the instruments previously mentioned. Except for the vertical force of gravity, an airplane in the air has no connection with the earth, but only with the surrounding air. A bird knows how to appraise and use the air current much better than the best pilots. When flying is comprehended as an art, an opportunity is at hand for greater perfection. In our minds we still refer the conditions of flight too much to the earth.

The longitudinal inclinometer in the form of a pendulum shows whether an airplane has a definite angle of attack but not whether this angle (in climbing) is that at which the airplane should be flown under the existing conditions, or whether it is dangerous. Except for engine power, etc., the greatest permissible angle of incidence depends essentially on the density of the air, or on the

altitude. Near the ground it is much greater than at a high altitude. Only in combination with an altimeter (and usually also with a revolution counter) have the indications of a level pendulum any aeronautical value. There are also so-called dynamic pressure gages which measure the pressure generated by the motion of the airplane. These are used in conjunction with Pitot or Venturi tubes. The Venturi (Bruhn's and others) only are now employed (Fig. 5), as it is more practical. Hitherto these instruments have only been employed as speed indicators, the readings being incorrect only in so far as they are dependent on the air density. In flight such an instrument shows the slightest movement of the elevator. Naturally the cause is the simultaneously occurring change in speed, but neither the speed nor the angle of attack tell the pilot anything as to the safety of his flight, which is only given by the magnitude of the aerodynamic pressure. For every airplane there is a minimum value which must be attained, or else it is out of control. This value is independent of the air density, or the altitude, and depends only on the load. It can be determined by a test flight and indicated by a mark on the speed indicator. Ordinary speed indicators now have two such marks, one for climbing (with full engine power) and the other for gliding (with throttled engine). The difference lies in the different air resistance of a quick and slow-running propeller. In addition, the maximum aerodynamic pressure may be given, corresponding to the permissible overloading of the airplane. This has, however, less significance. As may be seen, an aerodynamic pressure speed indicator is an aeronautical instrument in the

above sense and only secondarily a means for determining the speed.

By the term "similar flight conditions" are meant those in which similar external disturbing moments (caused by eddies or squalls) occasion equal danger. Confining ourselves first to the danger of tail slipping, the curve of greatest danger can be obtained in the simplest way by taking an airplane in a continuous climb up to its extreme height limit. The inclination of the longitudinal axis of the airplane corresponds at any altitude to the maximum danger and the curve is one of similar flight conditions. It may be noted that the aerodynamic pressure speed gage indicates the same reading during the entire flight. Since this also holds for any less dangerous flight condition, the aerodynamic pressure indicator shows the relative safety of the flight.

A similar method may be employed as regards lateral stability. As a transverse inclinometer, the pendulum does not give the true altitude of the airplane, but only its flying condition as regards the danger of side slip, the normal flying condition being such that the transverse pendulum gives no indication. With a speed indicator as longitudinal inclinometer, on the other hand, one can only speak of a permissible flying condition in which the aerodynamic pressure is above a minimum value. While the normal flying condition should never be abandoned, even in the steepest curves and loops, one can not avoid approaching the minimum value of the dynamic pressure, unless prepared to abandon climbing.

The transverse pendulum and the speed indicator supplement each other as aeronautical instruments, while the longitudinal pendulum is

taken separately. It may be remarked that the curve of quickest climb is a curve of nearly constant aerodynamic pressure.

The question now remains as to whether the turn indicator can be freed from reference to the earth. If an airplane describes a turn in still air, the outer wing tip describes a longer path than the inner. The aerodynamic pressure is consequently greater at the outer than at the inner wing tip. Attempts have been made to measure this difference of pressure by means of a differential instrument, in order to be able to deduce the magnitude of the curve in this way (Fig. 6). The experiments have thus far met with but little success, however. The technical difficulties of finding sufficiently sensitive instruments and obtaining complete symmetry of the arrangement may be disregarded here, but it is easy to perceive that air currents of different strength at the wing tips of an airplane flying in a straight line must exercise the same effect on the instrument as a turn. In Fig. 7, let AB be the direction of flight and CD the ends of the wings. The dotted lines represent an air eddy such that the air velocity in EC is smaller than in FD. The airplane comes from still air at A in normal rectilinear flight into the eddy. At D there is a greater aerodynamic pressure than at C. This raises the surface D and presses it backward, so that the airplane turns to the right towards B and at the same time dips outward at C. The condition of flight has thus been shifted toward the danger limit, while the instruments show the following indications:

(a) The transverse pendulum: large swing to the left, increased by the centrifugal force of the turn to the right.

(b) The aerodynamic pressure turn-meter indicates a left-hand turn (instead of the actual right-hand turn), as can be readily seen.

(c) The Drexler steering indicator: a right-hand turn. By the use of instruments (a) and (b) the pilot would get the impression that he had overbanked inward on a left-hand turn. Since this is known to be dangerous, he would first rectify the banking and then, by steering to the right, leave the eddy by the quickest route. By the right-hand turn he would cause the reduced pressure at C to vanish. This correction is therefore the right one. By the use of instruments (a) and (c) the impression is given of a skidded right-hand turn. Since this is harmless, the pilot would either take no precaution, or attempt to offset it by steering to the left, with the result that the dangerous position would be made worse, since the aerodynamic pressure at D would further increase and the airplane would be still more depressed at C. At the same time, the transverse pendulum would be brought nearer to the zero position by the forced left-hand turn. By this means the airplane would be steered straight into the eddy, instead of avoiding it. In all this, the instruments (a) and (c) would indicate nothing in the way of danger.

Instruments (a) and (b), in spite of false indications, brought about the right correction, while instruments (a) and (c) led to the wrong correction, in spite of apparently correct indications. Any pilot who, without understanding the phenomena, only judges by the eye, is always wrongly inclined to condemn the indications of the pressure turn indicator. He should not expect this instrument to replace the compass.

The influence of variable pressure is more serious and this fact causes the above-described pressure turn meter to fail of its purpose.

The aerodynamic pressures on the right and left are both dependent on the air density and consequently their difference, which decreases with the air density. If an airplane describes two similar turns with respect to radius and angular velocity at different altitudes, the differential instrument indicates a wider turn at the greater altitude, while, inversely, of two equal turns, that described in rarer air is the more dangerous. The instrument accordingly fails here as a danger indicator. This, however, can be remedied. If p_1 and p_2 are the two pressures, then the danger is proportional to the difference $p_1 - p_2$, and inversely proportional to the total pressure, i.e. the mean value $\frac{p_1 \ \& \ p_2}{2}$. Without great inaccuracy, since p_1 is nearly equal to p_2 put $\frac{p_1 + p_2}{2}$ equal to either one of the pressures, say to p_2.
Then $G = A\left(\frac{p_1}{p_2} - 1\right)$. A criterion of the danger is, therefore, $\frac{p_1}{p_2}$ and not $p_1 - p_2$. Such an instrument can be easily produced, if calibrated to indicate $\log p_1 - \log p_2$.

Experience will show - without invalidating the previous considerations but only amplifying them - whether a satisfactory result will be obtained in this way. Experiments are in preparation for the determination of the air current direction for the same purpose. It is noteworthy that other countries also adopted a pressure turn indicator or the differential instrument. This shows the need of such an instrument. If the comparison of pressure turn indicators and the Drexler steering indicator has been unfavorable to the latter, it is chiefly in the case of the small airplane, since for giant airplanes an eddy is much less serious. On giant airplanes the steering indicator has been generally adopted. It is like a small boat and a large steamer on a rough sea. The boat is strongly affected by the waves and must steer skilfully through them. The steamer does not feel them much and continues undisturbed on its course.

Summary.- A suitable outfit of aeronautical instruments for steering consists of:

(1) A transverse inclinometer (pendulum or level);

(2) A longitudinal inclinometer (pressure speed meter);

(3) A turn meter (a) for large airplanes (Drexler steering indicator), (b) for small airplanes (probably an improved pressure turn meter).

Translated by
National Advisory Committee
for Aeronautics.

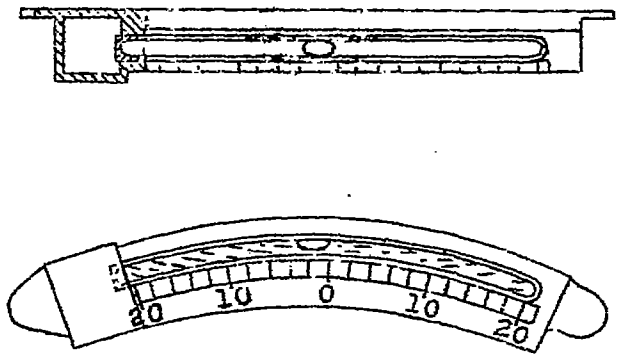

Fig.1. Fluid level.

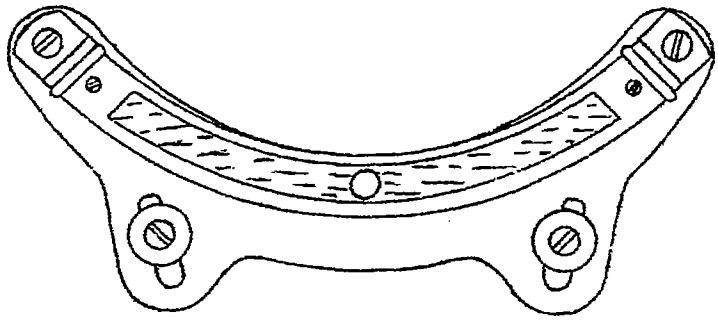

Fig.2. Fuess inclinometer.

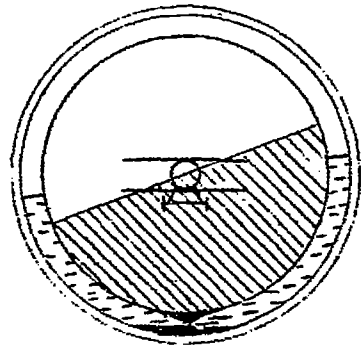

Fig.3. Anschütz flying horizon.

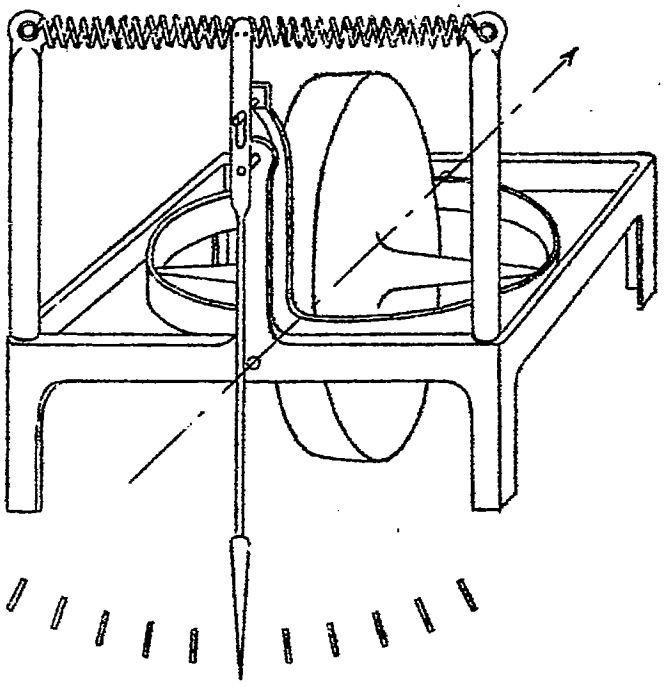

Fig.4. Drexler steering indicator.

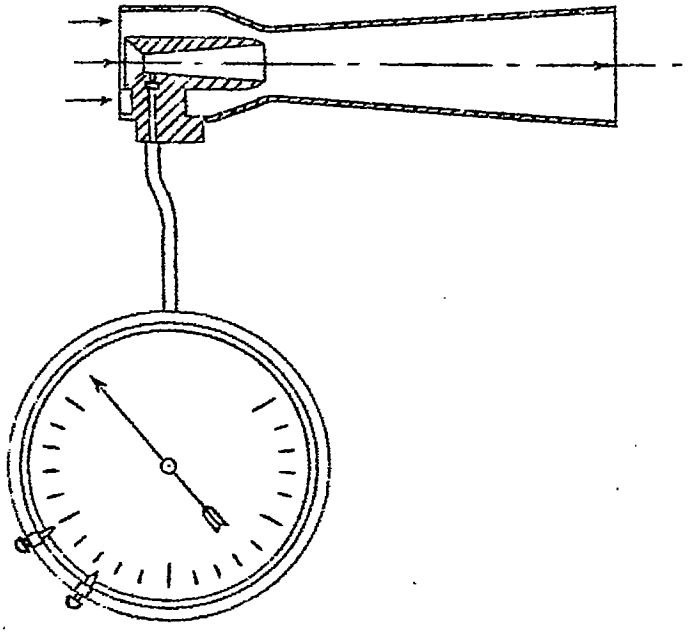

Fig.5. Pressure indicator.

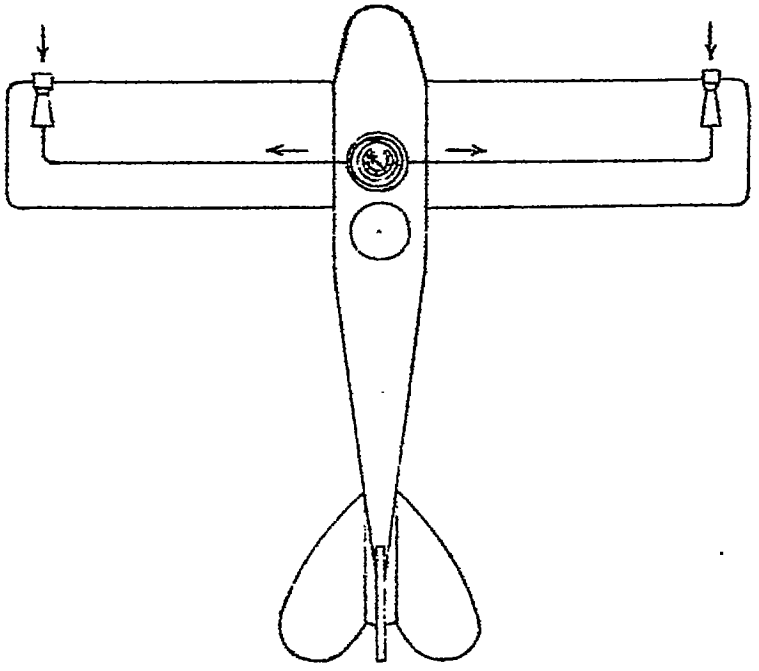

Fig.6. Pressure at wing tips.

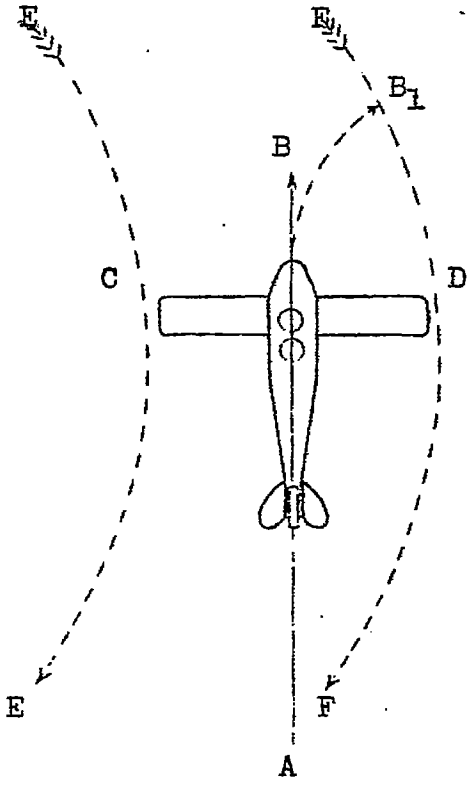

Fig.7.