NAL ADVISORY COMMITTEE
FOR AERONAUTICS

AUG 7 1923
MAILED

Mr Truscott

TECHNICAL NOTES

NATIONAL ADVISORY COMMITTEE FOR AERONAUTICS.

No. 152

THRUST AND POWER REQUIRED IN CLIMBING.

By Georg Koenig.

From Technische Berichte, Volume III, No. 5.

August, 1923.

NATIONAL ADVISORY COMMITTEE FOR AERONAUTICS.

TECHNICAL NOTE NO. 152.

THRUST AND POWER REQUIRED IN CLIMBING.

By Georg Koenig.

The attempt has often been made to deal analytically with the phenomena of climbing, partly on the basis of methods used in other countries, in which highly simplified assumptions are made in order to be able to deduce the formulas easily. The following article shows that the phenomena of climbing flight can be determined with sufficient accuracy, and represented very clearly, for all flight positions, by means of the thrust diagram (Zeitschrift für Flugtechnik und Motorluftschiffahrt, 1911, p.300). This method has often given good results.

I. Thrust Diagram.

The construction of the diagram is based on the knowledge that all phenomena in connection with an airplane are to be considered dependent on the velocity V, which is, therefore, regarded as a constant and chosen as the abscissa.

Next to V in importance are, the effective forces in the direction of V. As ordinates, therefore, forces are plotted which give either the thrust required, D, by the airplane, or the thrust, T, of the propeller.

The power, P, of the engine in HP (B.H.P.) for a definite R.P.M., N, is fully absorbed only at a definite velocity, V.

* From Technische Berichte, Volume III, No. 5, pp. 166-174. (1918)

At lower velocities the number of revolutions is less than N and at higher velocities, greater than N. Consequently, the output of the engine varies according to a utilization factor f. Since the propeller efficiency, η, also varies with V, the propeller thrust is

$$T = \frac{75\,\eta\,f\,P}{V} \qquad (1)$$

(See Fig. 1).

Further, the thrust per unit weight of the airplane, which may be called the specific thrust, T_u, is of great significance.

$$T_u = \frac{T}{W} = \frac{1}{V}\,\eta\,f\,\frac{75\,P}{W} \qquad (2)$$

Naturally, this also depends on V.

If it is assumed that $w_P = \frac{W}{P}$ the known total weight per HP, it must be concluded that the ordinates of T, and likewise of the T_u curve, are inversely proportional to the total weight per HP.

The required thrust of the airplane is likewise dependent on the velocity V, and is the thrust which is just necessary to keep the airplane sustained in the air with velocity, V. From the known polar curves of C_L and C_D, there is found for each point of this curve, the corresponding velocity, V, by means of the known lift equation

$$V = \sqrt{\frac{\frac{W}{S}}{C_L\,\frac{\rho}{2w}}} \qquad (3)$$

and the corresponding thrust required from

$$D = \frac{C_D}{C_L}\,W \qquad \text{(See Fig. 2)} \qquad (4)$$

where C_D includes the air resistance.

Here, too, the values per unit of weight of the airplane have enhanced importance. They are known as the gliding (or drag-lift) ratios, r,

$$r = \frac{D}{W} = \frac{C_D}{C_L} \tag{5}$$

and are also dependent on the velocity, but have a clearly defined minimum value, which will receive further consideration.

Since the weight per unit area of wing surface $w_s = \frac{W}{S}$ occurs in equation (3), it must be expected that the abscissas of the D curve will increase with the wing loading.

If both these thrust curves are brought into one diagram (Fig. 3), the thrust diagram is obtained, which shows the distribution for each flight condition. In this diagram, the difference between the propeller thrust T and the required thrust, D, is shown, i.e., the area lying between the two curves represents the excess thrust T_a, available for climbing. This difference between the thrusts can be expressed by

$$T = D + T_a \tag{6}$$

or, in terms of unit weight, by

$$T_u = r + \sigma \tag{7}$$

where

$$\sigma = \frac{T_a}{W} \tag{8}$$

will be termed the coefficient of climb. The point of intersection of the two curves holds good for $\sigma = 0$ and horizontal flight. Naturally, the diagram holds true for any flight altitude, A, ex-

cept that the thrusts corresponding to the prevailing air density at the particular altitude must be calculated from

$$\mu'_A = 0.893^{\frac{A}{1000}} \qquad (9)$$

II. Climbing Ability.

The usual efficiency figure, w_P, (weight per HP) is an index of proportionate climbing ability, the smaller it is the better, consequently it is not really suitable for determining the true climbing ability. If one considers that w_P is a ratio of weight to power, the reciprocal of w_P must be a velocity, which may be called the indicated climbing ability

$$a_w = \frac{75\ P}{W} \qquad (10)$$

This is the velocity at which the engine is capable of raising the airplane vertically. Since P is the brake-horsepower, the indicated climbing ability is independent of the velocity and is a coefficient of efficiency, which is much better suited than its weight per HP, to give an idea of the climbing ability of the airplane.

As a proof, the following figures may be compared:

Weight per HP	12.00	10.00	8.00	6.00	kg/B.H.P.
	26.46	22.05	17.64	13.23	lb/B.H.P.
Indicated climbing ability.	6.25	7.50	9.40	12.55	m/sec
	20.51	24.61	30.84	41.17	ft/sec.

A part of this climbing ability is dissipated in the eddies of the propeller slipstream and the actual climbing ability at the propeller shaft is therefore only

$$V_{T_u} = \eta \ f \ a_w \tag{11}$$

so that the equation for the thrust curve takes the form

$$T_u = \frac{V_{T_u}}{V} \tag{12}$$

and shows the close relationship between the efficiency a_w and the thrust curve. It indicates that the power transmitted by the propeller is capable of raising the airplane V_{T_u} meters per second. The velocity, V_{T_u} can be immediately calculated from the airplane data.

While T_u is to be found in the diagram as ordinates of the T curve, the form of the expression $V_{T_u} = V \ T_u$ shows that the effective climbing ability is represented by the area of the rectangle formed by V and T_u (Fig. 4), and, therefore, has a maximum value where the diagonal of the rectangle is parallel to the tangent on the T curve of the point under consideration. This generally occurs in approximately horizontal flight.

The course of V_{T_u} can be represented by a curve. It is, naturally, dependent on the propeller selected. In any case, it is not permissible to assume that V_{T_u} is invariable over a wide range. Since the engine torque is approximately proportional to the air density, we have, for the actual climbing ability at the altitude A,

$$V_{T_u} \ \mu_A$$

so that suitable curves can be drawn for each kilometer of altitude, and, in this way, a graphic representation of the decrease of climbing ability with altitude can be obtained (Fig. 5).

III. Gliding Ability.

The gliding ability, V_r, is the velocity at which the airplane loses altitude in gliding flight and corresponds to the power dissipated per unit weight of the airplane during gliding flight. Since, during gliding flight, however, the thrust exerted in the direction of V is absorbed, we have

$$DV = W\,V_r \qquad \text{from which} \qquad V_r = V\,r$$
$$r = \frac{V_r}{V} \tag{14}$$

Since V_r is the vertical component of V, the path of flight must form an angle r with the horizontal, which is determined by $r = \sin r$ [2] (more correctly $\tan r$). The ordinates of the r curve are therefore identical with the sine (or tangent) of the gliding angle. The minimum value of the gliding ratio r_o is an efficiency coefficient for the airplane of special significance. For similarly constructed airplanes, it is nearly constant and a characteristic of the construction. The smaller r_o is, the flatter the airplane glides. The smallest value yet observed is 0.105 (Aeg.C IV).

Hitherto every attempt to compare different types of airplanes with respect to velocity, has really failed. For this purpose, r_o offers a means, inasmuch as the corresponding velocity V_o serves very well as a basis for comparison. For this reason, we will call it the "basic velocity" (Fig. 6). In climbing, the velocity generally lies in the neighborhood of V_o. All other velocities may with advantage be expressed as multiples of this, in the form

$\frac{V}{V_o}$. The rectangle with sides V and r (Fig. 7), corresponds to the gliding ability V_r.

Since it is especially useful for preliminary calculations to assume the probable course of the D curve, the method of doing this will be briefly indicated.

The fundamental velocity V_o, according to equation (3), depends essentially on the wing loading and is given by the experimental coefficient C_L. The minimum value r_o of the gliding ratio is likewise an experimental value, which can perhaps be corrected by new C_D values. The gliding ability may also be determined from

$$V_r = V\ r = \sqrt{\frac{w_s}{C_L \frac{\rho}{2g}} \frac{C_D}{C_L}}$$

or,

$$V_r^2 = \frac{w_s}{\frac{\rho}{2g}} \frac{C_D}{C_L^3}$$

By this means, the known expression is brought into agreement with the constants of the airplane, especially with V_r.

The gliding ability V_r has a minimum value, when the diagonal of the rectangle is parallel to the tangent at the corresponding point of the r curve (Fig. 8). The corresponding velocity V_{min}, which differs more or less from V_o according to the shape of the curve, is that at which the least power is necessary for sustentation in the air. This is of little practical importance, however, because it is still doubtful whether this power can be

obtained by means of a propeller. In practice, the minimum value of V_r occurs at a velocity between V_{min} and V_o, but it is extremely difficult to determine this minimum accurately,

The curve of required thrust (Fig. 2) holds good only during flight near the earth. If the air density falls in the ratio μ_A at the altitude A, the velocity belonging to each angle of attack increases in the ratio $\mu_A^{-\frac{1}{2}}$. For each altitude, a new curve is necessary (Fig. 9). In these, the values of r remain unchanged, while V_r increases to

$$V_{r(A)} = V_r \, \mu^{-\frac{1}{2}} \tag{16}$$

At high altitudes, the airplane has a more rapid rate of descent, but it also glides at a higher velocity and hence the gliding angle remains the same.

IV. Available Climbing Ability.

The balancing of the forces shows a difference between the propeller thrust and the thrust required by the airplane for sustentation, which is available for climbing purposes. This excess $T_a = \sigma W$ pulls the weight W upward along an inclined plane, the inclination of which can be determined from

$$\sigma = \sin \sigma \text{ (or } \tan \sigma) \tag{17}$$

By multiplying equation (7) by the velocity V, thrust is converted into horsepower:

$$V\,T_u = V\,r + V\,\sigma$$

or

$$V_{T_u} = V_r + V_\sigma \tag{18}$$

The difference between the actual climbing ability and the gliding ability is called the available climbing ability and gives the altitude gain of the airplane in meters per second. (The nomenclature could be so chosen that climbing ability would be only the excess and hence the actual propelling ability would equal climbing ability plus gliding ability.)

Multiplication by V corresponds, in the diagram (Fig. 10), to the construction of the rectangle from the coordinates. The clearness of the relations displayed by the balance equations can therefore scarcely be surpassed.

The dependence of the available climbing ability on the velocity can be readily seen from Fig. 11. In horizontal flight it is zero. It passes through a maximum value in the neighborhood of V_o and then decreases for smaller velocities. Although there is no doubt that the path of the T curve has a decisive influence on the position of this maximum value, it will repay us to determine the limiting values between which it may move.

If a curve of required thrust is shifted along the ordinate V_o, Fig. 12 is obtained. From position 1, where the two curves just touch, the maximum value of the available climbing energy moves first towards V_o and coincides exactly with it, when the tangent to the T curve is parallel to the diagonal of the rectangle. On the further lowering of the D curve, this maximum value moves to higher values of V and tends toward the value $V^{(T_u)}$ at which the T curve itself has its maximum V_{T_u}.

In order to follow the complete course of the available climbing ability for each increase in altitude, it is convenient to use a diagram containing the T and D curves for various altitudes. We are then in a position to give the maximum value of the climbing ability at any time and to draw, for example, the corresponding barogram.

The point of contact of the T and D curves (Fig. 14), marks the climbing limit μ_W, the corresponding altitude A_W and the speed limit V_W, for the airplane at this altitude,

From experience, this velocity is 0.85 to 0.9 times the corresponding fundamental velocity

$$V_W = (0.85 \text{ to } 0.9)\ V_o\ \mu_W^{-\frac{1}{2}} \qquad (19)$$

It is mostly greater than the corresponding $V_{min}\ \mu_W^{-\frac{1}{2}}$ where V_r is known to have a minimum value.

By V_W, however, is designated a point T_W on the T curve on the position of which the climbing limit depends. At this point the effective climbing ability, in particular the product $A\ \eta$, must be as large as possible. The remainder of the T curve does not come into consideration for the climbing limit.

The climbing limit determined from μ_W can only be asymptotically approached by the airplane. It is characteristic of the type of airplane under consideration and, therefore, μ_W might also be termed the climbing characteristic. At the same time, this brings out the fact that only this fraction, and not the actual altitude A_W is the criterion.

In order to determine μ_W by calculation, it must be borne in mind that the actual climbing ability at T_W decreases in the ratio μ_W. The gliding ability, however, must increase in the ratio $\mu_W^{-\frac{1}{2}}$ if the climbing limit at which the T and D curves touch each other, is to be reached. The equation for this condition is

$$V_T \ \mu_W = V_r \ \mu_W^{-\frac{1}{2}}$$

and for the ceiling

$$\mu_W = \left(\frac{V_r}{V_{T_u}}\right)^{\frac{2}{3}} \tag{20}$$

In this equation, the values at the point of contact of the T and D curves are to be substituted (in particular for V_r).

In practice, one only speaks of climbing when the rate of climb is appreciable. This may be taken as not less than

$$V_\sigma = 0.28 \text{ m/sec} = 1 \text{ km/hr } (3280.8 \text{ ft/hr}).$$

The altitude at which the value is reached may be called the practical ceiling and can be calculated for the airplane, along with the time taken to reach it. It is admirably adapted for comparisons, since it agrees with the pilot's sensations.

V. Climbing Time.

If the pilot sets the elevator so that the total available climbing ability, corresponding to the thrust diagram, is continuously employed, the airplane climbs in the shortest time and integrates the differential equation

$$dt = \frac{d\,A}{V_{\sigma(A)}} \tag{22}$$

The climbing time is, then,

$$t = \int_0^A \frac{d\,A}{V_{\sigma(A)}} \tag{23}$$

In order to find an expression for $V_{\sigma(A)}$, it is advisable to start from the position T_w, giving the ceiling, and to introduce the rectangle V_{T_u} by V_r for ground level (Fig. 15). In climbing, the height of the rectangle V_{T_u} is smaller, while the length V_r is larger. Near the ground, the difference between these rectangles $V_{T_u}(\mu_w) - V_r(\mu_w)$ is not the available climb (as Kann has elsewhere assumed), but the difference for the limiting velocity V_w, namely, $V_{T_u}(\mu_w) - V_r$.

If it is considered that the rectangles nearly touch each other, we then have for the climb from the ground

$$V_{\sigma(o)} = V_{T_u}(I - \mu_w). \tag{24}$$

In this way are given the initial and final values of a curve, corresponding somewhat with the facts, for the performance of a climb.

In addition, the maximum value of the available climbing ability near the ground occurs for velocities above V_o. The smaller the climbing characteristic, the higher this velocity is and the greater V_w. Near the ground, this maximum value occurs in the neighborhood of V_w, particularly if the propeller is so dimensioned that V_w is as large as possible. The portion of the T curve in which $V < V_w$ is of little importance near the ground and

it may be assumed that climbing begins at V_w. From this instant, the T_u ordinate for V_w falls in the ratio μ_A, while the r ordinate also falls somewhat at first to r_o and then rises again slightly to the point of contact T_w. At the moment when r_o lies in the ordinate of V_w, the climb diminishes in proportion to μ_A, since r is invariable at this point. If the airplane rises exactly along the V_w line, the climbing velocity increases at first, somewhat more slowly than μ_A (on account of the course of the r curve), then exactly as μ_A, then more quickly than μ_A and, finally, near the ceiling where the curves are nearly parallel, in proportion to $\mu_A^{1.5}$. This is the exact climbing procedure, which scarcely differs from actual practice. It corresponds to the skill of the pilot in climbing with constant velocity. It is seen from this that the velocity must be V_w. If the pilot chooses a different speed at the start, he must approximate V_w again when high up.

The rule to be determined depends on the course of the r curve in the neighborhood of r_o. Since the weight decreases somewhat while climbing, in consequence of fuel consumption and since the curve is very flat at r_o, we may, for the sake of simplicity, regard the r curve in this region as horizontal (Fig. 16). The deviation from actual climb is thus very small and is only larger in the neighborhood of the ceiling, where the 1.5 power occurs and is not compensated correspondingly. In this region, none of the calculations are permissible, as they depend on too many factors and in practice, these figures are not necessary.

The simplification therefore yields correct values up to the practical ceiling.

Climbing at constant velocity V_W begins with $V_{\sigma(o)} = V_{T_u}(1 - \mu_W)$ and at the altitude A reaches

$$V_{\sigma(A)} = V_{T_u}(\mu_A - \mu_W), \tag{25}$$

and thus follows accurately the ordinate through V_W, which, on this account, may be designated the measure of climbing (Fig. 17). Its upper point is V_{T_u} and its lower point $\mu_W V_{T_u}$.

The integral of the climbing time is therefore

$$t = \int_o^{A_a} \frac{d\,A}{V_{T_u}(\mu_A - \mu_W)} \tag{26}$$

whence, with $d\,A = d\,\mu \frac{1}{\mu} \frac{1}{aN\,\cancel{0.9}}$

$$t = \frac{1}{V_{T_u}} \frac{143}{\mu_W} aN \frac{1 - \mu_W}{1 - \frac{\mu_W}{\mu_A}} \text{ min.} \tag{27}$$

The expression shows the climbing ability V_{T_u} as a prominent factor. The remaining part of the expression is an altitude which may be termed $A_{ap.}$, the apparent altitude

$$A_{ap.} = \frac{143}{\mu_W} \log \frac{1 - \mu_W}{1 - \frac{\mu_W}{\mu_A}} \tag{28}$$

The climbing time is to be calculated as if the airplane with the actual climbing ability V_r, had to reach the apparent altitude

$$t = \frac{A_{ap.}}{V_{T_u}} \tag{29}$$

The apparent altitude depends only on the required ceiling and the climbing characteristic, and can be read off from Table I. The other part V_{T_u}, of the formula contains all factors that can influence the climbing ability itself, such as horsepower, weight, efficiency, etc. The climbing time is obtained therefore by reading the apparent altitude in the table and dividing it by the effective climbing ability.

For the sake of completeness, it may also be mentioned that the climbing characteristics can be calculated with the help of the formula for the limiting velocity

$$V_{T_u} = T_{u_W} \quad V_W \tag{30}$$

from

$$\mu_W = \frac{r_o}{T_{u_W}} \tag{31}$$

with which the distribution of power during climbing can be readily checked.

The above rules for climbing procedure still need critical examination, for other suggestions have been made which differ considerably from them. From the above, the greatest climbing velocity, at the altitude A, is $V_{\sigma(A)} = V_{T_u}(\mu_A - \mu_W)$.
According to Everling, on the other hand, $V_{\sigma(A)} = V_{T_u}C(A - A_W)$ and according to Kann

$$V_{\sigma(A)} = V_{T_u}\left[\mu_A - \mu_W\left(\frac{\mu_W}{\mu_A}\right)^{\frac{1}{2}}\right]$$

Naturally, the climbing times according to these formulas are different and it would be best to choose those agreeing most accu-

rately with the true times. This would only lead, however, to a comparison of coefficients, while it is the task of the investigation to find the rule by which progress will be furthered. It is, therefore, necessary to ascertain which of these formulas differ least from the true relations.

As regards the standard of climb in which the successive altitudes and the curve of the logarithms of the air densities μ, are introduced (Fig. 18), it is found that, on replacing 0.89^A by A, the climbing velocity is greater near the ground, and smaller in the neighborhood of the ceiling than according to the proposed formulas. It is much more the case in Kann's formulas, as may be best seen from the thrust diagram (Fig. 19). For rising from the ground $V_{\sigma(o)} = V_{T_u}(1 - \mu^{1.5})$ according to Kann, but from the above formulas only $V_{\sigma(o)} = V_{T_u}(1 - \mu_w)$. In the diagram, the first expression is represented by the cross-hatched area, and it is obvious from the discussion of the available climbing ability that this area is too great by the amount of the double cross-hatched rectangle. The climbing time in the neighborhood of the ground is therefore much too small. It may be noticed that this formula yields correct values very near the ceiling with an index of 1.5, so that it must be said that the most accurate rule for climbing is given by

$$V_{\sigma(A)} = V_T \left[\mu_A - \mu_w \left(\frac{\mu_w}{\mu_A}\right)^{y}\right]$$

in which, near the ground the index, $y = -$ (0.05 to 0.03), as long as r falls, and when $r = r_o$ and $y = 0$, then y increases

very slowly, and finally, at the theoretical ceiling (after an infinitely long time), $y = +0.5$.

One is therefore justified in leaving $y = 0$ in the formula for climbing. This holds good for the practical ceiling and therefore covers the practical range.

SUMMARY.

The reciprocal of the weight per horsepower is a velocity, with which the engine is capable of raising the airplane vertically, and which provides a very obvious measure for the climbing ability of an airplane. In like manner, the power absorbed in gliding, is expressed as a velocity, so that the difference of these two velocities, the net balance, so to speak, gives the surplus available for climbing. The calculation, arranged in this way, enables us to survey all component forces and powers present during climbing and to represent them by thrust diagrams. It also permits simple expressions to be found for the climbing characteristic, climbing velocity, ceiling and ceiling velocity, from which lastly the climbing time may be computed by means of integration and can be represented by the ratio of apparent altitude to climbing ability.

Translated by
National Advisory Committee
for Aeronautics.

Table I. Apparent altitudes for different climbing characteristics.

Climbing characteristics	Altitude. 1000 m	2000 m	3000 m	4000 m	5000 m	6000 m	Ceiling
	Relative air density (Sea-level as 1)						
μ_w	0.894	0.804	0.715	0.637	0.568	0.505	m
85	192.44						1450
84	170.4						1560
83	153.2						1670
82	139.6						1775
81	128.0						1885
80	118.76	774.84					2000
79	110.8	493.6					2110
78	103.6	408					2230
77	97.2	348					2340
76	91.6	306.4					2460
75	86.76	274.64					2545
74	82.0	253.6					2700
73	78.4	234.0					2820
72	74.8	216.8					2940
71	71.6	202.0					3060
70	68.64	187.64	561.48				3180
69	66.0	177.2	454.0				3310
68	63.36	167.6	399.6				3440
67	60.96	158.4	360				3570
66	58.80	150.4	326.0				3700
65	56.72	143.16	304.40				3830
64	54.8	137.2	283.2				3960
63	52.8	131.2	265.2				4100
62	51.2	126.0	249.6				4240
61	49.72	121.2	236.8				4390
60	48.44	116.88	225.60	471.40			4530
59	46.96	112.8	214.2	426.4			4680
58	45.60	109.2	205.6	392			4830
57	44.40	105.6	196.8	363.2			4975
56	43.28	102.8	188.8	335.2			5130
55	42.24	98.96	180.84	318.96	664.44		5280
54	41.2	96	174.0	300.4	580.8		5440
53	40.32	93.2	167.6	284.8	527.2		5600
52	39.32	90.4	162.0	271.6	484		5750
51	38.4	88.0	156.4	259.6	450.0		5920
50	37.48	85.88	151.48	248.48	418.80	1086.92	6085
49	36.64	83.6	146.80	238.0	388.40	904	6265
48	35.84	81.2	142.4	229.2	368.40	792	6430
47	35.20	79.2	138.0	220.4	350.0	680	6610
46	34.40	77.72	134.0	212	333.2	592	6790
45	33.68	75.80	130.56	205.42	317.24	520.72	6980

Table I. Apparent altitudes for different climbing characteristics (Cont.)

Climbing characteristics	Altitude 1000 m	2000 m	3000 m	4000 m	5000 m	6000 m	Ceiling
	Relative air density (Sea-level as 1)						
μ_w	0.894	0.804	0.715	0.637	0.568	0.505	m
44	33.12	74.0	127.2	198.4	304	484.8	7170
43	32.40	72.4	124.0	192.4	290.8	454.0	7365
42	31.92	71.00	120.8	186.8	280.0	427.2	7560
41	31.20	69.6	118.0	181.6	269.2	404.8	7760
40	30.56	68.04	115.04	176.16	259.56	384.56	7970
39	30.00	66.8	112.20	171.60	250.8	367.6	8180
38	29.48	65.2	109.6	166.80	242.4	348.8	8400
37	28.96	64	107.2	162.40	234.8	336.8	8620
36	28.48	62.8	104.96	158.40	227.6	323.6	8840
35	28.00	61.64	102.76	154.36	220.96	311.56	9070
34	27.64	60.4	100.8	150.8	214.8	300.4	9300
33	27.24	59.36	98.8	147.2	209.2	290.4	9550
32	26.80	58.04	96.8	144.0	203.6	281.2	9810
31	26.28	57.2	94.2	140.8	198.4	272.8	10080
30	25.84	56.44	93.08	137.72	193.24	264.40	10350
29	25.44	55.40	91.6	134.8	188.4	256.4	10640
28	25.08	54.4	90.0	132.4	184	249.6	10920
27	24.68	53.6	88.4	129.80	179.6	242.8	11220
26	20.32	52.8	86.8	127.12	176	236.8	11520
25	23.96	51.96	84.96	124.36	171.92	230.48	11840
24	23.64	51.2	83.6	122.4	168.4	225.2	12160
23	23.32	50.4	82.0	120.0	164.8	220	12500
22	23.00	49.6	80.8	117.80	161.6	214.8	12850
21	22.68	48.88	79.6	115.6	158.20	209.6	13210
20	22.36	48.16	78.16	113.36	155.00	204.84	13580

Figs. 1,2,3.

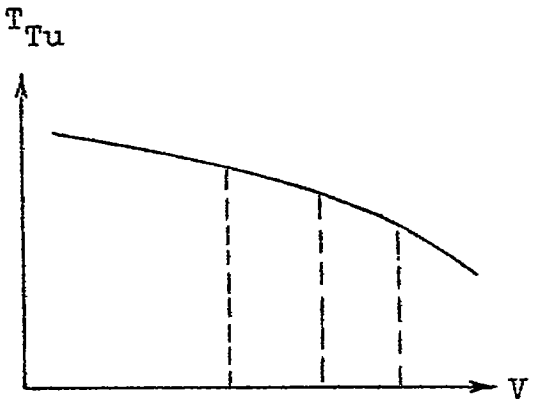

Fig.1 Propeller thrust.

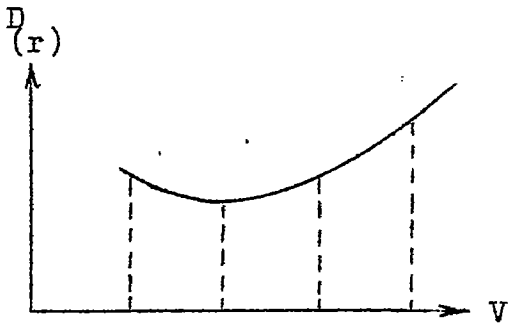

Fig. Thrust required.

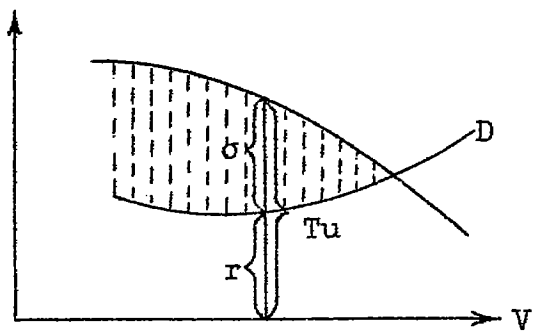

Fig.3 Thrust diagrahm.

Figs. 4,5,6.

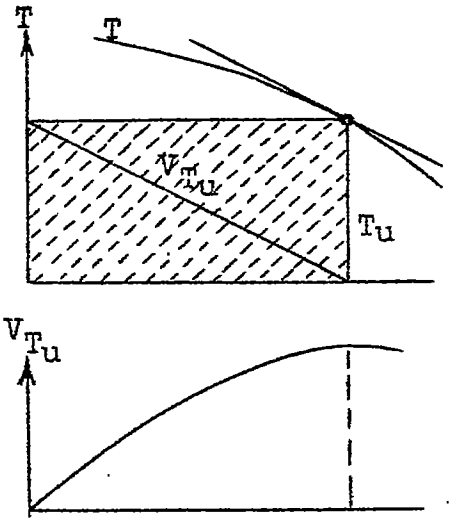

Fig.4 Effective climbing ability.

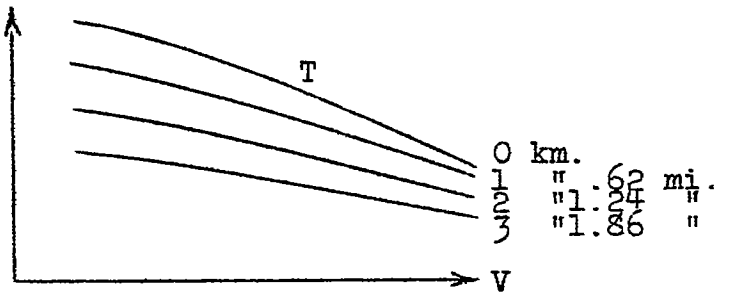

Fig,5 Decrease in effective climbing ability with increasing altitude.

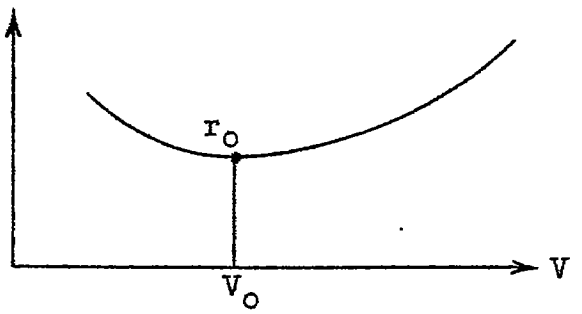

Fig.6 Minimum value of the gliding ratio and basic velocity.

Figs. 7,8,9.

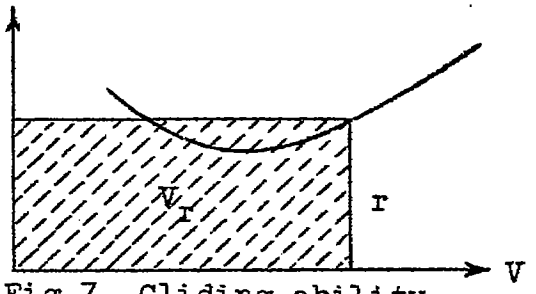

Fig.7 Gliding ability.

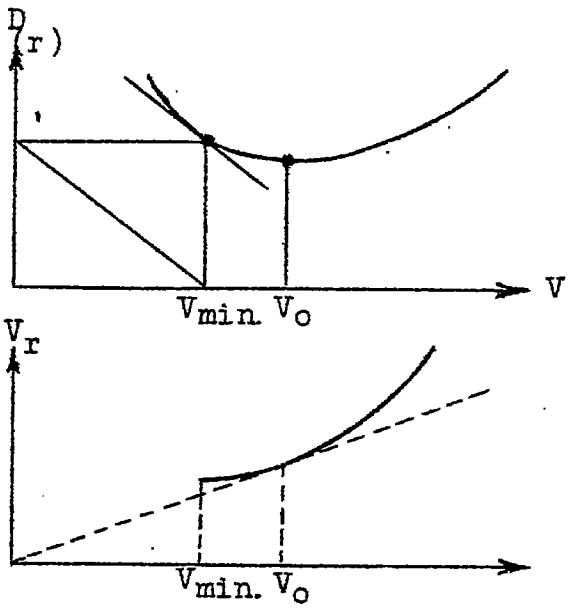

Fig.8 Minimum value of V_r

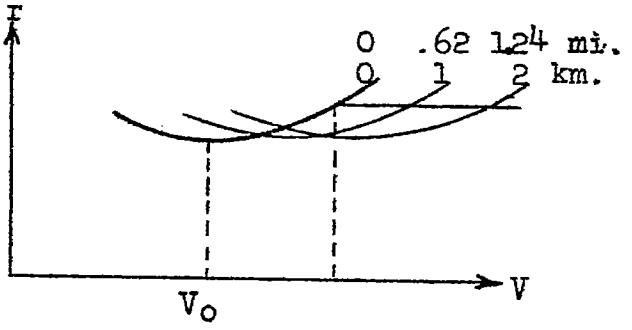

Fig.9 Curves of the thrust required at different altitudes.

Figs. 10,11,12.

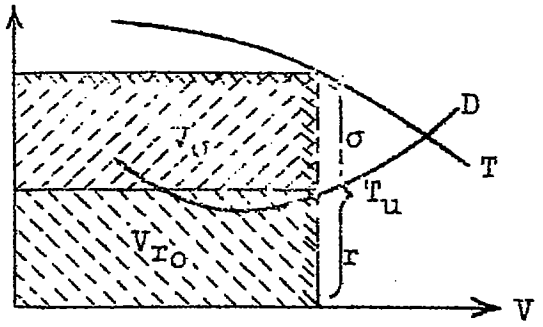

Fig.10

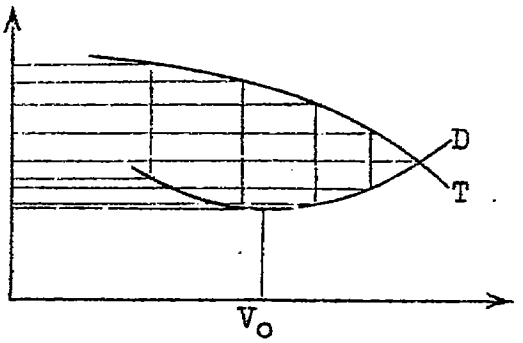

Fig.11 Dependence of available climbing ability on velocity.

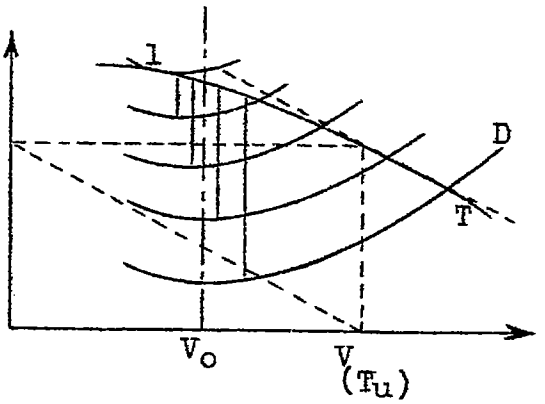

Fig.12 Variation in maximum value of available climbing ability with vertical displacement of the D curve.

Figs.13,14,15.

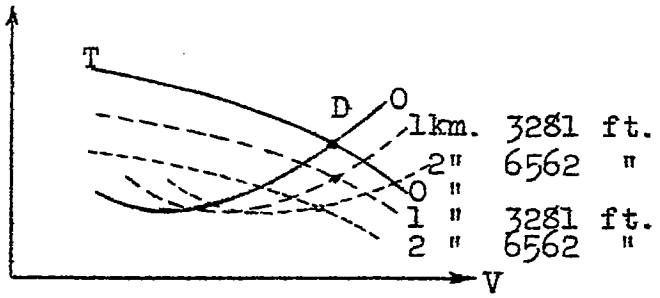

Fig.13 Diagram combining T and D curves for various altitudes.

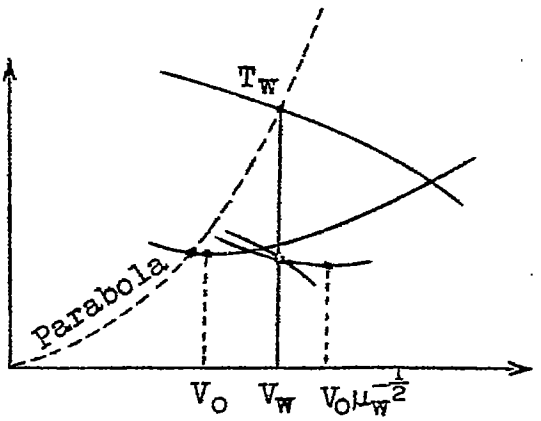

Fig.14 Limiting velocity.

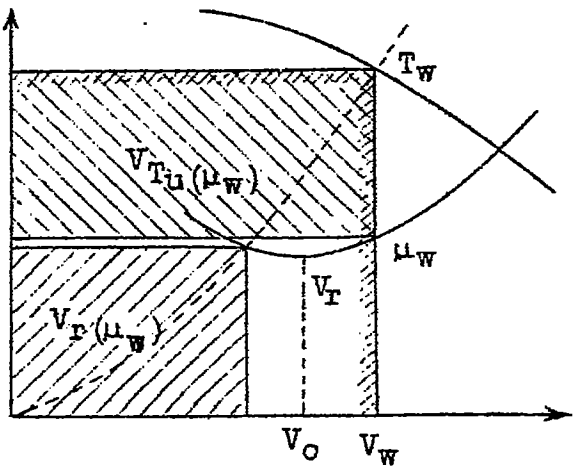

Fig.15 Procedure during climb.

Figs. 16,17,18,19.

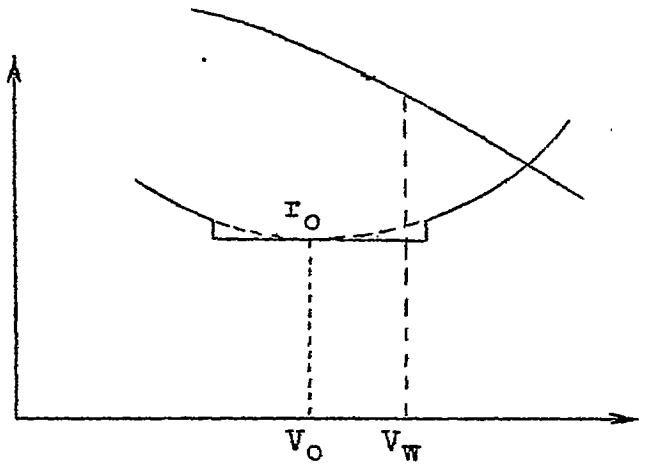

Fig.16 Simplification of the r curve in the vicinity of r_o.

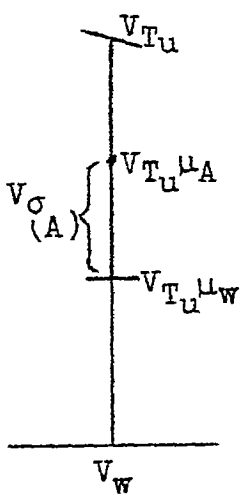

Fig.17 Measure of climbing.

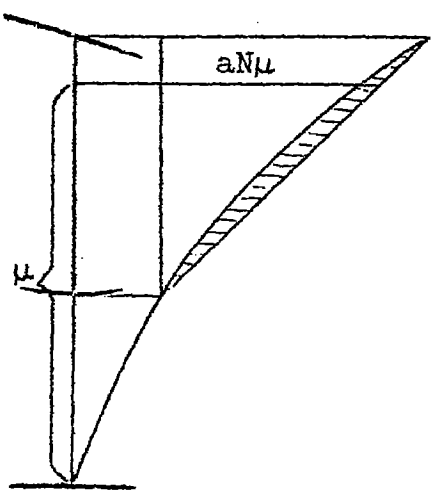

Fig.18 Proof of the measure of climbing.

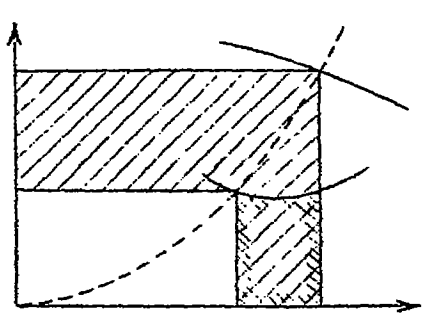

Fig.19 Comparison with the climbing formula of Kann.