NATIONAL ADVISORY COMMITTEE
FOR AERONAUTICS
MAILED
TO: Mr. Truscott

TECHNICAL NOTES

NATIONAL ADVISORY COMMITTEE FOR AERONAUTICS.

No. 157

AN IMPULSE ELECTRIC MOTOR FOR DRIVING RECORDING INSTRUMENTS.

By W. F. Joachim,
Langley Memorial Aeronautical Laboratory.

Taken from "Journal of the Franklin Institute,"
August, 1923.

September, 1923.

NATIONAL ADVISORY COMMITTEE FOR AERONAUTICS.

TECHNICAL NOTE NO. 157.

AN IMPULSE ELECTRIC MOTOR FOR DRIVING RECORDING INSTRUMENTS.*

By W. F. Joachim.

Summary.

The chief purpose in undertaking the development of this synchronous motor was the creation of a very small, compact power source, capable of driving the film drums of the recording aircraft instruments designed by the staff of the National Advisory Committee for Aeronautics.

The working parts of the motor are few and simple. They consist of four spool type field coils, a reciprocating armature, a ratchet wheel and two pawls. The field coils, operating in pairs, alternately pull the armature from one pair of pole faces to the other pair. This reciprocating motion is transmitted to the ratchet wheel through the two pawls, motion in either direction producing a positive advance of the wheel. Rotation of a very regular character is thus secured.

The motor is 1 3/8 inches long, 1 3/16 inches wide and 7/8 inch high, with a volume of 1.43 cubuc inches, and a weight of .165 pound (75 gms.). It produces approximately 6.0×10^{-5} HP, with an efficiency of 1.0 per cent. The speed range is from

*Taken from "Journal of the Franklin Institute," August, 1923. Communicated by Dr. Joseph S. Ames, Director, Office of Aeronautical Intelligence, National Advisory Committee for Aeronautics, and Associate Editor of this Journal.

0 to 35 R.P.M., the torque being .234 pound-inch (269.6 g.-cm.) at the lower speeds with 8 volts applied.

Due to its small size and light weight, its inherent slow speed and property of absolute synchronization, the motor is particularly well adapted to aircraft instrument work. Application of this type of power source may also be made to automatic recording instruments of all kinds, to indicating devices requiring absolute precision of movement, and to remote control work.

Introduction.

The specific problem which was responsible for the development of this direct current synchronous motor, was that of driving the film drum of an instrument called the sun kymograph.

The requirements of this instrument are four-fold: First, the drive must be slow speed; second, the rotation must be uniform and regular; third, the part of the drive attached to the instrument must be small, compact and light in weight; and fourth, the connecting link between the instrument and airplane must be flexible.

To meet these requirements three forms of mechanical drives, and two types of small electric motors were investigated and tried.

Methods and Apparatus.

The mechanical drives investigated consisted of flexible cables which received their power from a constant speed motor mounted on the floor of the airplane. These cables drove the kymograph film

drum through a small clutch attached to the instrument.

The three forms consisted, first, of a solid wire enclosed in a flexible housing; second, of a standard Van Sicklen tachometer cable and housing, and third, of a double opposed spring cable (Van Sicklen), without a housing, but guided at intervals by rings.

The results obtained with these drives were unsatisfactory. Due to the slow speed required, which caused a spasmodic sticking and releasing of the cable within its housing or guiding rings, all three types imparted a very irregular rotation to the film drum. The flexibility of these drives was also inadequate for the work involved.

The first type of electric drive investigated was a low-frequency alternating-current motor. This was built very much like a standard direct-current telephone relay. It depended for its action on the cyclic attraction of a small laminated bar armature to and from a pair of spool type coil magnets. A spring pawl transmitted the reciprocating motion of the armature to a ratchet wheel.

A second form of alternating current motor, similar in construction and principle to the polarized relay or the alternating current bell ringer, was also investigated. As in the first form of this type of motor, a pawl transmitted the oscillating motion of the armature to a ratchet wheel.

Both of these motors operated fairly well with very light loads. But a load equal to that of a film drum retarded the armature sufficiently to destroy the synchronism between armature and magnetic flux.

In the second form of motor, it was particularly noticed that the frequency of the alternating current had to coincide exactly with the natural period of the oscillating parts for the motor to function. Also the starting torque of the motor was very low, and the efficiency of both motors was less than one-twenty-fifth of one percent. Hence these two electric drives were also inadequate and unsatisfactory.

The second and successful type of electric drive investigated was built much like a standard telephone relay, but had double opposed electromagnets. These alternately pulled the armature from one pair of pole faces to the other. This reciprocating motion was transmitted to the ratchet wheel through a pawl, power being directly imparted in only one direction.

This form of motor gave a somewhat intermittent rotation, there being sixty separate impulses for one revolution of the ratchet wheel.

The final form of the motor, however, utilizes the motion of the armature in either direction to give a positive advance to the wheel. This was accomplished by two pawls acting on opposite sides of the ratchet wheel as shown in Figs. 1 and 2. The rotation secured in this manner is very regular, there being 480 continuous and connected power strokes for one revolution of the wheel.

Since it may not be fully apparent, from the foregoing brief description, how a reciprocating armature can impart definite unidirectional power strokes to a ratchet wheel a detailed description of the operation follows.

Referring to Fig 2, it will be seen that the ratchet wheel rotates about a vertical axis passing through the center of the motor; also that it lies above the field poles and reciprocating armature, and between the two pawls, which latter are mounted in brackets at either end of the armature. The armature is supported by two leaf springs fixed in the base and is returned by these springs from either pair of pole faces to a neutral position half-way between them.

The moving parts of the motor consist of the armature, the two pawls and the ratchet wheel. There are no connecting rods or bell cranks.

Assuming now the left electromagnet to be energized, the action from the neutral position is as follows:

The armature is pulled to the left until it reaches the pole faces of the left electromagnet. During this motion, pawl A has rotated the wheel clockwise one-quarter of a tooth. At the same time pawl B has ratcheted back in a counter-clockwise direction one-quarter of a tooth and has dropped into position behind the tooth over which it has just moved. The armature is now in position for a complete power stroke from left to right.

Assuming the left electromagnet to be de-energized, the armature springs start to return the armature to the neutral position. This action does not rotate the wheel under load but serves only to take up the slight play between pawl B and the three teeth of the wheel on which it is now exerting some pressure.

Approximately one-sixtieth of a second elapses during the above action, after which the right electromagnet is energized.

The armature is now pulled to the right until it reaches the pole faces of the right electromagnet. During this motion pawl B rotates the wheel clockwise, as before, one-half a tooth. At the same time pawl A is ratcheted counter-clockwise also a half tooth. Since the wheel has been rotated clockwise a half tooth and pawl A moved counter-clockwise a half tooth, it will be seen that the relative motion between the two is equal to a whole tooth.

Therefore, pawl A drops into position behind the tooth over which it has just moved. Thus the power stroke has been completed and the armature brought into position for the following stroke from right to left.

The sequence of operations from right to left are exactly the same as those from left to right with the one exception that pawl A now rotates the wheel, while pawl B ratchets into position over another tooth. Hence the power strokes proceed from right to left and from left to right, the wheel always being rotated clockwise.

Since it requires two strokes of the armature to move the wheel one tooth, and since the wheel has 240 teeth, it requires 480 power strokes to rotate the wheel one complete revolution. Hence the inherent slow speed of the motor.

The maximum air gap required in this motor between the armature and either pair of pole faces is very small, actually about

.008 inch. This gap varies in operation from .008 inch to zero, so that the average gap is only .004 inch. Hence the efficiency of the magnetic circuit is high. This is accomplished by using ratchet teeth of small pitch, and by the fact that a complete power stroke requires an air gap of only one-half the tooth pitch.

Referring to Fig. 3, it will be seen that the magnetic pull between two plane surfaces which are separated by small air gaps is neither inversely proportional to the gap nor to the square of the gap, but follows a law of the following form: $F = C - C_1 X + C_2 X^2 - C_3 X^3 +$. In this equation F is the magnetic force or pull; C, C_1, C_2 and C_3 are constants determined by the size and shape of the poles faces and by the total magnetic flux; and X is the gap between magnet and armature.

It was found that the magnetic pull in this motor at zero gap was 1150 grams (2.54 lbs.) and at .008 inch gap, 550 grams (1.21 lbs.). The armature springs therefore were designed to equalize this varying magnetic force so as to give a pull of 850 grams (1.87 lbs.) throughout the whole power stroke. Thus the springs store 3.05 cm.-g. (.00264 in.-lb.) of energy during the last half of each power stroke and return it during the first half of the following power stroke.

The alternate energizing and de-energizing of the left and right electromagnets is accomplished by a distributor driven by a constant speed motor in an average case at about 720 R.P.M. This distributor makes and breaks the electric circuit for each electromagnet of the motor once for each revolution. Hence at 720 R.P.M.

of the distributor the motor armature has transmitted 1440 power strokes to the ratchet wheel, thus producing a motor speed of three revolutions per minute. This speed is readily controlled so that a range of from zero to 16,800 power strokes per minute may be realized. This gives a motor speed range of from zero to 35 R.P.M.

By the use of this method of commutation, and speed control, it will be seen that absolute synchronism between any number of motors is readily obtained by merely taking their current supply from the same distributor. Thus any number of instruments may not only be operated in absolute synchronism with each other, but, if the distributor be chronometrically controlled, absolute speed regulation and timing may also be realized.

The performance of the motor in a complete laboratory test proved entirely satisfactory. This test was conducted to determine, first, the complete speed range; second, the maximum torques; third, the effect of varying the distributor-commutator time-contact ratios; and fourth, the current consumed under the different conditions.

The time-contact ratio, as here used, means the ratio of the time the motor is cut in circuit to the time the motor is cut out of circuit. The time-contact ratio is taken over two complete power strokes or one revolution of the distributor-commutator. This is also called a cycle and the amount of actual contact is determined by the number of degrees of commutation per cycle.

It will be readily understood that to obtain the best efficiency from the motor, the current supplied through the distributor-commutator should be cut out the instant the armature has completed

its power stroke. In order to accomplish this result, without any complication, the correct length of the distributor-commutator segment, which makes and breaks the circuit and thus produces a power stroke, was determined in this test for all speeds and torques.

The data obtained are tabulated in Table I. Curves showing the torques in gram-centimeters, speeds, degrees of commutation, efficiencies, current consumed in amperes, horsepowers and the number of armature reciprocations per minute are plotted on curve sheet Fig. 4.

Thus, following the dotted lines, starting at 10 or 20 R.P.M., we may find the other characteristics of the motor for any specific number of degrees of commutation per cycle.

R.P.M.	10	20
Degrees of commutation per cycle	90°	270°
Torque	138	179
Efficiency	0.91%	0.92%
Current amperes	0.20	0.50
Horsepower	1.8×10^{-5}	4.9×10^{-5}
Armature reciprocation per minute,	4800	9600

Results.

The new type of power source for aircraft instruments has the following specifications:

(1) Size: Length, 1 3/8" (3.49 cm); width 1 3/16" (3.02 cm); height, 7/8" (2.22 cm).

(2) Weight: 75 gms.

(3) Speed range: 0 to 35 R.P.M.

(4) Current consumption: 0.1 to 0.9 amperes at 8 volts.

(5) Torque (max.): 269.6 g.-cm.

(6) Power (max.): 6×10^{-5} HP.

(7) Efficiency (max.): .99 per cent.

As it may be interesting to compare the impulse motor with the D.C. governed series motor (Fig. 5) now used in the instruments of the committee, the following table is attached:

Size: 2.5" (6.35 cm)× 2.5" (6.35 cm)× 4.2" (10.67 cm).

Weight: 750 gms.

Speed range: 500 - 2500 R.P.M.

Current consumption: Normal, 1.75 amps. at 8 volts.

Current consumption: Starting, 10.5 amps. at 8 volts.

Power (max.) at 1080 R.P.M. = .0051 HP.

Power (max.) at 1790 R.P.M. = .0054 HP.

Efficiency at 1080 R.P.M. = 12.7 per cent.

Efficiency at 1790 R.P.M. = 18.8 per cent.

Torque required to turn standard film drum with no reduction gearing varies from 27 g.-cm. to 270 g.-cm.

Efficiency of combined system of this type of motor and gearing when driving a good drum = .007 per cent.

The advantages of the impulse type of motor for instrument work are:

(1) Size and shape permit easy installation in the instrument base, thus providing space for additional apparatus, or making possible a material reduction in the size of the instrument. Its volume is 1.43 cubic inches.

(2) Light weight.

(3) Inherent low speed.

(4) Low current consumption, thus decreasing the number of storage batteries necessary for average flight work to approximately 40 per cent of the present requirement.

(5) Constant torque at the speed range used.

(6) High efficiency for its size.

(7) Absolute synchronism of zero speed variation between any number of like motors.

(8) Normal speed instantaneously on closing the switch.

(9) Dead stop instantaneously on opening the switch.

(10) Remote control of speed of all motors in operation from the distributing source.

(11) Long life due to low-bearing pressures. (1) Pawl-bearing pressure 300 lbs/sq.in. (2) Main-bearing pressure 12 lbs/sq.in.

(12) Low construction cost due to: (1) Few parts; (2) spool type coils; (3) elimination of rotating contacts and brushes.

Table I.

Direct Current Synchronous Motor Performance Data.

Torque in G.-Cm.	Degrees of Commutation per Cycle.							
	45°		90°		135°		180°	
	P.S.	Amp.	P.S.	Amp.	P.S.	Amp.	P.S.	Amp.
265	0	.131	0	.263	0	.394	0	.523
232.6	.....	....	.....	....	.....	....	.....	....
200.5	1,600	.130	3,200	.24	4,200	.33	5,100	.41
174.6	1,800	.115	4,100	.22	5,140	.30	6,400	.38
135.8	2,400	.11	4,900	.19	6,600	.27	8,000	.33
103.5	2,900	.10	5,700	.175	7,800	.24	9,300	.31
84.1	3,060	.09	6,300	.17	8,700	.23	11,000	.29
64.7	3,500	.08	7,400	.155	9,600	.20	12,400	.25
45.25	.....	.....	8,400	.15	10,780	.18	.....	...
32.16	4,800	.075	.....	....	.....	....	.....	...
0.00	7,000	.06	12,400	.10	14,000	.16	15,100	.19

P.S. = Power strokes per minute.
Amp. = Current consumed at 8 volts.

Table I (Cont.)

Direct Current Synchronous Motor Performance Data.

Torque in G.-Cm.	Degrees of Commutation per Cycle.					
	225°		270°		315°	
	P.S.	Amp.	P.S.	Amp.	P.S.	Amp.
265	0	.656	0	.788	0	.919
232.6	.....	....	5,400	.67	6,600	.69
200.5	6,000	.49	8,920	.53	10,500	.57
174.6	7,920	.45	.....	....	.....	...
135.8	8,800	.41	10,800	.49	12,500	.51
103.5	11,000	.34	12,000	.42	.....	....
84.1	.....	....	.....	....	.....	....
64.7	12,400	.32	13,800	.39	14,800	.42
45.25	.....	....	.....	....	.....	....
32.16	.....	....	.....	....	.....	....
0.00	16,200	.23	16,800	.29	17,000	.36

P.S. = Power strokes per minute.
Amp. = Current consumed at 8 volts.

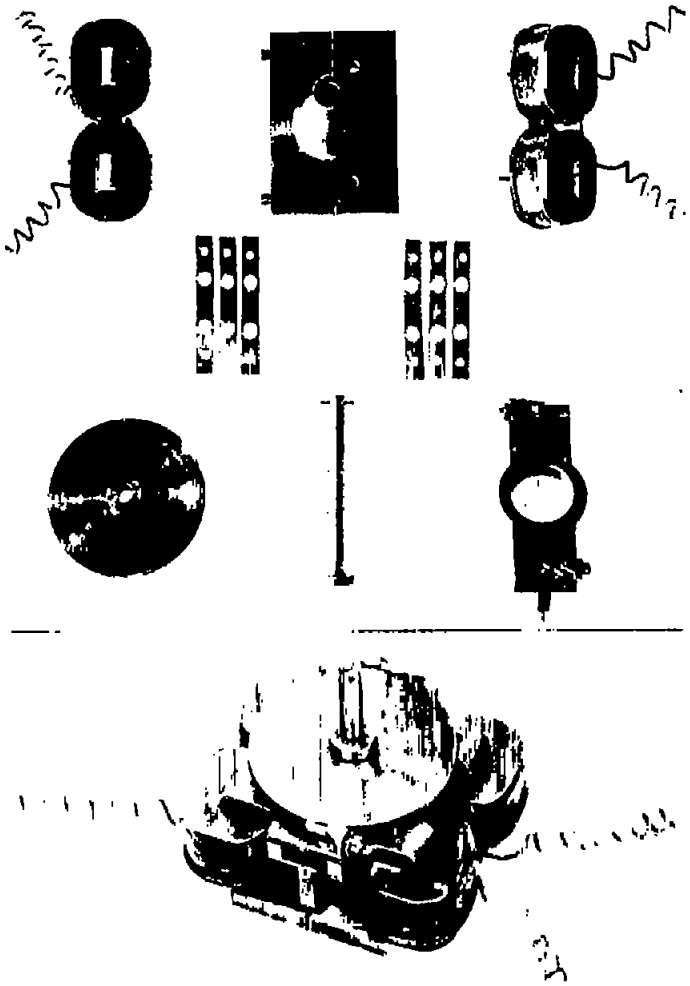

Fig. 1 Details and Assembly of direct current synchronous motor.

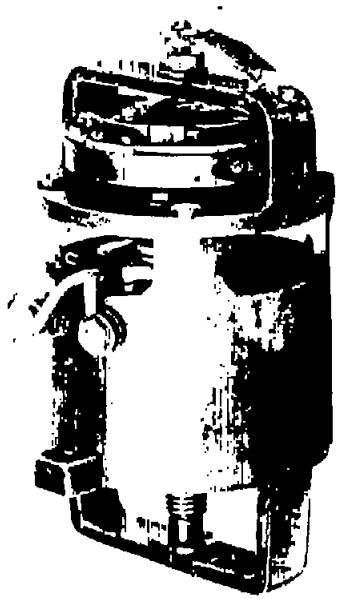

Fig. 5 Direct current governed series motor now used in instruments

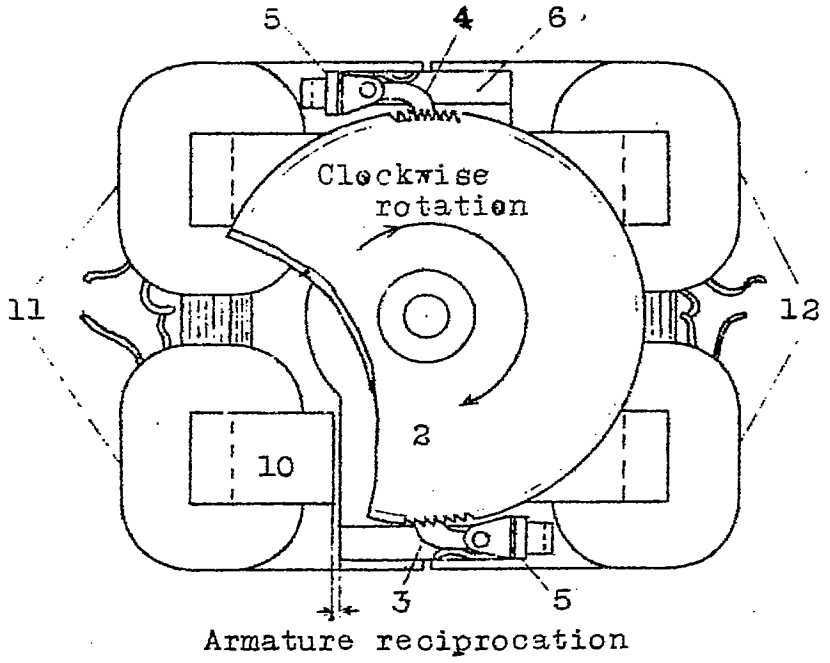

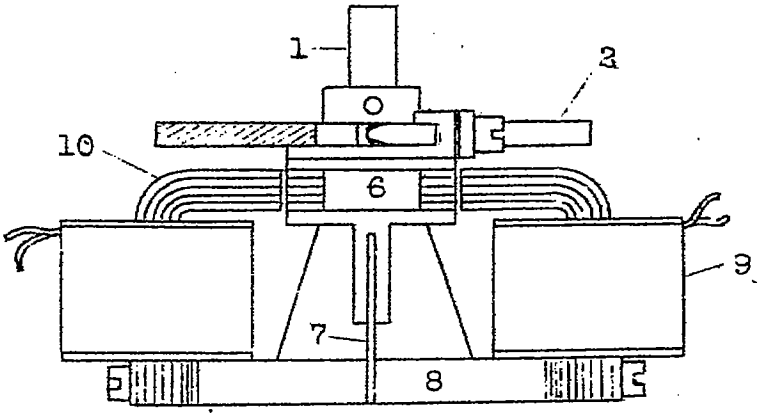

1	Vertical shaft	7	Armature springs
2	Ratchet wheel	8	Base
3	Pawl "A"	9	Field coils
4	Pawl "B"	10	Field poles
5	Pawl brackets	11	Left electromagnet
6	Armature	12	Right "

Fig.2 Diagrammatic drawing of direct current synchronous motor.

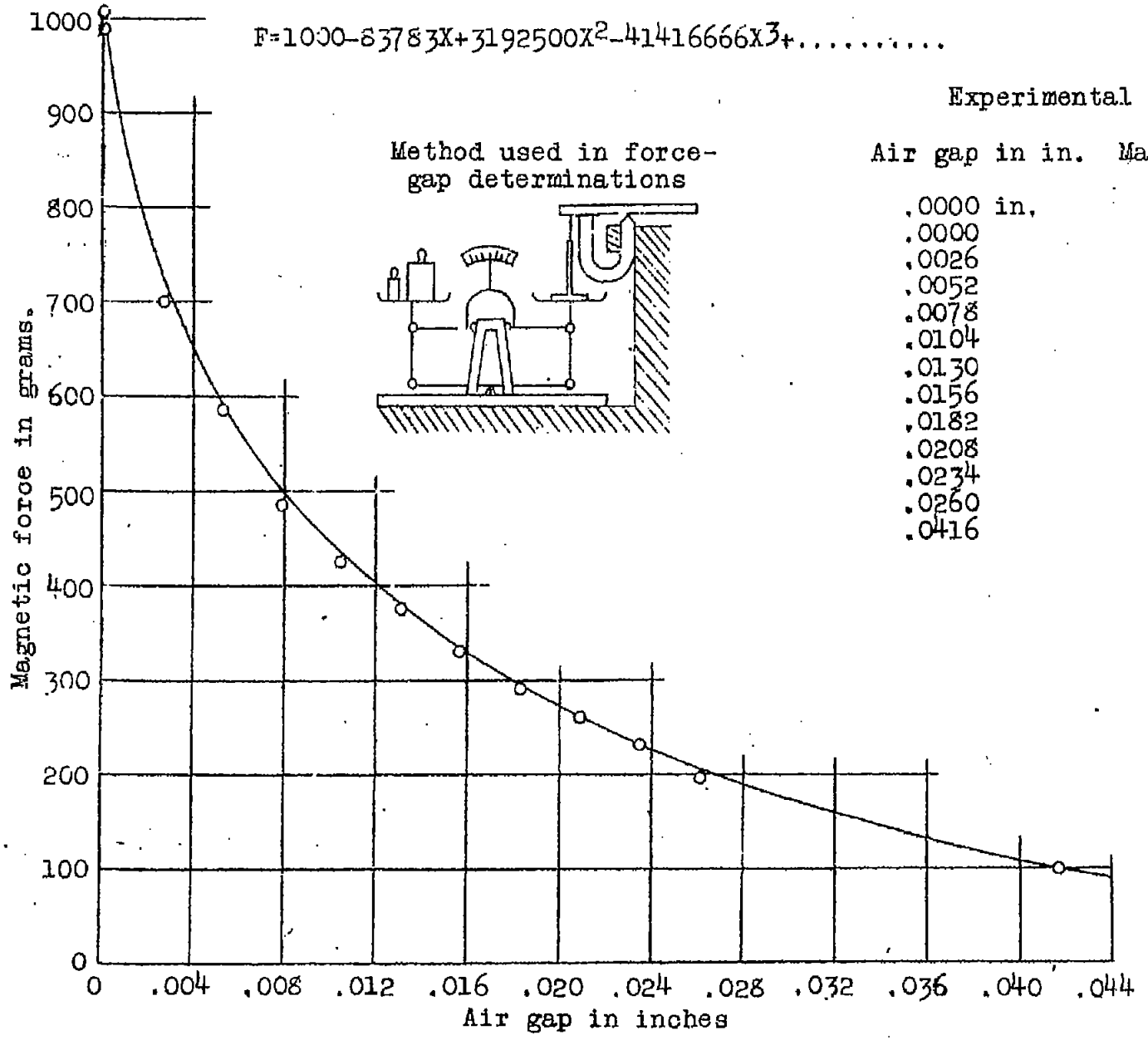

Experimental data

Air gap in in.	Magnetic force
.0000 in.	1010 g.
.0000	990
.0026	700
.0052	585
.0078	485
.0104	425
.0130	375
.0156	330
.0182	290
.0208	260
.0234	230
.0260	195
.0416	95

Fig. 3 Magnetic force variation for small air gaps

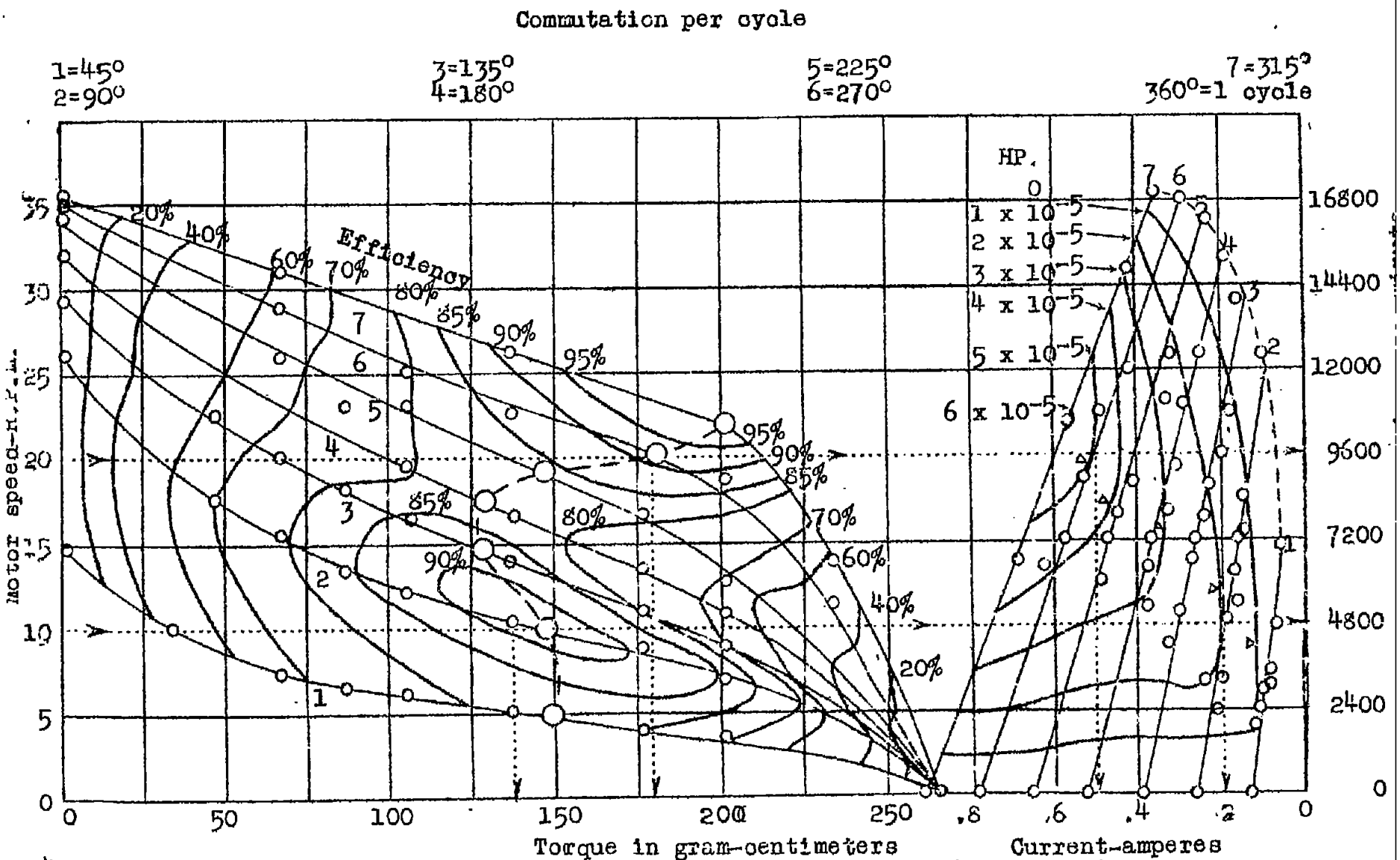

Fig.4 Performance chart of type "B" direct current synchronous motor