NATIONAL ADVISORY COMMITTEE
FOR AERONAUTICS

JAN 7 1924
MAILED

TO: M. Truscott

TECHNICAL NOTES

NATIONAL ADVISOEY COMMITTEE FOR AERONAUTICS.

No. 174

AIRPLANES IN HORIZONTAL CURVILINEAR FLIGHT.

By Heinrich Kann.

From Technische Berichte, Volume III, No.7.

January, 1924.

NATIONAL ADVISORY COMMITTEE FOR AERONAUTICS.

TECHNICAL NOTE NO. 174.

AIRPLANES IN HORIZONTAL CURVILINEAR FLIGHT.*

By Heinrich Kann.

War airplanes require not only high speed and the ability to climb rapidly, but also the ability to traverse sharp curves quickly. An attempt is made, in the following note, to give a simple method of calculating horizontal curvilinear flight. A method for determining the area of the aileron and rudder surfaces will also be indicated. The following discussion applies primarily to single and two-seater airplanes, although it can be extended to larger airplanes.

Horizontal Curvilinear Flight.- Two conditions must be distinguished in connection with flight on a horizontal turn, viz., circular and spiral flight. While circular flight can be maintained continuously, spiral flight forms a transition between two circular flights. Between rectilinear flight, which may be considered as flight in a circle of infinite radius, and the smallest circle in which the airplane can fly, circular flights of any desired radius can be flown. The most important equilibrium condition to be observed, in connection with flight in a circle, is that the air resistance must be overcome by the propeller thrust..

* From Technische Berichte, Volume III, No.7, pp. 260-267. (1918).

The resultant R (of the weight W and the horizontal centrifugal force F at right angles to W) acts outward against the lift L (Fig. 1). This resultant, as well as the lift, must be at right angles to the supporting surfaces. This is only possible when the airplane is banked in the turn. The angle of bank is determined by the magnitude of the centrifugal force, which, in turn, depends on the speed of the airplane and the radius of the flight curve.

The rudder and ailerons are used to maintain equilibrium in the turn. The action of the forces and the primary conditions of equilibrium will be explained later. It is only nesessary to observe here that the total resistance or drag of the airplane is increased by the deflection of the control surfaces. In the case of combat airplanes, where turning is of special importance, this increase, however, is very slight. The increase in airplane resistance may, therefore, be disregarded and attention concentrated on the calculation of the forces, the inclination of the airplane and the radius of the turn.

The following symbols will be used:

S Area of supporting surface in square meters;

W Flying weight of airplane in kilograms;

P Output of engine in HP;

R Resultant, in kilograms, of weight and centrifugal force;

F Centrifugal force in kilograms;

b Span in meters;

C_L Lift coefficient of airplane for angle of attack α;

C_D Drag coefficient of airplane for angle of attack α;

e Eccentricity, in meters, of the resultant of the air forces with respect to the center of gravity of the airplane (i.e., the perpendicular distance between the lines R and L in Fig. 1);

g Acceleration due to gravity = 9.81 m/sec²;

N Speed of engine in revolutions per minute (R.P.M.);

t Time in seconds required for completing a circular flight;

V Velocity in meters per second;

A Altitude of flight in meters;

α Angle of attack in degrees;

τ Angle of inclination of the airplane in degrees (Fig. 1);

σ Specific gravity of air in kilograms per cubic meter;

η Mean efficiency of propeller (including gearing);

r Radius, in meters, of the circle flown.

The index o will be used for values at the ground level and the index g at ceiling altitude. The values at altitudes where the airplane flies horizontally in a straight line with the angle of attack α are designated by the index α.

The conditions of equilibrium, when flying in horizontal curves, are as follows:

$$R = C_L \frac{\sigma}{2g} S V^2 \tag{1}$$

$$\frac{75 P \eta}{V} = C_D \frac{\sigma}{2g} S V^2 \tag{2}$$

It is assumed that an ordinary gasoline engine is used with an output proportional to the density of the air.

Thus, $P = P_o \frac{\sigma}{\sigma_o}$ (3)

If this value is introduced into equation (2), the velocity along the curve becomes

$$V = \sqrt[3]{\frac{75\ P_o\ \eta}{C_D\ \frac{\sigma}{2g}\ S}} \qquad (4)$$

The coefficient of drag C_D, only depends on the angle of attack at which the curve is flown. The velocity, therefore, depends only on the angle of attack α and is independent of the altitude at which the curve is flown. It corresponds to the velocity in straight horizontal flight with the same angle of attack α at the altitude A_α.

The resultant force R can be calculated from equation (1). Here the value of V is still unknown; but if the value given in equation (4) is inserted, then

$$R = C_L\ \frac{\sigma}{2g}\ S \sqrt[3]{\left(\frac{75\ P_o\ \eta}{C_D\ \frac{\sigma_o}{2g}\ S}\right)^2} \qquad \text{or,}$$

$$R = \frac{\sqrt[3]{\frac{C_L^3}{C_D^2}\ (75\ P_o\ \eta)^2\ \frac{\sigma_o}{2g}\ S}}{\frac{\sigma_o}{\sigma}} \qquad (5)$$

For flight in a straight line at the altitude A_α, with the same angle of attack α, equation (1) must be replaced by

$$W = C_L\ \frac{\sigma_\alpha}{2g}\ S\ V^2 \qquad (6)^*$$

---

* See also Kann, "Climbing Ability of Airplanes," Technische Berichte, Volume I, No.6, p.231.

and, after inserting the value V from equation (4),

$$W = \frac{\sqrt[3]{\frac{\bar{C}_L^{\,3}}{C_D^{\,2}} (75\, P_o\, \eta)^3 \frac{\sigma_o}{2g} S}}{\frac{\sigma_o}{\sigma_\alpha}} \tag{7}$$

From equations (5) and (7) we get

$$\frac{R}{W} = \frac{\sigma}{\sigma_\alpha} \quad \text{or} \quad R = W \frac{\sigma}{\sigma_\alpha} \tag{8}$$

This simple expression shows that the resultant force R increases with increasing departure from the altitude A_α. Near the ground level, which is the maximum distance from the altitude A_α, and with the angle of attack α, we obtain the maximum value, $R = W \frac{\sigma_o}{\sigma_\alpha}$.

At the altitude A_α, where, with the angle of attack α, it is only possible to fly in a straight line, $R_\alpha = W$. Equation (8) shows further that R increases as the density of the air, $\frac{\sigma_\alpha}{g}$, decreases or the altitude A_α increases. If the curve is flown with the angle of attack at which the ceiling is reached $(\sigma_\alpha = \sigma_g)$, then the value of the resultant force becomes $R = W \frac{\sigma}{\sigma_g}$ and the maximum value of R is finally obtained when flying in a circle close to the ground with the same angle of attack as at the ceiling.

$$R_{max} = W \frac{\sigma_o}{\sigma_g} \tag{9}$$

This value must be considered when calculating the strength of an airplane in curved flight. Figure 2 shows the ratio $R : W$ plotted against the distance below the ceiling.

The relation between altitude and atmospheric density, which

varies with the season and the weather, corresponds to the approximate formula:

$$A = 21850 \log \frac{\sigma}{\sigma_g} \tag{10}$$

Figure 2 shows that the resultant force R, at a distace, for example, of 3860 m below the ceiling, is 1.5 times and, at a distance of 6560 m, is twice the weight of the airplane. As the altitude increases, the demands made on the strength of the airplane in curving flight also increases.

The centrifugal force F always acts at right angles to the force of gravity in horizontal curvilinear flight. Since the resultant force R is known, F can be calculated by using the the value of R obtained from equation (8).

$$F = \sqrt{R^2 - W^2} = W\sqrt{\left(\frac{\sigma}{\sigma_\alpha}\right)^2 - 1} \tag{11}$$

The angle of bank φ in the turn is found according to Fig. 1 from

$$\tan \varphi = \frac{F}{W} \sqrt{\left(\frac{\sigma}{\sigma_\alpha}\right)^2 - 1} \tag{12}$$

The bank of the airplane, in horizontal curvilinear flight, depends on the angle of attack and the distance below the altitude at which rectilinear flight is possible with the same angle of attack. The bank attains a maximum in flight near the ground with the same angle of attack as at the ceiling (Fig. 2). An airplane, for instance, that can reach a ceiling of 7000 m (22966 ft), has a maximum bank of 61.3° when flying in a turn near the ground.

From the equation for the centrifugal force

$$F = \frac{W}{g}\frac{V^2}{r} \tag{13}$$

is found the radius of the circle flown

$$r = \frac{W}{g}\frac{V^2}{F} = \frac{V^2}{g\sqrt{(\sigma/\sigma_\alpha)^2 - 1}} \tag{14}$$

by inserting the value of F from equation (11).

The radius, therefore, attains its minimum value near the ground for every angle of attack where $\sigma = \sigma_o$. At the altitude $A\alpha$ where rectilinear flight is possible, $\sigma = \sigma_\alpha$ and, according to equation (14), $r = \infty$. The radius of the circle can, therefore, be diminished as the ceiling to which the airplane can climb increases and as its speed decreases under these conditions. The conditions for this are: light weight per HP, good propeller efficiency, good aspect ratio (because the expression C_L^3/C_D^2 on which the ceiling depends, thus becomes large) and lastly, a large supporting surface in proportion to the power and the weight. This is most easily attained with multiplanes. Flight in sharp turns is generally much more readily attained with biplanes or triplanes than with monoplanes. A higher value of C_L^3/C_D^2 and a higher propeller efficiency in monoplanes tend, however, to enable even the monoplane to fly in sharp turns.

The chief point, however, is not to fly in the smallest possible circle, but to complete a circle in the shortest possible time. The time in which a circle can be completed is found by

using equation (14)

$$t = \frac{2\pi r}{V} = \frac{2\pi V}{g\sqrt{(\sigma/\sigma_\alpha)^2 - 1}} \qquad (15)$$

The speed has less effect on the time required for completing a circle than it has on the radius. Short periods of time are obtained when σ_α is small and when the airplane can reach high altitudes, i.e., has good climbing ability. An airplane that climbs well can, therefore, make a small circle in a short space of time.

Variations of radius and time for completing a circle, with variations in the angle of attack, were determined on the D IV airplane of the Siemens-Schuckert Works. The following characteristics of this airplane are needed for the computation.

Weight during flight	700 kg (1543 lb)
Engine power	200 HP
Area of supporting surfaces	15.2 m^2 (163.6 ft^2)
Mean propeller efficiency	0.70

The coefficients C_D and C_L^3/C_D^2 are given in Figure 3.

With the above data, the atmospheric density $\frac{\sigma_\alpha}{g}$, is found from

$$\frac{\sigma_o}{\sigma_\alpha} = \sqrt[3]{\frac{\frac{C_L^3}{C_D^2}\, 358\, \eta^2}{(W/P_o)^2\, W/S}} \qquad (16)$$

and the approximate altitude from

$$A_\alpha = 21850 \log \frac{\sigma_o}{\sigma_\alpha} \qquad (17)$$

The velocity is calculated from equation (4), the radii from equation (14) and the time required for completing the flight circle from equation (15). The radii and time were plotted in Figures 4 and 5 against the angle of attack at various altitudes. The radii were also plotted in Figure 6 against the altitude at various angles of attack. As follows from Figure 4, the smallest circle was obtained close to the ground, with an angle of attack of 14°. With increasing altitude the angle of attack approaches the value of 12°, for which C_L^2/C_D^2 has a maximum value (Fig. 3). Figure 5 shows a similar result for the minimum time. In this case, the minimum time is obtained near the ground, with an angle of attack of 12.9°, which closely approaches 12° as the altitude increases. There is practically no difference between the time required for flying round a circle with an angle of attack of 12° and the time required with the angle of attack corresponding to the actual minimum time. This angle may, therefore, be utilized in an approximate calculation of the circles that can be flown in the shortest time.

Approximate Calculation for Flight in a Horizontal Circle.- There is hardly any perceptible error, as shown by Figure 5, in calculating the shortest time for flight in a circle with the angle of attack at the ceiling. Moreover, the radius obtained with the angle of attack at the ceiling differs so very little from that of the smallest circle, that the latter may be considered as determined. By starting, therefore, with the angle of

attack at the ceiling, we obtain the following simple method of calculation, which is an excellent basis for the comparison of airplanes.

1. Air density at the maximum altitude and the maximum altitude itself.

$$\frac{\sigma_o}{\sigma_g} = \sqrt[3]{\frac{\frac{C_L^3}{C_{D\,max}^2}\;358\,\eta^2}{\left(\frac{W}{P_o}\right)^2 \frac{W}{S}}} \tag{18}$$

$$A_g = 21850 \log \frac{\sigma_o}{\sigma_g} \tag{19}$$

2. Speed at the maximum altitude:

$$V_g = \sqrt[3]{\frac{75\,P_o\,\eta}{C_{Dg}\,\frac{\sigma_o}{2g}\,S}} \tag{20}$$

When the time required for climbing and the speed have already been calculated, these data are already known.

3. Radii for all altitudes:

$$r = \frac{V^2}{g\sqrt{\left(\frac{\sigma_g}{\sigma}\right)^2 - 1}} \tag{21}$$

4. Minimum time for completing flight in a circle at all altitudes

$$t = \frac{2\,\pi\,V}{g\sqrt{\left(\frac{\sigma}{\sigma_g}\right)^2 - 1}} \tag{22}$$

5. Bank and resultant force according to Figure 2.

The values plotted in Figure 7 relating to the D IV airplane of the Siemens-Schuckert Works, were calculated from these formulas. How the calculated values can be used for the purpose of comparison is shown by the radii and minimum time for completing flight in a circle calculated for foreign aircraft (Figs. 8 and 9).

Action of Rudder during Flight in a Horizontal Circle.- Equilibrium in a turn is maintained by the ailerons and rudder. The elevator controls the angle of attack of the supporting wings, as in climbing and in horizontal rectilinear flight. The deflection of the elevator in a turn is different, however, from what it is when flying in a straight line with the same angle of attack, since the resultant force R in a turn replaces the force of gravity and the air flow past the elevator is altered. The effect on the total drag is, however, generally so slight that it may be neglected.

During flight on a horizontal curve the outer parts of an airplane have a greater velocity than the inner parts. The air forces, which vary as the square of the velocity, are, therefore, considerably greater on the outer than on the inner side, resulting in the outward displacement of the center of pressure. Two pairs of forces are thus created. One pair, formed by the lift and the resultant force R, tend to incline the airplane more strongly inward (Fig. 1). An equal and opposite turning moment must, therefore, be produced by inclining the ailerons.

The inner aileron is lowered, in order to produce a greater angle of attack on the inner side, while the outer aileron is raised, in order to diminish the angle of attack on the outer side. The other pair of forces, produced by the drag and propeller thrust, tend to pull the airplane out of the turn (Fig. 10). The rudder must, therefore, be turned inward, in order to produce a moment in the opposite direction. The ailerons act in the same manner as the rudder. By inclining the outer aileron upward, the resistance on the outer side of the airplane is diminished and, by inclining the inner aileron downward, the resistance on the inner side is increased. In this way, a turning moment is produced similar to that produced by moving the rudder (Fig. 10).

There is practically no change in the total lift and drag through the inclination of the ailerons, because the quantity subtracted from the outer side is added to the inner side. The forces exerted by the rudder produce, however, two secondary effects. The total drag of the airplane is increased by the resistance of the ailerons and the lift on the rudder tends to force the airplane downward and outward from the circle. A somewhat greater bank of the airplane is, therefore, required, which itself produces part of the lifting force of the supporting surfaces and thus neutralizes the effect of the rudder.

The deflection of the ailerons and rudder in the curve is, therefore, determined by the turning moments produced by the lift and drag of the airplane on the lever arm e (Fig. 10),

the latter being the perpendicular distance of the lift and drag resultant from the center of gravity of the airplane. In order to determine these important values (first for the simplest case) it is assumed that the supporting surface has a span b of uniform chord (Fig. 11), the coefficients of lift and drag being, therefore, equal along the whole span. The air reaction on a portion of the surface of the width dx is proportional to the square of its velocity, and this velocity is, in turn, proportional to the radius r at this point and, therefore, also proportional to the distance x, as is readily seen from Fig. 11. We can, therefore, reckon the air force on dx as proportional to $x^2\,dx$ and the air reaction on the total area as proportional to the sum of all the $x^2\,dx$. The distance e is then determined from the static moment of the sum of all the $x^2\,dx$ about any point and from the sum of the static moments of all the single $x^2\,dx$ about the same point. If, for the sake of simplicity, we choose the point o, then

$$(y + e) \int_{y - \frac{b}{2}}^{y + \frac{b}{2}} x^2 dx = \int_{y - \frac{b}{2}}^{y + \frac{b}{2}} x^3 dx$$

and

$$e = \frac{2yb^2}{12y^2 + b^2} \tag{23}$$

Since b^2 is very small in comparison with $12y^2$, we may,

without any great error, assume $b^2 = 0$ in the denominator. According to Fig. 11, we further find $y = \frac{r}{\cos\varphi}$.

We therefore get from equation (23)

$$e = \frac{1}{6}\frac{b^2}{r}\cos\varphi \tag{24}$$

Primarily, this expression only applies to single wings. The subsequent calculation shows that the formula

$$e = f\,\frac{b^2}{r}\cos\varphi \tag{25}$$

applies to the entire airplane.

f must be computed separately for each type of airplane and for the lift and the drag. f is diminished by bringing the individual parts causing structural drag nearer the center of gravity, thereby decreasing e. Consequently, supporting surfaces with smaller chords at the ends than in the middle, give especially small values. For larger airplanes, e increases rapidly, viz., with the square of the span, as shown by equation (25).

The turning moments exerted by the ailerons and rudder can be calculated when the leverage is known. The turning moment produced by the pair of forces, the lift and the resultant R, is $M_Q = L\,e$. If, therefore, we substitute the value of e from equation (25) for $L = R\,\frac{W}{\cos\varphi}$, we then have

$$M_Q = f_L\,\frac{b^2}{r}\,W \tag{26}$$

This turning moment must be neutralized by the ailerons.

The pair of forces, propeller thrust and drag, produce the turning moment $M_T = D\ e$.

With $D = L \frac{C_D}{C_L} = \frac{W}{\cos\varphi} \frac{C_D}{C_L}$ and with the value of e from equation (25) we get

$$M_T = f_D \frac{b^2}{r} W \frac{C_D}{C_L} \tag{27}$$

This turning moment must be neutralized by the ailerons and rudder.

Equations (26) and (27) show that the turning moments, which must be exerted by the rudder, increase with the weight and the square of the span of the airplane. The turning moment for any given airplane depends only on the radius of the turn and becomes a maximum for the sharpest turn.

If a sufficient number of measurements of the air forces on the ailerons and rudder (on models) were available, it would not be difficult to give a numerical example for the required deflection of the rudder. Preliminary calculations show that, single-seat combat airplanes, deflections of 1.5° to 3° are required for the sharpest turns. The increase in the drag may here be neglected, so that equations (18) to (22) will give, with practical accuracy, the principal data on the curvilinear flight of combat airplanes. After these data have been determined, the turning moments, which must be exerted by the rudder, can be calculated and the size of the rudder determined. If a quick transition to the sharpest curve is desired, then the

rudder must be of such dimensions that only a small deflection is required in the sharpest curve. There is then, up to the maximum deflection of 15°, a reserve that can be utilized for quick transition into the turn and which, in conjunction with the time of quickest turn, will furnish a satisfactory measure of the turning power of an airplane in horizontal flight. The best airplanes have about 8-fold reserve rudder deflection.

Transition into a Horizontal Turn.- It is possible to change from straight flight to a horizontal turn by deflecting either the rudder or the ailerons. If the rudder is deflected, then the turning moment $L_T\ h_T$ (Fig. 10), is produced, which at the same time overcomes the moment of inertia and causes the transition into the turn. The drag D at once exerts a countermoment on the lever-arm e, while the lift on the lever-arm e produces the turning moment which banks the airplane. This method is employed principally for curves with large radii. When, however, it is desired to pass quickly into a sharp turn, the ailerons are used (Fig. 12). By this means, the airplane is first banked, whereby the moment of inertia about the longitudinal axis of the airplane must be overcome. The lift, acting at right angles to the wings, then produces the component force $L \sin \tau$, which forces the airplane into the turn. The calculation of these reactions is omitted here, because the determination of the various moments of inertia is too lengthy.

Reaction of the Propeller.- When the center of gravity of the airplane lies in the plane of symmetry and there is only one propeller, the ailerons and the rudder must overcome the turning moment of the propeller. If the propeller, as viewed from the pilot's seat, revolves clockwise, an anticlockwise turning moment of

$$M = 716 \frac{P}{N} \tag{28}$$

is exerted on the airplane.

In order that this turning moment may be neutralized by the ailerons, the right-hand aileron must be raised and the left-hand one lowered (as viewed from the pilot's seat), so that the drag is increased on the left and decreased on the right. The new turning moment, produced in this manner, must be neutralized by deflecting the rudder to the right. If the propeller revolves in the opposite direction, the control surfaces must be deflected in the opposite direction. The normal positions of the ailerons and rudder in engine-driven flight are therefore determined by the direction of rotation of the propeller. This must therefore be taken into consideration in connection with curvilinear flight. If, therefore, the propeller revolves clockwise, the deflection of the ailerons is smaller and that of the rudder greater in a turn to the right, than in a turn to the left.

Summary.- In view of the fact that the curve of total drag in combat airplanes is only slightly increased by the deflection

of the rudder, a simple formula is given for the quickest flight turn and a basis is derived for rudder calculations. The quickest turn and the reserve rudder deflection constitute a criterion of the turning ability of an airplane in horizontal flight.

Translated by
National Advisory Committee
for Aeronautics.

Figs. 1 & 2

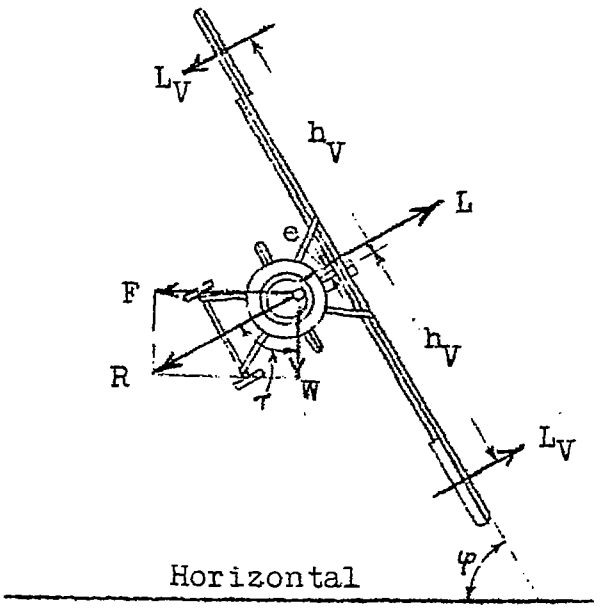

Fig. 1 Principal air forces and action of ailerons in horizontal curvilinear flight.

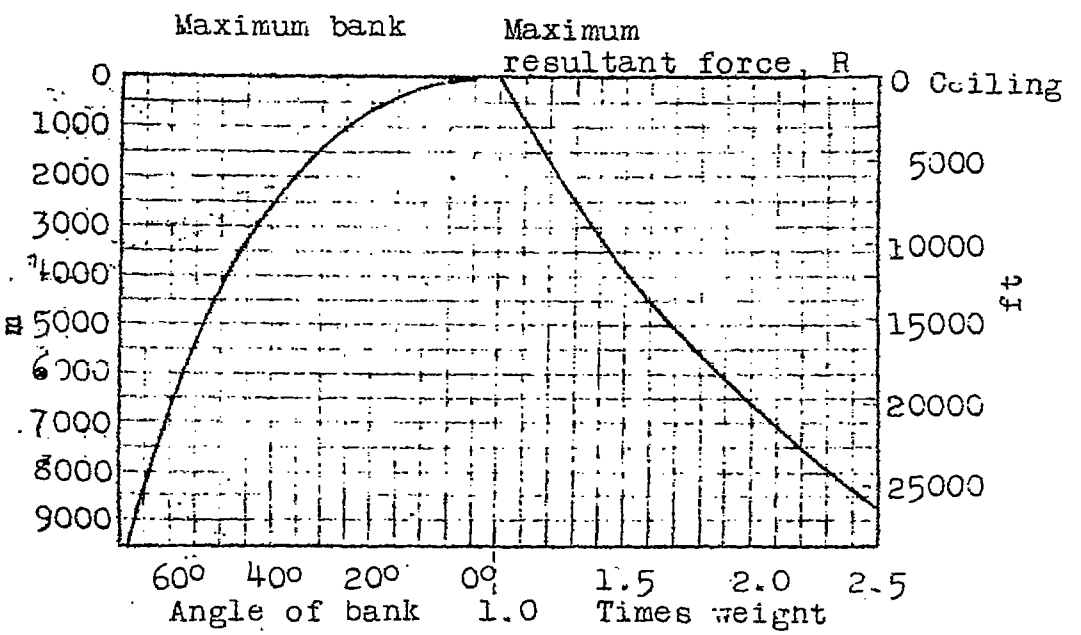

Fig. 2 Maximum bank and maximum resultant force R plotted against the distance below the ceiling.

Fig. 3

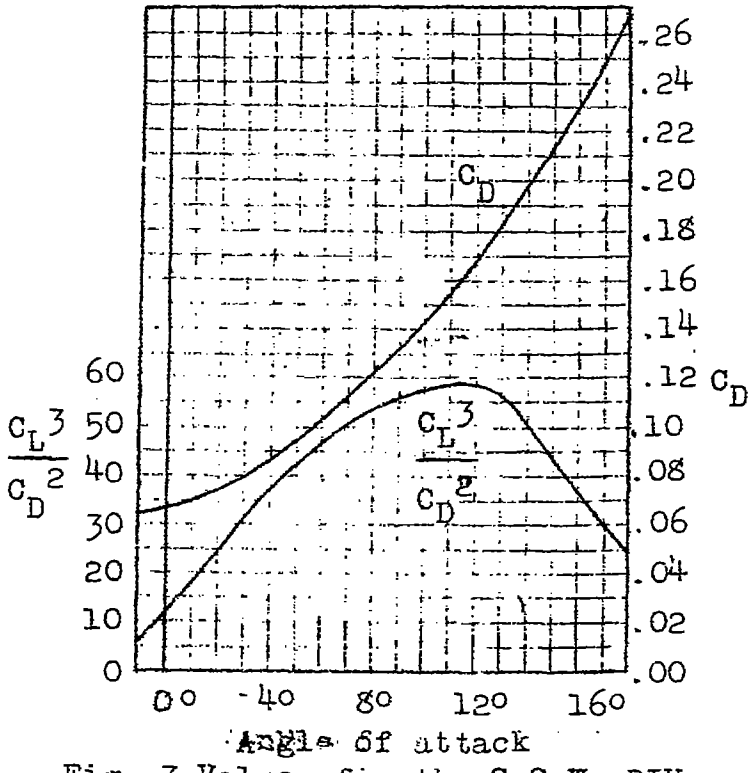

Fig. 3 Values for the S.S.W. DIV airplane

Fig. 4

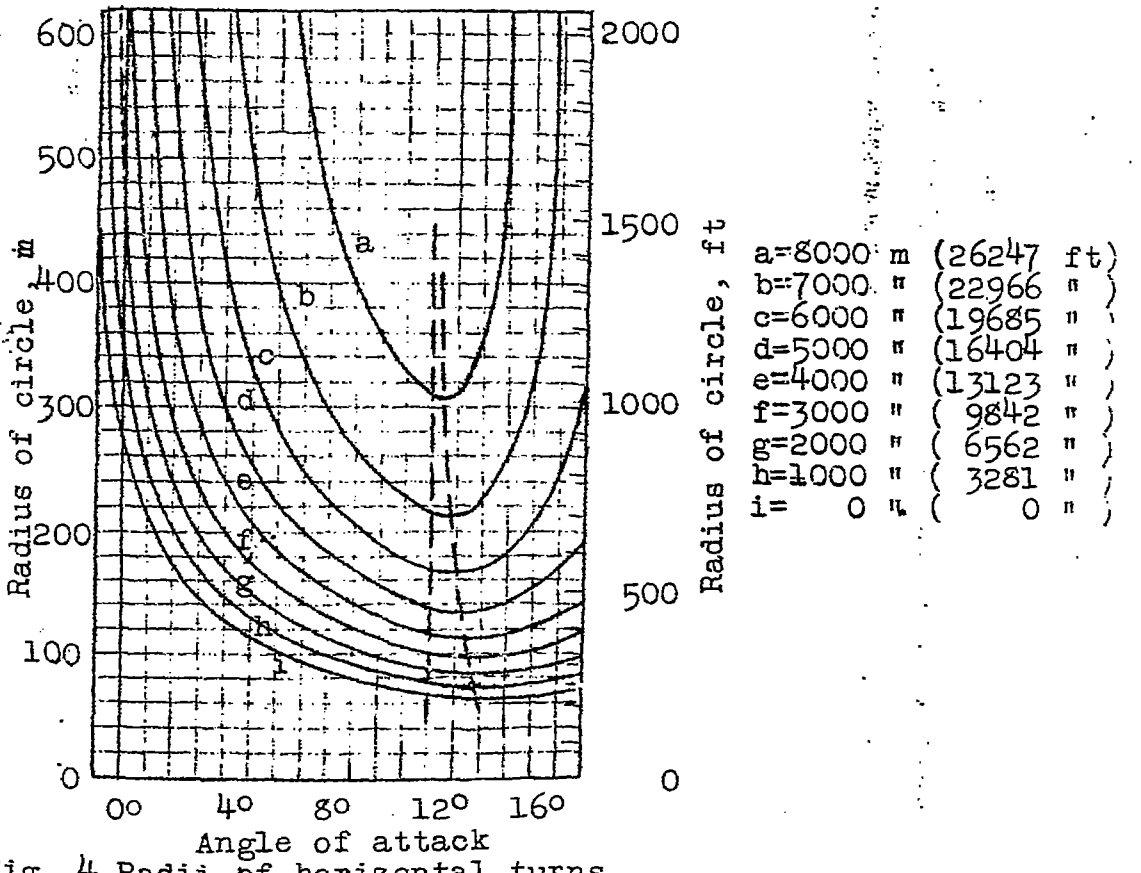

Fig. 4 Radii of horizontal turns for the S.S.W. DIV airplane plotted against the angle of attack at various altitudes.

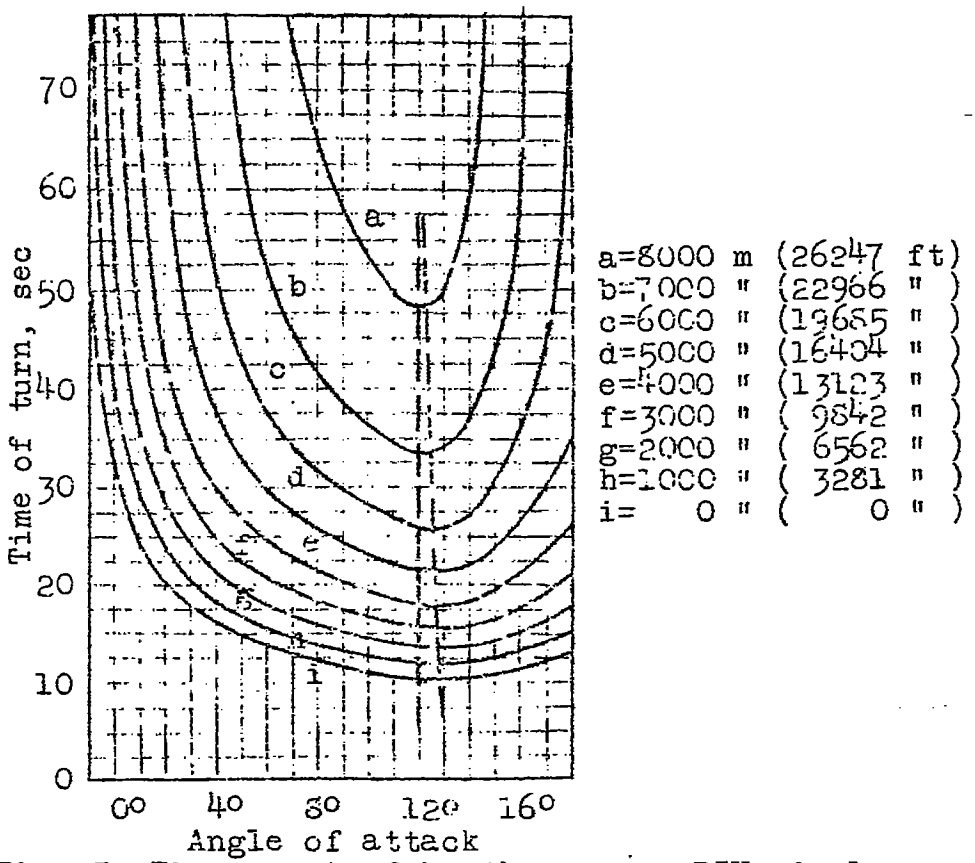

Fig. 5 Time required by the S.S.W. DIV airplane for completing a circle plotted against the angle of attack at various altitudes.

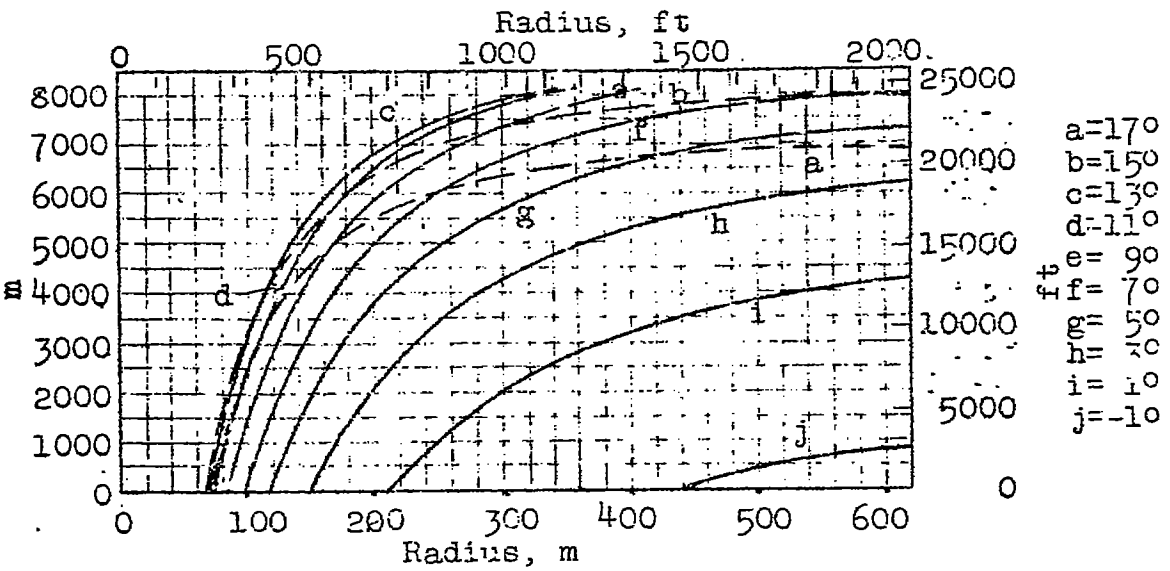

Fig. 6 Radii of the horizontal turns for the S.S.W. DIV airplane plotted against the altitude for various angles of attack

Fig. 7 & 8

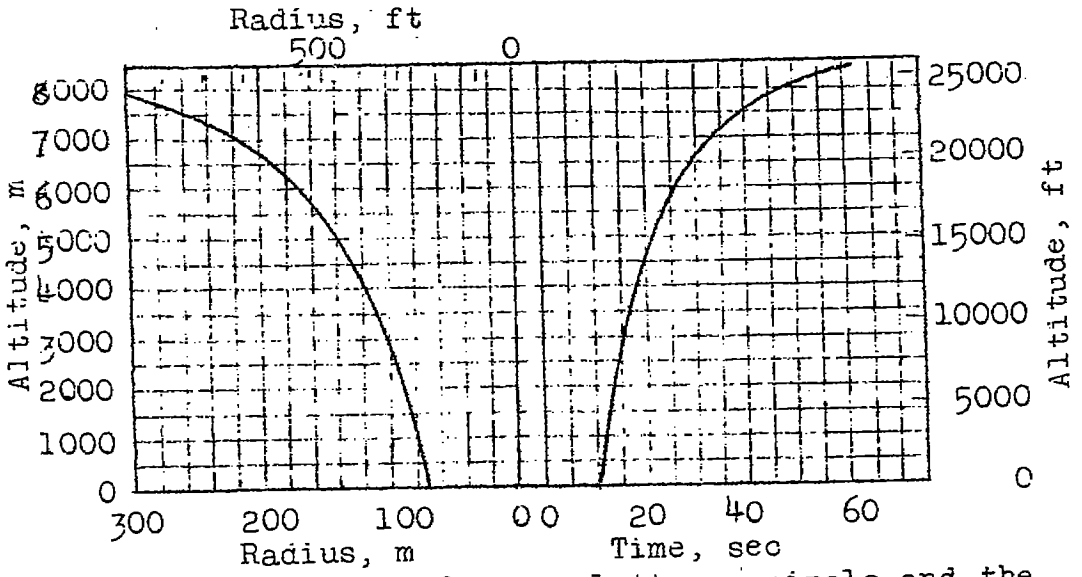

Fig. 7 Time required for completing a circle and the radii for the S.S.W. DIV airplane plotted against the altitude at an angle of attack of 12°

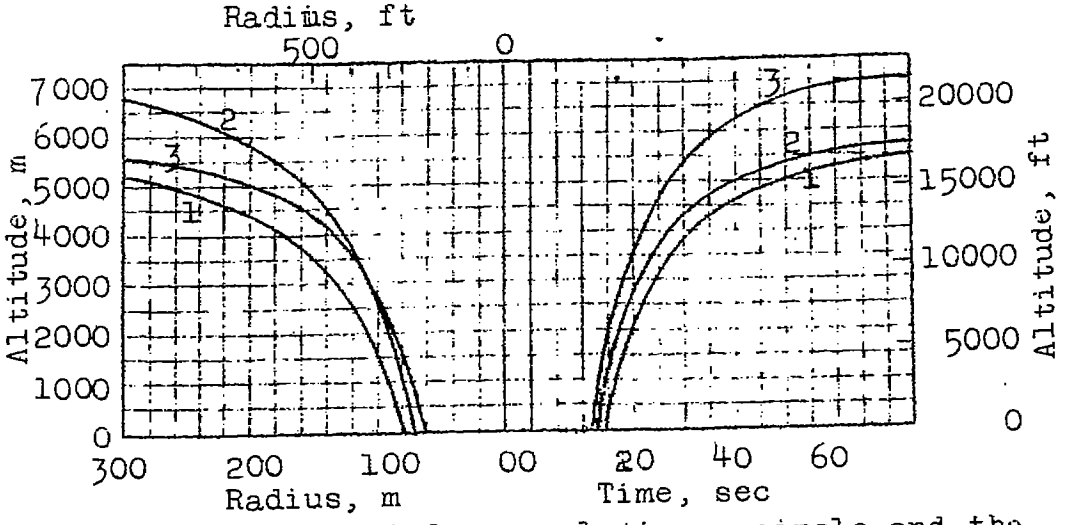

Fig. 8 Time required for completing a circle and the radii of the turn for three foreign airplanes, plotted against the altitude with the angle of attack at the ceiling.

Figs. 9 & 10

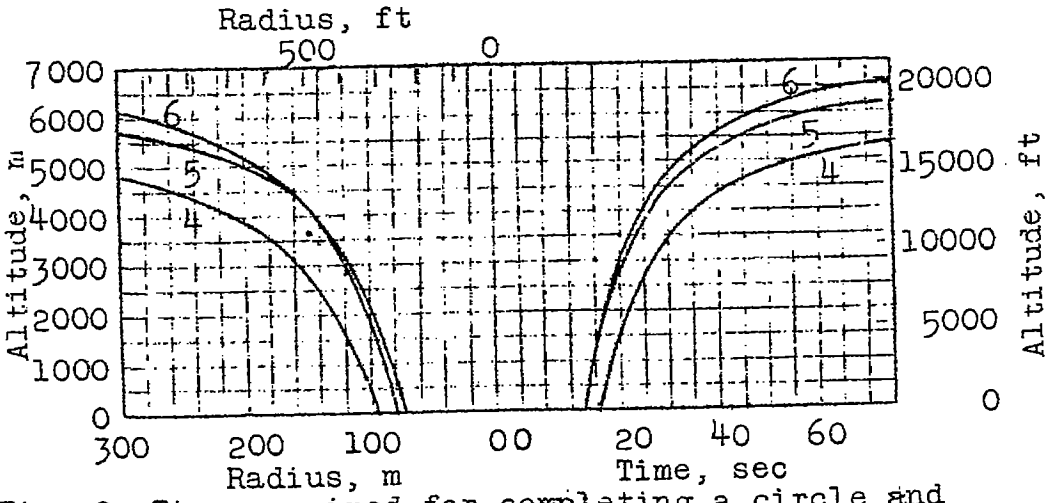

Fig. 9 Time required for completing a circle and radii for three foreign airplanes, plotted against the altitude with the angle of attack at the ceiling.

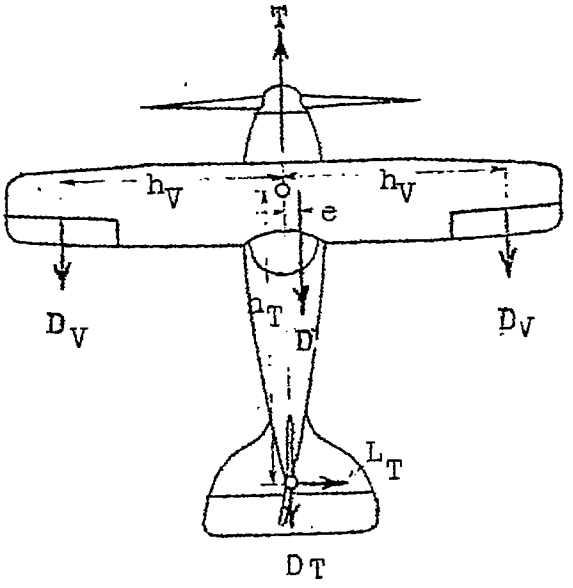

Fig. 10 Principal forces and actions of the rudder during flight in horizontal turns.

Figs. 11 & 12

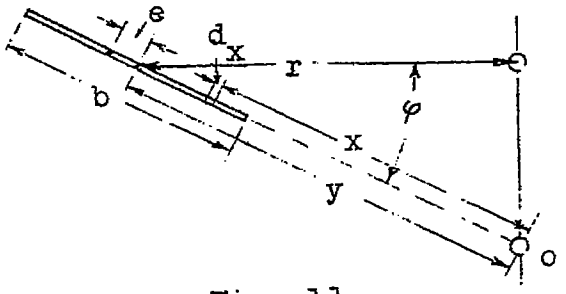

Fig. 11

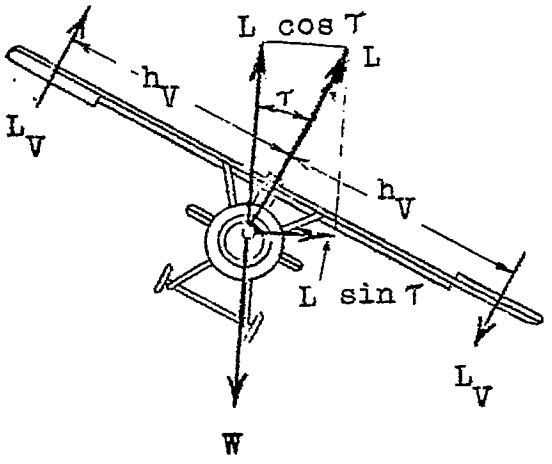

Fig. 12 Initiation of curvilinear flight by deflecting the ailerons.