TIONAL ADVISORY COMMITTEE
FOR AERONAUTICS

APR 1 1924
MAILED

TO: Mr. Truscott

TECHNICAL NOTES

NATIONAL ADVISORY COMMITTEE FOR AERONAUTICS.

No. 186

TESTING AIRPLANE FABRICS.

By A. Pröll

From Technische Berichte, Volume III, No. 7.

April, 1924.

NATIONAL ADVISORY COMMITTEE FOR AERONAUTICS.

TECHNICAL NOTE NO. 186.

TESTING AIRPLANE FABRICS.*

By A. Pröll.

The following considerations determine the strength of airplane fabrics:

1. Maximum air forces acting on the surfaces (including local stresses);
2. Tensions produced in the fabric, in the directions of both warp and filling;
3. Factor of safety required.

The question of the permissible depression of the fabric as affecting the aerodynamic requirements in regard to the maintenance of the shape of the section, the tenacity and extensibility of the layer of dope, its strength and its permeability to water is almost as important.

Air Pressure and Tensions in the Fabric.- According to the English measurements published by Munk,** the distribution of air pressure in the loading case A may be taken as represented by the full lines in Fig. 1, while in the loading case C, the distribution represented by the dotted lines may be assumed.

---

* From Technische Berichte, Volume III, No.7, pp. 282-291.

** Munk: "Druckverteilung über Tragflachen" (Pressure Distribution over Airfoils), Zeitschrift fur Flugtechnik und Motorluftschiffahrt, 1916. Also Heimann and Madelung: "Beanspruchung der Flugelrippen" (Stressing of Wing Ribs), Technische Berichte, Vol. I, No.3, p.81.

The numbers in Fig. 1 represent the pressure as multiples of the double impact pressure

$$\frac{V^2\gamma}{g}.$$

The tension of the fabric depends not only on the maximum air pressure p (acting on the front portion of the upper surface of the wing), but also on the curvature of the surface. The greater the latter is, the smaller are the stresses induced, since the fundamental equation for doubly curved surfaces is

$$p = \frac{S_1}{\rho_1} + \frac{S_2}{\rho_2} \qquad (1)$$

Just at the leading edge of the upper or negative pressure side of the wing, ρ_2 and S_2 are small and recent calculation shows that S_1 and ρ_1 are still smaller, although p may be very large. For this reason, the generally very flat lower, or pressure, side must also be tested (ρ_2 large). Although p is small, S_2 and S_1 may be large at that point.

For $\rho_2 = \infty$ (flat surface) we then have simply $S_1 = \rho_1 p$, which may well be used as an approximation for wing sections which are very flat underneath. As I have shown in a previous article,* we then have

$$\rho_1 = \frac{l_1^2}{8 f_1} \qquad (2)$$

in which f_1 is the camber of the surface, so that, in this simple case,

$$S_1 = \frac{p l_1^2}{8 f_1} \qquad (3)$$

If it is assumed, from the English curves, that the highest

* Pröll: "Zur Frage der Festigkeit der Tragflachenbespannungen," (Strength of Wing Coverings), Zeitschrift für Flugtechnik und Motorluftschiffahrt, 1915.

value of p in the forward portion of the under surface of the wing, is about 120 kg/m² (24.6 lb./ft.²), the distance between the ribs (l_1) is 0.4 m (1.31 ft.) and the camber of the surface (f_1), obtained by experiment,* is 12 mm (.47 in.) it follows that

$$S_1 = \frac{120 \times (0.4)^2}{8 \times 0.012} = 200 \text{ kg/m } (11.2 \text{ lb./in.}).$$

In measuring the air pressure on the upper-pressure side, we must start from the normal load per unit area of wing surface,

$$\Lambda = \frac{\text{weight of airplane}}{\text{area of wing surface}},$$

which attains a maximum value of about 50 kg/m² (10.24 lb./ft.²)**.

According to the curves shown in Fig. 1, the maximum megative pressure $\left(-1.5 \frac{V^2\gamma}{g}\right)$ occur in case A, while the mean air pressure p produced by the combined positive pressure and negative pressure on the lower and upper surfaces respectively of the wing, reaches a value approximately equal to $-0.7 \frac{V^2\gamma}{g}$. The greatest air pressures p, which are concentrated in a narrow region (forward), can reach $p_{max} \sim 2.2\Lambda$. If a safety factor of 5 is required for the whole airplane, in the loading case A, it is not necessary for p_{max} to be increased 5 times since, in the value of p_{max}, a considerable increase above the normal wing loading has been already included by assuming an interception of flight at an angle of attack of 12.5°. Therefore a maximum loading of 6

* Pröll: "Der Stoff auf der Tragfläche" (Wing Fabrics), Technische Berichte, Volume III, No.6, p.234.

** Everling: "Die Vergrösserung der Flugzeuge" (Increasing the Size of Airplanes), Technische Berichte, Volume III, No.2, p.39.

to 8 times A (300 to 400 kg/m² = 61.44 to 81.9 lb./ft.²), in the neighborhood of the forward edge, may be regarded as safe. Here, as previously mentioned, on account of the small radius of curvature ρ_2, the tensions S_2 and S_1 are smaller. For the middle portion of the wing section, however, a loading of about 250 kg/m² (51.2 lb./ft.²) is quite sufficient.

As has been shown (Technische Berichte, Volume III, No. 6, p.234), these air pressures alone produce tensions in the fabric which, per unit of length, have a numerical value, S, approximating p(kg/m²). Since bending of the wing spar also takes place in the actual wing, an increase in the magnitude of the tensions, that is, of S_1 (parallel to the spars) is to be expected. In no case, however, does it amount to double the normal value.

Requirements for the Fabric.- In general, with a safety factor of 5 for the airplane in the most unfavorable case, a maximum tension of 700 - 800 kg/m (39.2 to 44.8 lb./in.) may occur in the fabric in the most dangerous place. On the other hand, it would appear expedient, even with doped fabrics to calculate on a safety factor of at least 6 to 8. In the customary loading tests, with nearly uniform distribution of sand (case A), no tearing of the fabric must occur. Here a tenacity of 900 - 1200 kg/m (50.4 to 67.2 lb./in.) for doped fabric is desirable.

By doping with "cellon," however, the raw fabric is made considerably stronger. According to experiments with different dopes, the tenacity increased, after five dopings, from 960 (53.76)

for undoped fabric to about 1680 kg/m (94.08 lb./in.) in the direction of the warp, and from 1300 to 1800 kg/m (72.8 to 100.8 lb./in.) in the direction of the filling. Hence it is permissible to reduce somewhat the requirements for the tearing strength of the undoped fabric. Just how much can only be estimated, since the results of only one experiment are available on the increase of tearing strength from doping weaker fabric. A half-linen fabric (from Hauser and Spiegel) was tested undoped, and also after five dopings. The strength of the fabric was thus increased from 550 to 1140 kg/m (30.8 to 63.8 lb./in.) in the direction of the warp, and from 1100 to 1360 kg/m (61.6 to 76.2 lb./in.) in the direction of the filling (with greater uniformity after treatment). Accordingly, there appears to be a sufficient margin of safety afforded by requiring a minimum strength of the raw fabric in the weaker direction (generally that of the warp) of 700 kg/m (39.2 lb./in.) since we can rely on the strengthening effect of the dope.

Experiments now in progress on the bending of spars, have already shown that, from the standpoint of strength, it is desirable to arrange the fabric so that the direction of greater elasticity shall be parallel to the spars, where a greater bending of the spars has to be reckoned with, as in the case of lightly built airplanes with thin spars. On the other hand, with heavy, less flexible spars, this does not pay, on account of the difficulty of producing such fabric.

Requirements with Regard to Change of Shape.-

(a) Undoped Fabric.- The elongation, (up to tearing stress) parallel to the spars, must not exceed 7%. At 150 kg/m (8.4 lb./in.) the elongation must not exceed 50% of the elongation at rupture.

(b) Doped Fabric.- The elongation parallel to the spars must not exceed 1.5% under stresses of 150 kg/m (8.4 lb./in.). The resulting changes in shape must be decreased as much as possible, since they are undoubtedly too great at present. This can be promoted by producing a good normal dope and also by improved production of the raw fabric (especially for small stresses). The stretching of the fabric is generally different along the warp from that along the filling. Since the elongation parallel to the spars is almost always greater than parallel to the ribs, it is advisable to arrange the fabric with the direction of less elongation parallel to the ribs.

Strength and Elongation of the Dope Layer.- Experiments on this are in preparation. For the present, however, it may be assumed that the layer begins to tear with a stretch of 4 to 5% and tensions of 450 to 500 kg/m (25.2 to 28 lb./in.), hence only with much greater elongations and tensions than can arise in flight.

The testing of the fabrics must be extended to cover all the questions mentioned at the beginning of this article and, where possible, under conditions which exist in the complete wings when in flight. In general, such experiments are difficult and very expensive, besides requiring a large amount of space. It is sufficient, however, as will be shown later, to carry out simple

loading experiments with easily made frames, which, under certain conditions, give an approximate reproduction of the stress conditions in the wings and at least enable useful conclusions to be drawn as to the strength and elongation of the fabric and the strengthening effect of the dope.

The following apparatus is required for such tests: A strong wooden frame, 100 × 30 cm (39.37 × 11.81 in.) adapted for loading with sand (Figs. 2 to 4); an indicator for measuring the depression (Figs. 5 and 6); an arrangement for testing the permeability; a device for making tests with a dropped ball; a contrivance for making the "impression" test; about 100 kg (220.46 lb.) of fine sand.

The frame is covered in the usual manner with the fabric to be tested, with the warp parallel to the length of the frame and the customary initial tension regulated by means of the ball test. The piece of fabric is then doped and the dry weight of the dope per square meter is determined. With the frame uniformly loaded at 100 kg/m^2 (20.48 lb./ft.^{2}) sag in the middle (intersection of the diagonals) is then measured immediately, after 15 minutes, and after 1 hour. The load is then increased to 300 kg/m^2 (61.44 lb./ft.^{2}) and the sag at the center is measured immediately and again after 1 hour.

Table I: Example of a Test.

Fabric B, given three coats of cellon dope and stretched after treatment.
Weight: undoped, 114.8 g/m²(3.39 oz./yd.²); doped, 146.5 g/m²(4.32 oz./y

Load		Sag							
		Immediately		After 15 min.		After 1 hour		1 hour after unloading	
kg/m²	lb./ft.²	mm	in.	mm	in.	mm	in.	mm	in.
100	20.48	10.2	.402	10.5	.413	10.6	.417	10.3	.406
Unloaded		10.0	.394	10.1	.398	10.3	.406	--	
300	61.45	22.0	.866	22.4	.882	22.5	.886	22.1	.870
Unloaded		20.0	.787	20.3	.799	20.3	.799	--	

With reference to the deformation of the wing fabric, the given permissible sag must not be exceeded, but must correspond to the permissible deformation of ordinary loaded wings.

Tearing Test.- Two strips, 25 cm (9.84 in.) long by 5 cm (1.97 in.) wide, are cut along the threads, one parallel to the warp and the other parallel to the filling, and tearing-test samples prepared, as shown in Fig. 7. On the back a measured rectangle ($\overline{ab}$ = 3 cm (1.18 in.), $\overline{cd}$ = 10 cm (3.94 in.) is marked off and the strip is loaded until it tears. The following data are then determined: the breaking load and the breaking load per unit width; also the load, stress and elongation when the dope film begins to tear (observed with magnifying glass and by crackling sound when the dope film tears). In order to increase the load as uniformly as possible, it is recommended to hang from the strip a vessel which can be gradually filled with sand.

The loading should be done so slowly that the experiment will last about 30 minutes. For determining the permissible elongation the experiments with the frame are decisive. For further investigations, the abridged determination of the N.C. (normal characteristics), by measuring the elongation and contraction of the measured rectangle, is recommended.

Determination of the Initial Tension.- From the sag produced by the sand loading, we can only calculate a large initial stress with sufficient accuracy, when we know normal characteristics of a particular fabric on the system of curves derived from it. In a direct way, we can at least obtain comparative values of the initial tensions by the dropped-ball test. A ring of about 12 cm (4.72 in.) diameter is held with gentle, but uniform pressure against the lower side of the fabric, so that the felt covering of the ring touches evenly all around. The ball-dropping apparatus is placed over the center of the ring, so that the end of the glass tube is from 1 to 2 mm (.039 to .079 in.) above the fabric. The rebound of a small steel ball falling from about 80 to 100 cm (31.5 to 39.37 in.) is measured and for the given size of ring, with well-stretched and doped fabric, should reach at least one-quarter of the height of fall. For the portion of the fabric circumscribed by the ring, we may regard the height of rebound as a measure of the tension in the fabric. In order to obtain comparable results in testing dopes, the undoped fabric must be stretched on the frame with equal tension before doping. The dropped-ball test can also be used in this connection.

The necessary initial tension of the untreated fabric is determined in experiments with dopes of known properties and must then be maintained in experiments with other dopes.

The application of the "impression" apparatus to the measurement of the sag also enables the initial tension to be directly determined. A wooden ring of 20 cm (7.87 in.) diameter is held over the center of the frame, so that it lies on the fabric without pressure, but resists the fabric when the latter is pushed upward (Figs. 5 and 6). The device for measuring the sag is applied at the center of the ring. The pointer is then loaded at a distance a from its pivot by means of a small weight w and the amount of the sag f is read. The tension is then given approximately by $S_0 = w \frac{a}{b} \frac{l}{2\pi f}$. . The test can also be applied while the fabric under tension is still undoped. This test has the advantage over the dropped-ball test in that it requires, for calculation, no constants depending on the fabric. Both the dropped-ball test and the impression test may be used for comparing the strength of different dopes.

For testing the water-tightness, a device consisting of a vertical glass tube, closed at the bottom by a piece of the fabric placed between iron flanges with rubber washers, was used. It was filled with water to a height of about 300 mm (11.81 in.). The doped side of the fabric was placed uppermost. The process of gradually soaking through to the under side and the formation of drops was observed by means of a mirror and the time measured.

On account of the rapid evaporation of the moisture that leaked through, the apparatus, as first employed, was not very suitable. It can be improved, however, by placing the flange with the inserted fabric in a glass beaker closed at the top.

EXAMPLE.- For fabric with three coats of dope and one of paint, it took half an hour for the moisture to soak through and after 4.5 hours only three drops had fallen. Fabric doped twice and not painted was soaked through in the same way and drops fell at intervals of about one second.

Fabric which had been given four good coats of dope requires from 3 to 4 hours for soaking through under 30 cm (11.81 in.) head of water (300 kg/m² = 61.45 lb./ft.²) and 18 to 24 hours under 5 cm (1.97 in.) head of water. The previously mentioned fabric gave a mean of 4 hours and of 20 hours, respectively.

Interpretation of Experiments with the Stretching Frame.

Calculation of Tension and Elongation.- After loading, there is a depression f at the center (Fig. 2). Under the permissible assumption that the fabric is bent into the shape of a parabola, the radii of curvature, in the two principal directions, are

$$\rho_1 = \frac{l_1^2}{8\,f} \quad \text{and} \quad \rho_2 = \frac{l_2^2}{8\,f} \tag{1}$$

If ϵ_1, ϵ_2 are the total elongations,

ϵ_{1_0}, ϵ_{2_0}, the initial elongations (in consequence of initial tension alone), and

ϵ_1', ϵ_2' the additional elongations caused by loading,

then $$\epsilon_1' = \frac{8}{3}\frac{f^2}{l_1^2} \quad \text{and} \quad \epsilon_2' = \frac{8}{3}\frac{f^2}{l_2^2} \tag{2}$$

For the tensions under a sand load p (kg/m²), we have the condition

$$\frac{S_1}{\rho_1} + \frac{S_2}{\rho_2} = p \qquad (3)$$

In the determination of S_1 and S_2, we can put, with sufficient accuracy,

$$S_1 \sim S_2 \qquad (4)$$

whence

$$S_1 \sim S_2 = p \frac{\rho_1 \ \rho_2}{\rho_1 + \rho_2} = \frac{p}{8f} \frac{l_1^2 \ l_2^2}{l_1^2 + l_2^2} \qquad (5)$$

This value of $S_1 \sim S_2$ rests on the assumption that the fabric is stressed uniformly in all directions, which appears, from the experiments, to hold quite good.* It gives a limiting value for the tension. A second limiting value is obtained by applying, to the stressed surface of the cloth, the formulas for thin plates with large curvature.** These give for a long narrow rectangle

$$S_1 = \sqrt[3]{K \ p^2 \ \frac{l_1^2}{4}} \qquad (6)$$

in which $K = \frac{m^2}{6(m^2 - 1)} \ E$, $m = \frac{\text{longitudinal elongation}}{\text{transverse contraction}}$ (7)

and E = the "ideal modulus of elasticity" = $\frac{S}{\epsilon}$

for the range under consideration as obtained from elongation experiments. This formula assumes the correctness of Hooke's Law. In spite of the entirely different conditions present in this case, it gives, however, useful values for fabric with small initial tension.

* Föppl: "Vorlesungen über Technische Mechanik" (Lectures on Technical Mechanics) V, par. 30.
** Föppl: V, par. 24.

Numerical Example.- In the first place, a frame with small initial tension was tested (fabric treated with three coats of dope). On loading the frame with 20 kg (44.09 lb.) of sand,

$$p = \frac{20}{1 \times 0.3} = 67 \text{ kg/m}^2 \ (13.72 \text{ lb./ft.}^2)$$

The depression in the middle amounted to $f = 1.26$ cm (.496 in.). Hence $\rho_1 = 0.9$ m (2.95 ft.), $\rho_2 = 10.0$ m (32.81 ft.) and $S_1 \sim S_2 = 55.4$ kg/m (3.10 lb./in.) (first limiting value).

According to the tension tests on strips of fabric with $S_2 = 0$ and $S_1 = 100$ kg/m (5.6 lb./in.) the elongation $\epsilon_1 = 0.012$ and consequently, $E = \frac{100}{0.012} = 8350$ kg/m (467.58 lb./in.). The contraction was $\frac{1}{2.5}\ \epsilon_1$, so that $m = 2.5$ and $K = 1650$.

Hence $S_1 = \sqrt[3]{1650 \times 67^2 \times 0.0225} = 55$ kg/m (3.08 lb./in.) (second limiting value).

The actual stress S_1 always lies between two close values, while S_2 may vary considerably. For $S_1 = 56, 55.4, 55, 54$, the corresponding values of S_2 are 48, 55.4, 60, 70. Accordingly, $S_1 = 55$ kg/m (3.08 lb./in.) and $S_2 = 60$ kg/m (3.36 lb./in.) may be taken as the second limiting values.

Although the second calculation is only applicable in a limited way to the doped fabric, we may nevertheless choose the mean value $S_1 = 55.2$ kg/m (3.09 lb./in.) when the limiting values for S_1 lie so near together, and hence, by calculation, obtain $S_2 = 57$ kg/m (3.19 lb./in.).

The additional elongations amount to

$$\epsilon_1' = \frac{8f^2}{3\,l_1^2} = 0.0047 = 0.47\%$$

and

$$\epsilon_2' = \frac{8f^2}{3\,l_2^2} = 0.00045 = 0.045\%.$$

Another, though scarcely more advantageous, method of calculating S_1 and S_2 is offered by the N.C. The two elongations are calculated from the depth of the bend and substituted in the equations found in the short way by the N.C. method (Technische Berichte, Vol. III, No. 3, p.60).

$$\epsilon_1' = \beta_1 S_1' - c_1 S_2', \quad \epsilon_2' = - c_2 S_1' + \beta_2 S_2' \quad . \tag{8}$$

from which S_1' and S_2' are calculated. In place of these equations we may,, of course, employ the N.C. curves themselves, in which the position of $(S_1' \; S_2')$ is sought by the insertion of ϵ_1' and ϵ_2'. In general, these values of S_1' and S_2' do not satisfy the equation $\frac{S_1}{\rho_1} + \frac{S_2}{\rho_2} = p$, because S_1' and S_2' are only calculated from the sag and therefore differ from the total tensions S_1 and S_2, which take account of the initial tension also. The differences are not great with the generally small initial tensions, so that the lower limiting values can be calculated by this method. This, again, offers the possibility of directly calculating the initial tension and elongation, since we are warranted in regarding the differences between S_1' and S_2' and the values S_1 and S_2, obtained from equation (3) as these initial tensions S_{1_0} and S_{2_0}. Ordinarily, however, these differences lie within the unavoidable errors and inaccuracies of the assump-

tions, so that we can obtain the desired results by this method, only in case of large initial tensions.

In the above example, from

$$10^6\ \epsilon_1' = 120\ S_1' - 50\ S_2'$$
$$10^6\ \epsilon_2' = -51\ S_1' + 62\ S_2'$$

with $\epsilon_1' = \frac{47}{10^4}$ and $\epsilon_2' = \frac{4.5}{10^4}$, we obtain $S_1' = 51.8$ kg/m (2.9 lb./in. and $S_2' = 49.8$ kg/m (2.79 lb./in.) From the family of curves in Fig. 8, we get $S_1' \sim 52$ kg/m (2.92 lb./in.) and $S_2' \sim 42$ kg/m (2.35 lb./in.). Comparison with the previously calculated total tensions $S_1 = 55.7$ kg/m (3.12 lb./in.) and $S_2 = 57$ kg/m (3.19 lb./in.) accordingly would give initial tensions of $S_{1_0} \sim 4$ kg/m (.22 lb./in.) and $S_{2_0} = 7$ kg/m (.39 lb./in.) or 15 kg/m (.84 lb./in.). These values, especially of S_{2_0}, are, however, very uncertain and, at best, only approximate.

The same fabric, likewise with three coats of dope but with higher initial tension, was now put on the frame and tested with two different loadings. It was observed that, with $p = 67$ kg/m^2 (13.72 lb./ft.^{2}), $f = 1.00$ cm (.394 in.) and hence $\rho_1 = 1.125$ m (3.69 ft.), $\rho_2 = 12.5$ m (41.0 ft.), $\epsilon_1' = 0.00296$, $\epsilon_2' = 0.00027$ and, from equation (3), $S_1 \sim S_2 = 69$ kg/m (3.86 lb./in.); also with $p = 200$ kg/m^2(40.96 lb./ft.^{2}), $f = 1.6$ cm (.63 in.) and hence $\rho_1 = 0.70$ m (2.3 ft.), $\rho_2 = 7.80$ m (25.6 ft.) $\epsilon_1' = 0.0076$, $\epsilon_2' = 0.00068$ and, from equation (3), $S_1 \sim S_2 = 128$ kg/m (7.17 lb./in.).

Equation (6) gives again, independently of the initial ten-

sion, the values S_1 = 55 kg/m (3.08 lb./in.) and S_2 = 114 kg/m (6.38 lb./in.), not usable here, however. On the other hand, according to equation (8), the additional tensions in both cases are

$$S_1' = 32.5 \text{ kg/m } (1.82 \text{ lb./in.})$$
$$S_2' = 31.4 \text{ kg/m } (1.76 \text{ lb./in.})$$
$$S_1' = 84 \text{ kg/m } (4.7 \text{ lb./in.})$$
$$S_2' = 83.5 \text{ kg/m } (4.68 \text{ lb./in.})$$

and therefore the initial tensions are

$$S_{1_0} = 37 \text{ kg/m } (2.07 \text{ lb./in.})$$
$$S_{2_0} = 38 \text{ kg/m } (2.13 \text{ lb./in.})$$
$$S_{1_0} = 44 \text{ kg/m } (2.46 \text{ lb./in.})$$
$$S_{2_0} = 44.5 \text{ kg/m } (2.49 \text{ lb./in.})$$

The difference in the calculated initial tensions is due to the different durations of the tests,* the influence of the initial loading, etc., as likewise to the fact that a small change in f has a great effect on the final results. Hence $S_0 \sim 40$ kg/m (2.24 lb./in.) is a more useful and more probable mean value for both directions.

Set of Curves for Facilitating the Calculation of the Tensions and Initial Tensions.- With the assumption (permissible, at least, in the case of the frame experiments) that the tensions in both directions remain equal, the following graphic process is applicable. The elongation in direction 1, arising from the ini-

* With the heaviest load, readings were taken immediately, but with the lighter load, only after about twenty minutes.

tial tension and the loading with sand, is

$$\epsilon_1' = \epsilon_1 - \epsilon_{1_0} = \frac{8f^2}{3\,l_1^2} \qquad (9)$$

If f is replaced by equation (5), we obtain, after some transformation

$$S^2\ (\epsilon_1 - \epsilon_{1_0}) = \frac{p^2 l_1^2}{24}\left(\frac{l_2^2}{l_1^2 + l_2^2}\right) = p^2 C^2\ . \qquad (10)$$

In the set of N.C. curves (Fig. 8) for different initial extensions ϵ_{1_0} and e.g., for $p = 100$ kg/m² (20.48 lb./ft.²)*, there are drawn the $S - \epsilon_1$ curves corresponding to equation (10) and the γ_1 and γ_2 curves, corresponding to the points of equal tension S_1 and S_2.

From equation (3), with the observed f, we can then calculate the value of S_1 (S_2), or obtain it from the hyperbola

$$Sf = \frac{p}{8}\left(\frac{l_1^2\ l_2^2}{l_1^2 + l_2^2}\right) = \text{constant},$$

and immediately obtain in the corresponding points of the γ_1 and γ_2 curves, the total elongation ϵ_1 and the initial elongation ϵ_{1_0} (from the $S\epsilon_{1_0}$ set of curves). Their difference $(\epsilon_1 - \epsilon_{1_0})$, or the (also directly calculable) value of $\epsilon_1' = \frac{8f^2}{3\,l_1^2}$, gives, on the γ_1 curve, the additional tension S_1', whence $S_{1_0} = S_1 - S_1'$. The points for direction 2 lie on the γ_2 curve, vertically beneath the first.

---

* With definite instructions as to the sag, the $S\epsilon_0$ curves are drawn, once for all, on tracing paper, which is then placed over the corresponding N.C. curves drawn to the same scale.

EXAMPLE.- With $p = 100$ kg/m² (20.48 lb./ft²) sand load, for a fabric with normal characteristics, a sag of $f = 1.15$ cm (.453 in.) was observed in accordance with Fig. 8. From equation (3) it follows that

$$S = S_1 = S_2 = 90 \text{ kg/m } (5.04 \text{ lb./in.}).$$

The curve γ_1 accordingly gives the total elongation $\epsilon_1 = 0.0059$ and the corresponding point on γ_2, namely, $\epsilon_2 = 0.00236$. At the same time, it is observed that the middle one of the three $S_1 - \epsilon_1$ curves shown (for $\epsilon_{1_c} = 0.002$) passes through the point found on γ_1. Hence $\epsilon_{1_0} = 0.002$ and $\epsilon_1' = \epsilon_1 - \epsilon_{1_c} = 0.0039$, in good agreement with the directly calculated value.

$$\epsilon_1' = \frac{3\ f^2}{8\ l_1^{\ 2}} = 0.00393$$

Thereby we obtain, on the γ curve, the additional tensions

$$S_1' \sim S_2' = 50 \text{ kg/m } (2.8 \text{ lb./in.})$$

and the initial tensions $S_0 \sim 40$ kg/m (2.24 lb./in.)

Remark.- The calculation from equation (8) (with $S_1 = S_2$) gives somewhat different values of ϵ_0 and S_0, because the replacement of the slightly curved N.C. lines by the straight lines of equation (8) (for the S_1 and S_2 curves) produces quite large discrepancies. If the tensions are not too great (up to about 100), this method is still permissible. In the last example ($p = 100$ kg/m² = 20.48 lb./ft.²) this calculation gives

$$S_1' = 43 \text{ kg/m } (2.41 \text{ lb./in.})$$

$$S_2' = 41 \text{ kg/m } (2.3 \text{ lb./in.})$$

Hence $S_{1_c} = 47$ kg/m (2.63 lb./in.)

$S_{2_0} = 49$ kg/m (2.74 lb./in.)

Application of Experiments on Frames to the Investigation of Wings.- The change of shape of the wings must not exceed a certain amount, fixed by aerodynamic considerations. On the other hand, the tension in the fabric must not be so high that the ribs or the rear edge of the wings shall suffer any great change in shape. On this account, there must be a certain most favorable initial tension and elongation of the fabric and, on loading, the elongation and sag must not exceed certain definite values.

These can be determined from the frame experiments. The frame is covered with the fabric to be tested, which is doped the same as on the wings, with warp and filling similarly disposed, so that the directions l_1 and l_{1R} correspond. During the application, the initial elongation and tension must be kept, as nearly as possible, the same as on the wing (dropped-ball and impression tests). This cannot be accurately accomplished and hence a computation is necessary. If

l_1, l_2, ϵ_1, ϵ_{1_0} and ϵ_2, ϵ_{2_0} hold good for the wing

and

l_{1R}, l_{2R}, $\bar{\epsilon}_1$, $\bar{\epsilon}_{1_0}$ and $\bar{\epsilon}_2$, $\bar{\epsilon}_{2_0}$ hold good for the frame,

the sag f, in the frame must then be calculated, which corresponds to the permissible tensions and elongations of the loaded wing.

In general, the following problem arises: For a given wing,

of which the aerodynamically permissible increase $\left(\frac{\Delta\rho}{\rho}\right)$ in the camber is known, a new fabric, or fabric treated in a new way, of unknown normal characteristics is to be tested on the frame.

If f_2 is the camber of the wing ribs, then, with a permissible depression f^θ in the middle of the wing,

$$\frac{\Delta\rho}{\rho} = \frac{f^\theta}{f_2 + f^\theta} \qquad (11) \qquad\qquad f^\theta = f_2 \frac{\left(\frac{\Delta\rho}{\rho}\right)}{1 - \left(\frac{\Delta\rho}{\rho}\right)} \qquad (12)$$

On the other hand

$$\epsilon_2 - \epsilon_{2_0} = \frac{8}{3} \frac{f^{\theta 2} + 2f_2 f^\theta}{l_2^2} \qquad (13)$$

in which the known camber is approximately f_2 instead of f_{2_0}.

Hence

$$\epsilon_2 - \epsilon_{2_0} = \frac{8}{3}\left(\frac{f_2}{l_2}\right)^2 \frac{\frac{\Delta\rho}{\rho}}{1 - \left(\frac{\Delta\rho}{\rho}\right)} \left(2 + \frac{\left(\frac{\Delta\rho}{\rho}\right)}{1 - \left(\frac{\Delta\rho}{\rho}\right)}\right) \qquad (14)$$

In the frame, however, we have

$$\bar{\epsilon}_2 - \bar{\epsilon}_{2_0} = \frac{8}{3} \frac{\bar{f}^2}{l_{2R}^2} \qquad (15)$$

Since the initial tension and treatment of the fabric are to be the same on both frame and wing, it is advisable to load the frame, so that, with the same sand load p,

$$\bar{\epsilon}_2 - \bar{\epsilon}_{2_0} = \epsilon_2 - \epsilon_{2_0} \qquad (16)$$

and then the permissible sag in the frame is

$$\bar{f} = f_2 \left(\frac{l_{2R}}{l_2}\right) \sqrt{\frac{\frac{\Delta\rho}{\rho}}{1 - \frac{\Delta\rho}{\rho}} \left(2 + \frac{\frac{\Delta\rho}{\rho}}{1 - \frac{\Delta\rho}{\rho}}\right)} \qquad (17)$$

Since there is the same proportional elongation perpendicular to the ribs as on the frame, we have

$$\overline{f^2} = \left(\frac{l_{1R}}{l_1}\right)^2 \left(f^{\theta 2} + 2f_{1_0} f^{\theta}\right) \tag{18}$$

whence

$$\frac{l_{2R}}{l_{1R}} = \frac{l_2}{l_1}\sqrt{\frac{1 + \frac{2f_{1_0}}{f^{\theta}}}{1 + \frac{2f_2}{f^{\theta}}}} = \frac{l_2}{l_1}\sqrt{\frac{1 + 2\,\frac{f_{1_0}}{f_{2_0}}\left(\frac{\rho}{\Delta\rho} - 1\right)}{2\,\frac{\rho}{\Delta\rho} - 1}} \tag{19}$$

Since $l_{2R} > l_{1R}$, it is advisable to use a frame of constant width l_{1R}, which, by means of a movable cross-beam, can be adjusted to the length l_{2R}. In this formula, f_{1_0} is negative and is valid only so long as $f^{\theta} > 2f_{1_0}$. Ordinarily, due to the large radius of curvature and the small distance between the ribs, the negative camber f_{1_0} is small, so that equation (19) can be applied when the additional sag f^{θ} is not too small. The frame experiments should, therefore, be used only for heavy loading. The permissible sag f, of the fabric with the load p, is best obtained from equation (17).

Here we have the tensions

$$S_1 \sim S_2 = \frac{p}{8f}\,\frac{l_{1R}^2\, l_{2R}^2}{l_{1R}^2 + l_{2R}^2} \tag{20}$$

which serve also as an approximate mean value for the tensions on the wing fabric.

With a small radius of curvature ρ_2, S_2 is, however, greater and S_1 less, than this mean value. For the demands made on the ribs S_1, are decisive or (for a varying load) the change of S_1,

while S_2 is the principal factor in determining the change of the shape of the trailing edge of the wing.

Numerical Example.- In a previous example $p = 150$ kg/m² (30.72 lb./ft.²); $f^e = 1.75$ cm (.689 in.), $f_2 = 6$ cm (2.36 in.), $f_{1_0} = -0.5$ cm (.197 in.), $l_2 = 153$ cm (60.24 in.), and $l_1 = 32$ cm (12.6 in.) The corresponding conditions for the frame experiment are to be calculated. For this purpose, we have

$$\frac{l_{2R}}{l_{1R}} = \frac{153}{32}\sqrt{\frac{1 - 0.57}{1 + 6.85}} = 1.12$$

The frame has a fixed width $l_{1R} = 30$ cm (11.81 in.) and l_{2R} is taken as 34 cm (13.39 in.). The permissible sag on the frame is $\overline{f} = 1.07$ cm (.42 in.) and the mean tension $S \sim 79$ kg/m (4.42 lb./in.).

By the above method, it is possible to estimate the sag to be expected on the wing and decide on the suitability of the fabric and the dope. We cannot expect, however, even with the arrangement of the frame described, that good agreement will always be found between the elongation and stresses on the frame and on the wing, for the relations between a flat frame and any given wing surface are so complicated, that the calculation, in cases where the N.C. of the fabric are not known, can only be broadly approximated. It is, therefore, advisable to determine the values in Table I, from experiments with a fabric of known N.C. For this purpose, some approved fabric, treated with a good dope in the usual way, is used. This is put on the frame with the usual ini-

tial tension and subjected to different loads. The values in Table I are taken from experiments with fabric B, treated with three coats of dope. In order to fix the numbers definitely, experiments were made with different dopes on the fabrics usually employed.

It is specially important, in this method, to keep within the adopted initial tension S_o. With a different initial tension S_o, which can be calculated from the dropped-ball or impression tests, the following simple transformation is necessary. Make $S_1 = S_2 = S$, $\bar{\epsilon}_1$ proportional to S, & $\bar{\epsilon}_{1_o}$ proportional to S_o. Then the additional elongation is

$$\bar{\epsilon}_1 - \bar{\epsilon}_{1_o} = \frac{8}{3}\frac{\overline{f^2}}{l_{1R}} \qquad (21)$$

while for the assumed "normal" initial tension (ϵ_{1_c}), the sag (f) can be calculated from

$$(\epsilon_1) - (\epsilon_{1_o}) = \frac{8}{3}\frac{(\bar{f})^2}{l_{1R}} \qquad (22)$$

(The values in parentheses correspond to the assumed normal initial tension.)

Hence

$$\frac{(\bar{f})^2}{f^2} = \frac{(\epsilon_1) - (\epsilon_{1_o})}{\epsilon_1 - \epsilon_{1_o}} = \frac{(S) - (S_o)}{S - S_o} \qquad (23)$$

in which

$$S = \frac{p}{8(f)}\,\frac{l_{1R}^2\; l_{2R}^2}{l_{1R}^2 + l_{2R}^2} = C\,\frac{\bar{p}}{(f)}$$

Therefore the transformed sag is

$$f = (f)\sqrt{\frac{S - S_o}{(S) - (S_o)}} = (f)\sqrt{\frac{\frac{p}{f}C - S_o}{\frac{p}{(f)}C - (S_o)}} \qquad (24)$$

EXAMPLE.- $(S_o) = 30$ kg/m (1.68 lb./in.) is assumed as the "normal" initial tension. After stretching a piece of fabric, however, S_o is found to be only 10 kg/m (.56 lb./in.) For $p = 50$ kg/m² (10.24 lb./ft.²) load, let $(f) = 10$ mm (.394 in.) be the sag assumed. How much may it be increased on account of the smaller initial tension?

$$C = \frac{0.3^2 \times 1.0^2}{8\,(\overline{0.3}^2 + 1.0^2)} = 0.0103;$$

$$f = 10\sqrt{\frac{\frac{50 \times 0.0103}{0.01} - 10}{\frac{50 \times 0.0103}{0.01} - 30}} = 10\sqrt{\frac{41.5}{21.5}},$$

if, as a first approximation, we substitute f for (f) under the root sign, (i.e. $f = 13.9$ mm (.547 in.). As a second approximation

$$f = (f)\sqrt{\frac{33}{21.5}}\,; \qquad f = 12.4 \text{ mm } (.488 \text{ in.}).$$

Consideration of the strength of the ribs and wing frame requires that, in all cases, it should be tested as to whether the values of f in Table I do not occasion too severe stresses. The mean frame tension,

$$\overline{S} = \frac{p}{8\overline{f}}\;\frac{\overline{l}_1^{\,2}\;\overline{l}_2^{\,2}}{\overline{l}_1^{\,2} + \overline{l}_2^{\,2}}$$

can also be put, approximately, for the mean value of the two principal tensions in the wing, when the distance between the ribs is $(l_1 = \overline{l}_1)$. For any other rib spacing, l_1', the transformation

$$S' = S\,\frac{l_1'}{l_1} \tag{25}$$

is sufficient (Technische Berichte, Volume III. No. 6, p.239).

The tension S_1, in the wing fabric, is usually smaller than S, while S_2, on the other hand, is greater and the differences are greater, the more the wing is cambered. For the rib strength, the calculated rib value (S') is somewhat too unfavorable, thus increasing the safety of the calculation. The straining of the rear edge of the wing will, of course, be too favorably judged by S', but, since the distribution of pressure and the initial stresses are very indeterminate, the simplified calculation is sufficient, with the customary high factors of safety.

Calculation for the Dropped-Ball Test.- Let h_0 = the height of fall; h_1, h_2 = the heights of rebound for the two fabrics to be compared.

$\varphi \sim 0.94$, a velocity coefficient for the tube friction and air resistance to the fall and rebound of the ball;

R = the radius of the ring;

S = the tension in the fabric;

δ = the mass of the fabric per square meter = $\frac{\text{weight/m}^2}{9.31}$.

On the impact of the ball, with the velocity

$$V_0 = \varphi \sqrt{2gh_0},$$

the center of the ringed-off portion of the fabric receives an impulse and executes a damped vibration with the fundamental period

$$T = 2\pi \lambda R \sqrt{\frac{\delta}{S}} \qquad (26)$$

On the return swing, the fabric has, in consequence of the damping λ, when passing through the position of rest, a maximum velocity

$$V_1 = V_0 e^{-\lambda T} \tag{27}$$

At this instant, the ball leaves the vibrating fabric and, in consequence of the unavoidable loss of energy, its height of rebound is smaller than $\frac{V_1^2}{2g}$ and, assuming the same velocity coefficient φ,

$$h_1 = \varphi^2 \frac{V_1^2}{2g} \tag{28}$$

Hence

$$\frac{V_0}{V_1} = e^{\lambda T} = \varphi^2 \sqrt{\frac{h_0}{h_1}} \tag{29}$$

and

$$\frac{h_0}{h_1} = \frac{1}{\varphi^4} e^{2\lambda T} \tag{30}$$

or the logarithmic decrement of the height of rebound is

$$\log\left(\frac{h_0}{h_1}\right) = -4 \log\varphi + 2\lambda T = -4 \log\varphi + K \lambda R \sqrt{\frac{\delta}{S}} \tag{31}$$

The height of rebound is, therefore, greater, the higher the tension and the smaller the radius of the ring, the specific gravity and the damping effect of the fabric. In comparative experiments, K and R remain the same and λ and δ depend on the fabric and especially on the dope treatment. The unstressed fabric is considered absolutely non-elastic. Since, according to experience, however, even with a tension of zero, there is still a little elasticity, a small height of rebound h' is

observed, even for $S = 0$, which may be expressed by

$$S = \frac{K^2 \lambda^2 R^2 \delta}{\left(\log \frac{h_o}{h_1 - h'} + 4 \log \varphi\right)^2} \tag{32}$$

and, when comparing two tensions S_1 and S_2 in the same fabric, by

$$\frac{S_1}{S_2} = \left(\frac{\log \frac{h_o}{h_2 - h'} + 4 \log \varphi}{\log \frac{h_o}{h_1 - h'} + 4 \log \varphi}\right)^2 \tag{33}$$

In experiments on the rebound from a glass plate of known coefficient of impact, the velocity coefficient $\varphi = 0.94$ and hence $4 \log\varphi = -0.25$. In the slack condition $(S = 0)$, the rebound was $h' = 3.5$ cm (1.38 in.).

Experiments on the same fabric, with the same boundary, showed that the heights of rebound were, in fact, in the same ratio as the height of fall. The dependence of the height of rebound on the radius of the boundary ring and on the tension can also be established by experiments.

Numerical Example.- In the comparison of two frames with fabric of the same properties, but with one sample treated with three coats and the other with only one coat of dope, the mean rebound for the first frame was $h_1 = 23.5$ cm (9.25 in.) and for the second, $h_2 =$ 14.5 cm (5.71 in.) for a height of fall of 75 cm (29.53 in.). With $\varphi = 0.94$ and $h' = 3.5$ cm (1.38 in.), we obtain the ratio of the initial tensions

$$\frac{S_o'}{S_o''} = \left(\frac{\log \frac{75}{11} - 0.25}{\log \frac{75}{20} - 0.25}\right)^2 = 2.64$$

Since K and λ are not known, S_o' and S_o'' cannot be calculated. With the slightly and with the highly stressed fabric of the previous numerical example, the heights of rebound were respectively $h_1 = 6.5$ cm (2.56 in.) and $h_2 = 23.5$ cm (9.25 in.) for a drop of 74 cm (29.13 in.) $\frac{h_o}{h_1 - h'} = 25$; $\frac{h_o}{h_2 - h'} = 3.75$. Hence

$$\frac{S_o''}{S_o'} = \left(\frac{\log 25 - 0.25}{\log 3.75 - 0.25}\right)^2 = 7.8.$$

Since the initial tension in the second fabric was determined with $S_o'' \sim 40$ kg (2.24 lb./in.), we get $S_o' = 5.15$ kg/m (.288 lb./in.) for the slightly stressed fabric, as approximately found above.

From the experiments with the highly stressed fabric with

$$S_o = 40 = \frac{K^2 R^2 \lambda^2 \delta}{(-0.25 + \log 3.75)^2}$$

we get

$$K^2 R^2 \lambda^2 \delta \sim 45. \tag{34}$$

For the same fabric with different heights of rebound h,

$$S_o = \frac{45}{\left(-0.25 + \log \frac{h_o}{h - 3.5}\right)^2} \tag{35}$$

The experiments show that in stretched fabric, a useful relation between the height of rebound and the tension can only be

established when the fabric, as is generally the case in practice, is subjected to tension in both principal directions. The height of rebound then depends on the mean tension.

Translated by
National Advisory Committee
for Aeronautics.

Figs. 1,2,3,& 4

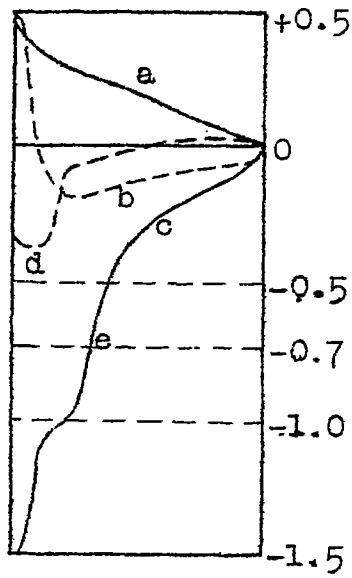

a=Positive pressure, lower side, $\alpha=+12^{\circ}$, case A
b=Negative pressure, upper side, $\alpha=-2^{\circ}$, case C
c=Negative pressure, upper side, $\alpha=+12^{\circ}$, case A
d=Positive pressure, lower side, $\alpha=-2^{\circ}$, case C
e=Mean pressure over airfoil

Fig. 1

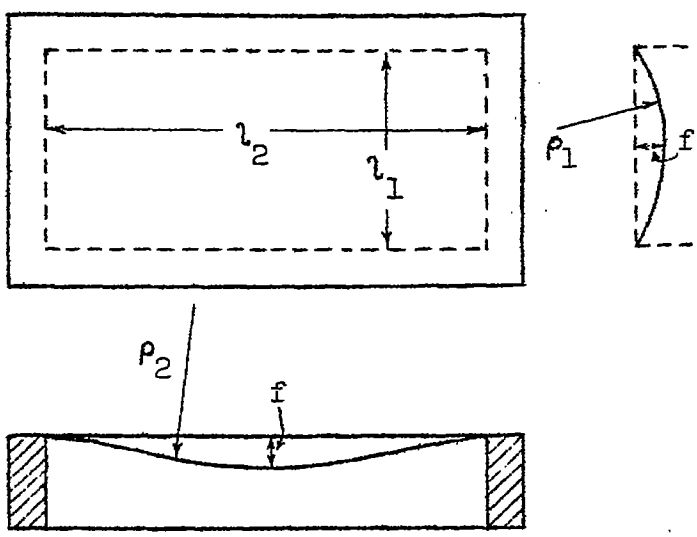

Figs. 2,3,& 4 Wooden frame for sand loading experiments

Figs. 5 & 6

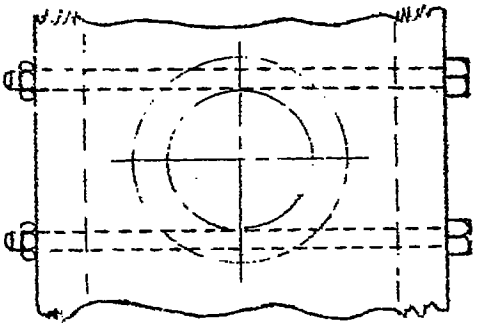

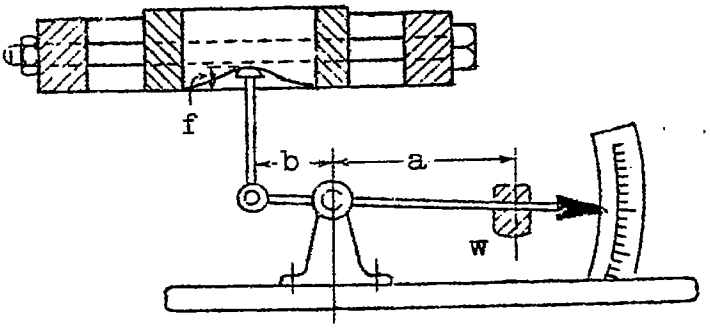

Figs. 5 & 6

Fig. 7

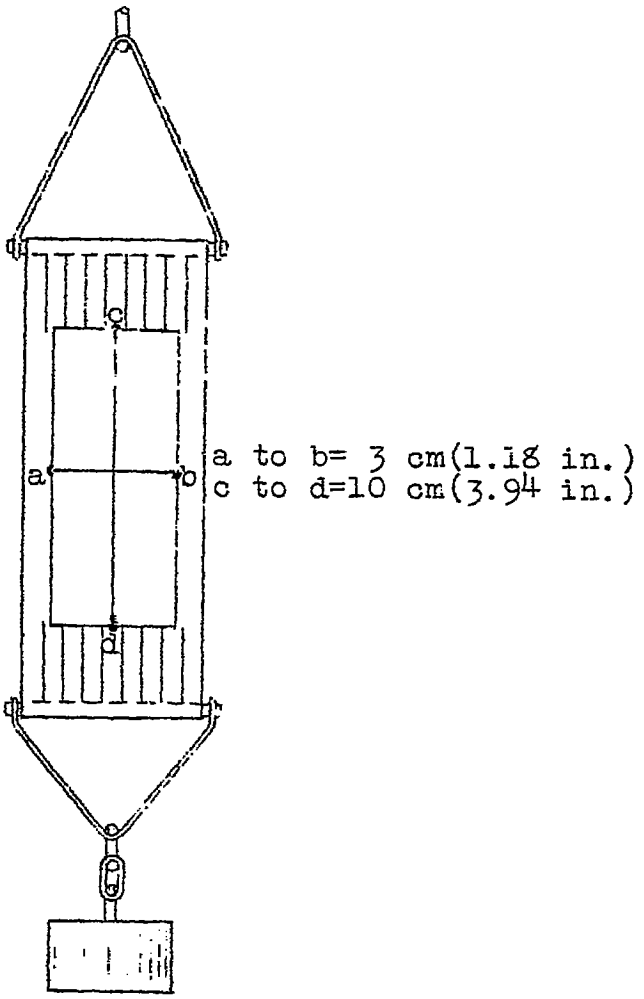

Fig. 7 Tearing test

Fig. 8

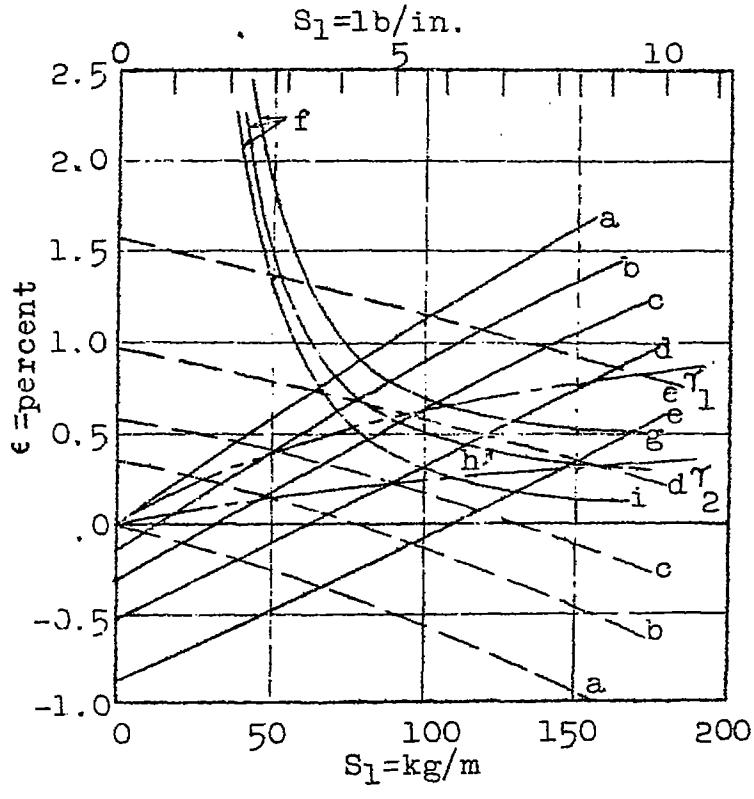

a=S_2= 0 kg/m (00.00 lb/in.)
b=S_2= 55 " (3.08 ")
c=S_2=100 " (5.60 ")
d=S_2=155 " (8.68 ")
e=S_2=267 " (14.95 ")
f=p=100 kg/m^2 (20.48 lb/sq.ft.)
g=ϵ_{1_0}=.004
h=ϵ_{1_0}=.002
i=ϵ_{1_0}=.000

Fig. 8