REPORT No. 188

THE INFLUENCE OF THE FORM OF A WOODEN BEAM ON
ITS STIFFNESS AND STRENGTH, III

STRESSES IN WOOD MEMBERS SUBJECTED TO COMBINED COLUMN AND BEAM ACTION

By J. A. NEWLIN and G. W. TRAYER
Forest Products Laboratory, Department of Agriculture

REPORT No. 188.

STRESSES IN WOOD MEMBERS SUBJECTED TO COMBINED COLUMN AND BEAM ACTION.

J. A. Newlin and G. W. Trayer.

INTRODUCTION.

This publication is one of a series of three reports prepared by the Forest Products Laboratory of the Department of Agriculture for publication by the National Advisory Committee for Aeronautics. The purpose of these papers is to make known the results of tests to determine the properties of wing beams of standard and proposed sections, conducted by the Forest Products Laboratory and financed by the Army and the Navy.

SUMMARY.

Often in airplane construction a member resisting flexure from transverse loads has a further direct stress brought upon it due to an end thrust or pull. The resultant intensity of stress at any point of the member will then be the algebraic sum of the bending stresses and the direct stress of tension or compression. Our analysis of the stresses in a wooden member subjected to axial and lateral forces will, however, be limited to the condition of combined beam and column action.

It is universally conceded that for this particular condition maximum stress is intermediate between the ultimate compressive strength of the wood and its modulus of rupture and that its value depends in some way on the ratio between the bending unit stress and the total unit stress due to both bending and direct compression.

The Army and Navy aeronautical bureaus have assumed a lineal variation of maximum stress in preparing specifications. This scheme of representing maximum stress variation by a straight line from ultimate compressive strength to modulus of rupture was adopted because of its simplicity and in the absence of any data which would show the true form of the curve. It is recognized that this maximum stress curve, even if correct, does not solve the problem of design for combined loading because maximum load does not occur simultaneously with maximum stress, but at a stress below the maximum. For example, an Euler column with a very slight side load reaches its maximum load at a stress but slightly above the fiber stress at elastic limit.

The purpose of this investigation was primarily to determine the stress which would occur at maximum load. It was found that this stress is dependent not only upon the ratio of bending and compressive stresses but also upon the stiffness of the member, therefore upon the slenderness ratio. The investigation also involved a consideration of the variation of maximum stress and particularly of the fiber stress at elastic limit.

In actual tests the maximum stress was, in general, considerably higher than the straight line assumed by the Army and Navy and the stress at maximum load somewhat below.

In some cases the stress at maximum load may be considerably below the straight-line relation generally assumed for maximum stress. However, when stress values from the two curves are taken for any ratio of bending unit stress to total unit stress and placed in the ordinary formula the estimated loads are not reduced proportionally.

A maximum load chart (fig. 7) for members of any length and with any form factor was made for Sitka spruce at 15 per cent moisture. The analysis in this report will show how, for other species, similar charts may be prepared.

PURPOSE.

The general aim in this study was to determine the stresses in a wooden member subjected to combined beam and column action. What may be considered the specific purpose,

as it relates more directly to the problem of design, was to determine the particular stress that obtains at maximum load which, for combined loading, does not occur simultaneously with maximum stress.

DESCRIPTION OF MATERIAL AND TEST SPECIMENS.

Because of the general use of Sitka spruce in aircraft construction, all test specimens used in this investigation were of this species. The material was of a mixed shipment from the west coast of the United States and Alaska. This material was partially air-dried when received at the laboratory. About half of it was immediately kiln-dried, and the balance was left to air-dry. Test specimens were made from both the air-dried and kiln-dried stock. In selecting from this shipment material for test purposes the usual Army and Navy specifications were followed, and an additional limitation as to knots and pitch pockets was adhered to, in that none were permitted, no matter how small.

Three styles of beams were used, namely, I, box, and rectangular. All 2 by 4 inch rectangular beams and all I and box beams were made in but one length for each type. This length was sufficient not only to bring the member into the Euler class but to eliminate the possibility of longitudinal shear failures or buckling of the webs due to shear. Specimens 2 by 2 inches in cross section were tested in various lengths.

The I beams were of single-piece construction. The section of F–5 L beams was left full at the load and support points whereas the Loening beams were routed throughout their length. Filler blocks were placed inside the box beams at the load and support points and the cheeks or webs were attached to the flanges with ordinary hide glue. The length of the full section for I and box beams was such that its area at the neutral surface was not less than one two-hundredths of the load at that point in pounds.

MARKING AND MATCHING.

In order to determine the law of the variation in stress, as the ratio of bending stress to total stress varied from zero to unity, it was essential that the properties of the material in any member being tested be definitely known. Therefore all the test pieces were carefully matched with standard specimens 2 by 2 inches in section which were used to determine these properties, such as compressive strength parallel to the grain, modulus of rupture, etc. When a test beam was cut from a plank these 2 by 2 inch standard specimens were cut from the balance of the material in sufficient number to insure a knowledge of the mechanical properties of the material in the test beam.

METHOD OF TEST.

ECCENTRIC LOADING.

All the eccentric loading tests were made on specimens 2 by 2 inches in cross section with the apparatus shown in Figure 1. The L-shaped casting which is clamped to the end of the column fits into a movable plate resting on a rocker carriage supported on knife-edges. Pairs of holes in the casting spaced every one-half inch fit into taper pins set in the movable plate, and intermediate adjustments can be made by means of a screw passing through the movable plate. In setting any given eccentricity preliminary trial runs were made to determine the position of zero eccentricity. Adjustments were made if the member deflected under loads approximately up to the elastic limit. The required eccentricity was then set by means of the vernier screw, by setting the L-shaped castings over another set of taper pins in the movable plate, or by a combination of the two. The column length is from knife-edge to knife-edge or out to out of L-shaped castings.

COLUMN WITH LATERAL LOAD AT CENTER.

The apparatus used to apply such a combined loading is shown in Figure 2. End load was applied with the same apparatus used for eccentric loading. Preliminary trials were made to determine the position of zero eccentricity, after which the side-load apparatus was attached. The side load was applied by means of weights arranged as shown in the photograph.

COLUMN WITH LATERAL LOAD AT THIRD POINTS.

Figure 3 is a sketch of the first apparatus used to apply end load simultaneously with third-point lateral load. An operator at the handwheel attempted to maintain a specified

ratio of side load to end load by continually observing the dynamometer while the operator running the testing machine called off loads. It was practically impossible for the two operators to keep together immediately after the maximum load was passed, at which time the load might fall off very rapidly. To eliminate this difficulty the apparatus shown in Figure 4 was constructed. As shown in the sketch the testing machine, by means of the lever and bell crank, supplies the side load as well as the end load and the relation of the lever arms fixes the ratio. This apparatus was far more satisfactory than the one first used.

The beams of standard I and box section were prevented from bending in more than one plane by using pin-connected horizontal ties as shown in Figure 5.

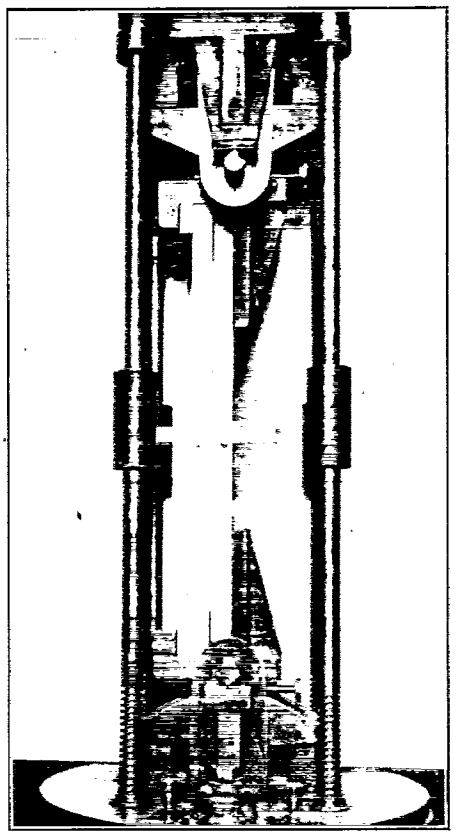

FIG. 1.

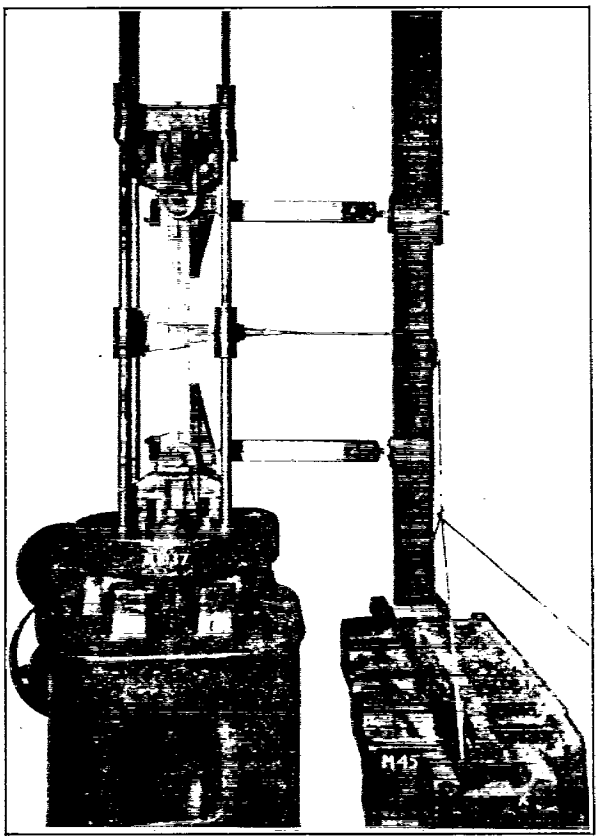

FIG. 2.

FIGURES.

Figure 1.—This is a photograph of the apparatus used to apply an eccentric load to columns 2 by 2 inches in cross section.

Figure 2.—This photograph shows the same apparatus used for applying an eccentric load, but with an additional attachment for applying a lateral load at the center of the specimen. The two reaction arms are adjustable in length. The wire supporting the weights is attached to a stirrup, which is fastened to a wooden bearing block. The wire for observing deflections is attached to pins set in holes in the L-shaped castings. It will be noted that the span for side load and the column length are not equal.

Figure 3.—Figure 3 is a diagram of the first apparatus used for applying combined loading to large members. The large reaction frame was supported by a wire passing over two pulleys to a counterweight. Side load was applied at the third points by means of the hand screw and end load by the testing machine. The side-load span and column length are not equal.

Figure 4.—This is a sketch of the second apparatus used for applying combined loading to large members. With this arrangement the testing machine applies the end load and by the lever attachment part of this is transmitted as side load. Any ratio of side load to end load can be obtained by simply changing the ratio of the lever arms. The large reaction frame was supported by a counterweight

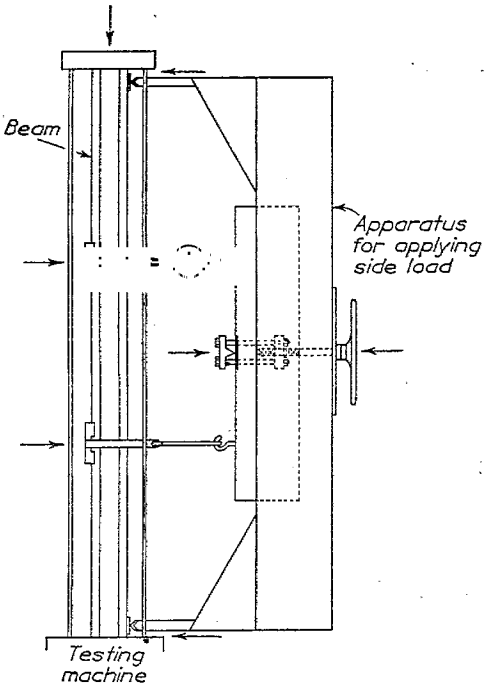

FIG. 3.—Diagram of first apparatus for applying combined loading.

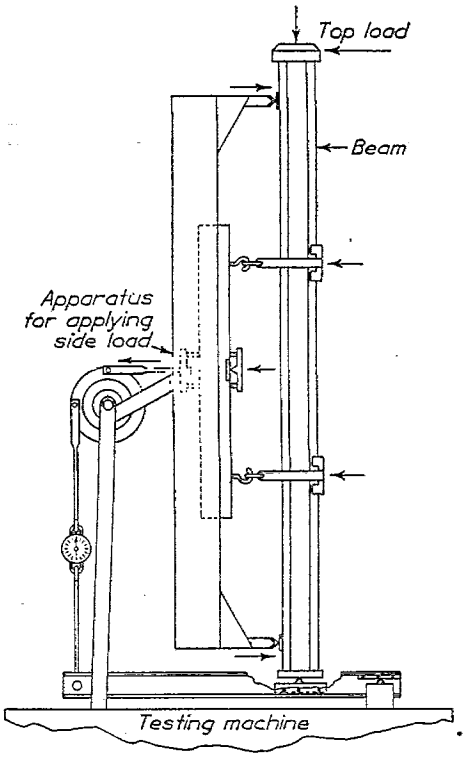

FIG. 4.—Diagram of second apparatus for applying combined loading

Figure 5.—This is a photograph of the horizontal ties used to prevent buckling in more than one plane. When the ratio of the moment of inertia of a cross section about a horizontal axis to that about a vertical axis is large the member will tend to buckle laterally. This must be prevented, since in service airplane wing beams are restrained from buckling sidewise, and such buckling would cause a considerable reduction in load.

FIG. 5.—Horizontal ties used to prevent bending in more than one plane.

Figure 6.—This figure shows three combined-loading stress curves. The elastic-limit curve and the maximum-stress curve are general curves for Sitka spruce at 15 per cent moisture. The maximum-load curve is for a particular column selected only for illustrative purposes. It is for a column of the material indicated and of such a length that the Euler load divided by the area is equal to 2,000 pounds per square inch.

Figure 7.—Figure 7 is a chart for determining maximum-load modulus for members subjected to combined beam and column action. It has been constructed for Sitka spruce at 15 per cent moisture.

Figure 8.—This figure shows the connection between the $\left(\frac{P}{A}-\frac{l}{r}\right)$ curves for columns and the corresponding stress-strain diagrams. The upper curve is for Sitka spruce and the lower for mild steel.

Figure 9.—This figure shows the results of an actual test of an eccentrically loaded column and stress values computed from properties of a specimen matched with this column. The full line represents actual values from test and the dotted line, computed values.

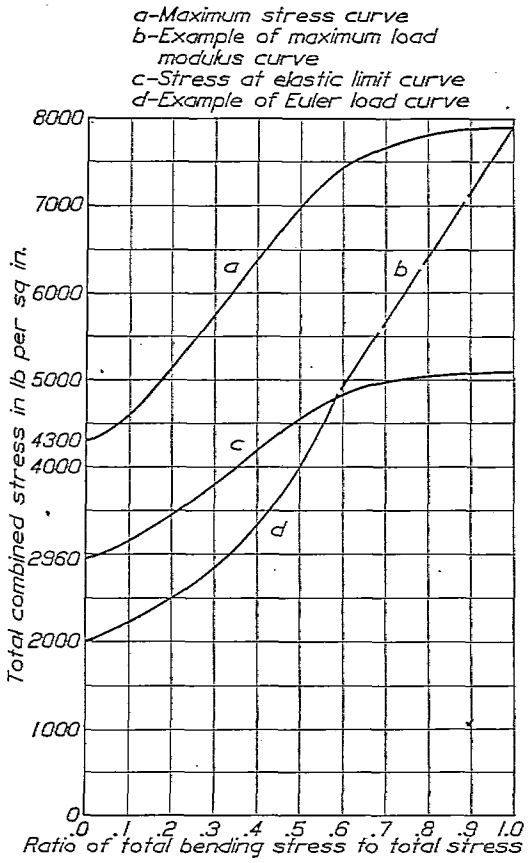

FIG. 6.—Stress curves for combined bending and compression. Unity form factor, Sitka spruce 15 per cent moisture. Example of maximum load modulus for a member such that $\frac{\pi^2 E}{\left(\frac{l}{r}\right)^2}=2000$ lb./sq. in.

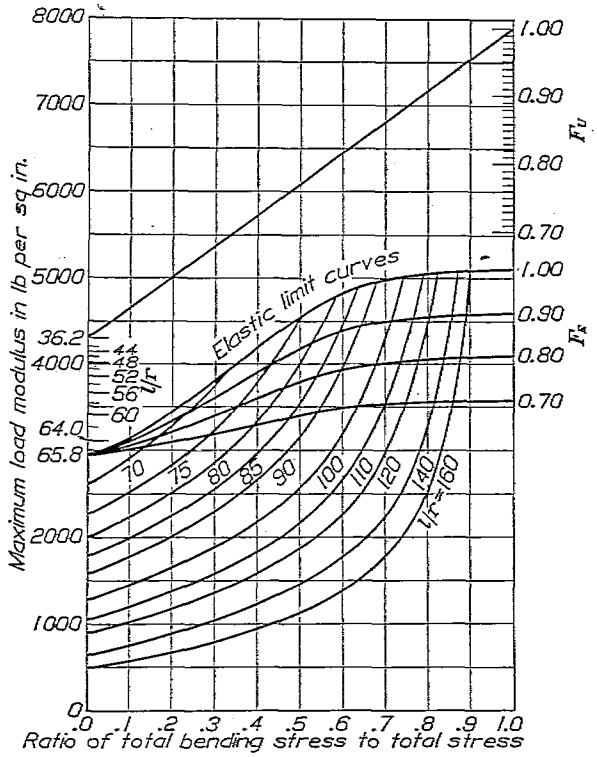

FIG. 7.—Chart for determining maximum load modulus for combined bending and compression. Sitka spruce 15 per cent moisture. Directions: $l/r<65.8$. Given l/r and F_U, a straight line between l/r (on the left) and F_U (on the right) will give the maximum load modulus for various ratios of total bending stresses to total stresses. For $\frac{l}{r}<36.2$ use 36.2. For $l/r>65.8$. Given l/r, F_E, and F_U, find intersection of the F_E curve with the particular l/r curve. The straight line between this intersection and F_U will give the maximum load modulus for all conditions of combined loading.

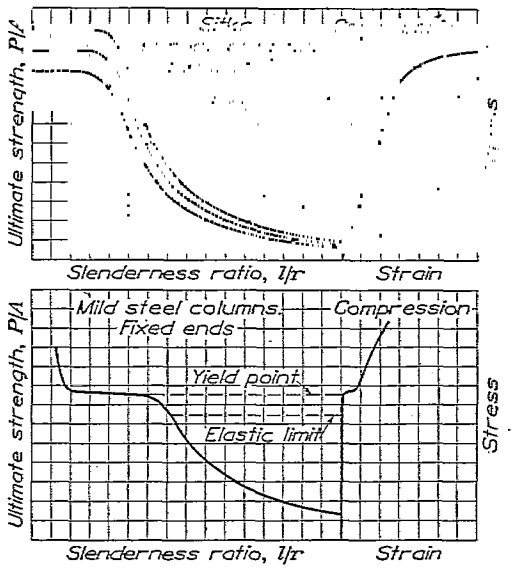

FIG. 8.—Relation of (P/A, l/r) curve to compression stress-strain curve.

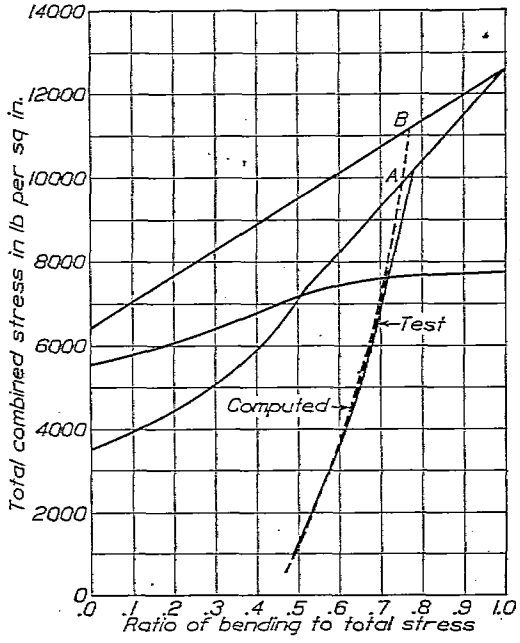

FIG. 9.—Combined stress eccentrically loaded column. Sitka spruce 1.9 by 1.9 by 40 inches. Eccentricity 0.25 inch. EI 2,070,000. Difference in stress, A and B, 13.2 per cent. Difference in estimated load for A and B, 4.1 per cent.

ANALYSIS.

It was not the purpose of this investigation to make a comparison of the methods for calculating fiber stresses within the elastic limit in a wooden member subjected to combined column and beam action. For the most part formulas in general use are sufficiently accurate within the elastic limit. The design problem for which a solution was sought has to do with stresses beyond the elastic limit, namely, the stresses at maximum load for various ratios of bending stress to total stress. It was found that a complete understanding of the variation in stress at maximum load involves a consideration of the variation of maximum stress and of fiber stress at elastic limit as well. It is generally conceded that maximum stress in a column with a lateral load is intermediate between the ultimate compressive strength of the wood and its modulus of rupture and that the intermediate value should depend in some way on the ratio between the bending unit stress and the total unit stress. By bending stress is meant the total bending stress due to the moment of the lateral load and the product of the end load and deflection. In the absence of any data which would show the true form of the curve and because of its simplicity a straight-line variation from ultimate compressive strength to modulus of rupture was adopted by most aircraft designers. The maximum-stress curve has been found to be something other than a straight line; but even if it were, it does not solve the problem of design for combined loading by any means because, for any condition of combined loading, maximum load does not occur simultaneously with maximum stress but at a stress below the maximum.

In eccentric or any other form of combined loading we have this order of occurrence: Fiber stress at elastic limit, maximum load, maximum stress, and finally maximum moment. In a centrically loaded Euler column deflected to the elastic limit we have fiber stress at elastic limit occurring simultaneously with maximum load. In a beam with lateral loads only, maximum load, maximum stress, and maximum moment occur simultaneously.

Let us consider an Euler column. At the critical load if deflected slightly it will maintain this deflection; if deflected more it will still hold the same load. The deflection can be increased with the same load until the elastic limit is reached, after which the load will fall off rapidly but the deflection will increase more rapidly. Stresses calculated for conditions immediately after maximum load was passed will be greater than the stress at maximum load. With a very slight side load an Euler column reaches its maximum load at a stress but slightly above the fiber stress at elastic limit. Further, let us consider this Euler column to be without deflection when centrically loaded with the critical load. The stress in the column is then simply the load divided by the area. But this stress is by no means equal to the ultimate compressive strength of the material. For a ratio of bending stress to total stress of zero we are not justified then in using maximum compressive stress as the stress at maximum load. The solution of the problem hinges on the fact that stress at maximum load is not only dependent upon the ratio of bending to total stress but also upon the stiffness of the member, therefore upon the slenderness ratio.

ELASTIC LIMIT STRESSES.

In presenting the subject of stress variation in combined loading as the ratio of bending to total stress increases from zero to unity it is advisable to begin with the elastic-limit curve, then to consider the maximum-load curve and finally the maximum-stress curve.

Let us first consider a column with a rectangular cross section which will have a unity form factor. As pointed out in Part II of this report, the elastic limit in compression parallel to the grain is less than the elastic limit in bending. For Sitka spruce at 15 per cent moisture the former would be around 2,960 pounds per square inch and the latter 5,100 pounds per square inch. Let us further confine our attention for the moment to a member with a slenderness ratio that will make the Euler load divided by the area equal to 2,960 pounds per square inch. In other words, the column is just within the Euler class for spruce at 15 per cent moisture for which the modulus of elasticity is equal to 1,300,000 pounds per square inch and we have

$$\left(\frac{l}{r}\right)^2=\frac{\pi^2 E}{f}$$

where f=fiber stress at elastic limit. Hence $\frac{l}{r}$ for the conditions assumed equals 65.8.

Now, for any condition of combined loading the fiber stress at elastic limit of this column is intermediate between 2,960 pounds per square inch and 5,100 pounds per square inch. A curve showing this relation was plotted, using the principle of the supporting action as developed in Part II on form factors. This curve marked elastic-limit curve is shown in Figure 6. On the right we have the elastic limit in ordinary bending, for which condition we assume that the surface with zero stress is at the half height. As some direct compression is introduced this surface of zero stress moves toward the tension side until for equal bending and compressive stresses it is on the extreme fiber of the member and for greater ratios of compressive stress to bending stress it is outside the beam entirely.

The stress at elastic limit in the extreme layer of fibers, as has been previously pointed out in Part II of this report, is a variable dependent upon the support received from fibers which are either less stressed in compression or are in tension. It is obvious that a shift of neutral surface will result in a new distribution of stress concomitant with which will be a relative change in supporting action. The difficulty lies in evaluating the supporting action for conditions for which the neutral surface is not at the mid height of the beam.

Assume a member with rectangular section and unity form factor. Let the member be subjected to a slight axial compression as a lateral load is applied, in which case the neutral surface will be a little below mid height. Our supporting action is no longer a maximum, consequently our elastic-limit stress will drop off. But how can we determine our supporting ratio K for this condition? The distance from the extreme compressive fiber to the neutral surface may be considered as the half height of a theoretical beam with but one flange, and that flange is the member in question. As a matter of fact, in calculating the form factor for beams of unequal flanges double the distance from the neutral axis to the most remote compression fiber is a somewhat more accurate quantity to use in the formula than the height of the section. The difference, however, is usually unimportant. It remains then to determine the ratio of flange depth to total depth of the theoretical beam for various ratios of bending to total stress, after which K can be taken directly from the supporting action curve as outlined in Part II.

In the following sketch let

$\frac{h'}{2}$ = the half height of the theoretical beam,

$\frac{h}{2}$ = the half height of the member in question,

b = the total bending stress,

c = the direct compressive stress.

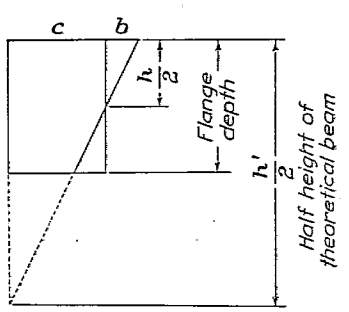

From similar triangles

$$\frac{b}{h/2}=\frac{b+c}{h'/2} \text{ or } \frac{h}{h'}=\frac{b}{b+c}$$

In other words, the ratio of flange depth to total depth of the theoretical beam is the total bending stress over the total stress. Taking the web thickness of our single-flanged theoretical beam as zero the elastic-limit form-factor formula will reduce to $F_E=0.58+0.42\ K$. In order to determine the elastic-limit stress we take the elastic-limit stress in ordinary bending, compute the form factor of the theoretical beam for a particular ratio of bending stress to total stress, and the product of the two is our stress for this ratio. In the limit of all direct compression and no bending stress F_E becomes 0.58 and our elastic-limit stress in compression parallel to the grain bears the same relation to the bending elastic-limit stress as outlined in Part II. The elastic-limit curve shown in Figure 6 was constructed in this manner. F_E = elastic-limit form factor.

If the member being considered had a form factor in itself the 2,960 would remain the same but the 5,100 would be lowered. To take a specific case, let us assume a 0.90 form-factor at elastic limit for the member in question. Our elastic-limit stress in bending would then become 4,590.

pounds per square inch and the constants of the formula $F_E = 0.58 + 0.42\ K$ would be changed. Our first constant would have to be $2{,}960 \div 4{,}590 = 0.645$ and our formula would read $F_E = 0.645 + 0.355\ K$. The elastic-limit curves for form factors less than unity as shown in Figure 7 were constructed in this manner. This method can readily be applied to material of any other species or under any condition by a corresponding change of constants.

A great many tests were run on members with elastic-limit form factors ranging from unity to 0.68. The test data were all plotted with the total stress against ratio of bending to total stress. Elastic limits were determined from a moment deflection graph. Elastic-limit curves were plotted on the sheet upon which total stress had been plotted against ratio of bending-unit stress to total stress and it was found that the stress at elastic limit as determined by the intersection of the two curves checked the stress as determined from the moment deflection curve within the limits to be expected with careful matching of material.

STRESSES AT MAXIMUM LOAD.

We are now prepared to consider the maximum-load condition for various ratios of direct and bending stresses. For convenience let us first confine our attention to a member falling in the Euler class. Obviously the Euler load is the maximum load which we can obtain for a zero ratio of bending unit stress to total unit stress, and the stress at this load must be equal to or less than the elastic-limit stress in compression parallel to the grain. Let us suppose that we have a member for which this stress is 2,000 pounds per square inch and the properties of the material are as indicated in Figure 6. If the column were deflected a little it would still carry the Euler load, but a bending stress would be introduced. Deflection would increase until the elastic-limit was reached and the total stress would follow the curve indicated in Figure 6 to the intersection with the elastic-limit curve. This intersection represents then the stress in an axially loaded Euler column when deflected to the elastic limit. The stress at maximum load under eccentric or other combined loading would always have to be greater than this Euler column stress. This intersection is the starting point for stress at maximum load and the stresses for any condition of combined loading will be intermediate between this value and the modulus of rupture. Experiment has shown that if stresses taken from a straight line connecting these two points are substituted in the ordinary formula the maximum-load values thus obtained will be within the limits of precision of the ordinary test.

A series of combined loading tests were run on members of various lengths with modulus of rupture form factors ranging from unity to 0.62. Total stress as determined from observed loads and deflections was plotted against ratio of total bending stress to total stress. The scheme of representing the variation of maximum-load values by a straight line was adopted subsequent to the analysis of over 300 such tests.

So far in our consideration of the stress at maximum load we have confined our attention to members in the Euler class. Let us now consider short columns. The Euler formula holds within the elastic limit of the material. The shortest or critical Euler length is therefore obtained by substituting fiber stress at elastic limit for P/A in the formula

$$\frac{P}{A} = \frac{\pi^2 E}{\left(\frac{l}{r}\right)^2}.$$

For Sitka spruce at 15 per cent moisture for which the fiber stress at elastic limit in compression parallel to the grain is 2,960 pounds per square inch this limiting slenderness ratio is 65.8. The first question for consideration is that of maximum load for perfectly straight, centrically loaded columns whose slenderness ratio is less than 65.8. After the elastic limit is passed, there is a gradual change in stiffness which is equivalent to a reduction in modulus of elasticity. If in Euler's formula we substitute a given stress and the corresponding modulus of elasticity, we obtain an l/r for this stress. The idea of change in modulus of elasticity is not new, and various assumptions have been made as to the nature of this change after the elastic limit has been passed. Remarkably close agreement with test results was

obtained when it was assumed that the specimen remained straight up to the maximum load, and that the modulus of elasticity remained constant across the cross section and was equal to the unit stress at any instant divided by the total unit strain at the same instant.

Many column formulæ for intermediate columns have been advanced, but practically all of them give maximum-load values too small for wooden columns. Practically all of these are empirical formulæ based on experimental failure loads. Experimental values are universally plotted with failure load per unit area $\left(\frac{P}{A}\right)$ as ordinates and slenderness ratio $\left(\frac{l}{r}\right)$ as abscissae. The resulting $(P/A-l/r)$ diagram shows the variation in ultimate strength with variation in the relative length. Now P/A depends upon a great many other factors than l/r, so that experimental results appear as a milky way of points, the shape and area of which is dependent upon the kind and variation in quality of material and the imperfections in the test conditions. In Figure 8 the shaded portion of the column curve for wood represents an area in which 50 per cent of the points will fall and the full line, average values for this particular material when experimental conditions for all specimens are kept within the precision easily obtainable. This curve and the one below it for mild steel exhibit certain peculiarities, depending on the material and end conditions. Under ideal conditions it will be slightly higher and its shape will probably depend entirely on the properties of the material which suggests a direct connection between it and the stress-strain diagram. Hence it is possible to predict from a stress-strain diagram as shown in Figure 8 the shape of the $(P/A-l/r)$ curve, the modulus of elasticity being taken for any stress as simply y/x from the stress-strain curve.

The curve for Sitka spruce shown in Figure 8 is closely approximated by a parabolic curve tangent to the Euler curve at the elastic limit and having its apex on the axis of ordinates at a value equal to the maximum crushing stress as determined by test.

The equation of such a curve is

$$S=F-(F-f)\left(\frac{\frac{l}{r}}{\sqrt{\frac{\pi^2 E}{f}}}\right)^{\frac{2f}{F-f}}$$

where

S = stress at maximum load,
F = maximum compressive strength of the material,
f = the elastic limit in pounds per square inch,
l = length of the column in inches,[1]
r = radius of gyration in inches,
E = modulus of elasticity.

Now for air-dry Sitka spruce the elastic limit in compression parallel to the grain is approximately 80 per cent of the maximum crushing strength and the curve represented by the above equation becomes an eight-power curve. This equation would give maximum load values for short columns considerably above those given by any formula previously advanced. Maximum-load values obtained by test have substantiated our assumption and have proved that for short wooden columns all existing formulas give results too low.

For some of the other species and under other conditions the power of the above equation would be less than for dry Sitka spruce, and to make the load curve for short columns safe under all conditions we have adopted a fourth-power equation, which is equivalent to assuming that the elastic limit is two-thirds of the maximum crushing strength. The fourth-power curve is still above all other curves ordinarily used, and the difference between it and the eight-power curve is not great, whereas the difference between it and Johnson's second-power curve is considerable. It must be remembered, however, that this only applies to wood in which there is a very gradual breaking of the stress-strain curve at the elastic limit, and that this curve is usually a smooth curve without points of contraflexure to maximum stress.

[1] For continuous beams, length is taken between points of contraflexure or between a point of contraflexure and an end support. For members, simply supported, length equals the span.

Now $\sqrt{\frac{\pi^2 E}{f}}$ = the critical slenderness ratio which may be written $\frac{l'}{r'} = C$. By our assumption that the fiber stress at elastic limit is two-thirds of the maximum compressive stress our equation becomes

$$S = F - \frac{F}{3}\left(\frac{x}{C}\right)^4$$

where x is the l/r of the short column.

In obtaining the stress at maximum load for short centrically loaded columns in the preparation of the curves shown in Figure 7 the fiber stress at elastic limit was taken as 2,960 pounds per square inch. It is recognized that the value 4,300 pounds per square inch given for Sitka spruce is not for a column of zero $\frac{l}{r}$ but for columns of some considerable length. Therefore the F in the preceding formula was taken as the value of which 2,960 was two-thirds or 4,440 pounds per square inch. For all practical purposes, however, the stress at maximum load for all centrically loaded columns whose slenderness ratio $\frac{l}{r}$ is 36.2 or less may be taken as 4,300 pounds per square inch.

Having once established the stress at maximum load for short centrically loaded columns, we have the starting points of maximum-load curves for such members subjected to combined loading. Tests show that a straight line connecting the stress at maximum load for a short column and the modulus of rupture of the member in ordinary bending will give values which when substituted in the ordinary formula will give maximum loads within the limits of precision of the ordinary test.

The foregoing discussions show that the stress at maximum load may occur anywhere within the area between the fiber stress at elastic-limit curve (fig. 7) and the straight line joining the maximum crushing strength and the modulus of rupture, depending upon the slenderness ratio and the ratio of total bending stress to total stress.

In some cases the stress at maximum load may be considerably below the straight-line relation generally assumed for maximum stress. An examination of Figure 9 will show that though there be a considerable difference in stresses it does not mean that loads estimated by the two curves will differ as widely. The dotted line (fig. 9) represents computed total stresses in a 2 by 2 inch member 40 inches long eccentrically loaded. The stress at B is 13.2 per cent higher than at A, but loads estimated from the two stresses differ by only 4.1 per cent. The full line shows the results of an actual column test, while the dotted line represents values computed from properties of a specimen matched with this column.

MAXIMUM STRESS.

We now have left for our consideration the maximum-stress curve, which from the design standpoint, at least, is of less importance than either of the two already considered. It is generally conceded that for combined loading maximum stress is intermediate between the ultimate compressive strength and modulus of rupture. Just what the variation is between these two points, as far as we have been able to learn, has never been determined, nor does it appear to us to be of great significance, because maximum stress occurs after maximum load is passed. A little discussion, however, may be of interest.

In computing the maximum stress for combined column and beam action it is essential to take into account the shift in the neutral axis after the elastic limit of the material has been passed. At every section of a wooden member where the stress exceeds the elastic limit the neutral axis shifts away from the compression side. Under such a condition the column may be considered analogous to one made of material varying in modulus of elasticity across the section. The point of resistance to the end load is not at the geometrical axis of a section of such a member but between it and the edge with the material of the greatest elasticity; in fact, it lies on the neutral axis of ordinary bending. In a wooden column with the material on one side breaking down in compression and suffering a reduction in modulus of elasticity

we have an analogous condition. The point of resistance moves out of the geometrical axis away from the compression side. A line connecting all such points of resistance throughout the length of the column may be called the line of resistance, and the end load will act along this line. The moment arm of the end load is then the deflection measured from the line of the loads to the line of resistance. In determining maximum stress from our test data the shift of the point of resistance was added to the deflection of the geometric center.

Our tests have shown that the variation between maximum crushing strength and modulus of rupture is not lineal, but that a curve constructed along the principles outlined for the elastic-limit curve agrees very closely with test results. F_u = modulus of rupture form factor. $F_u = 0.50 + 0.50\ K$ could only be used when the compressive strength parallel to the grain is just half the modulus of rupture. For any other relation the first constant will be compression parallel divided by the modulus of rupture and the second constant unity minus the first constant.

CONCLUSIONS.

The following conclusions have been arrived at relative to the stresses in a wooden member subjected to combined beam and column action:

Maximum stress is intermediate between the ultimate compressive strength of the wood and its modulus of rupture, and the intermediate values depend upon the ratio between the total bending stress and the total stress. This variation is not lineal.

The maximum-stress curve can not be used in design for the determination of the factor of safety, since maximum load and maximum stress do not occur simultaneously.

The stress at maximum load is dependent not only upon the ratio of bending and compressive stresses but also upon the stiffness of the member, therefore upon the slenderness ratio.

For members in the Euler class a straight line between the stress which would obtain if the member were axially loaded without side load and deflected to the elastic limit and the modulus of rupture of the member will give stresses for maximum load which when substituted in the ordinary formula will give maximum-load values within the limits of precision of the ordinary test.

For other than Euler columns with lateral loads the line should connect the stress at maximum load as a column and their modulus of rupture.

The strength of columns of intermediate length is dependent upon the stiffness of the material after the elastic limit has been passed. From a stress-strain diagram it is possible to predict by a modified Euler formula the maximum load for columns in this class.

In some cases the stress at maximum load may be considerably below the straight-line relation generally assumed for maximum stress. However, when stress values from the two curves are taken for any ratio of bending to total stress and placed in the ordinary formula the maximum-load values are not reduced proportionately.

The elastic limit of members under combined loading is intermediate between the elastic-limit stress in compression parallel to the grain and the elastic limit of the member in ordinary bending. This variation is not lineal.