Copy 1

[redacted]

TECHNICAL NOTES

NATIONAL ADVISORY COMMITTEE FOR AERONAUTICS.

Library L.M.A.L.

No. 213

DISCHARGE CHARACTERISTICS OF A HIGH SPEED FUEL INJECTION ENGINE.

By Robertson Matthews
Langley Memorial Aeronautical Laboratory.

FILE COPY
~~To be~~ returned to
the files of the Langley
Memorial Aeronautical
Laboratory

February, 1925.

NASA Technical Library
3 1176 01425 6011

NATIONAL ADVISORY COMMITTEE FOR AERONAUTICS.

TECHNICAL NOTE NO. 213.

DISCHARGE CHARACTERISTICS OF A HIGH SPEED FUEL INJECTION ENGINE.

By Robertson Matthews.

Summary

This paper deals with some discharge characteristics of a fuel injection system intended primarily for high speed service. The system consisted of a cam actuated fuel pump, a spring loaded automatic injection valve and connecting tube. The pump was provided with two ball inlet valves, but no discharge valves, and was operated at speeds of from 600 to 1800 R.P.M. The data were taken by spraying on blackened paper attached to the side of the flywheel rim. Patterns were thus formed on the paper, a single record pattern being the result of a number of discharges. From oscilloscope observations, it is believed that the discharges during each run were fairly uniform.

The spray patterns showed the beginning of discharge to be definite while the end was drawn out and somewhat indefinite. For any given R.P.M. the lag of the jet was nearly constant for different lengths of plunger stroke. Discharge continued for a considerable interval after the plunger stroke was completed.

Introduction

The injection pump used in this work was part of the equipment

for a research on the air consumption of a two-stroke cycle engine, for aeronautical purposes, using a Roots blower for supplying scavenging air. Owing to the short interval available for injection, some definite information was necessary concerning when and how long injection occurred. This injection research was, therefore, undertaken. Though the information obtained was primarily intended for aeronautical engine use, it is applicable to any engine which this type of pump might serve. Runs were made to determine:

(a) The lag of the jet behind the beginning of the discharge stroke of plunger.

(b) The interval of injection.

(c) The interval during which discharge continued, due to resilience of the injection system and of the fuel, after the cam had reached its position of maximum lift.

(d) The definiteness of starting and stopping of injection.

(e) Indications of variations in rate of discharge and tendencies of nozzle valve to rebound.

All time intervals are recorded in degrees of crank travel with top dead center (end of compression stroke) taken as a datum point. All discharge was into room atmosphere. The fuel used was a mixture of 50% each of domestic aviation gasoline and benzol.

Variables incorporated in the runs were: (1) R.P.M.; (2) length of pump stroke (representing change in volume discharged); (3) primary pressure (on supply line to injection pump);

(4) spring load on nozzle (opening pressure); (5) cross-section of discharge orifice; (6) controlled and uncontrolled valve lift.

Method

The data were obtained from spray patterns and have been plotted with an attempt to make it largely self-explanatory. The method of obtaining the spray patterns was the same as used in getting the data of Technical Note No. 159 (Ref. 1). Plain news-print paper was fastened with shellac to the side of the flywheel rim, and covered with lampblack. The pattern was registered by the washing off of the lampblack and also by the different amounts of erosion of the paper due to spray impact. The nozzle was removed from the engine cylinder and attached to a bracket that held the tip of the nozzle 3/32" from the paper, and lined up to let the jet hit the flywheel on a line through the top dead center mark on the engine frame as shown by Fig. 5. A sheet iron deflector was held between nozzle and paper till the pump stroke setting was made; it was then removed, by hand, and again replaced after a number of "shots." The spray was thus permitted to strike the paper during a number of revolutions corresponding to time intervals of 3, 5, 10 and 15 seconds, depending on the R.P.M, and the amount of impact the paper would stand without tearing in a manner to obscure the variation in rate of fuel discharge. The deflector can be dispensed with when only the beginning and ending of the injection interval are sought, but

when it is desired to observe variations during the discharge stroke, such as intensity of discharge and tendencies for the nozzle valve to rebound, then the deflector is necessary in order to prevent superimposing long and short stroke discharges during stroke adjustment.

Determinations of the number of degrees of crank travel over which spraying occurred were made from graduations on the flywheel rim on opposite side from the target. Readings for the beginning of the patterns are probably accurate to within 0.5 degree. Owing to the character of the patterns no such accuracy can be stated for the determinations of the end of discharge.

There were two forms of pattern: that from a small discharge and that from a large discharge. The former were wedge-shaped, being wide at the beginning. The latter were fairly uniform in width throughout, and may, in general, be described as composed of two main parts. There was a heavy portion giving unmistakable evidence of a jet with considerable penetrating power even though impact had already occurred upon the nozzle lip, integral with the orifice piece. The ending of this heavy portion would round or taper off, sometimes both, within a range of about 3 or 4 degrees. Then would follow the tail of the pattern where the lampblack would be washed off progressively less and less until the pattern changed from gray white to a just perceptible dark gray. Contrasted with the erosion of the paper it seems as though this trailing end amounted in some cases to little more than the wash off the nozzle lip, particularly

where the tail is long drawn out. For, with 1800 R.P.M. and discharges occurring during an interval of 3 seconds, ninety shots would register on the paper; and these left the trailing end but a dull gray record.

It is probable that the long continuance of the pattern, after the heavy portion had registered, was not due to the quantity of the discharge, but to the slow speed of discharge, as the nozzle valve was seating. Observations with an Elverson oscilloscope to check this statement have shown the trailing end of the jet from a 0.040" orifice with no intercepting impact lip to be a short, thin stream of such low velocity that it broke up into small, twisted bars. Hence, it may be well to keep in mind that these plots, being on a time basis, do not truly represent the percentage of fuel dribbled; a curve based on the weights of successive increments of discharge would be necessary for a fairly true representation of the percentage of dribbling. Superimposed plots (Fig. 28) showing the records when the spray was directed to meet the on-coming paper and when directed to follow the paper, show that "wash" of fuel along the side of the wheel rim was not responsible, apparently, for any appreciable amount of the trailing end of the pattern. The centrifugal force threw off both fuel and the washed-off lampblack.

Wear of engine and pump parts did not permit using the original zero marks for timing the pump cam so as to be at maximum lift (end of discharge stroke) when the engine crank was at top dead center. A new setting was necessary to get that relationship. To determine

the several points of cam contact corresponding to different sleeve settings (for different length of plunger stroke) feelers were used; the necessary allowance for thickness of feeler was readily made by means of the pump stroke graduations on the sleeve.

Apparatus

The Injection System.- The injection system included an injection valve, opened automatically by the pressure created by an injection pump, which, in turn, was supplied with fuel by a primary pump. This installation had, therefore, a low pressure or primary fuel line, for which ordinary copper tubing was used, and a high pressure or secondary line, for which 3/16" steel tubing, with 3/32" bore, was used. The arrangement of the primary system is shown diagrammatically in Fig. 8. The pressure in the primary line, recorded on the plots as P_p, was regulated by a by-pass relief valve; that in the secondary line was determined, at the beginning of discharge, by the spring tension on the nozzle valve, recorded on the plots as P_s. Due to the resistance of these small orifices a greater pressure than P_s is, however, required to give discharge at the desired rate. The secondary or injection pressure is, therefore, a variable; it can vary with R.P.M. and with the rate of change of cam contour to which the injection plunger travel must respond. Equipment was not available for recording such abrupt pressure fluctuations, and hence discharge pressures are not stated.

As an example of the variations of injection pressure with

R.P.M., and throughout the pumping cycle, the following experience can be cited. During some power runs when using this injection pump, a small relief valve with spring set to hold 8000 lb. per sq.in. static pressure, was placed between the end of the injection line and the nozzle valve. Two orifices 0.022" diameter were in use and the nozzle spring was set for about 900 lb. At about 1000 R.P.M. the relief valve appeared tight. As the R.P.M. was increased leakage appeared and increased until when around 1400 R.P.M., drops of fuel were ejected from the relief valve. This discharge altered, of course, the maximum pressure that would have developed in the nozzle had ejection been from the nozzle orifice only. It is probable, therefore, that at 1600 and 1800 R.P.M. momentary pressures greater than 10,000 lb. per sq.in. occurred behind the orifices when taking the spray patterns. The highest pressures would, too, occur during the time when the paper was being eroded and cut through. Were a pressure-volume or a pressure-time indicator used to record the maximum pressure with these abrupt discharges at high R.P.M., it is probable that, in a measure, the same distortion of diagram would occur as is experienced in taking indicator cards from a high speed engine.

The initial spring load on the nozzle valve P_s, which was adjustable, was determined on a gage testing machine. The values given are those at which the nozzle popped when the plunger of the gage tester was run in rapidly by hand. Both nozzle valves leaked at pressures below the popping pressure, but the latter was taken as

the more comparable with engine conditions. With static pressures, the amount of oil film present on the valve seat influences the magnitude of the pressure at which fuel begins to pass the valve seat.

The fuel pressures in the primary line P_p, were obtained with a gear pump for those pressures of 110 lb. and below. A three-throw plunger pump was used for primary pressures of 200 lb. and above. With the gear pump the pressures were sustained constant. The three-throw plunger pump did not, however, give constant discharge pressure; the pressure in nearly every case exceeded the values recorded. Hence for values of P_p of 200 lb. and above, the recorded pressure may be taken as the minimum that existed during the run. All pressures are gaged at sea level.

The Injection Pump.- The essential parts of the injection pump are shown in the outline drawing, Fig. 1. The cam has symmetrical rise and fall, and is designed for constant acceleration and deceleration. Its outline is shown in Fig. 2. Regulation of the quantity of fuel discharged during each pump cycle, is obtained by changing the length of plunger stroke. This is done by adjusting the plunger position with respect to the cam. Thus, while moving the plunger away from the cam a distance equal to the cam lift, the discharge changes from a maximum quantity to zero. This adjustment is made by means of the threaded sleeve. The hub of this sleeve is graduated both axially and circumferentially, permitting accurate adjustments of pump stroke to within 0.005" and estimated adjust-

ments of 0.001". The rocker arm serves a double purpose. With its roller it serves as a contact element between the cam and the spacer-plunger; and, through the agency of the eccentric, permits some retard and advance of the timing of injection. A spring is used to aid the primary pressure in making the return plunger stroke. Another spring is used to keep the follower roller in contact with the active portion of the cam. Provision was made for two inlet valves and two discharge valves, but, with the nozzle valve spring-loaded, discharge valves are unnecessary and tend to restrict discharge, at least at high R.P.M. of pump. They were not used in obtaining this data. The inlet valves work upside down from usual practice. Their small size will also be noticed, Fig. 3 being four times actual size. The actual pump has an outboard bearing to support the end of the cam shaft and also an oil trough for the cam, neither of which is shown in Fig. 1. A bushing with one hundred splines surrounds the cam shaft, and to it the cam is keyed. This permits giving the cam a fixed advance or retard by increments of 3.6 degrees of cam movement, which in this two-stroke cycle set up was also 3.6 degrees of crank movement. As arranged for the spray pattern work the cam was set so that the follower was at its position of maximum plunger lift when the crank reached top dead center (end of compression stroke).

Nozzles and Tips.- Fig. 4 shows the valve seat and orifice passages for the one-hole and two-hole nozzles, while Figs. 6 and

7 show complete nozzles. The valve was lifted by the pressure on the exposed cross-section of the valve stem. With the single orifice the nozzle body was such that the valve could lift until, if the pressure were great enough, the spring closed. With the two-orifice nozzle the valve lift was restricted in a different nozzle body, to about 0.012". The cross-section of a single 0.026" orifice is 0.000530 sq.in.; the combined cross-section of two 0.022" orifices is 0.0076 sq.in. The combined cross-section of the two 0.022" orifices was, then 43% greater than for the single 0.026" orifice. On the other hand the passages are not quite as direct in the two-hole as in the single-hole nozzle.

Results

The Plots.- Figs. 9 to 26 each give the following data measured either as time in degrees of crank travel or else as the crank location with respect to top dead center:

(a) Time at which cam contacted to produce plunger lift for different lengths of plunger travel. This data was determined not from drawings but at the engine, and hence includes the taking up of slack in all engine and pump parts involved.

(b) The time at which the jet first impacted with the paper. This was nearly always sharply defined due to the lampblack, at the beginning of the pattern, being entirely washed off.

(c) The lag of the beginning of discharge behind time

of cam contacting. This is shown by the value of the ordinate lying between the curves of items (a) and (b). In evaluating the lag of the jet behind start of plunger stroke no correction has been attempted for the time required for the jet to cross the 3/32" gap between orifice and flywheel. This interval is brief, and a correction would call for a knowledge of jet velocities involving rather wide assumptions.

(d) The approximate time in the progress of discharge when heavy discharge ceased and the jet began to thin down. This limit is shown by small crosses. In many cases the end of heavy discharge was well marked by a rounding off of the white portion of the pattern with practically no prior narrowing of pattern or diminution in whiteness. The presence of an arrow on some of the ordinates of the plots, indicates that from that point on there appeared a regular diminution in the intensity of the record.

(e) The apparent cessation of discharge. This is shown by the points designated by inverted triangles. Since the patterns changed from white to light gray that, in turn, became a dull gray as the pattern progressed, the determination of the apparent end of all discharge most frequently required close observation and, unlike the beginning of the pattern, was by no means definite. Hence, too much reliance must not be placed on the finality of those readings. The continuance of the pattern due to dribbling has already been discussed on Page 7.

(f) The approximate interval during which discharge was most intense and somewhat uniform. This was shown on the targets by the cutting away of the paper, through to the metal. On the plots the limits of this cutting action are shown by short dashes situated on the ordinate for the respective lengths of pump stroke. Two conditions tended to make these limits not comparable for different runs: a difference in the thickness and hardness of the shellac behind the paper, and the inability to determine what number of "shots" gave the paper comparable amounts of punishment. The beginning, however, of the cutting through periods are, on the whole, fairly regular.

(g) The compressibility of the fuel and resilience of the injection line is represented, in a manner, by the period of discharge that occurs after the cam reached its peak, which in these runs occurred when the crank was passing top dead center. Were there no leakage past the nozzle valve stem the portion of the plots lying below the dead center line would represent the amount of contraction of the injection apparatus after pumping ceased, plus the amount of the re-expansion of the compressed fluid. Any tendency to develop a pressure wave in the injection line, caused by the plunger impacting upon the fuel, is probably dissipated by the time discharge has continued to the peak position of the cam.

(h) Where the nozzle valve rebounded the pattern was dis-

continuous. Such places are designated by capital R. The plots for the two-orifice nozzle, which had the valve lift restricted to about 0.012", out-number those with the single-orifice nozzle in the ratio of 11 : 7. The symbol R, however, is much more frequent on the plots of the single-hole nozzle which did not restrict the valve lift except by spring load alone.

Effect of Nozzle Spring Pressure.- In Fig. 27 is shown the effect of the nozzle spring pressure P_s, upon the time of the appearance of the jet. A change in spring pressure from 950 lb. up to 3000 lb. per sq.in., delayed the start of the pattern about $3\frac{1}{2}$ degrees of crank travel when the discharge at 1800 R.P.M. was the smallest chosen. This difference grew less as the length of plunger stroke (amount of discharge) was increased.

Effect on Pattern of Nozzle Position.- In Fig. 28 the difference in the patterns recorded when the jet was pointed to meet the on-coming target and when pointed to follow it, are compared for 1800 R.P.M. The nozzle locations with respect to the flywheel target are shown in Fig. 5. The difference in the time of the start of the patterns increased as the plunger stroke was increased. As a contributory influence in that variation in the records it might be mentioned that the line of the face or faces of the nozzle lip is not the line representing the average path of the fuel particles rebounding from the lip. As for the change in time when the pat-

terns were completed, the overlapping of those curves indicates somewhat the difficulty in determining the end of the patterns. From Fig. 28, however, it may be deduced that the arrangement of the nozzle angle with respect to the target did not appreciably alter the injection characteristics shown by this data.

It was determined at the time of taking the data that no readable difference resulted in the record whether the deflector was moved away from the nozzle in a direction towards the back of the lip or moved away in the direction of spray flow. The covering-up movement at end of the interval was by the same path as during removal of the deflector.

Effect of Primary Pressure.- Fig. 29 shows the value of the paper targets for finding one of the most important items of information of this research - the necessary primary pressure for any R.P.M. and discharge quantity. At 1000 R.P.M. a primary pressure of 41 lb. (gage) was sufficient for discharges up to that corresponding to a 0.075" plunger stroke when using two 0.022" orifices. Beyond that length of stroke the 41 lb. pressure did not fill the injection pump to capacity between discharges. Had primary pump operating conditions permitted, the lowest pressure capable of giving the same discharge conditions as the 225 lb. primary pressure, could have been determined.

Effect of Size of Orifice.- Fig. 30 compares the timing and

interval of heavy discharge at 1200 R.P.M. for orifices of different cross-section; one, a single 0.026" orifice; the other, having two 0.022" orifices. The superimposed curves show that discharge began close to the same time for both nozzles, which would indicate that the considerable difference in the primary pressures (80 lb. as against 225 lb.) did not change the quantity of fuel to be discharged from each nozzle. Regarding the interval of heavy discharge, however, this did not differ as might have been expected when there existed the same volume of fuel but 43% difference in orifice cross-section. The manner in which the heavy discharge interval is less for the lesser orifice section when the stroke is short and then is greater than that for the larger orifice section when using the longer strokes, may be due to the difference in the possible lift of nozzle valves. Referring back to the original Figs. 26 and 18, the greatest influence of size of orifice seems to have been the effect on the length of the trailing end. Since this portion of the discharge would occur during the nozzle valve closing, the influence both of valve lift and orifice resistance would enter. Though the two-orifice nozzle had 43% greater cross-section, the discharge coefficient for each hole would be less than for one larger hole of equivalent cross-section. The uncertainty as to the proportion of the total volume of fuel that was discharged by each nozzle in equal time intervals suggests the need of applying means for determining the weights of successive increments of fuel discharged, instead of using spray patterns only.

Effect of R.P.M. upon Lag.- Figs 31 and 32 show the effect of R.P.M. upon the time of the appearance of the jet. The group of curves of Fig. 31 show the jet appearing earlier in about equal increments of crank travel as the R.P.M. was increased by equal amounts. Fig. 32 shows similar rates of change and also how the primary pressure became insufficient as the R.P.M. was increased above 1000. The later appearance of the jet indicates a void in the injection pump not filled during the suction stroke of that pump because of too low primary pressure.

Effect of Compressibility and Resilience.- Fig. 33 is an attempt to compare the effect of R.P.M. upon the amount of resilience set up in the injection equipment and in the fuel itself. The group of plots are for the cessation of heavy discharge as shown in Figs. 13 to 20, inclusive. Unfortunately, the indefinite character of the trailing end of the patterns defeated the purpose of these plots. The plots are remarkable chiefly for showing the long extension of the interval of heavy discharge, after the cam had reached its peak at top dead center, due to the resilience of the injection system and the compressibility of the fluid.

Concerning the influence upon the interval of the injection of fluid compressibility together with stretch of the injection system, the following numerical values deserve attention. The volume of fuel in the injection system after the plunger had finished its stroke, was about 0.28 cubic inch; a little more than one quarter of a cubic inch. From Fig. 34 the plunger displacement correspond-

ing to 0.025" travel of plunger, the shortest used, is 0.00375 cubic inch; that for 0.15" travel is 0.0225 cubic inch. The ratio of the smallest plunger displacement used, 0.00375 cubic inch, to the volume of fuel available to re-expand (after the plunger ceased traveling), is 0.0134 or 1.34%. For the longest travel used the ratio is 0.0803 or 8.03%.

A conservative value for the amount of the combined effects of compressibility and stretch under a pressure of 10,000 lb. per sq.in., would be 3% of the volume of the contained fuel. Hence with a high discharge pressure and high R.P.M. the discharge could readily be put out of time with the supposed timing, as represented by plunger movement, a considerable amount. Not only is there the lag between the time of cam contacting and spray appearance, but there is the long continuance of discharge after plunger action ceases. Figs. 9 to 26 illustrate such results numerically.

Plunger Displacements.- Fig. 34 shows the plunger displacement for different lengths of stroke. For better visualizing the quantities of fuel to be metered by the pump, the amounts of plunger displacement are transposable in terms of the size of an equivalent sphere. The actual discharge could be influenced by two leakages: that past the pump plunger and that past the nozzle valve stem. The injection plunger and the nozzle valve stem were, however, lapped fits and the leakage small. The equality in the time of spray appearance for both nozzles, as shown in Fig. 30, is an indication of the equal ability of the two-nozzle stems to hold liquids

of such low viscosity as gasoline and benzol. Besides the effect of leakage, the actual discharge may differ from the plunger displacement because of too low a primary pressure, especially at the higher R.P.M., as represented by the later appearance of fuel at the longer plunger strokes of Fig. 32. Leakage will vary with the nozzle spring pressure setting P_s, and with the cross-section of orifice used.

Mechanical Closing of Nozzle Valve.- The somewhat irresponsible behavior of the discharge after the end of the plunger travel, makes mechanical control of nozzle valve closing appear attractive. Some preliminary trials of automatic opening and mechanical closing of the nozzle valve were made. These trials, however, did not lend themselves, from the nature of the linkage design, to the taking of spray patterns. Further, at high R.P.M. rapid action is required of such a mechanism. It must, therefore, be light. The exacting, close regulation required of this light mechanism subjected to vibration does not seem to place such a system in the first order of engineering research on high speed equipment. As a research problem, it remains, however, attractive as revealing possibly the limits of dribbling control by means of positive valve action.

Characteristic Extracts from Log

Fig. 11, for 1800 R.P.M. and 0.10" plunger stroke, interval 3 seconds. "Sharp start to pattern. Heavy portion ends rather abruptly, with radial edge, at 14½ degrees after top dead center.

Pattern wet to 27 degrees after dead center but nothing appreciable after 17 degrees past dead center. Paper cut through from 3 degrees before dead center to 10 degrees after. Pattern narrows at 17½ degrees after dead center as though a slight rebound followed." This was one of the best patterns taken.

Fig. 12, 1400 R.P.M.; 0.025" stroke; interval 5 seconds. "Paper roughened up to 10 degrees after dead center. A diminishing pattern from start to 15 degrees after dead center, followed by a thin irregular pattern to 27 degrees after dead center. The thin portion was just noticeable."

Fig. 12, 1400 R.P.M.; 0.150" stroke; interval 3 seconds. "Sharp start to pattern; heavy part ended at about 12 degrees after dead center. Paper washed to 30 degrees after dead center, but only lightly. Appearance of a light rebound at about 15 degrees after dead center. Paper cut through from 21 degrees before to 7 degrees after dead center. Pattern almost negligible beyond end of heavy portion."

Fig. 19, 1400 R.P.M.; 0.025" stroke; interval 5 seconds. "Paper washed to 17 degrees after dead center. Heavy to 11 degrees after dead center, but narrowed and thinned almost from outset."

Fig. 19, 1400 R.P.M.; 0.10" stroke; interval 3 seconds. "Heavy portion to 11 degrees after dead center, but thinning from white into gray, which continued. Paper cut through in spots as far as 5 degrees after dead center."

Conclusions

(1) The start of nearly all patterns was clearly defined, regardless of R.P.M. or pump stroke.

(2) The long continuance of discharge after the cam, and hence the plunger, had reached its highest position, showing the large amount of resilience in the injection system and the compressibility of the fuel. This might be considered as evidence of the existence of high injection pressures.

(3) The interval of injection occurring before the paper was cut through. The regularity of this interval probably reflects the length of time in crank degrees, for maximum valve opening to occur. Line resilience and fuel compressibility would, however, affect the strength of jet by delaying the attainment of maximum pressure. The frequent absence of cutting through of the paper with the shorter plungerstrokes, though the number of shots was sometimes doubled, might be due to three causes: (a) lesser quantity of fuel (smaller stream); (b) plunger travel too short to build up maximum pressures such as occur with longer pump stroke; (c) only the end of the cam rise was in action, during which deceleration, rather than acceleration, of the cam follower was occurring.

(4) The use of the positive control of nozzle valve lift tended to give more regularity to the time of cessation of total discharge than when the valve lift varied with the pressure exerted on the spring by the fuel.

(5) The lag, in crank degrees, of the appearance of the jet behind the time of cam contacting, is practically constant with change in length of plunger stroke for a given R.P.M. This is as it should be for an automatically spring loaded nozzle valve if the cam lift has nearly equal increments per degree of cam rotation.

(6) When the R.P.M. is low the end of all discharge was more nearly at the same time for all lengths of stroke. This may have been due to greater freedom from rebound or tendencies for the nozzle valve to flutter.

Reference

1. Robertson Matthews and A. W. Gardiner : The Time Lag and Interval of Discharge with a Spring Actuated Fuel Injection Pump. N.A.C.A. Technical Note No. 159. 1923.

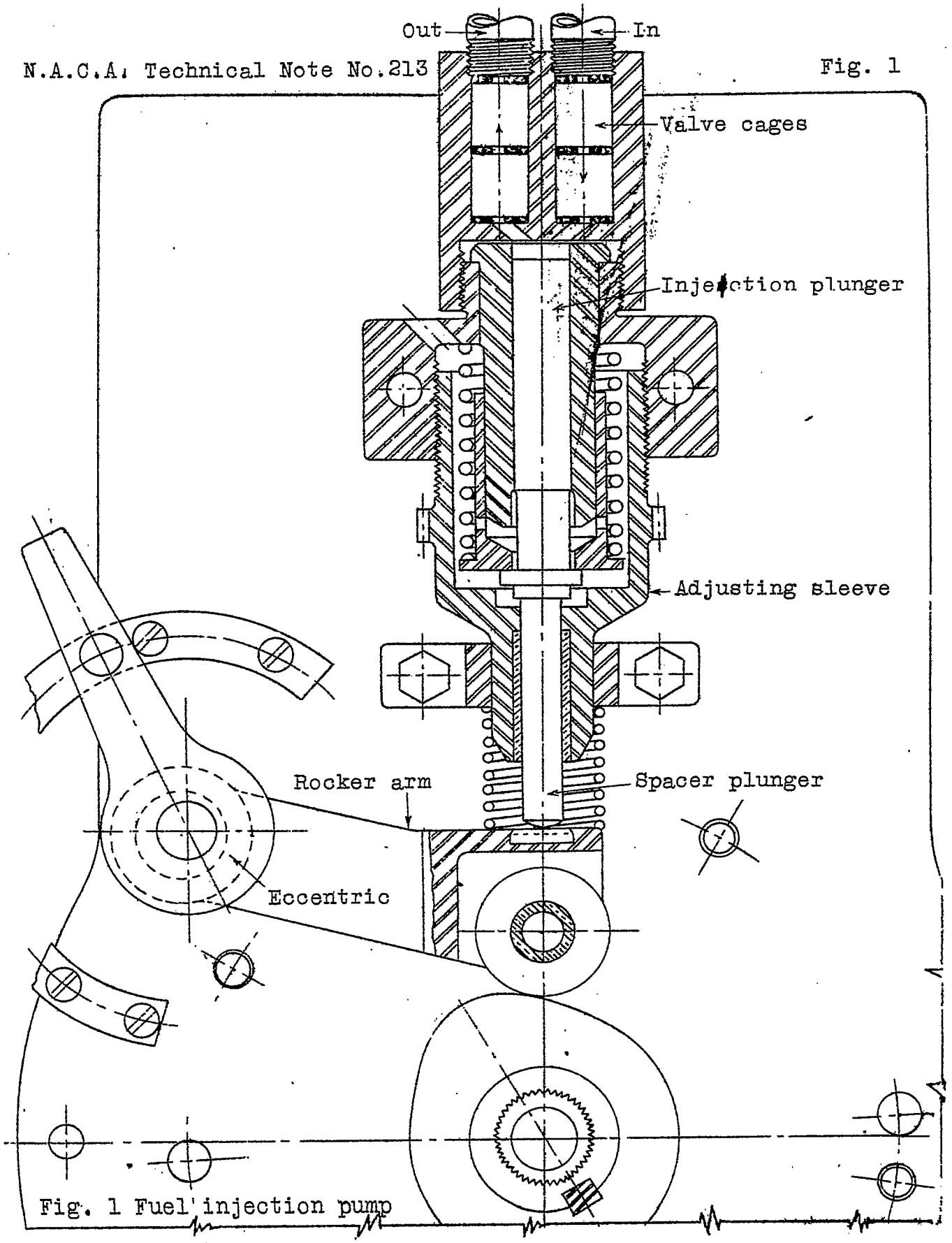

Fig. 1 Fuel injection pump

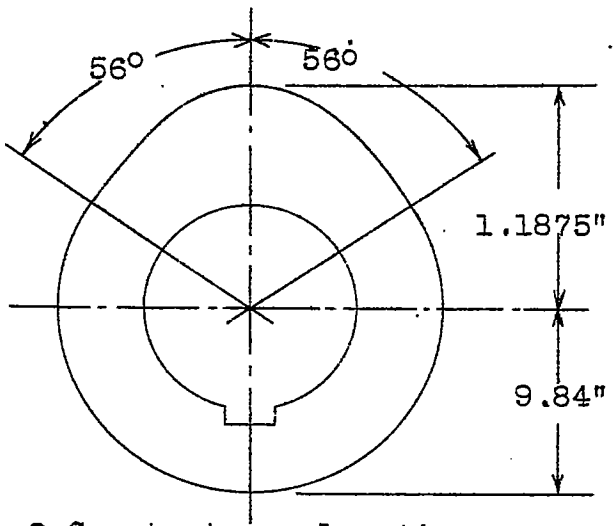

Fig.2 Constant acceleration cam.

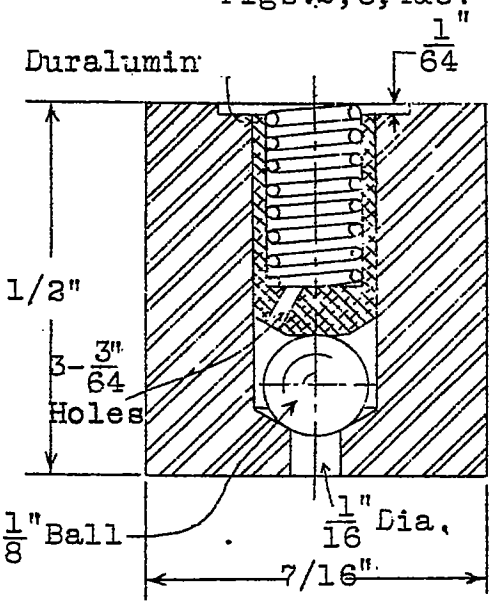

Fig.3 Valve cage assembly.

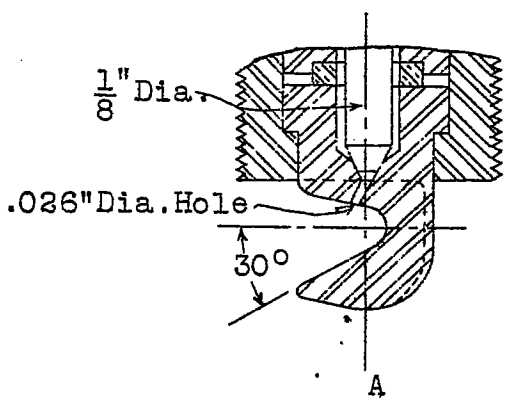

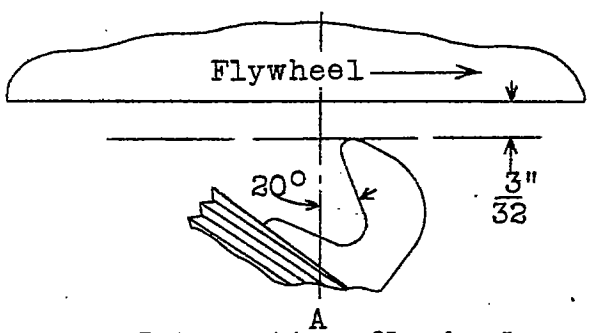

Jet meeting flywheel

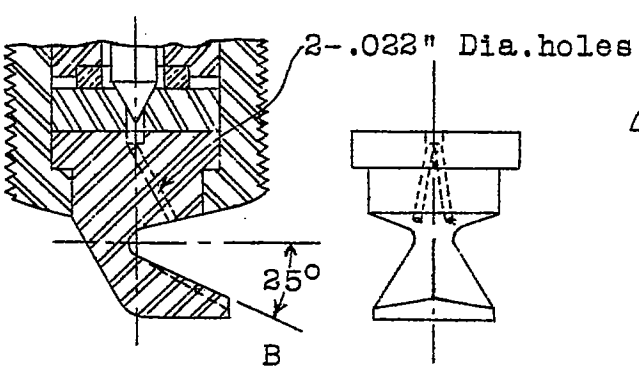

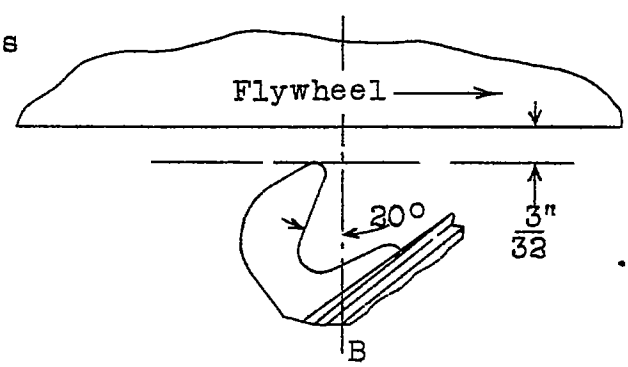

Jet following flywheel

Fig.4 Injection nozzles.

Fig.5 Nozzle locations.

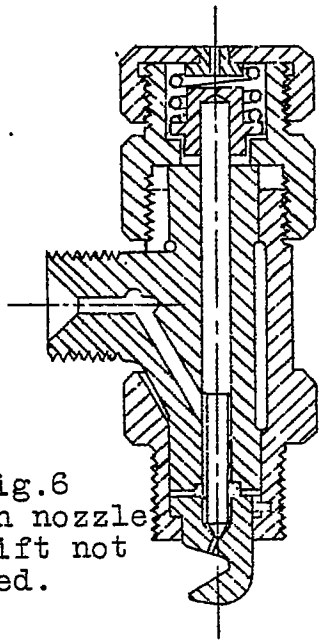

Fig.6
Injection nozzle
Valve lift not
regulated.

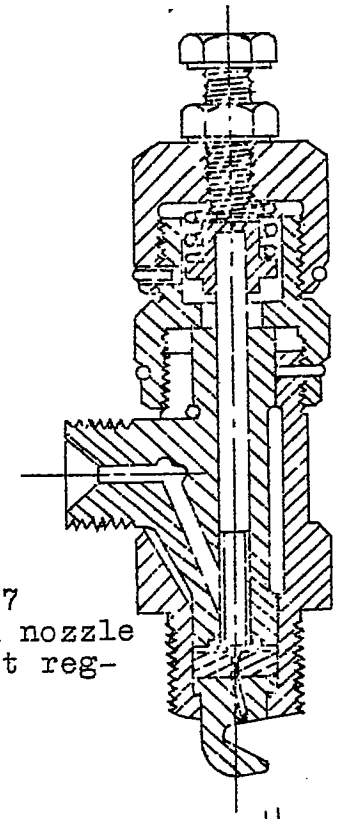

Fig.7
Injection nozzle
Valve lift reg-
ulated.

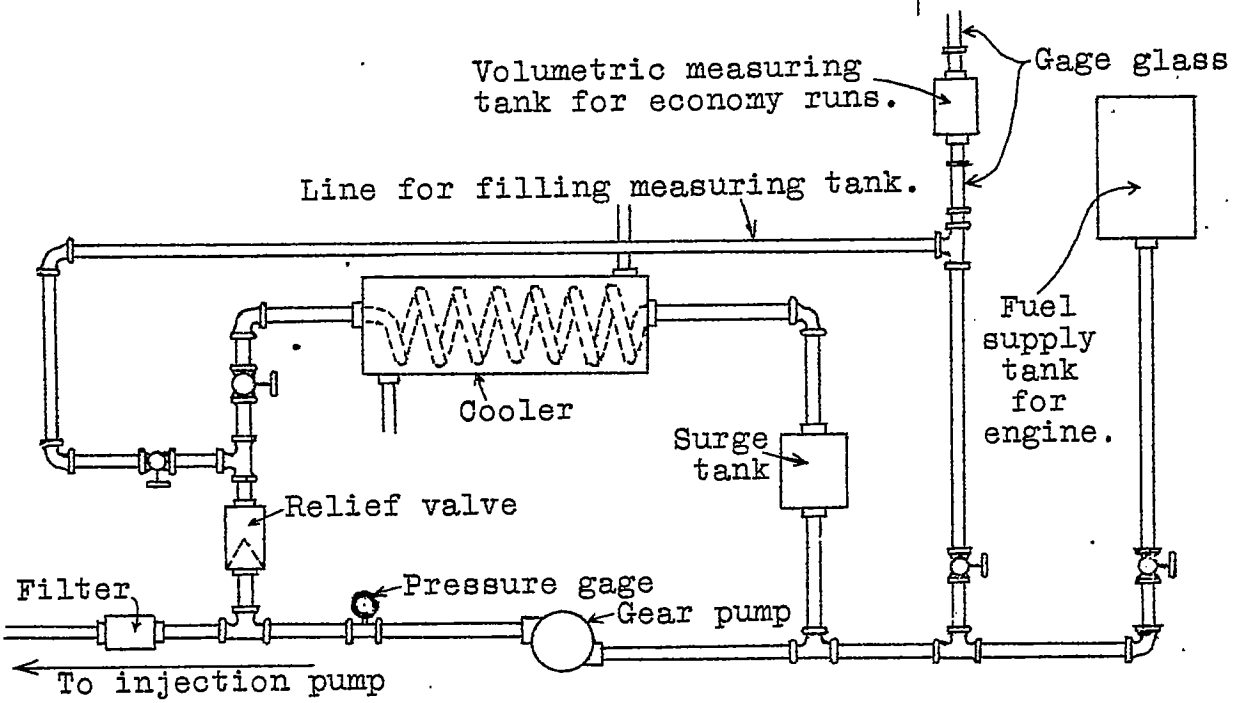

Fig.8 Diagramatic layout of primary system.

Spray following flywheel

Note. All pressures are gauge

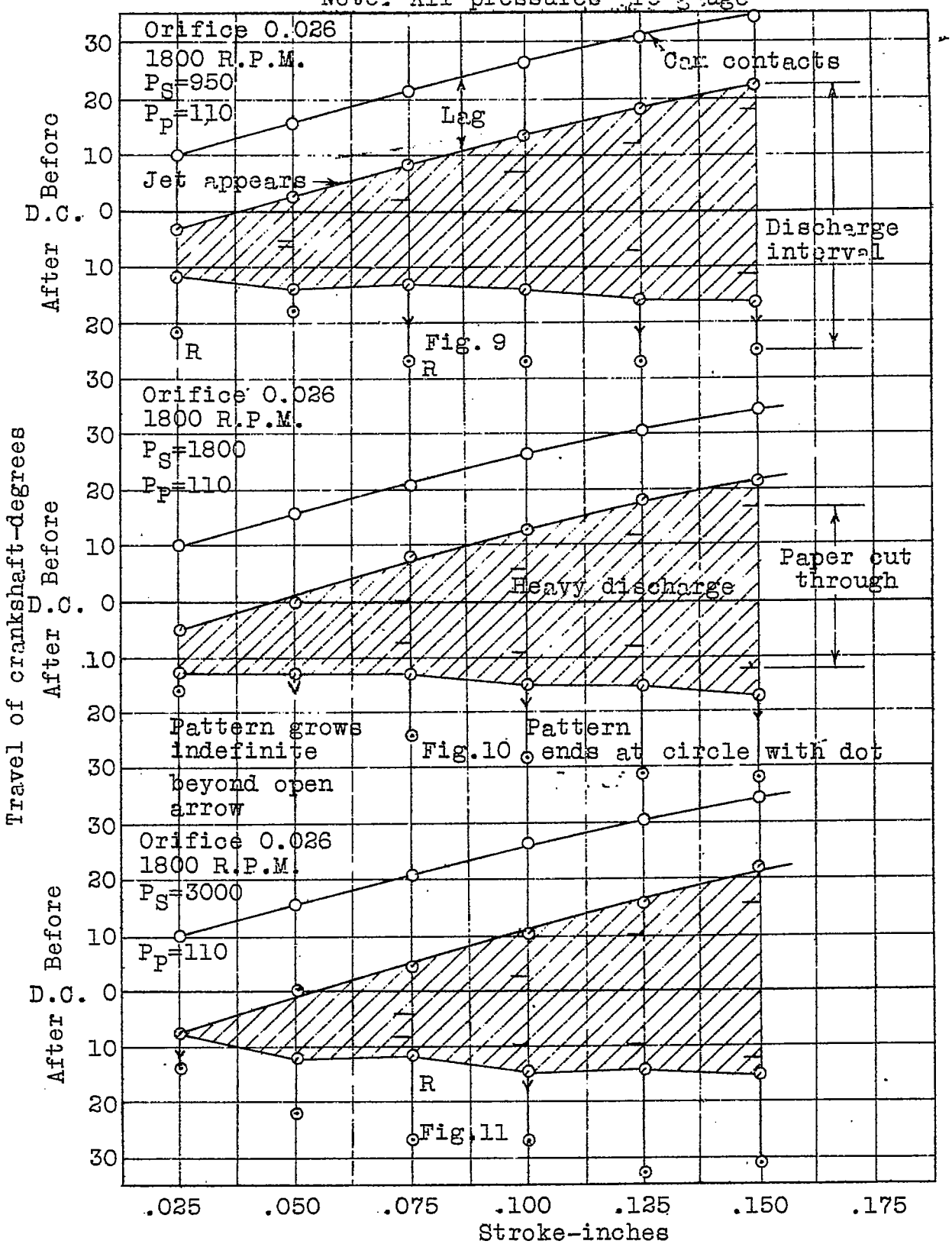

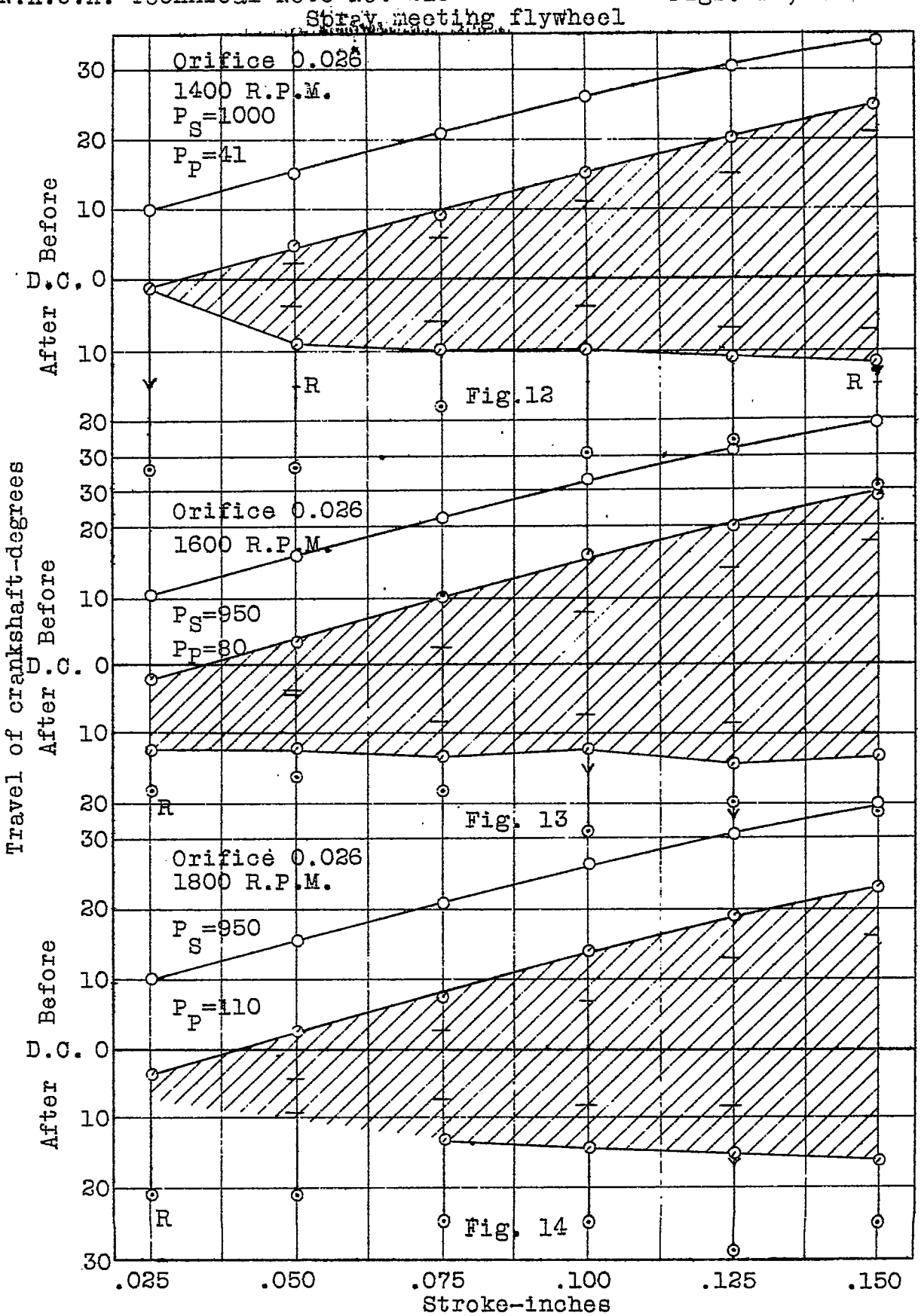
Spray meeting flywheel
Orifice 0.026
1400 R.P.M.
P_S=1000
P_P=41
Fig. 12
Orifice 0.026
1600 R.P.M.
P_S=950
P_P=80
Fig. 13
Orifice 0.026
1800 R.P.M.
P_S=950
P_P=110
Fig. 14
Travel of crankshaft-degrees
After D.C. Before
R
30
20
10
0
.025
.050
.075
.100
.125
.150
Stroke-inches

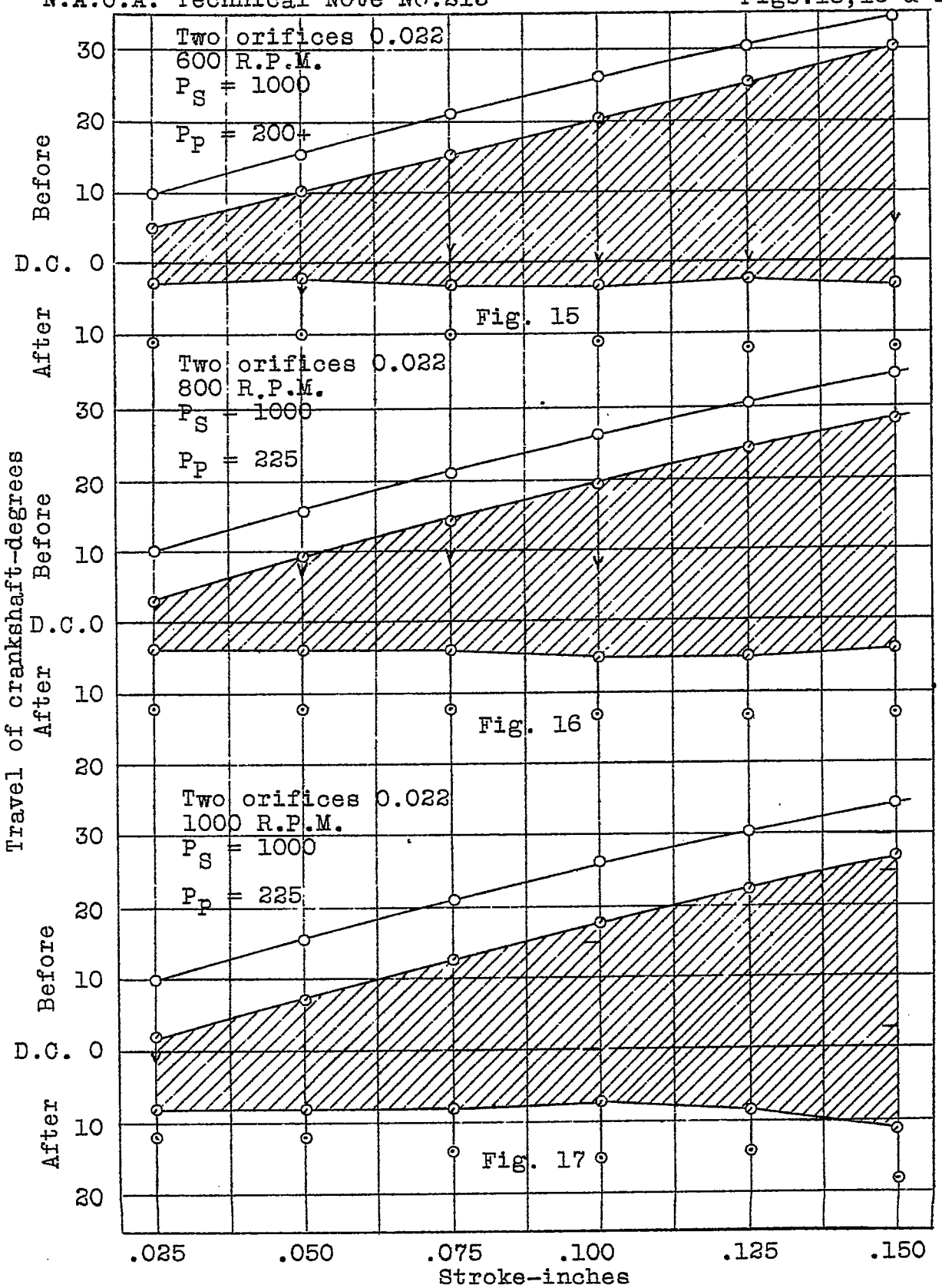
Two orifices 0.022
600 R.P.M.
P_S = 1000
P_P = 200+
Fig. 15
Two orifices 0.022
800 R.P.M.
P_S = 1000
P_P = 225
Fig. 16
Two orifices 0.022
1000 R.P.M.
P_S = 1000
P_P = 225
Fig. 17
Travel of crankshaft-degrees
Before
D.C. 0
After
30
20
10
.025
.050
.075
.100
.125
.150
Stroke-inches

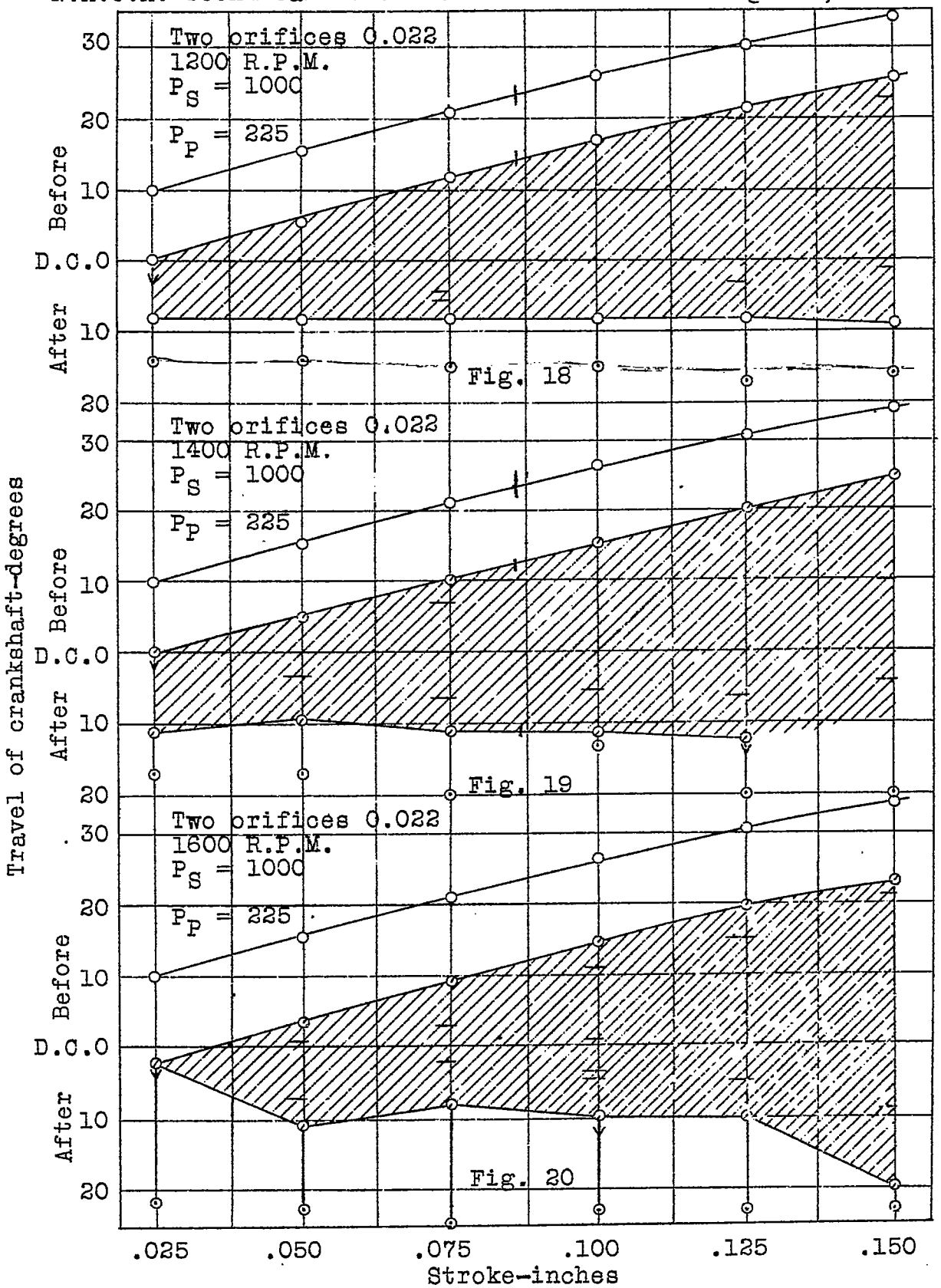
Two orifices 0.022
1200 R.P.M.
P_S = 1000
P_P = 225
Fig. 18
Two orifices 0.022
1400 R.P.M.
P_S = 1000
P_P = 225
Fig. 19
Two orifices 0.022
1600 R.P.M.
P_S = 1000
P_P = 225
Fig. 20
Travel of crankshaft-degrees
Before
D.C.0
After
30
20
10
.025
.050
.075
.100
.125
.150
Stroke-inches

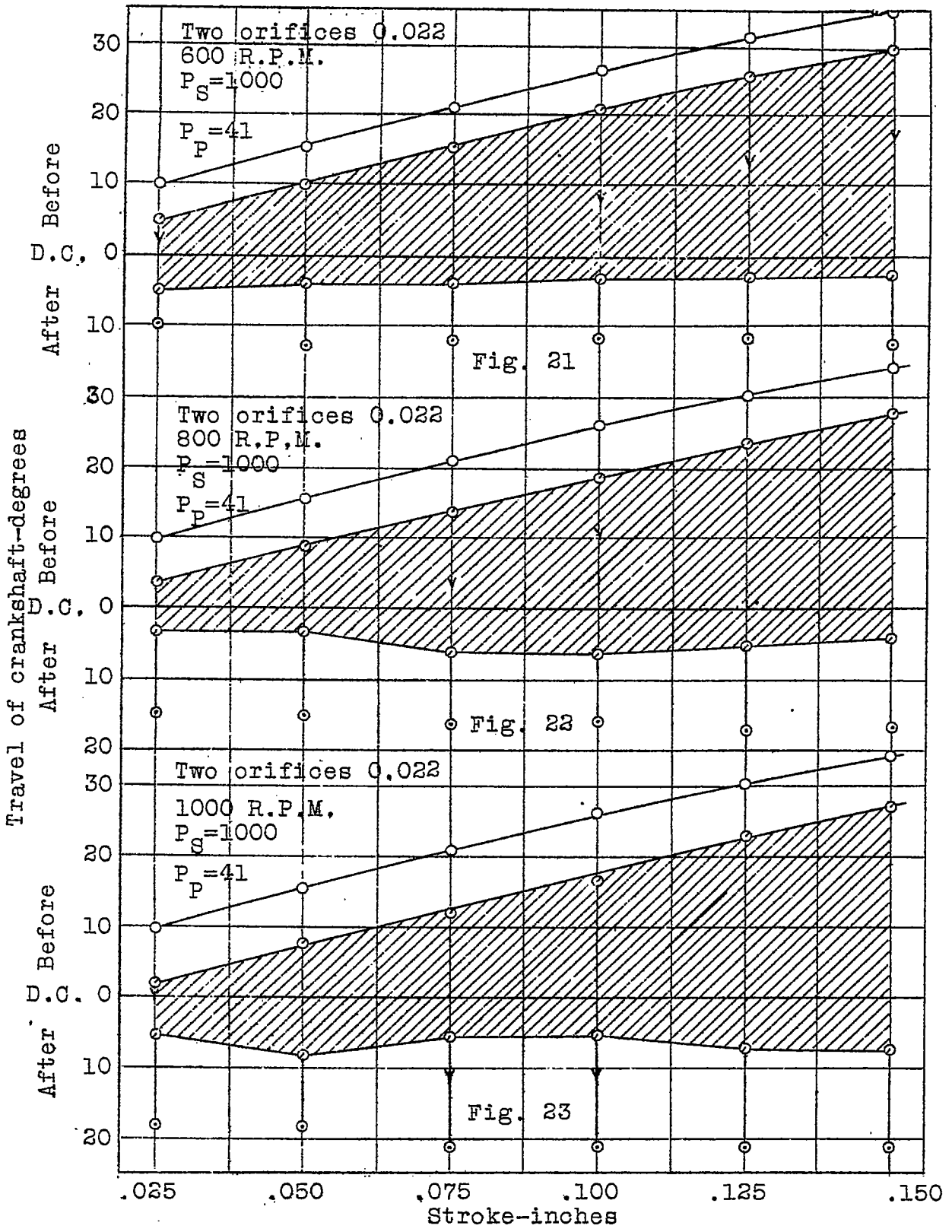
Two orifices 0.022
600 R.P.M.
P_S=1000
P_P=41
Fig. 21
Two orifices 0.022
800 R.P.M.
P_S=1000
P_P=41
Fig. 22
Two orifices 0.022
1000 R.P.M.
P_S=1000
P_P=41
Fig. 23
Travel of crankshaft-degrees
Before
D.C.
After
30
20
10
0
10
20
.025
.050
.075
.100
.125
.150
Stroke-inches

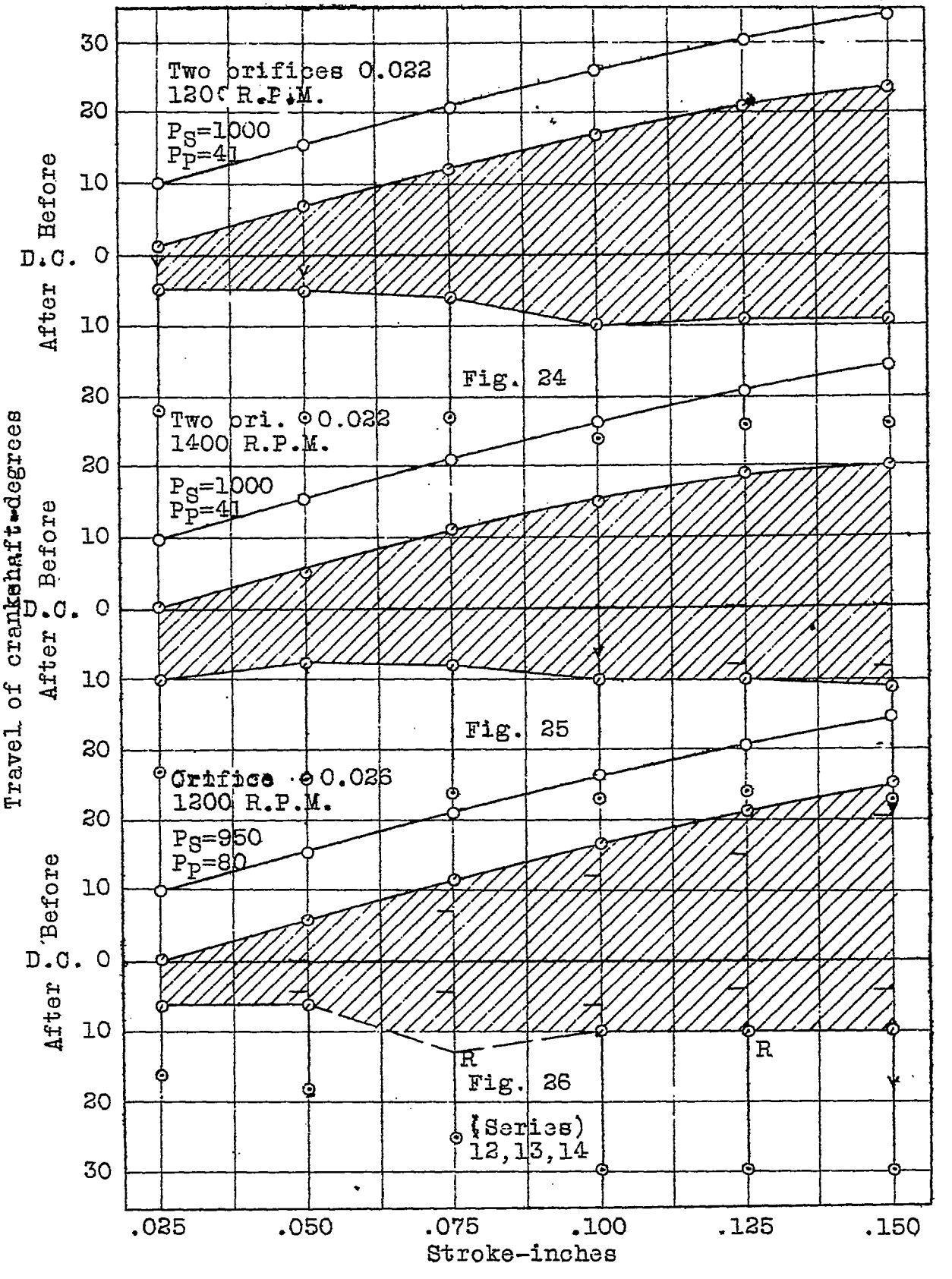
Two orifices 0.022
1200 R.P.M.
P_S=1000
P_P=41
Fig. 24
Two ori. 0.022
1400 R.P.M.
P_S=1000
P_P=41
Fig. 25
Orifice 0.026
1200 R.P.M.
P_S=950
P_P=80
R
R
Fig. 26
(Series)
12,13,14
Travel of crankshaft-degrees
Before
After
D.C.
30
20
10
0
10
20
.025
.050
.075
.100
.125
.150
Stroke-inches

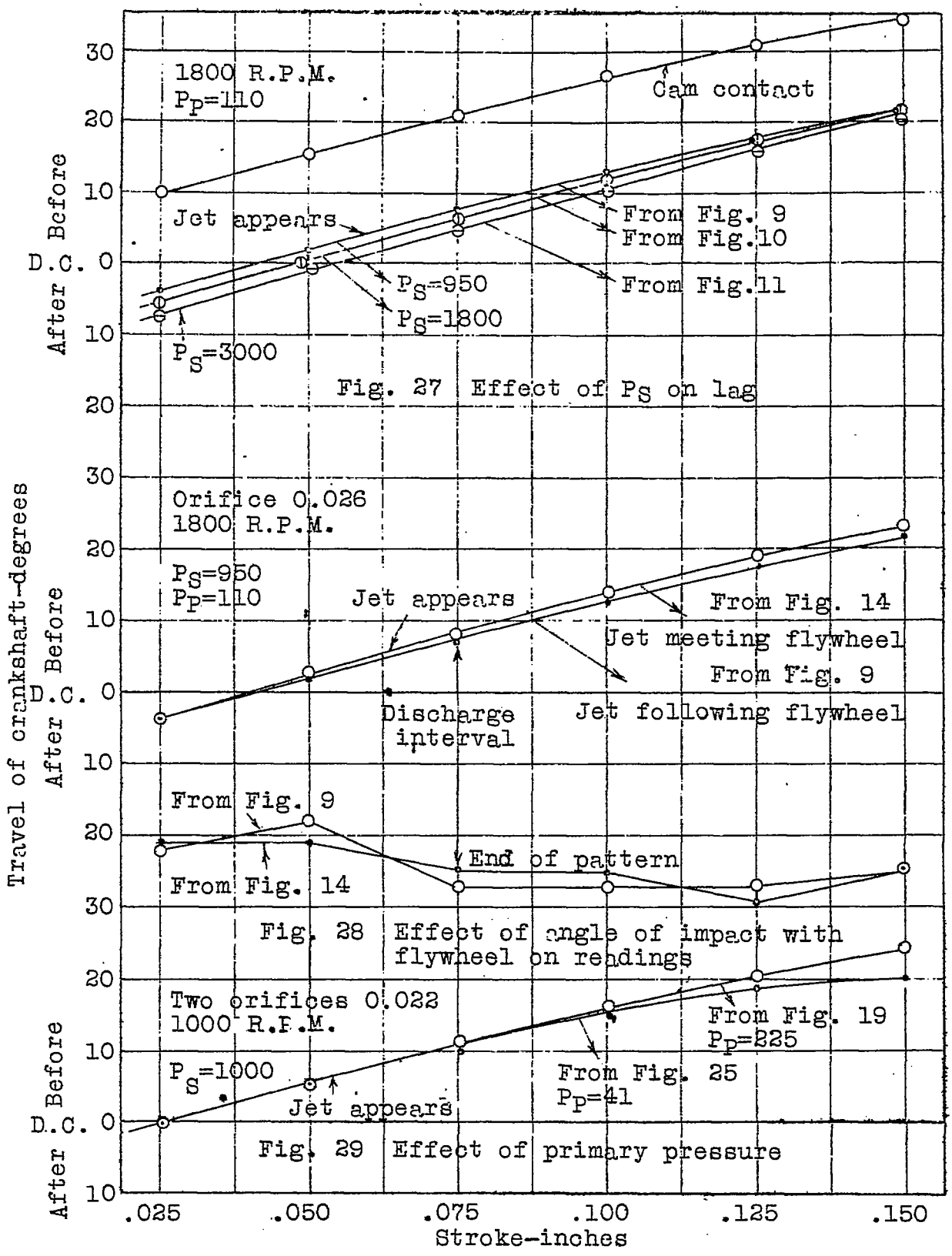

Fig. 27 Effect of P_S on lag

Fig. 28 Effect of angle of impact with flywheel on readings

Fig. 29 Effect of primary pressure

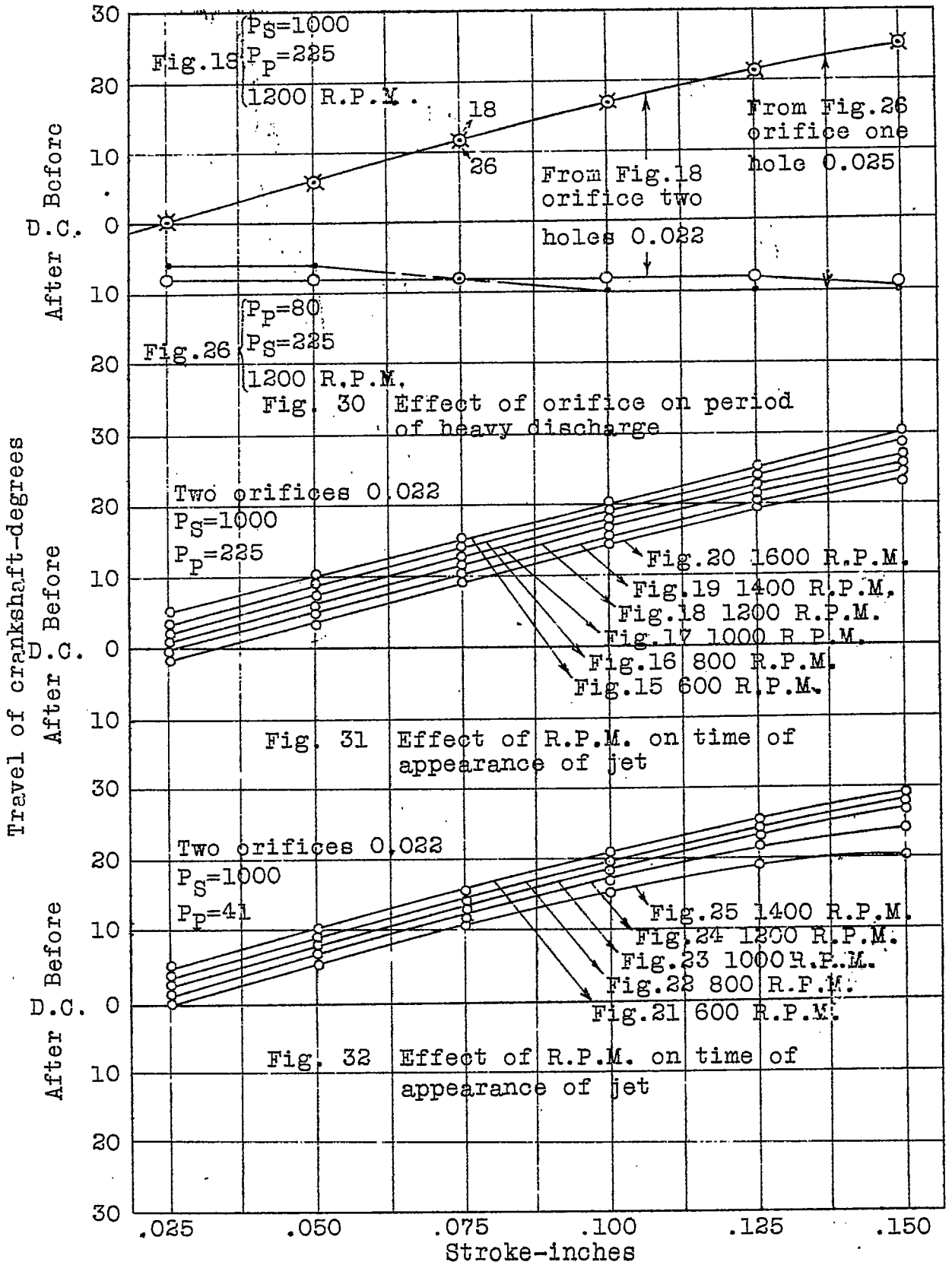
Fig.18 P_S=1000 P_P=225 1200 R.P.M.
18
26
From Fig.26 orifice one hole 0.025
From Fig.18 orifice two holes 0.022
Fig.26 P_P=80 P_S=225 1200 R.P.M.
Fig. 30 Effect of orifice on period of heavy discharge
Two orifices 0.022
P_S=1000
P_P=225
Fig.20 1600 R.P.M.
Fig.19 1400 R.P.M.
Fig.18 1200 R.P.M.
Fig.17 1000 R.P.M.
Fig.16 800 R.P.M.
Fig.15 600 R.P.M.
Fig. 31 Effect of R.P.M. on time of appearance of jet
Two orifices 0.022
P_S=1000
P_P=41
Fig.25 1400 R.P.M.
Fig.24 1200 R.P.M.
Fig.23 1000 R.P.M.
Fig.22 800 R.P.M.
Fig.21 600 R.P.M.
Fig. 32 Effect of R.P.M. on time of appearance of jet
Travel of crankshaft-degrees
After Before D.C.
30
20
10
0
.025
.050
.075
.100
.125
.150
Stroke-inches

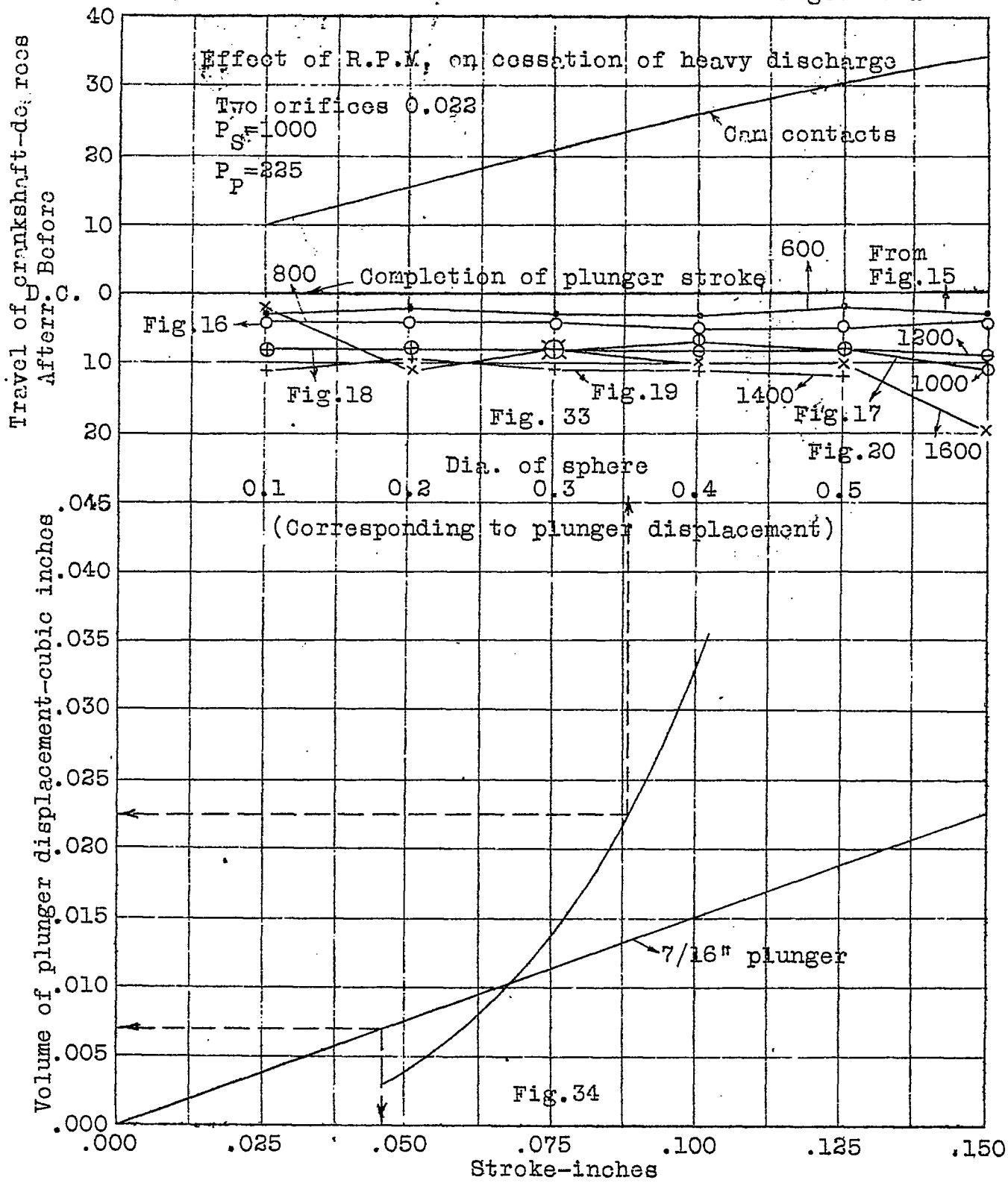
Effect of R.P.M. on cessation of heavy discharge
Two orifices 0.022
P_S=1000
P_P=225
Cam contacts
Travel of crankshaft-degrees
After D.C.
Before
800
Completion of plunger stroke
600
From Fig.15
Fig.16
1200
Fig.18
Fig.19
1400
1000
Fig. 33
Fig.17
Fig.20
1600
Dia. of sphere
0.1
0.2
0.3
0.4
0.5
(Corresponding to plunger displacement)
Volume of plunger displacement-cubic inches
7/16" plunger
Fig.34
Stroke-inches