NATIONAL ADVISORY COMMITTEE
FOR AERONAUTICS

JUL 24 1925
MAILED

TO: Library L.M.A.L.

TECHNICAL NOTES

NATIONAL ADVISORY COMMITTEE FOR AERONAUTICS.

No. 221

MODEL TESTS ON THE ECONOMY AND EFFECTIVENESS OF HELICOPTER PROPELLERS.

By Max M. Munk.

FILE COPY
To be returned to
the files of the Langley
Memorial Aeronautical
Laboratory

July, 1925.

NATIONAL ADVISORY COMMITTEE FOR AERONAUTICS.

TECHNICAL NOTE NO. 221.

MODEL TESTS ON THE ECONOMY AND EFFECTIVENESS OF HELICOPTER PROPELLERS.

By Max M. Munk.

Summary.

At the request of the Bureau of Aeronautics, Navy Department, the following investigation to determine the economy and effectiveness of helicopter propellers was conducted at the Langley Memorial Aeronautical Laboratory. The air forces observed with various propeller models when driven as windmills under different angles of tilting are reported and discussed.

The average velocity of the helicopter blades relative to the air is greater than that of the airplane wings, but this velocity is less variable for different conditions of flight. The former fact implies less economy, the latter greater economy. Hence the helicopter may turn out to be more economical than the airplane wing for extreme velocities of horizontal flight, the airplane then requiring a very great speed range.

Description of the Tests.

The National Advisory Committee for Aeronautics conducted in 1922, a series of model tests which refer to the parachute effect and to the economy of helicopters. Five different propeller

models were exposed to the air current of the 5-foot atmospheric wind tunnel of the Committee under various conditions; they rotated as windmills and their lift, drag, and rate of revolution were measured for different velocities of the air stream. This velocity was measured at a considerable distance upstream from the propeller and gives the average velocity of flow rather than that of the air surrounding the model. With all propellers the angle between the axis of the propeller and the direction of air flow was varied and increased until the propeller ceased to spin. Propeller No. 1 was subjected to different mechanical breaking moments about its axis, in addition to the mentioned variation of the angle of tilting. The other four propellers were allowed to spin freely; the friction of the bearings - ball bearings - is so small that it can be neglected. Propellers Nos. 2 and 3 only differ by the number of blades, four and two respectively. The blades are rectangular wings, not twisted, and of Durand 13 section. The pitch of the blades is adjustable; it was constant during each test, but was varied by steps for different tests. Propellers Nos. 4 and 5 have feathering blades, that is, the blades are allowed to rotate freely about radial axes at right angles to the thrust axis. Their momentary pitch is influenced by the dimensions and position of small tailplanes attached to each blade. The relative angle of attack of these tailplanes was varied for different tests. The blades of propeller No. 4 were provided with ball bearings. Propeller No. 5 is not a pro-

peller in the proper meaning of the word, but resembles a wheel. A circular ring is attached to the hub by means of four spokes, and in each of the four squares between the spokes, a wing is freely rotatable between pairs of steel points.

In Table I some dimensions of the models are compiled. The models are represented in the sketches, Figs. 1 to 5, and their photographs given in Figs. 6 to 9. The results obtained are given in Tables II to V. The measured drag and, when necessary, the lift, too, is corrected by subtraction of the air force originated by the mounting device which holds the rotating propeller and conveys its air force to the balance. The correction is not great; it is given separately in each table. Only propeller No. 5 produces a more considerable parasite drag, for the drag of the entire wheel with the blades removed has to be deducted. For the interpretation of the tests the parasite torque of the rotating spokes has to be taken into consideration too. This torque is small with propellers 1 to 4, but comparatively great and difficult to determine with propeller 5. For these reasons the test with propeller 5 can only be considered as a demonstrating test, which does not give reliable numerical information.

A demonstration of rotating propellers with feathering blades seems indeed instructive. Such propellers show features which cannot easily be anticipated, although it is not difficult to find an explanation for the observed phenomenon after the test; a not unusual occurrence in scientific research work. The blades

of propeller 4 did not rotate as easily as we desired. It was necessary to employ high wind velocities in order to keep the forces of friction small when compared with the air forces, and it is even doubtful whether the desired result was obtained, for the higher wind velocity produces a higher rate of revolution and hence a higher centrifugal force which in turn increases the friction. The rapid rotation made it impossible to observe the individual blades. The propeller could only be observed as a single unit and it showed a disagreeable characteristic. At large angles of pitch it possessed two states of equilibrium, one with a low rate of rotation and one with a high rate. At the point of transition from the former to the latter the propeller began to increase its speed suddenly and on one such occasion it reached too high a speed and broke.

Propeller No. 5 was constructed to find the explanation for this phenomenon. The friction of the blades was kept small enough to allow tests at low speed so that the blades could be easily observed. The first experiments with propeller 5 showed the same characteristic and revealed the reason. The blades were comparatively heavy and possessed a large amount of inertia about their individual axes of rotation. At low speed, where the position of equilibrium of the single blades is very changeable during each revolution of the propeller, the stabilizing moment of the small tailplanes is not great enough to ensure at each moment the proper angle of attack. The period of their os-

cillation is not much smaller than the time for one revolution of the wheel. As a consequence, their angle of attack is usually unfavorable and hence the torque produced about the main axis is only great enough to produce a small number of revolutions. But a high number of revolutions once assumed, the pitch of equilibrium is no longer very variable, the angle of attack is always favorable and hence the torque about the main axis is now great enough to produce high rotational speed.

The natural remedy was the diminution of the moment of inertia of the blades. The results given in Table VI are obtained with light blades of much smaller moment of inertia. With such blades the propeller showed no instability whatsoever but at all velocities and angles of pitch assumed one definite number of revolutions.

Discussion of the Results.

It might seem strange to make windmill tests in order to draw conclusions applicable to mechanically driven propellers. Indeed, we should have preferred to add some tests with driven propellers, but that could not easily be done for want of special apparatus. Nor would such tests greatly enlarge the information to be drawn from these preliminary tests. For in both cases, windmill or propeller, the mechanical laws are the same, and it appears that it is more easy to draw conclusions from the windmill than from the propeller. With respect to the feathering blades the windmill tests include the examination of self-

starting which is necessarily lost with driven propellers. For the investigation of the parachute effect the chosen arrangement is a matter of course.

The parachute effect of a self-rotating propeller with its axis parallel to the wind, is expressed in the best way by the thrust coefficient C_P, that is, the thrust divided by the dynamical pressure $V^2 \rho/2$ of the velocity of motion and by the area of the ring or circle covered by the rotating blades.

The following tables are computed on the basis of the measured velocity which, as mentioned above, was the average velocity of air flow through an unobstructed portion of the tunnel. In Table VI, abstracted from Tables II to V, all thrust coefficients obtained from the tests are collected. At almost all angles of the blades with respect to the disc plane, propeller 2 shows a high parachute effect - as high as $C_P = 1.7$, or about 1.7 times as much as the lift of an ordinary parachute with the same diameter, moving with the same velocity. For the angle 15° of the blades the retarding force is smaller. Here then the angle of attack of the blades is too high and the air surrounding the blades is in a state of flow beyond the burble point.

Propeller 3 shows a maximum parachute coefficient $C_P = 1.6$, scarcely less than propeller 2, in spite of its blade area being only half as great. This seems to indicate that within certain limits the parachute effect depends only on the area swept by the blades but not on the blade area. This is explained by the fact

that blades of smaller area assume a higher rotational velocity. But the work of friction absorbed by them grows with the third power of the revolutions and the thrust with the square only, roughly speaking. There will be a limit then where the power required to spin the propeller with sufficient velocity becomes excessive. The same reason prevents the propeller with too high angles of attack of the blades from producing a large parachute effect. Propeller 1 does not show up well with respect to its parachute effect. Its pitch is too high, the same as in tests 101 and 186. The tests with this propeller when mechanically braked are therefore not very instructive. Braking reduces the number of revolutions and may increase the parachute effect, in particular, if this is originally poor because of excessive blade pitch. In the present case it cannot improve the angle of attack of the blades, but by reducing their velocity the absorbed horsepower may be slightly decreased and in consequence of it the parachute effect slightly improved.

I proceed now to the energy balance of the tilted propeller. This will give information on the economy of the helicopter. It is enough to analyze the results of tests 136 to 141, which is done in Table VIII. The table shows that the ratio L/D of the propeller is considerably smaller than for ordinary wings. The lift observed at this test is about as great as the lift of a biplane model under the same conditions and with a span equal to the diameter of the propeller. L/D, however, shows no maximum,

but increases as the angle of inclination of the propeller decreases, so that it looks as if L/D is to be expected greater for a helicopter under a smaller tilting angle than can be realized by driving the propeller as a windmill.

This is confirmed by a closer analysis of the absorbed energy. This energy can be divided into three parts. One item is the energy absorbed by the drag of the rotating arms connecting the blades and the hub. This item is not great and is given in Table VIII as parasite drag; the value given there is this energy per unit of time divided by the velocity of the air flow. A second item is the induced drag. It has been shown in a former paper (N.A.C.A. Report No. 114, Reference 1) that the induced losses are approximately equal whether the resultant force is acting at right angle to the direction of motion or parallel to it. Hence it is approximately independent of the direction, whatever this may be. The induced drag is therefore $\frac{P^2}{q\ D^2\ \pi}$ where P denotes the magnitude of the resultant air force. This induced drag is also given in Table VIII and the parasite drag and the induced drag are subtracted from the entire net drag. Both are only a small fraction of it, and the ratio L/D is not much improved by the deduction of the drag.

The remaining drag may be denoted D', the work absorbed by it per unit of time is D'V. This work is originated by the drag of the blades, which, however, move with an average velocity U relative to the air, differing from V. The corresponding drag

of these blades is therefore $D'V/U$. The lift of the blades is approximately the same as the lift of the entire propeller. Hence the ratio L/D of the blades is $LU/D'V$. This value is given in Table VIII. It is greater than L/D for ordinary wings. Again, as with L/D of the propeller, it has no maximum, but is always increasing with the increase of the angle of tilting. Experiments with ordinary propellers show $D/L = 1/22$ or so, and indeed the values of D/L of the single blades observed in the present tests permit an extrapolation for the axis of the propeller parallel to the velocity of motion, which shows the same value of D/L (Diagram 11).

However, at the greatest tilting angle tested, D/L is much less favorable; the drag of the blades is surprisingly high. Now the lift of each blade changes periodically during each revolution of the propeller, and it could be thought that this in itself is the reason for a higher drag, although it is not probable. But, indeed, the reason for the high drag is much more simple. The angle of attack changes periodically too, the difference between the greatest and smallest angles of attack can be estimated and it appears that it is so great that the blade cannot occupy a favorable angle of attack during the entire revolution. During a part of it, the angle of attack is too high, and the drag is materially increased, increasing the average drag and impairing the efficiency. The tests show then that serious attention is to be given to the change of the angle of attack of each blade during

each revolution.

The tests do not give rise to any doubt that the absorption of energy in horizontal flight is in accordance with the aerodynamic laws known hitherto. The induced drag is nearly equal to that of an airplane of equal weight, velocity and span. The minimum induced drag possible is the same in both cases, because the same average air forces are distributed the same way. With the airplane the actually induced drag practically agrees with the theoretical minimum and we see no reason nor do the tests indicate that this is materially different with the helicopter. Hence it follows that at high speed the induced drag is only a small portion of the entire drag.

The work absorbed by the drag of the lifting surfaces in the two cases differs on account of different wing areas, relative velocities and angles of attack. (The wing sections used in both cases are not necessarily different.) Besides, the state of flow produced by the wings changes periodically but according to present knowledge this in itself is not necessarily connected with a greater loss. The average velocity of the helicopter blade relative to the air is greater than that of the airplane wing and this involves a greater loss, for, all other things being equal, the drag is a certain fraction of the lift and the work absorbed during equal intervals is proportional to the product of these equal drags and the different velocities. However, the helicopter makes up again for this greater loss by its smaller wing area.

The airplane wing area is not chosen for the ordinary velocity of flight, but for the much smaller velocity used for taking off and landing, and in consequence is much greater than it would need be for ordinary flight alone. If V_1/V_2 denotes the speed range, the area could be made smaller in the ratio of 1 to $(V_1/V_2)^2$ for flight at high velocity only, and the drag of the wings would be decreased in the same ratio. For the ratio D/L (infinite aspect ratio) is much smaller with a high loaded wing, than with a low loaded one on account of the larger value of the lift coefficient. It can almost be said that the drag depends directly on the lift only in so far as the required lift determines the wing area. The drag is approximately proportional to the wing area. Now the wing area of the helicopter can be made comparatively smaller because the average velocity of the blades is almost the same for all conditions of operating. The loss due to the drag of the wing is accordingly smaller.

The angle of attack of the helicopter blade changes periodically and this problem requires serious attention. It is not injurious in itself so long as the average angle of attack remains large enough and so long as the maximum angle of attack remains low enough to ensure a high L/D. The maximum angle of attack has to be small enough to insure an efficient flow around the section. If these conditions are not fulfilled the drag is increased either in consequence of the greater area necessary or in consequence of the greater drag coefficient. Now these two

conditions contradict each other in a certain way, and they cannot be fulfilled at all if the variation of the angle of attack is greater than the range of favorable angles of attack. This latter happened during the tests and it always happens with constant pitch propellers which are tilted and which have no very high rotational velocity. This can be seen by means of diagram 10. There AB represents the tangential velocity of a blade element, CB = BD represents the velocity of flight. ABC is the tilting angle between the propeller disc and the direction of the passing air. AD and AC are then the relative velocities in the utmost right-hand and left-hand positions of the blade element and hence CAD is the variation of the angle of attack. From Diagram 10 it can be seen that this variation is approximately $2\beta\frac{V}{U}$ where β is the tilting angle, V the velocity of flight and U the tangential velocity of the blade element, provided that V/U is a small fraction. The tilting angle of a helicopter is chiefly determined by the ratio of its drag to its lift, which is comparatively smaller than with the airplane because only a part of the energy is absorbed by the drag; the other part is absorbed by the torque of the propeller independent of the horizontal component of its air force. Still the tilting angle will not be much smaller than 8° or so. Let $V/U = 1/3$ by way of example. That gives an approximate variation of the angle of attack, according to the last formula, of $5\text{-}1/3^\circ$. The average angle of attack has to be smaller than the angle of the burble point by half of this, that

is, 2-2/3°. Let the highest lift coefficient with reasonably small drag be 1.1; the average lift coefficient then would be .84, (0.1 subtracted for each degree). But the average velocity is three times as great as with the airplane and hence the loss is the same as that of an ordinary wing working at a lift coefficient one-third as large, i.e., .28. The lift coefficient of the airplane under the same assumptions and with a speed range 2 is 1.1/4 = 0.275. Therefore, under these assumptions, the losses are about equal. It appears, however, that the helicopter becomes more favorable if a greater speed range of the airplane is required, that is, at higher velocity, provided that the tip velocity of the helicopter does not become too great.

Another way of avoiding too great a variation of the angle of attack is by the use of feathering blades. Care must be taken that the period of oscillation of the single blades swinging about their hinges under the air force is small when compared with the duration of one revolution of the propeller. Otherwise expressed, the directing moment of the attached tailplane (or produced otherwise), has to be large enough to turn the blade quickly and in proper time into the right position, causing at all times the right angle of attack. The directing moment required is smaller, the smaller the moment of inertia of the blades about the hinge axis. This can be made comparatively small at full size. It may also be possible to govern the feathering so that the lift rather than the angle of attack is maintained constant, thus decreasing

the stresses in the blades. But this subject lies beyond the limits of this report.

A third possibility of avoiding too great a variation of the angle of attack is the arrangement of a separate propeller with horizontal axis. Then the helicopter is not tilted at all and diagram 10 shows that then the angle of attack becomes constant. We consider this solution as poor. Additional weight and complication are its characteristics. However, it may be practical in connection with methods of controlling and stabilizing the helicopter, things not discussed in this report.

The tests show a greater parachute effect than expected. It is probable that a systematic series of tests will lead to a still greater parachute effect. The helicopter is to be used as parachute in cases of emergency only and it seems then that this can be done with sufficient effectiveness, moving down nearly at right angles to the propeller disc. With respect to the possibility of gliding down on an inclined path the helicopter is indeed inferior to the airplane; the minimum gliding angle is much larger in general.

With respect to the feathering blades the test has demonstrated that these can be constructed to work well. The application of the feathering blades decreases the number of the controlling movements required of the pilot and hence would simplify the solution of the stability problem and the operation of the helicopter.

Conclusions.

1. Helicopter propellers, when allowed to spin freely, may have a parachute effect 1.5 times as great as that of a parachute having the same diameter.

2. The gliding angle of a helicopter is poor.

3. The economy of helicopter propellers can be superior to that of airplane wings, in particular, for high horizontal speed. For the airplane area has to be designed for the landing speed and is too great for high speed, but the helicopter blade has always the same average speed. On account of its comparatively smaller blade area, it saves so much horsepower that this makes up for the additional horsepower due to the relative velocity of the blades being greater than the velocity of flight. Besides, the propeller loss is avoided.

4. Feathering blades can be made to work well.

5. Maintenance of stability and controllability and the mechanical equipment may require additional horsepower; these are not taken into account in the previous statements.

Table I.
Dimensions of the Propellers.

No.	Number of blades	Maximum diameter	Inside diameter of blades	Mean blade breadth	
1	4	60 cm	--	5.4 m	Rigid
2	4	60 "	30	7.7 "	Adjustable
3	2	60 "	30	7.7 "	"
4	2	60 "	20	3.5 "	Feathering
5	4	80 "	36	7.7 "	"

Table II.

Propeller 1. Dynamic pressure q = 14.1 kg/m²

Test No.	Angle of tilt	Revolutions per minute	Braking moment kg-cm	Lift kg	Drag kg
1	0°	1920	13.4	.11	3.08
2		--	12.2	.15	3.20
3		2220	9.79	.091	3.08
4		--	7.32	.074	2.98
5		2740	4.89	.049	2.80
6		2740	2.44	.039	2.50
7		2960	1.22	.031	2.35
8		3020	.61	.098	2.38
9		3020	0	.130	2.37
10	10°	1800	12.22	.64	3.09
11		2180	9.79	.64	3.16
12		2380	7.32	.59	2.91
13		2620	4.89	.56	2.70
14		2850	2.44	.46	2.45
15		3000	1.22	.44	2.39
16		3030	0.61	.43	2.38
17		3030	0	.40	2.21
18	30°	1800	8.55	1.51	2.23
19		1972	2.32	1.18	2.15
20		2232	4.89	1.05	1.19
21		2357	2.44	.89	1.75
22		2614	1.22	.84	1.65
23		2614	0.61	.81	1.57
24		2639	0	.79	1.55
25	50°	1332	3.66	1.02	.93
26		1644	2.44	.91	.91
27		1888	1.22	.82	.86
28		1918	.61	.84	.82
29		1473	0	.78	.68
30	70°	198	1.22	.48	.176
31		349	.86	.39	.155
32		575	.35	.34	.145
33		759	0	.26	.145

Table II (Cont.)

Test No.	Angle of tilt	Revolutions per minute	Braking moment kg-cm	Lift kg	Drag kg
34	15°	--	11.8	.90	2.88
35			9.78	.90	2.77
36			7.58	.83	2.86
37			4.90	.75	2.68
38			3.67	.68	2.47
39			2.44	.76	2.43
40			1.22	.69	2.37
41			6.10	.67	2.27
42			0	.95	2.37
43			12.8	.41	3.16
44			9.78	.39	3.23
45			7.33	.37	3.08
46			4.90	.35	2.89
47			3.67	.33	2.66
48			2.44	.32	2.59
49			1.22	.26	2.49
50			0.10	.25	2.39
51			0	.22	2.29

Correction.

Angle of tilt	Lift kg	Drag kg	q kg/m²
80°	-.030	.182	14.1
70	-.043	.14	
50	-.047	.139	
30	-.031	.07	
10	-.010	.086	
0	+.001	.101	

Table III.

Propeller 2. Revolutions 3000/min.

Angle of tilt	Test No.	Angle of blades	Dynamic pressure kg/m²	Lift kg	Drag kg
0	101	15°	20.1	0	3.72
20	102		23.3	1.12	3.66
40	103		34.1	2.15	3.21
50	104		48.3	2.59	2.90
60	105		82.8	2.82	2.73
0	106	10°	17.2	0	4.76
20	107		20.2	1.59	4.73
40	108		26.2	2.98	4.01
50	109		34.8	3.68	3.56
60	110		49.7	3.69	2.84
70	111		11.5	4.56	2.66
0	112	5°	20.9	0	7.00
20	113		24.8	2.59	7.48
40	114		34.0	5.09	6.53
50	115		37.2	5.79	5.17
60	116		41.9	5.99	3.76
70	117		73.5	6.23	2.90
0	118	4°	23.1	0	7.76
20	119		24.6	2.56	7.30
40	120		32.2	4.92	6.24
50	121		36.5	5.76	5.16
60	122		44.3	6.25	3.95
70	123		70.6	6.67	3.01
0	124	3°	26.2	0.02	9.09
20	125		28.7	2.99	8.61
40	126		32.7	5.17	6.54
50	127		37.3	6.14	5.45
60	128		46.7	6.92	4.42
70	129		68.7	6.90	3.17
0	130	2°	29.5	0.02	10.51
20	131		32.4	3.50	10.03
40	132		35.2	5.74	7.25
50	133		47.2	6.83	5.91
60	134		49.1	7.52	4.68
70	135		79.1	7.58	3.42

Table III (Cont.)

Propeller 2 Revolutions 3000/min.

Angle of tilt	Test No.	Angle of blades	Dynamic pressure kg/m²	Lift kg	Drag kg
0	136	1°	33.5	.04	11.83
20	137		34.8	3.82	10.91
40	138		38.8	6.58	8.16
50	139		42.4	7.36	6.48
60	140		62.7	8.78	5.31
70	141		78.4	9.58	4.29
0	142	0°	32.3	.02	11.62
20	143		36.2	3.95	11.29
40	144		40.5	6.77	8.54
50	145		44.5	7.87	6.90
60	146		57.3	9.32	5.83
70	147		82.9	9.67	4.24
0	148	-1°	39.5	0	14.05
20	149		38.8	4.32	12.37
40	150		44.8	7.74	9.53
50	151		51.5	9.67	7.36
60	152		58.1	9.47	6.01
70	153		94.0	10.67	4.85

Drag Correction for q = 14.1 kg/m²	
Angle of Tilt	Drag kg
0	.109
20	.139
40	.168
50	.179
60	.179
70	.179
Drag Correction for q = 56.5 kg/m²	
0	.447
20	.569
40	.707
50	.749
60	.749
70	.747

Table IV.

Propeller 3. Revolutions 3000/min.

Angle of tilt	Test No.	Angle of blades	Dynamic pressure kg/m²	Lift kg	Drag kg
0	154	5°	12.5	0	3.57
20	155		12.9	1.13	3.30
40	156		17.0	2.21	2.83
50	157		20.5	2.27	2.33
60	158		29.5	3.87	1.88
0	159	4°	12.9	0	3.92
20	160		13.3	1.23	3.61
40	161		17.2	2.44	3.18
50	162		20.9	2.91	2.62
60	163		27.6	3.03	1.97
0	164	3°	13.8	0	4.26
20	165		14.7	1.39	4.05
40	166		17.3	2.44	3.16
50	167		21.4	3.17	2.79
60	168		31.2	3.42	2.05
0	169	2°	13.8	0	4.59
20	170		15.8	1.50	4.36
40	171		18.0	1.71	3.39
50	172		22.3	3.41	3.00
60	173		31.4	3.81	2.40

Drag Correction for q = 14.1 kg/m²
.069
.119
.159
.179
.169

Drag Correction for q = 56.5 kg/m²
.329
.479
.649
.729
.749

Table IV (Cont.)

Propeller 3. Revolutions 3000/min.

Angle of tilt	Test No.	Angle of blades	Dynamic pressure kg/m²	Lift kg	Drag kg
0	174	1°	16.1	.04	5.15
20	175		17.2	1.68	4.83
40	176		21.7	3.27	4.25
50	177		23.5	3.84	3.36
0	178	0°	18.7	0	5.83
20	179		19.1	1.87	5.47
40	180		23.2	3.57	4.52
0	181	10°	10.7	0	2.17
20	182		11.8	.75	2.24
40	183		17.2	1.45	1.94
50	184		23.2	1.75	1.68
60	185		48.2	1.95	1.25
0	186	15°	16.4	.04	1.92
20	187		17.5	.54	1.76
40	188		26.4	1.00	1.57
50	189		41.2	1.23	1.41
60	190		63.2	1.75	1.15

Table V.
Dynamic Pressure.

Propeller 4 $q = 14.1\ kg/m^2$

Angle of tilt	Test No.	Revolutions per minute	Lift kg	Drag kg
0	191	1920	.01	1.85
10	192	2610	.49	2.99
20	193	2610	.92	2.71
30	194	2360	1.21	2.09
45	195	1710	1.01	1.07
60	196	576	.30	.24
0	197	2880	0	3.47
10	198	3030	.58	3.51
20	199	2880	1.06	3.15
30	200	2790	1.41	2.65
45	201	2500	1.56	1.81
60	202	1646	.87	.69
0	203	1630	.01	1.52
10	204	1600	.24	1.46
20	205	1550	.43	1.28
30	206	1410	.54	1.04
45	207	1150	.58	.65
0	209	3040	.09	3.25
10	210	2880	.49	3.28
20	211	2820	.99	2.93
30	212	2720	1.34	2.53
45	213	2400	1.43	1.66
60	214	870	.36	.25

Table V (Cont.)
Dynamic Pressure.

Propeller 4. $q = 14.1$ kg/m²

Angle of tilt	Test No.	Revolutions per minute	Lift kg	Drag kg
0	215	3060	0	3.41
10	216	3030	.55	3.33
20	217	2970	1.04	3.08
30	218	2740	1.36	2.55
45	219	2500	1.38	1.61
60	220	900	.41	.27
0	221	3390	0	4.89
10	222	3510	.72	4.73
20	223	3230	1.37	4.05
30	224	3200	1.80	3.59
45	225	2880	2.24	2.62
60	226	1920	1.21	1.02

Table VI.
Propeller No. 5.

Test No.	Angle of tilt	Dynamic pressure kg/m²	Revolutions per minute	Angle of tailplane	Lift kg	Drag kg
227	0	2.6	360	0°	-.03	.89
228	45	6.15	320		.62	1.17
229	60	16.8	69		.82	1.45
230	0	2.6	576	1°	-.04	2.14
231	45	6.15	600		1.46	2.28
232	60	16.8	626		3.09	3.35
233	0	2.6	-	Blades removed	.03	.54
234	45	6.15	-		.18	.86
235	60	16.8	-		.60	1.65

Table VII.
Parachute Effect.

Test No.	Propeller No.	Angle of blade	C_P
101	2	15°	.87
106		10	1.30
112		50	1.58
118		40	1.58
124		30	1.58
130		2	1.70
136		1	1.66
142		0	1.69
148		-1	1.68
154	3	5	1.36
159		4	1.43
164		3	1.45
169		2	1.57
174		1	1.51
178		0	1.47
181		10	.96
186		15	.55
191	4	-5	.52
197		0	.98
203		-10	.43
209		-20	.92
215		+ 2	.96
221		- 5	1.38
227	5	0	.57
239	5	1	2.53
9	1	-	.60
		Braking moment	
1	1	13.4	.77
2		12.2	.88
3		9.79	.77
4		7.32	.74
5		4.89	.70
6		2.44	.62
7		1.22	.60
8		.61	.60
9		0	.60

Table VIII.

Test No.	Propeller No.	Angle of tilt	D net kg	D Induced kg	D parasite kg	D remaining kg	L kg	$\frac{D \pi n}{V}$	$\frac{D}{L}$	$\frac{D}{L} \frac{V}{U}$
136	2	0	11.83	1.84	.436	9.6	.045	3.38	∞	∞
137		20	10.91	1.77	.423	8.7	3.82	3.33	2.24	.67
138		40	8.16	1.44	.400	6.2	6.75	3.15	.92	.29
139		50	6.48	1.25	.385	4.8	7.36	3.00	.65	2.18
140		60	5.31	1.37	.315	3.7	8.77	2.47	.424	1.71
141		70	4.79	1.59	.280	2.4	9.58	2.21	.243	1.13

References.

1. Max M. Munk: Some New Aerodynamical Relations.
N.A.C.A. Technical Report No. 114. 1921.

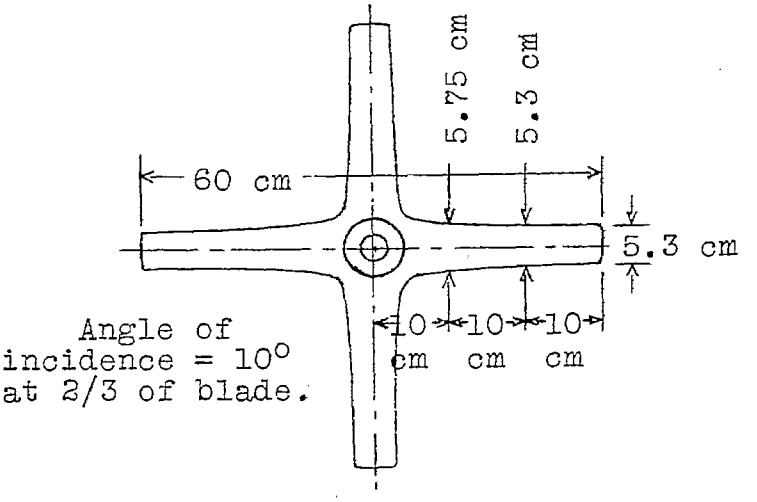

Fig.1.

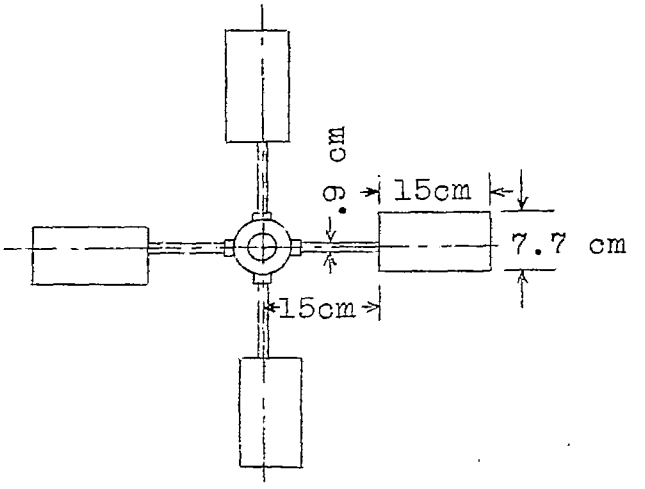

Fig.2.

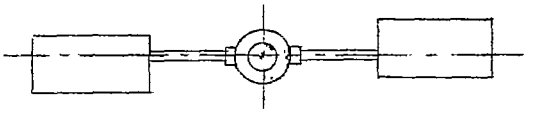

Fig.3.

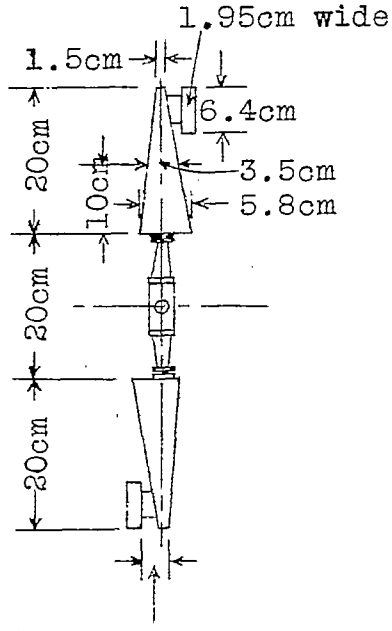

Leading edge to leading edge of tail = 3.6cm

Fig.4.

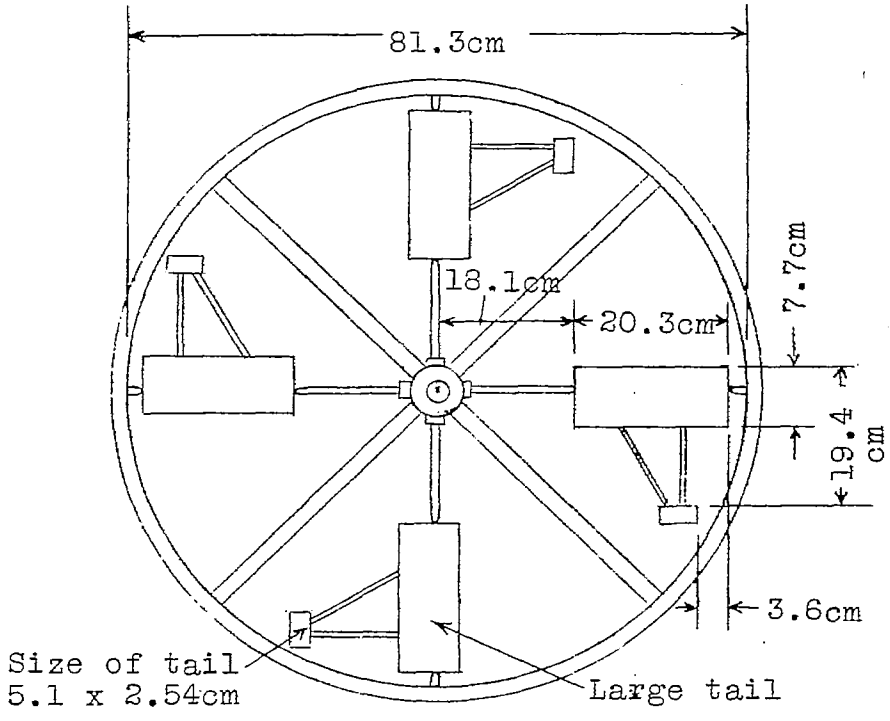

Fig.5.

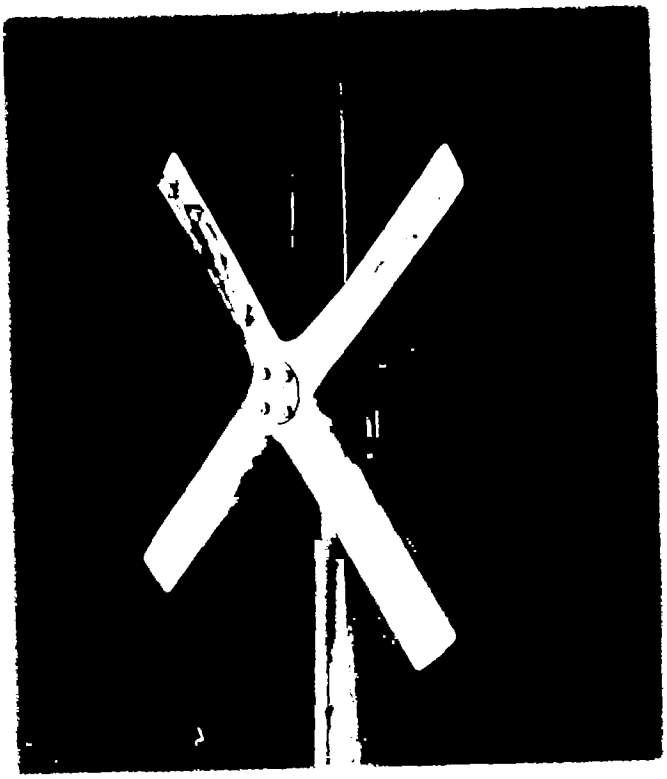

Fig.6

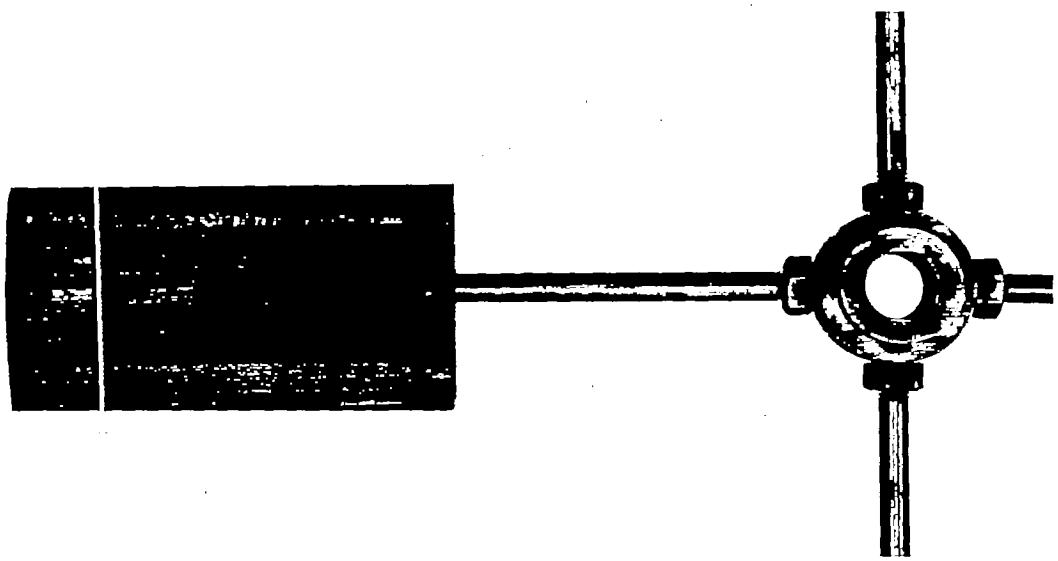

Fig.7

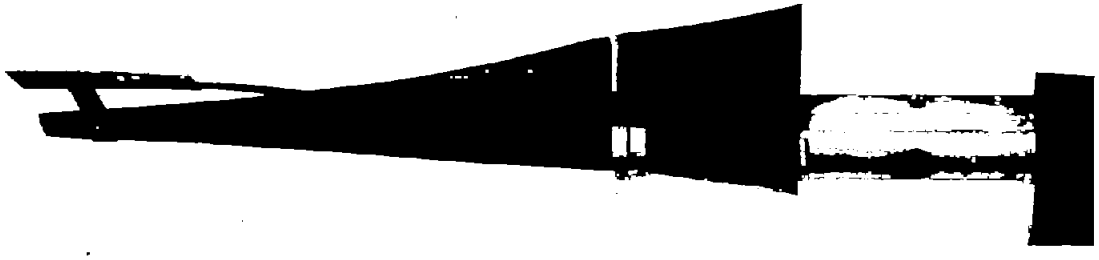

Fig.8

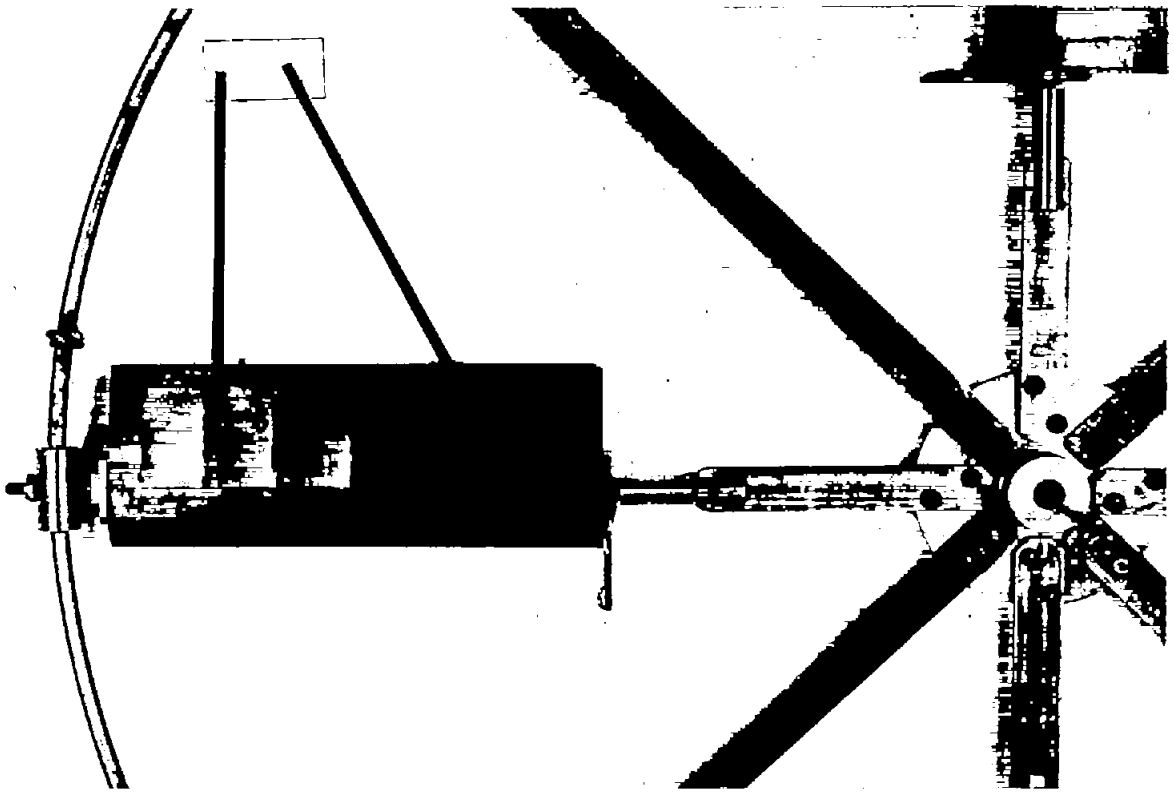

Fig.9

2607 A.S.

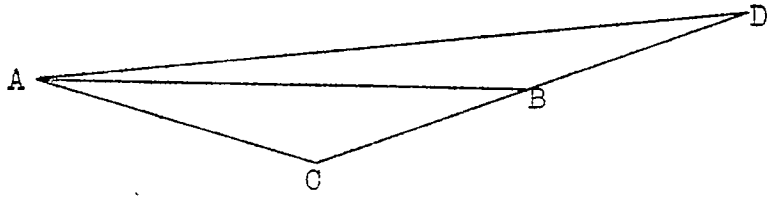
A
B
C
D

Fig.10

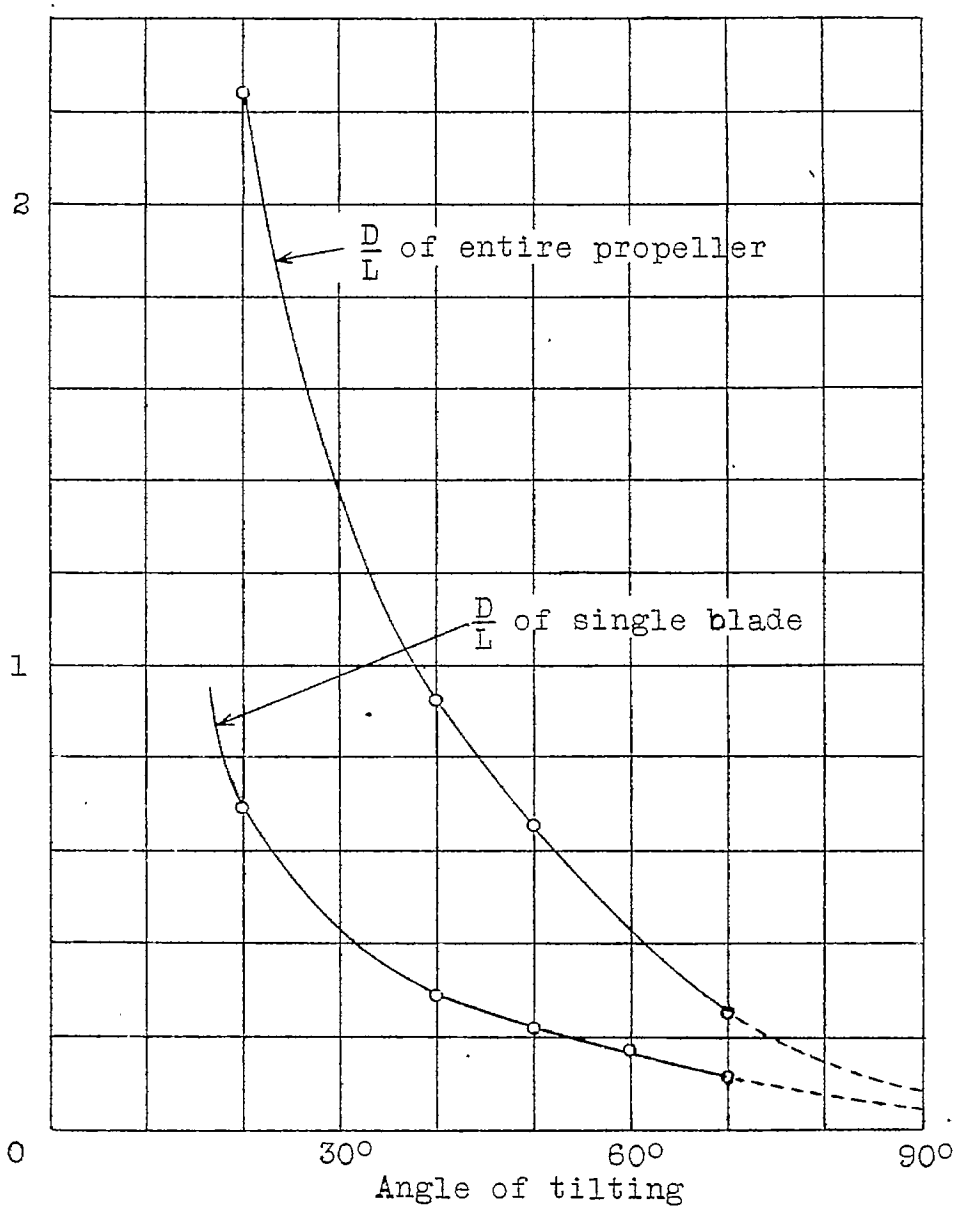
2
1
0
30°
60°
90°
Angle of tilting
D/L of entire propeller
D/L of single blade

Fig.11