NATIONAL ADVISORY COMMITTEE
FOR AERONAUTICS

JUL 19 1926

JUL 16 1926
MAILED

TO: Library, L.M.A.L.

[redacted]

TECHNICAL NOTES

NATIONAL ADVISORY COMMITTEE FOR AERONAUTICS

No. 241

TESTS OF SEVERAL BEARING MATERIALS LUBRICATED BY GASOLINE

By W. F. Joachim and Harold W. Case
Langley Memorial Aeronautical Laboratory

FILE COPY
To be returned to
the files of the Langley
Memorial Aeronautical
Laboratory

Washington
July, 1926

NASA Technical Library
3 1176 01425 6201

NATIONAL ADVISORY COMMITTEE FOR AERONAUTICS.

TECHNICAL NOTE NO. 241.

TESTS OF SEVERAL BEARING MATERIALS LUBRICATED BY GASOLINE.

By W. F. Joachim and Harold W. Case.

Summary

This investigation on the relative wear of several bearing materials lubricated by gasoline was conducted at the Langley Memorial Aeronautical Laboratory, Langley Field, Virginia, as part of a general research on fuel injection engines for aircraft. The specific purpose of the work was to find a durable bearing material for gear pumps to be used for the delivery of gasoline and Diesel engine fuel oil at moderate pressures to the high pressure pumps of fuel injection engines.

The bearing surfaces were prepared for test by scraping, and by wearing them in under load with the shafts. The bearings were then baked and weighed to within 0.003 grain on analytical balances. The bearings were held in rockers attached to the bottom of a gasoline tank and to a lever, and the loads imposed by weighing the lever. The tests were made with 0.5 in. diameter shafts turning at approximately 1200 R.P.M., the shafts and bearings being immersed in gasoline. The wear was determined by baking and weighing the bearings after test.

Eighteen bearing materials were tested. These tests in-

cluded determinations of the wear of two bearing materials at various loads with both machine steel and hardened tool steel shafts; seizing load tests of 16 bearing materials; and wear tests of 8 bearing materials, selected from the seizing load tests, at a load of 250 lb. per sq.in. with hardened tool steel shafts. When a machine steel shaft was used, the seizing load for a commercial hard bronze was about 65 lb. per sq.in., and for another commercial, but softer more porous bronze, it was about 80 lb. per sq.in. With a hardened tool steel shaft, the seizing load for the hard bronze was about 115 lb. per sq.in., and for the soft bronze it was about 210 lb. per sq.in. Special bearing bronzes, containing lead up to approximately 35 per cent or graphite up to approximately 50 per cent, carried loads up to 500 lb. per sq.in. without seizing, though in all cases considerable wear occurred above a load of about 300 lb. per sq.in. The wear obtained in the tests on the 8 selected bearing materials ranged from 0.53 to 21.55 grains per million turns per square inch of bearing contact surface. The least wear was obtained with a hard alloy of graphite and powdered bronze pressed and sintered at high temperature.

It was found that, with a machine steel shaft, a hard bearing material had less wear below the seizing load than a soft bearing material. These results were reversed with a hardened tool steel shaft. Soft bearing materials and bearing alloys containing special anti-friction metal or graphite have higher

seizing loads than hard bearing materials for either kind of shaft. These tests indicate that a porous bearing material, sufficiently hard to support the loads imposed and containing anti-friction materials and relatively hard crystals to minimize wear, will give durable service with a hardened tool steel shaft.

Introduction

Research on fuel injection engines for aircraft at the Langley Memorial Aeronautical Laboratory, has required the pumping of gasoline and Diesel engine fuel oil at pressures up to 500 lb. per sq.in. A small commercial bronze gear pump designed to circulate liquids at low pressures was used for preliminary work. In this service the wear on this pump was rapid enough to necessitate frequent repair.

Many researches have been made relative to the wear of bearings lubricated by oil, but no work has been done, as far as is known, relative to the wear of bearings lubricated by gasoline. This report deals with various tests conducted on 18 different bearing materials, tested in the form of half-bearings and bushings in a bath of gasoline. Shafts ground to a diameter of 0.5 in. were used. The first part of the investigation was made with a machine steel shaft rotated at about 1200 R.P.M. in half bearings 0.75 in. long. Two bearings of a hard bronze and two of a soft bronze were used, wear tests being made at various

loads. These tests were repeated in the second part of the investigation, with a hardened tool steel shaft. The third part of the investigation consisted of seizing load tests on 16 bearing materials. These bearings were in the form of bushings, and hardened tool steel shafts and loads from 150 lb. per sq.in. to 500 lb. per sq.in. by 50 lb. increments were used. The last part consisted in making wear tests, with hardened tool steel shafts rotated at about 1150 R.P.M., on 8 bearing materials selected from the seizing load tests. These bearings were subjected to a 15-hour wear test at a load of 250 lb. per sq.in.

Methods and Apparatus

The bearings were mounted in rockers and tested in a bath of gasoline with machine steel and hardened tool-steel shafts rotated at about 1200 R.P.M. Wear was determined from carefully made weighings of the bearings taken before and after the tests.

The bearings were prepared for test by alternately scraping the bearing surfaces and wearing them in under load with the shafts. This method was used to obtain a good bearing surface in a short time. The bearings were then heated in an electric furnace at a temperature of 250°F for eight hours, removed from the furnace, and allowed to cool in an analytical balance case. The air in the balance case was maintained at practically constant humidity by calcium and zinc chlorides which were frequently replaced.

The weights of the bearings in grams were determined on the analytical balances. The sensitivity factor, the zero of the balance, and the zero with a bearing and weights on the pans were determined by the method of right and left swings. The weight of the bearing was then determined by the direct method (Reference 1).

Four prepared bearings were mounted in the test apparatus and loaded by applying a known weight to the loading lever. The shaft was rotated in the bearings at about 1200 R.P.M., for a length of time sufficient to give a relatively large amount of wear. The speed of the shaft was determined by a counter held against the end of the motor shaft for five minutes. Hourly readings of shaft speed and gasoline temperature were made during the tests on the half bearings, and at more frequent intervals during the tests on the bushing bearings.

Following the wear test, the bearings were again baked and weighed in the manner described above. The unit loads were calculated in two ways; first, by using a 100 per cent bearing contact area and second, by using the carefully estimated per cents of actual contact surface. This procedure was followed in making all wear tests.

A diagrammatic sketch of the test apparatus is shown in Fig. 1. This apparatus was designed to accommodate four test bearings. The two lower bearings were mounted on rods at the opposite ends of a rocker fastened to the bottom of the gasoline

tank. The two top bearings were staggered with respect to the lower ones and mounted in a similar rocker fastened to the loading lever. Thus the rockers and bearings were allowed to adjust themselves to the alignment of the shaft, and equal loading and separate bearing positions were provided for each bearing. The length of the loading lever and the size of the bearings provided a unit bearing load equal to 13-1/3 times the lever load. The shaft was direct-driven by a 1/2 HP. induction motor mounted on a frame free to rotate about a horizontal axis perpendicular to the shaft. This assembly was balanced to eliminate any unequal loading on the bearings.

The specifications of the bearings tested in this research are given in Table I.

Results

Wear-load curves for the ordinary hard and soft commercial bronzes, bearing numbers 5 and 7, and 6 and 8 respectively, with machine steel shafts, are plotted in Fig. 2. The wear for these bearings with the hardened tool steel shafts is plotted in Fig. 3. The data and calculated results are given in Tables II and III. Although the amount of the data obtained was insufficient to determine the exact form of the curves, average curves were drawn and care was taken to follow the general trend of all the data. It was found that when the seizing load of a bearing was approached, a small increase in the load resulted in

a large increase in wear. Because of this fact and the trend of the data, the wear-load curves, at this point, are practically perpendicular.

The curves plotted in Fig. 2 indicate that, when a machine steel shaft is used, the maximum permissible bearing load for a hard bronze is about 65 lb. per sq.in., and for a soft bronze it is about 80 lb. per sq.in. The curves plotted in Fig. 3 indicate that, when a hardened tool steel shaft is used, the maximum permissible bearing load for a hard bronze is about 115 lb. per sq.in., and for a soft bronze it is about 210 lb. per sq.in. For a load of 60 lb. per sq.in., which is within the seizing limits, the wear for a hard bronze is about 0.09 grain with a machine steel shaft and about 0.11 grain with a hardened tool steel shaft. In this case there is very little difference in the wear on a hard bronze caused by either shaft. However, the wear for a soft bronze is about 0.27 grain with a machine steel shaft and about 0.08 grain with a hardened tool steel shaft. From the latter comparison, it is noted that an advantage is gained by the use of a hardened tool steel shaft with a soft bronze. These results apply when the rubbing velocity between shaft and half bearing does not exceed about 155 ft. per min., and the temperature of the gasoline-bath does not exceed about 125°F.

FILE COPY
To be returned to
the files of the
Memorial Aeronautical
Laboratory

The seizing load tests indicated that all bearings carried loads up to about 300 lb. per sq.in. without appreciable wear.

The rate of wear for loads above 300 lb. per sq.in., however, was considerably increased as was indicated by the large number of metal particles observed in the gasoline. Bearing No. 142, which was the only bearing to actually fail within the limits of these tests, seized at a load of about 415 lb. per sq.in.

Various considerations entered into the selection of bearing materials for the second series of wear tests. Bearings of like specifications would probably give similar results. Hard bearings wear less than soft bearings. Thus, from two or more bearings, containing the same materials and approximately the same percentage of each, the hardest bearing was selected for these tests. Those with graphite inlaid in grooves were not tested for wear because the metal surface to support the load was comparatively small, and greater wear was noted during the seizing load tests. Also bearings having relatively low operating temperature-limits, in addition to those which could not be used in the presence of water or alcohol, were not tested. The wood bearing was selected to represent a different type from that ordinarily used.

The wear of the 8 different bearing materials, which were subjected to a load of 250 lb. per sq.in. for 15 hours, is given in Table IV. Bearing No. 81, a patented mixture of graphite and bronze powder, pressed and sintered at a high temperature, had the least amount of wear with a loss of 0.53 grain per million turns per sq.in. of bearing contact area. A wood bearing

No. 151, had the greatest amount of wear with a loss of 21.55 grains per million turns per sq. in. Bearing No. 11 had the greatest wear of all the metal bushings with a loss of 5.80 grains per million turns per sq. in. The wearing quality of the commercial wood bushing, which is chemically treated, was probably decreased by evaporation of the chemical during the baking process previous to the initial set of weighings. A slight loss of weight, in addition to that resulting from wear, was probably caused by some evaporation of the chemical during the baking process previous to the second series of weighings. The results of these wear tests apply when the rubbing velocity between shaft and bushing does not exceed about 150 ft. per min., and the temperature of the gasoline bath does not exceed about 130°F.

The wear on the hardened tool steel shafts was judged by careful inspection following the completion of the second series of wear tests. That part of the shaft under bearing No. 11 showed the least wear, and that part operated with bearing No. 101 showed the greatest wear. This is logical since bearing No. 11 was relatively soft and showed the greatest wear of the metal bushings, and bearing No. 101 was quite hard and showed next to the least wear of all the bushings. There was only a slight difference in shaft wear between bearing No. 11, which had next to the greatest bearing wear, and bearing No. 81, which had the least bearing wear. The order of wear on the

shafts from the least to the greatest was with bearing Nos. 11, 81, 151, 142, 106, 91, 111, and 101 respectively.

Although some circulation of gasoline around the bearings was caused by the rotation of the shaft, less cooling took place than would occur in an actual gear pump. All bearings suffered additional wear due to the cutting action of small metal particles from the bearings. Because of these two factors, the test conditions were more severe than would be encountered in practice where fuel strainers are provided and additional cooling is afforded by better circulation of the fuel.

The accuracy of these tests was determined by the ability to estimate the percentage of actual contact bearing area, and by the sensitivity of the analytical balances and the speed of the shaft during the tests. A small part of the total loss was carried, in the case of bearings with less than 100 per cent contact area, by the thin film of gasoline between the shaft and that part of the bearing surface which was not in actual metallic contact. The errors affecting the results were not more than .003 grain for the weight determinations, 5 R.P.M. for the shaft speed and 5 per cent for the percentage of estimated bearing contact area.

Conclusions

The information obtained, supplies the necessary data for the selection of bearings for primary gear pumps for pumping

gasoline and Diesel engine fuel oil under moderate pressures.

It is concluded from these tests that with gasoline as a lubricant and when a machine steel shaft is used, a hard bearing material has less wear, below the seizing load than a soft bearing material. These results are reversed when a hardened tool steel shaft is used. Hard bearing materials generally cause more wear on the shaft than soft bearing materials. Soft bearing materials and bearing alloys, containing special anti-friction metals or graphite, have higher seizing loads than hard bearing materials for either kind of shaft.

These tests indicate that a porous bearing material, sufficiently hard to support the loads imposed and containing anti-friction materials and relatively hard crystals to minimize wear, will give durable service with a hardened tool steel shaft.

Reference

1. Bureau of Standards: Design and Test of Standards of Mass. Circular No. 3, December 23, 1918. Page 36.

Table I.

Bearing Specifications

Bearings subjected to both wear and seizing tests:

Bearings Nos. 5 and 7 -	A dense, hard commercial bronze which contains no special anti-friction materials and has a melting point of 600°F. As stated by the manufacturer, it is capable of carrying a load of 9700 lb. per sq.in. without distortion.
6 and 8 -	A semi-porous and relatively soft commercial bronze which contains no special anti-friction materials and is composed of 86.5 per cent copper, 11.0 per cent tin, and 2.5 per cent zinc.
Bearing No. 11 -	A relatively soft graphited copper-lead alloy which has a melting point of 1400°F and is specially suited to resist corrosion. This material shows a definite separation of graphite and is said to be difficult to manufacture.
81 -	A fine mechanical mixture which is relatively soft and porous. This material is made from a mixture of graphite and bronze powder which has been pressed and sintered at a high temperature.
91 -	A dense bronze which contains 20.0 per cent lead and has a melting point of 1700°F, and a Brinnell hardness of 50. It sweats lead at 600°F, and is especially designed to operate under severe conditions without lubrication.

Table I (Cont.)

Bearing No.	101 -	A relatively hard and slightly porous bronze which is composed of 70.0 per cent copper, 24.0 per cent lead, and 6.0 per cent tin.
	106 -	A relatively soft and slightly porous bronze which shows an appreciable separation of lead and is composed of 70.0 per cent copper and 30.0 per cent lead.
	111 -	A slightly porous lead-bronze alloy which shows some separation of lead nad has a Brinnell hardness of 32.
	142 -	A chemically produced resin which is made from phenol and formaldehyde and has canvas reenforcement.
	151 -	A chemically treated wood bearing.

Bearings subjected to seizing tests only:

Bearing No.	21 -	A soft graphited lead which has a melting point of 460°F, and a temperature limit of 200°F. It can be used with any liquid.
	31 -	A relatively hard alloy of aluminum, zinc and copper which has a melting point of 860°F, and a temperature limit of 600°F. It cannot be used with water or alcohol.
	41 -	A relatively hard alloy of zinc, aluminum and copper which has a melting point of 760°F, and a temperature limit of 400°F. It cannot be used with water or alcohol.

Table I (Cont.)

Bearings subjected to seizing tests only:

Bearing No. 51 -	A relatively hard bronze with graphite inlaid in criss-cross grooves. No data were given by the manufacturer.
61 -	A cast iron bearing with graphite inlaid in criss-cross grooves. No data were given by the manufacturer.
71 -	A relatively hard bronze with graphite inlaid in spiral grooves. No data were given by the manufacturer.
96 -	A slightly porous bronze which contains 35.0 per cent lead and has a melting point of 1700°F, and a Brinnell hardness of 40. It sweats lead at 600°F and is especially designed to operate under severe conditions without lubrication
120 -	A slightly porous bronze which is composed of approximately 75.0 per cent copper, 20.0 per cent lead, and 5.0 per cent tin and has a Brinnell hardness of 45.

Table II.

Results for Four Half Bearings Operated with a Machine Steel Shaft.

Test No.	1	2	3	4
Duration of test - hr.	37.6	20.7	46.8	21.1
Shaft Speed - Av. R.P.M.	1204	1204	1204	1194
Approx. Shaft Revs.	2,718,000	1,497,000	3,385,000	1,513,000
Lever load - lb.	2.219	5.469	4.219	6.281
Gasoline Temp. - Av. °F	69	77	72	103

Test No.	Bearing No.	Bearing contact area %	Wt. in grams Initial	Wt. in grams Final	Wear in grams	Bearing load 100% area
1	5	85	41.4859	41.4845	.0014	29.6
2	"	85	41.4845	41.4730	.0115	72.9
3	"	85	41.4730	41.4704	.0026	56.2
4	"	100	41.4704	40.8300	.6404	83.8
1	7	95	41.9277	41.9239	.0038	29.6
2	"	100	41.9239	41.8876	.0363	72.9
3	"	100	41.8876	41.8817	.0059	56.2
4	"	100	41.8817	41.7200	.1617	83.8
1	6	75	40.0868	40.0786	.0082	29.6
2	"	75	40.0786	40.0718	.0068	72.9
3	"	75	40.0718	40.0693	.0025	56.2
4	"	80	40.0693	40.0070	.0623	83.8
1	8	100	42.0078	41.9982	.0096	29.6
2	"	100	41.9982	41.9865	.0117	72.9
3	"	100	41.9865	41.9808	.0057	56.2
4	"	100	41.9808	41.9347	.0461	83.8

Table II (Cont.)

Results for Four Half Bearings Operated

with a Machine Steel Shaft.

Duration of Test - hr.	37.6	20.7	46.8	21.1
Shaft speed - Av. R.P.M.	1204	1204	1204	1194
Approx. Shaft Revs.	2,718,000	1,497,000	3,385,000	1,513,000
Lever load - lb.	2.219	5.469	4.219	6.281
Gasoline temp. - Av. °F	69	77	72	103

Test No.	Bearing No.	Bearing contact area %	Loss/Million turns/sq.in. with 100% area		Bearing load estim. area	Loss/Million turns/sq.in. with est. area	
			grams	grains		grams	grains
1	5	85	.0013	.0212	34.8	.0016	.0249
2	"	85	.0204	.3155	85.8	.0241	.3710
3	"	85	.0020	.0316	66.2	.0024	.0371
4	"	100	1.1270	17.3700	83.8	1.1270	17.3700
1	7	95	.0037	.0575	31.1	.0039	.0604
2	"	100	.0646	.9950	72.9	.0646	.9950
3	"	100	.0046	.0717	56.2	.0046	.0717
4	"	100	.2852	4.3850	83.8	.2852	4.3850
1	6	75	.0080	.1240	39.4	.0107	.1652
2	"	75	.0121	.1867	97.2	.0161	.2485
3	"	75	.0019	.0303	74.9	.0026	.0404
4	"	80	.1098	1.6950	104.7	.1373	2.1140
1	8	100	.0094	.1450	29.6	.0094	.1450
2	"	100	.0208	.3207	72.9	.0208	.3207
3	"	100	.0045	.0692	56.2	.0045	.0692
4	"	100	.0812	1.2500	83.8	.0812	1.2500

Table III.

Results for Four Half Bearings Operated

with a Hardened Tool Steel Shaft.

Test No.	5	6	7
Duration of Test - hr.	46.9	27.9	16.5
Shaft speed - Av. R.P.M.	1203	1199	1168
Approx. Shaft Revs.	3,387,000	2,007,000	1,157,000
Lever load - lb.	2.969	7.500	15.031
Gasoline temp. - Av. °F	75	82	124

Test No.	Bearing No.	Bearing contact area %	Wt. in grams		Wear in grams	Bearing load 100% area
			Initial	Final		
5	5	75	40.7009	40.6954	.0055	39.6
6	"	80	40.6954	40.6656	.0298	100.0
7	"	95	40.6656	39.7000	.9656	200.5
5	7	80	41.6518	41.6467	.0051	39.6
6	"	70	41.6467	41.6335	.0132	100.0
7	"	90	41.6335	41.1350	.4985	200.5
5	6	90	39.9946	39.9901	.0045	39.6
6	"	70	39.9901	39.9856	.0045	100.0
7	"	85	39.9856	39.8945	.0911	200.5
5	8	60	41.9095	41.9068	.0027	39.6
6	"	70	41.9068	41.8996	.0072	100.0
7	"	80	41.8996	41.8659	.0337	200.5

Table III (Cont.)

Results for Four Half Bearings Operated

with a Hardened Tool Steel Shaft.

Test No.	5	6	7
Duration of Test - hr.	46.9	27.9	16.5
Shaft speed - Av. R.P.M.	1203	1199	1168
Approx. Shaft Revs.	3,387,000	2,007,000	1,157,000
Lever load - lb.	2.969	7.500	15.031
Gasoline temp. - Av. °F	75	82	121

Test No.	Bearing No.	Bearing contact area %	Loss/Million turns/sq. in. with 100% area		Bearing load est. area	Loss/Million turns/sq. in. with est. area	
			grams	grains		grams	grains
5	5	75	.0043	.0668	52.8	.0057	.0889
6	"	80	.0396	.6120	125.0	.0494	.7620
7	"	95	2.2250	34.3500	211.0	2.3380	36.0500
5	7	80	.0040	.0620	49.5	.0050	.0773
6	"	70	.0175	.2708	142.7	.0250	.3855
7	"	90	1.1480	17.7300	222.7	1.2760	19.6500
5	6	90	.0035	.0547	44.0	.0039	.0607
6	"	70	.0059	.0923	142.7	.0085	.1314
7	"	85	.2098	3.2400	235.7	.2467	3.8020
5	8	60	.0022	.0328	66.0	.0035	.0546
6	"	70	.0095	.1477	142.7	.0136	.2104
6	"	80	.0776	1.1980	250.5	.0970	1.4935

Table IV.

Results for Eight Bushing Bearings.

Duration of Tests - 15 hr.

Approximate Shaft Speed - 1150 R.P.M.

" " Revolutions - 1,035,000.

Lever Load - 18.750 lb.

Average Gasoline Temperature - 120°F.

Shaft - hardened tool steel.

Bearing No.	Bearing contact area %	Wt. in grams Initial	Wt. in grams Final	Wear in grams	Bearing load 100% area
81	60	89.4005	89.3925	.0080	250
101	95	98.8396	98.8168	.0228	250
142	95	75.5187	75.4948	.0239	250
111	90	98.4308	98.3900	.0408	250
106	90	99.9634	99.9198	.0436	250
91	95	98.6994	98.6526	.0468	250
11	75	93.4837	93.3743	.1094	250
151	95	80.1036	79.5886	.5150	250

Bearing No.	Bearing contact area %	Loss/Million turns/sq.in. with 100% area grams	Loss/Million turns/sq.in. with 100% area grains	Bearing load est. area	Loss/Million turns/sq.in. with est. area grams	Loss/Million turns/sq.in. with est. area grains
81	60	.0206	.3174	417	.0343	.530
101	95	.0588	.9050	263	.0618	.953
142	95	.0616	.9485	263	.0648	1.000
111	90	.1053	1.6210	278	.1168	1.803
106	90	.1123	1.7280	278	.1248	1.927
91	95	.1206	1.8570	263	.1270	1.960
11	75	.2820	4.3440	334	.3760	5.810
151	95	1.3265	20.4400	263	1.3965	21.550

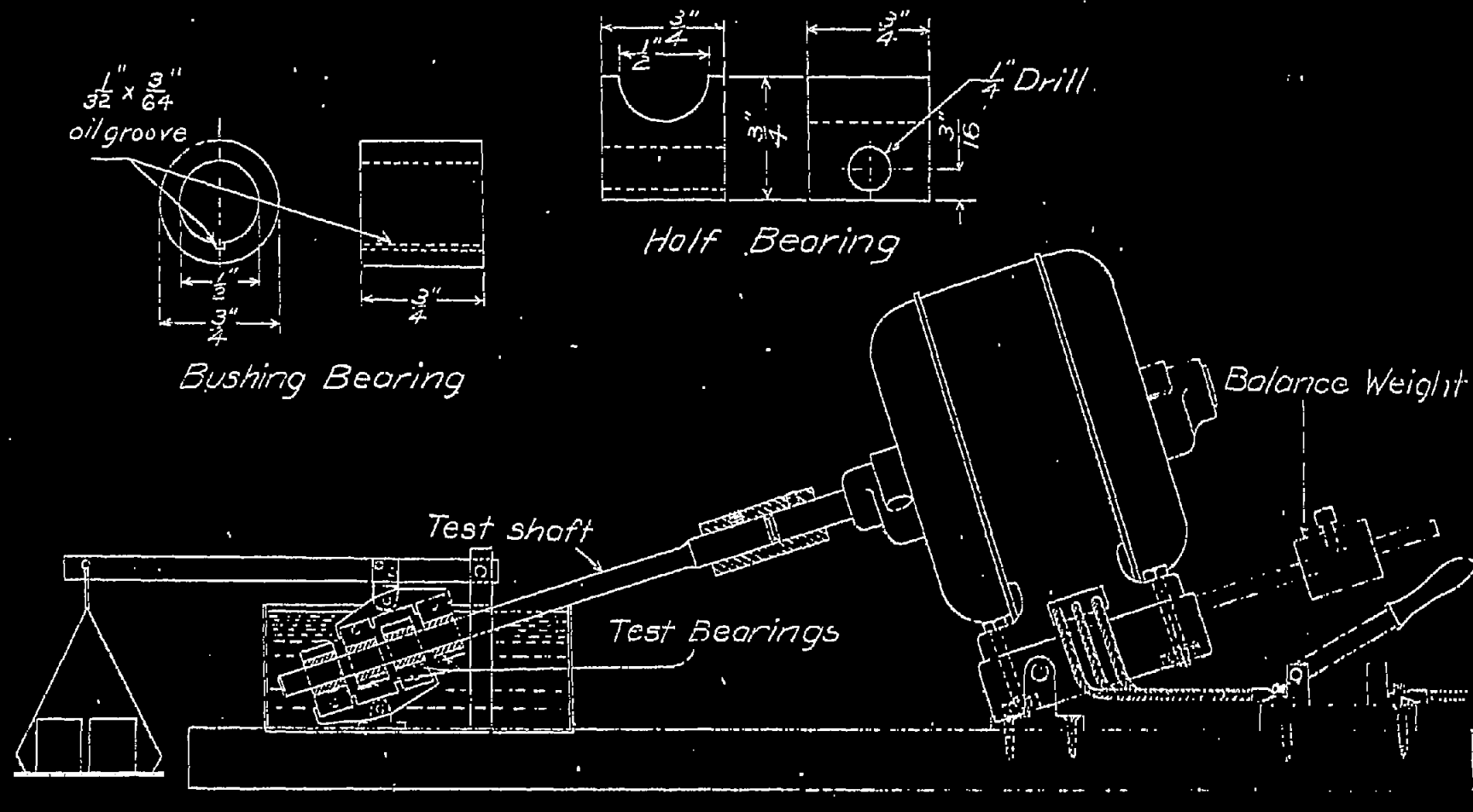

Fig. 1 Diagrammatic Sketch of Bearing Test Apparatus

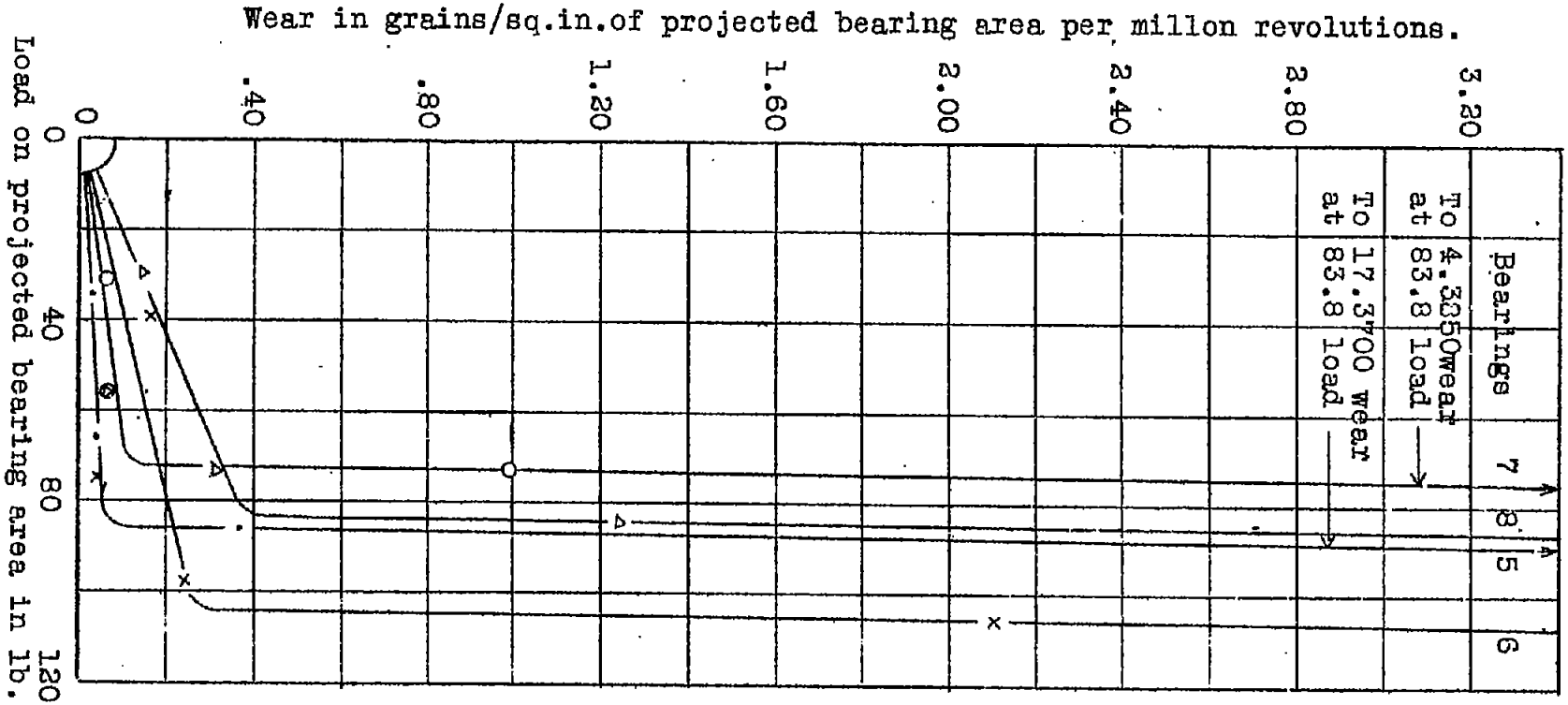

Fig.2 Wear-load curves for a machine steel shaft. Curves 5 & 7 represent the wear for a dense hard bronze; curves 6 & 8 represent the wear for a relatively soft, semi-porous bronze composed of copper 86.5%, tin 11% & zinc 2.5%. Shaft: speed 1200 R.P.M., diameter 1/2 inch, lubricant, commercial-aviation gasoline.

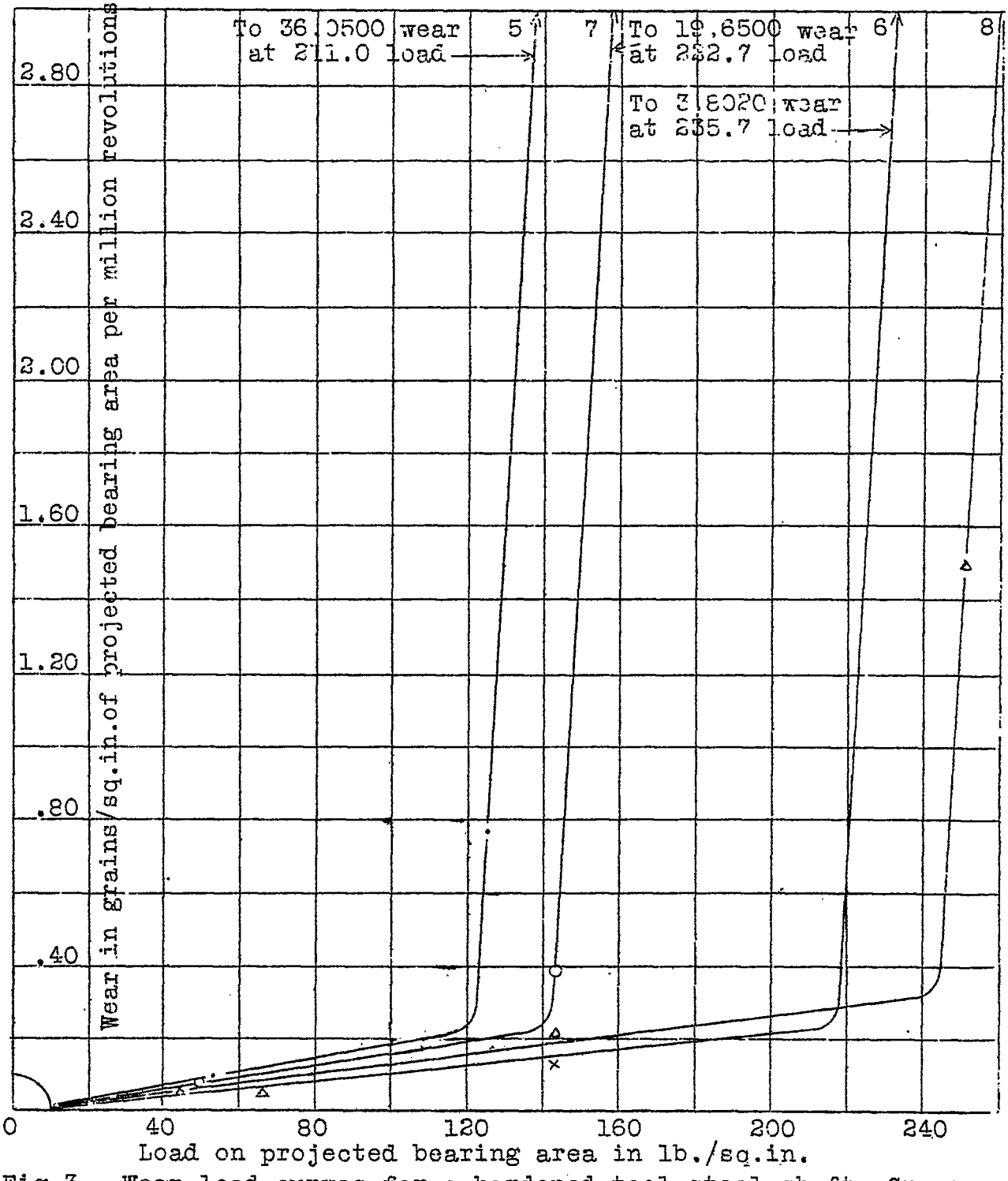

Fig.3 Wear-load curves for a hardened tool steel shaft. Curves 5 & 7 represent the wear for a dense hard bronze; Curves 6 & 8 represent the wear for a relatively soft, semi-porous bronze composed of copper 86.5%, tin 11% & zinc 2.5%. Shaft: speed 1200 R.P.M., diameter 1/2 inch, lubricant, commercial-aviation gasoline.

List of Bearing Manufacturers

"Tests of Several Bearing Materials Lubricated by Gasoline"

Bearing No. 5 & 7	The American Crucible Products Co., Elyria, O.
6 & 8	American Bronze Corp., Berwyn, Pa.
11, 21, 31 & 41	Neveroil Bearing Co., Wakefield, Mass.
51 & 61	Randall Graphite Products Corp., Chicago, Ill.
71	Bound Brook Oilless Bearing Co., Bound Brook, N.J.
81 & 142	General Electric Co., Schenectady, N. Y.
91 & 96	Stewart Manufacturing Corp., Chicago, Ill.
101 &106	Wright Aeronautical Corp., Patterson, N.J.
111	Achermite Company of America, Chicago, Ill.
120	Ajax Metal Company, Philadelphia, Pa.
151	Arguto Oilless Bearing Co., Wayne Junction, Philadelphia, Pa.