REPORT No. 239

POWER OUTPUT AND AIR REQUIREMENTS OF A TWO-STROKE CYCLE ENGINE FOR AERONAUTICAL USE

By C. R. PATON and CARLTON KEMPER
Langley Memorial Aeronautical Laboratory

REPORT No. 239

POWER OUTPUT AND AIR REQUIREMENTS OF A TWO-STROKE CYCLE ENGINE FOR AERONAUTICAL USE

By C. R. Paton and Carlton Kemper

SUMMARY

The investigation herein reported was undertaken by the National Advisory Committee for Aeronautics at its research laboratory, Langley Field, Va., in order to determine the pressure and amount of air necessary for satisfactory high-speed two-stroke cycle operation and thus permit the power requirements of the air pump or blower to be determined. Assembly and development of the apparatus and preliminary work in connection with the fuel-injection system were done under the direction of Mr. Robertson Matthews.

The object of this investigation was to determine the pressure and amount of air necessary for satisfactory scavenging and operation of a high-speed, two-stroke cycle engine for aeronautical use, a 5 by 7 inch single-cylinder Liberty test engine being adapted for the purpose. The fuel and scavenging system consisted of a fuel-injection pump and injection valve, used in conjunction with a separately driven Roots type blower. Tests were conducted at speeds of 1,000, 1,200, and 1,300 revolutions per minute, with air-supply pressures from 2 to 6 lb./sq. in. gauge, and results show, that 53 brake horsepower could be developed at 1,300 revolutions per minute, with a scavenging air pressure of 5.5 lb./sq. in., a specific air consumption of 9 lb./B.HP./hr., and a specific fuel consumption of 0.61 lb./B.HP./hr. Under these conditions 3 horsepower was required to supply the air, resulting in a net power output of 50 brake horsepower. A minimum specific air consumption of 8.4 lb./B.HP. was obtained at this speed with an air-supply pressure of approximately 3.5 lb./sq. in. when developing 41 brake horsepower. Chattering of cam-operated exhaust valves prevented higher speeds.

Based on power output and air requirement here obtained the two-stroke cycle engine would seem to be favorable for aeronautical use. No attempts were made to secure satisfactory operation at idling speeds.

INTRODUCTION

It has frequently been proposed to use engines operating on the two-stroke cycle for aircraft, because of the inherent possibilities of obtaining decreased weight per horsepower. In order, however, to operate economically at high speeds and high mean effective pressure, some auxiliary means of scavenging, that would tend to avoid loss of fuel with the exhaust, is necessary. Special attention has been recently directed toward the use of a compressor or blower to supply the necessary air for scavenging, as well as for combustion, in order to increase the power output.

To estimate the performance of such an engine, among other things the power required by the air pump or blower must be considered. This is dependent on the pressure and amount of air necessary for satisfactory scavenging. No adequate information was available concerning these requirements for high-speed two-stroke cycle engines.

Considerable research and development work had been done along these lines but most of it was applicable to engines operating at relatively low speeds. During the war, Doctor Junkers, in Germany, developed (Reference 1) a 500-horsepower, six-cylinder, valveless two-stroke

cycle engine for aviation purposes having two opposed pistons per cylinder and using airless fuel injection, electric ignition, and a direct connected scavenging blower. Operation was reported to be satisfactory at 2,000 revolutions per minute. However, work on this engine was discontinued at the close of the war and no test results were available concerning its air requirements.

DESCRIPTION OF EQUIPMENT

ENGINE AND AIR SYSTEM

For the purpose of this investigation a single cylinder Liberty test engine, having a 5-inch bore and 7-inch stroke, was used. It was altered as necessary to permit its operation on the two-stroke cycle with domestic aviation gasoline as fuel and with the usual electric ignition. The standard Liberty cylinder was altered as shown in Figure 1, mounted on a single cylinder crank case and the engine connected to an electric cradle type dynamometer. Air was supplied at various pressures by a separately driven Roots blower and fuel was sprayed into the air, as it entered the cylinder, by a cam actuated fuel injection pump and spring loaded fuel injection valve. This airless fuel injection system, substituted for the usual carbureter, allowed the time of injection to be so delayed as to prevent the loss of fuel with the exhaust gases and scavenging air. As shown, inlet ports were provided in the cylinder wall which communicated with a box to which air was supplied under pressure by the blower. Both valves in the head were used for exhaust and were operated by a modified Liberty valve mechanism. Exhaust through valves in the head was adopted primarily to facilitate the necessary alterations to the Liberty cylinder, it being more difficult to provide suitably cooled exhaust ports at the base of the cylinder than to exhaust through the two valves in the head, where suitable cooling was already provided. Figure 2 shows a diagram of the timing of ports and valves. Scavenging air entered the cylinder as the piston uncovered the ports; the injection of fuel into the air being delayed to insure that the minimum amount would be carried out through the exhaust with the scavenging air.

FIG. 1.—Two-stroke Liberty adaption, showing extent of jacket removed to accommodate inlet ports and air box, also amount standard piston overtravels inlet ports

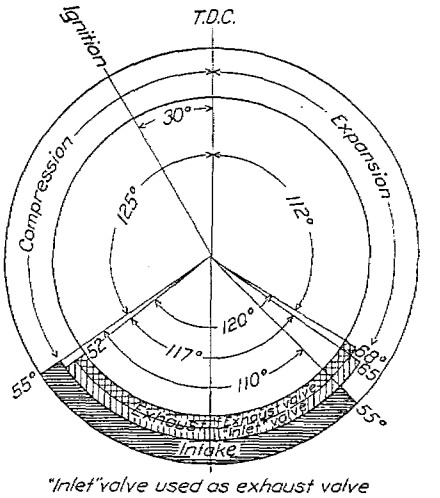

FIG. 2.—Two-stroke cycle valve timing

The piston used was similar in form to the standard Liberty high compression type and gave an effective compression ratio, considering the reduction in effective stroke caused by the presence of the inlet ports, of 4.7 to 1. A

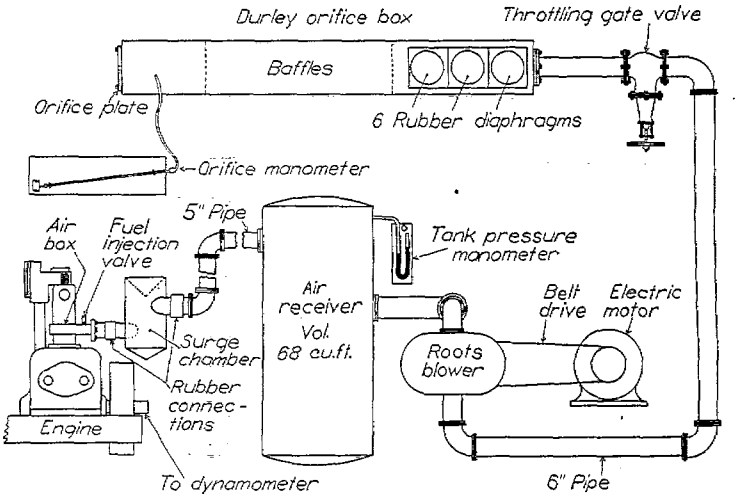

FIG. 3.—Diagrammatic sketch of air system

piston having a skirt sufficiently long to cover the ports with the piston at the top of the stroke could not readily be adapted; therefore the crank case was closed and subjected to approximately the same mean pressure as the air supplied to the engine.

A diagrammatic sketch of the apparatus used for measuring and supplying air under pressure is shown in Figure 3, a standard 2-inch Durley orifice (References 2 and 3) being used to determine the air consumption. Pressure fluctuations normally existing as a result of the operation of the blower and of the intermittent flow to the engine were reduced by a combination of a throttling valve, rubber diaphragms, large capacity receivers, and baffles so that this method should give fairly reliable results. A small surge chamber was placed as near the engine as possible to insure freedom from irregular operation due to surging in the air line.

FUEL SYSTEM

The fuel system comprised a primary gear pump, supplying fuel at a pressure of 70 lb./sq. in. to a cam-actuated plunger type injection pump, which in turn supplied fuel to a spring-loaded

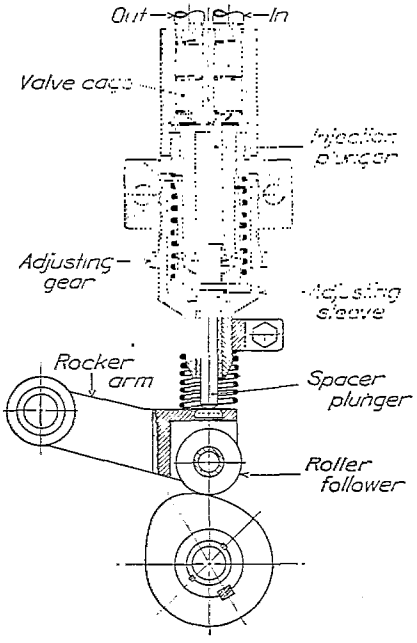

FIG. 4.—Fuel injection pump

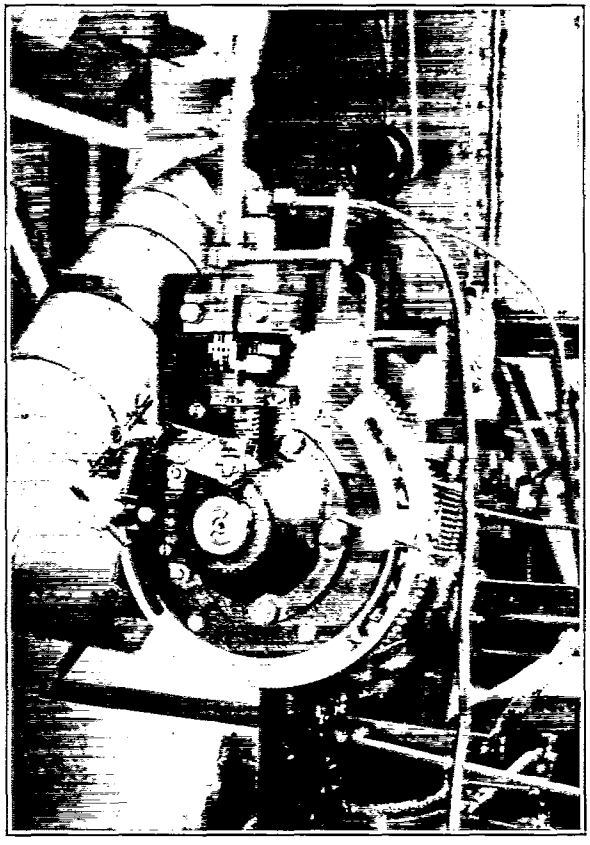

FIG. 5.—Fuel injection pump and timing mechanism

injection nozzle. The nozzle was arranged to spray the fuel into the air as it entered the engine cylinder, the spray being directed against the air stream. This location and arrangement of the nozzle was selected after trials which showed it to give the maximum power output.

A sketch of the injection pump is shown in Figure 4. The cam operates the pump plunger by means of a rocker arm having a roller follower. A threaded adjusting sleeve operated by a gear and hand crank (fig. 5) limits the suction stroke of this plunger, thereby, controlling the quantity of fuel injected per cycle. The hub of this sleeve is graduated, permitting accurate adjustment of the pump stroke from zero to the maximum cam lift of 0.200 inch by increments of 0.005 inch. The best results were obtained with a plunger diameter of 0.53 inch; only approximately one-fourth of the available plunger stroke was required for the maximum power developed. The injection pump is mounted on a special timing head (shown in figs. 5 and 6). A convenient hand wheel operating a worm permits adjustment of the injection timing while the engine is operating.

A sketch of the fuel injection valve is shown in Figure 7. The needle valve has a lapped fit in the valve body and is lifted by the fuel pressure on the exposed cross section of the stem.

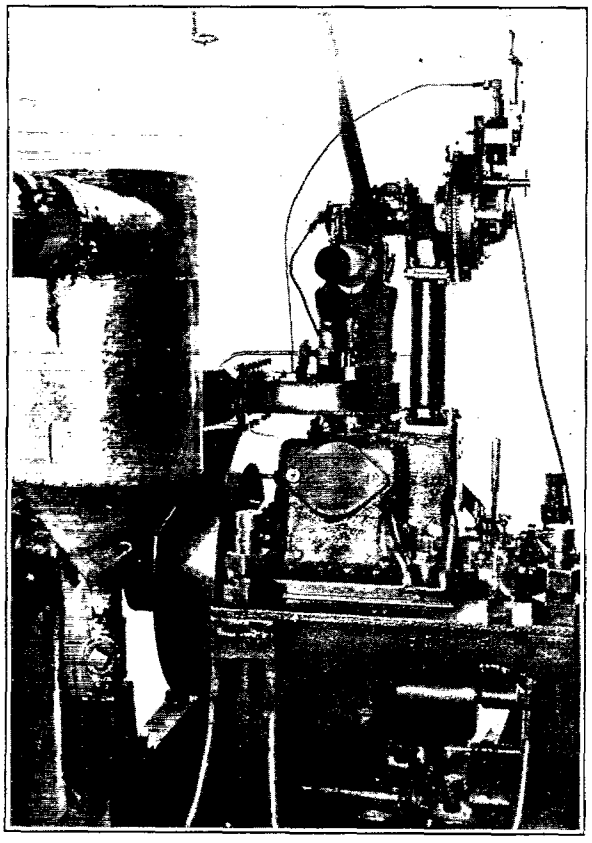

FIG. 6.—Liberty single cylinder two-stroke cycle engine

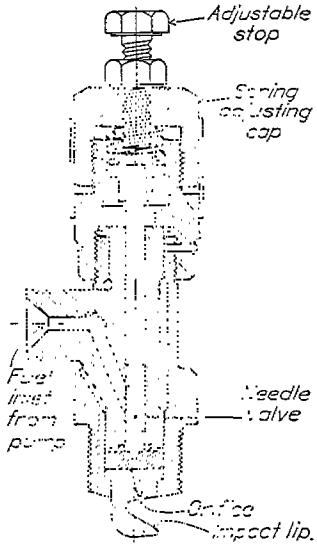

FIG. 7.—Fuel injection valve

An adjustable spring governs the pressure at which the valve opens. For these tests the spring was adjusted to permit opening of the valve when a static pressure of approximately 1,600 lb./sq. in. was applied. The nozzle has two holes of 0.022 inch diameter, which direct the fuel against an impact lip.

The discharge characteristics of the complete fuel injection system have been reported in N. A. C. A. Technical Note No. 213.

METHOD OF TESTING

The method of obtaining the performance data was to operate the engine with a fixed air supply pressure, selecting by trial, a suitable pump stroke (fuel quantity) and pump timing to give maximum power with minimum fuel consumption at speeds of 1,000, 1,200, and 1,300 revolutions per minute. Tests were then made with the pump stroke reduced until a decrease of approximately 1 per cent in power was observed. In order to insure that the most suitable pump timing had been used, tests were also made with the timing both slightly advanced and retarded from the position originally selected. The air supply pressure was then increased and similar tests made. Air supply pressures from approximately 2 to 5.5 lb./sq. in. gauge, were used and the air and fuel consumption and power output determined for air-fuel ratios giving both maximum power and approximately 99 per cent maximum power.

The air consumption was determined as previously stated, with a standard 2-inch Durley orifice after special precautions had been taken to insure air flow, free from troublesome pressure fluctuations. A sensitive recording manometer (Reference 4) was used to determine the pressure fluctuations at the orifice and with its aid a combination of a throttling valve, rubber diaphragms, large capacity receivers and baffles was selected which reduced these fluctuations to a degree which was considered satisfactory. Since fluctuating pressures have been shown to tend to exaggerate the true amount of the air flow (Reference 5), the air quantities recorded are, if anything, slightly too large. Air-fuel ratios obtained during the tests, as computed from these air measurements indicate, however, that the air quantities were not unreasonably large. Pressure drop at the orifice was determined with an inclined manometer reading to 0.01 inch of water and the air supply pressures recorded were determined by means of a mercury manometer located at the large tank.

The fuel quantity was determined by calibrating the nozzle and pump. Fuel from the nozzle was weighed for a known number of cycles, while discharging at atmospheric pressure, thus making unnecessary any correction for leakage of the system. Since the pressure of the air into which the fuel was injected during the engine tests did not exceed 6.25 lb./sq. in. gauge, the calibration obtained by testing at atmospheric pressure was substantially correct.

The engine power was measured by means of an electric cradle-type dynamometer, and magnetically operated stop watch and revolution counter. Temperatures of air, oil, and cooling water were maintained approximately constant. Ignition was timed to occur at 30° advance, two spark plugs being used during all tests. Engine compression pressures were determined with a balanced piston indicator while the engine was being driven by the dynamometer.

RESULTS OF TESTS

The test results are presented in the form of curves, Figures 8 to 12, inclusive, all of which are observed performance at sea level. The rate of air flow, compression pressure, and observed brake horsepower resulting from changes in the air supply pressure are shown in Figure 8.

The curves representing air flow in lb./hr. are linear for all but the higher air pressures at 1,300 revolutions per minute. The air flow was apparently affected very little by change of engine speed over the range investigated and was largely dependent on the air supply pressure. Unsuitable valve gear design was probably responsible for the shape of the curve at 1,300 revolutions per minute. The curves of compression pressures are also linear for the range investigated.

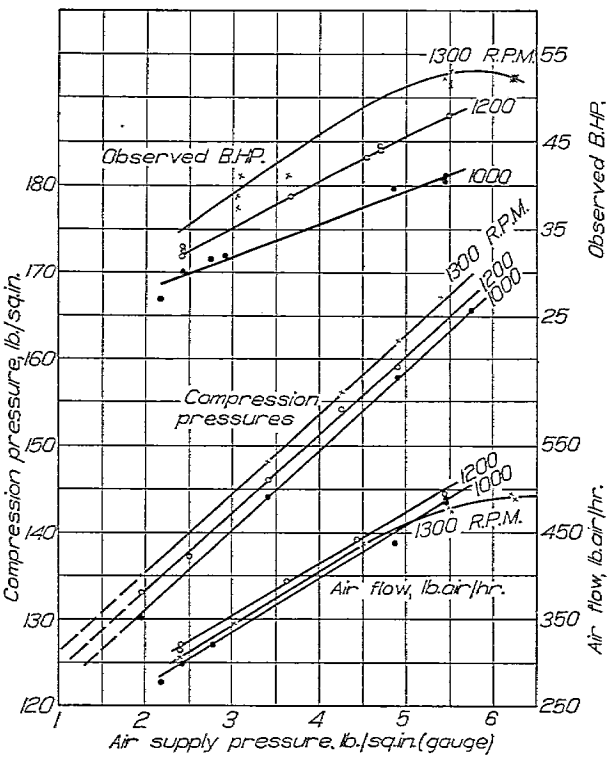

FIG. 8

It should be noted that it was possible to develop consistently 53 brake horsepower at 1,300 revolutions per minute with corresponding brake mean effective pressure of 116.5 lb./sq. in. This same engine when operated as a four-stroke cycle with a carbureter developed only 27.5 brake horsepower at this same speed. The curve for 1,300 revolutions per minute reaches a maximum at an air supply pressure of approximately 6 lb./sq. in., caused, presumably, by the decrease in air flow as indicated at this speed and pressure. Some brief tests were conducted with fuel injected directly into the cylinder, but the power output was much lower than when the fuel was injected into the entering air stream. As the primary object of making these tests was to determine the air requirements, no further attempt was made to develop direct-to-cylinder injection which might have possibilities equal to those of injection into the entering air.

It was found desirable, in order to reduce the tendency toward detonation, to use 8 cm^3 of ethyl fluid per gallon of domestic aviation gasoline. No pump trouble was experienced in using either gasoline alone or gasoline and ethyl fluid mixture. Even though the compression pressures varied over a wide range, the detonation remained fairly uniform in intensity during most of the runs. It was not thought severe enough to affect seriously the power output. Hot exhaust valves and reduction of the amount of residual exhaust gases (Reference 6), due to the scavenging air, both probably contributed to the tendency toward detonation. Experiments at the Bureau of Standards have shown that it is very difficult to scavenge a cylindrical chamber as completely by means of an air blast as by actually passing a piston throughout its

length.[1] However, in the case of an actual engine cylinder, where the clearance space is of necessity not traversed by the piston, it is possible with air scavenging alone to equal or even exceed the scavenging accomplished in the conventional four-stroke cycle engine. In the case of a four-stroke cycle engine, 100 per cent scavenging of the displaced volume is accomplished by the piston, but the clearance volume remains practically unscavenged. In the case of the two-stroke cycle, herein described, although the displaced volume is incompletely scavenged by the air blast it is also possible by the same means to scavenge partially the clearance space. Thus it is conceivable that one might obtain better scavenging with the two-stroke cycle engine, using air scavenging alone, than that possible with a four-stroke cycle engine of conventional design.

It was observed that when the engine was operated with suitable pump timing, rich mixtures, and air supply pressures of 3.5 to 4 lb./sq. in. regular operation would continue without electric ignition if the cooling water temperatures were high enough. This would indicate either that some part within the combustion chamber was hot enough to cause self-ignition or that continuous burning was taking place. It was questioned whether exhaust valves were hot enough to cause self-ignition in the brief time interval available at these engine speeds (Reference 7). With the intention of determining whether increase of the amount of scavenging air would influence this self-ignition tendency, the engine was operated at several scavenging air pressures and the water temperatures increased until uniform operation was obtained without electric ignition. With an air supply pressure of 3.5 to 4 lb./sq. in. satisfactory operation without electric ignition was obtained when the water temperatures reached 150° F. The engine then continued to run without missing until the water temperature was reduced to 90° F. When the air supply pressure was increased to 5 lb./sq. in. self-ignition could not be obtained even with very high jacket water temperatures. This indicated that the increased amount of cold scavenging air, preceding injection of fuel, either prevented ignition by residual flame or so reduced the temperature of the hot parts as to eliminate self-ignition. As the tendency toward detonation is known to be increased by the presence of hot regions in the cylinder (Reference 8), this influence of the excess amount of cold scavenging air on combustion chamber temperatures probably also partially accounts for the fact that detonation was fairly uniform for all load conditions. This may be explained by the facts that as the fuel and air charges and compression pressure were increased, which would normally be expected to increase the detonation, the exhaust valve and combustion chamber temperatures tended to decrease due to the increased flow of cold scavenging air, the net result being practically uniform detonation for the range of air pressures investigated.

The assumption that excess amounts of scavenging air flow past the exhaust valves at air supply pressures above 3.2 lb./sq. in. is borne out by an examination of Figure 9, which shows the effect of changes in air supply pressure on the specific air consumption. It can be seen that above this pressure there is a marked increase in specific air consumption, indicating loss of air with exhaust gases. As previously explained, two distinct series of tests were made, one with mixture quality giving maximum power and the other slightly leaned until approximately 1 per cent decrease in power was observed, the corresponding curves being given in Figure 9. The specific air consumption depends on the mixture quality but the minimum occurs at 1,300 revolutions per minute with a full rich mixture and an air supply pressure of approximately 3.4 lb./sq. in. The minimum specific air consumption at 1,300 revolutions per minute was found to be approximately 8.35 lb./B.HP./hr. and may be compared with a value of 7.15 lb./B.HP./hr. consumed by a four-stroke cycle single-cylinder test engine of equal displacement when operated under similar conditions.

Figure 10 shows the relation between specific air and fuel consumption and the brake horsepower. It is interesting that both the minimum air and fuel consumptions occur at approximately the same power output and that any increase in power results in a substantial increase in both air and fuel consumption. The specific fuel consumption at 1,300 revolutions per minute reaches a minimum of 0.55 lb./B.HP./hr. when approximately 40 brake horsepower

[1] So far as the authors know these experiments have not been published.

net is being developed or approximately 45 per cent more power than when operated on the four-stroke cycle. It is noteworthy, however, that the specific fuel consumption is increased

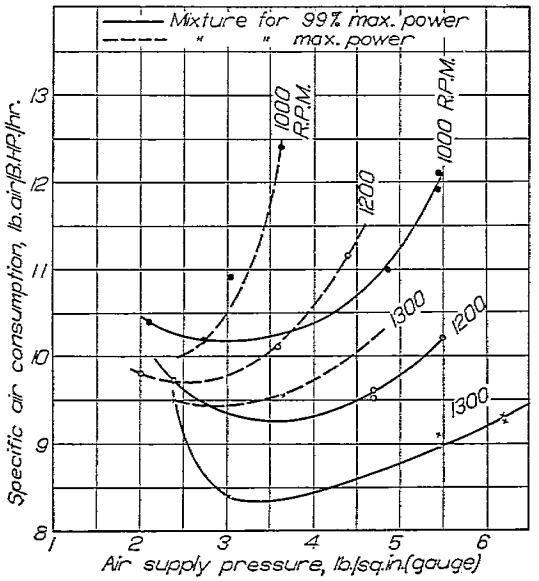

FIG. 9

by only approximately 12.5 per cent above its minimum value when the power output is increased to 50 brake horsepower net or approximately 82 per cent more power than that of the

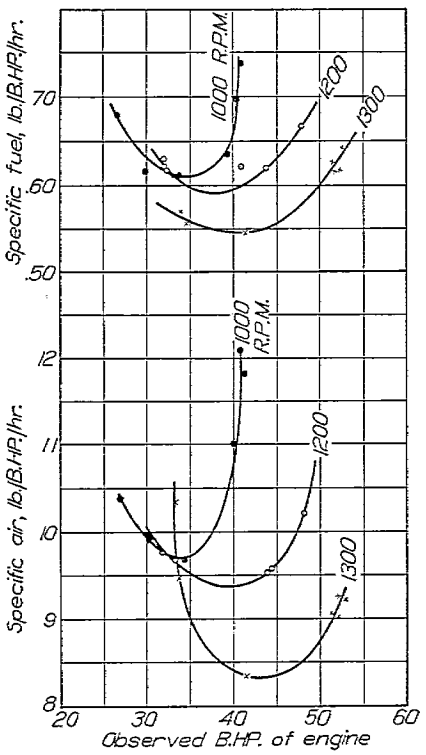

FIG. 10

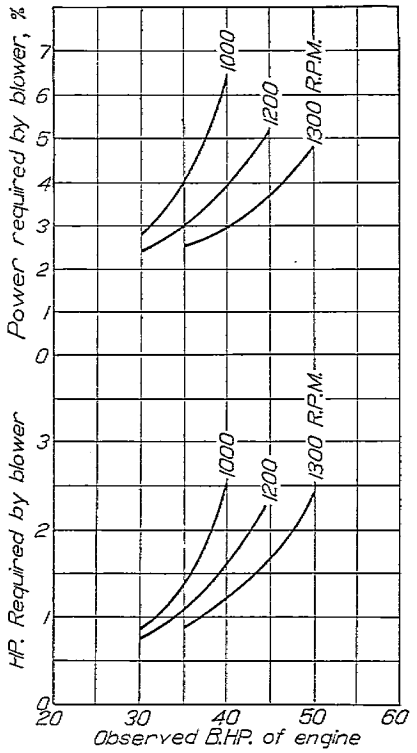

FIG. 11

corresponding four-stroke cycle engine. Estimated power required to supply the necessary scavenging air has been subtracted from the observed brake horsepower of the engine in arriving at the net values given above.

The high specific fuel consumption of 0.61 lb./B.HP./hr. at 1,300 revolutions per minute, corresponding to a power output of 50 brake horsepower net, is partly due to the high friction horsepower (6.9) of the single cylinder Liberty base on which the tests were performed. Assuming that a multiple cylinder two-stroke cycle engine would have approximately the same friction horsepower as a four-stroke cycle aircraft engine of the same displacement, the fuel consumption with the above operating conditions would be reduced from 0.61 to 0.57 lb./B.HP./hr. Applying a correspnding reduction to all of the fuel consumption values would serve to make them more nearly approach those obtained with current aircraft engines.

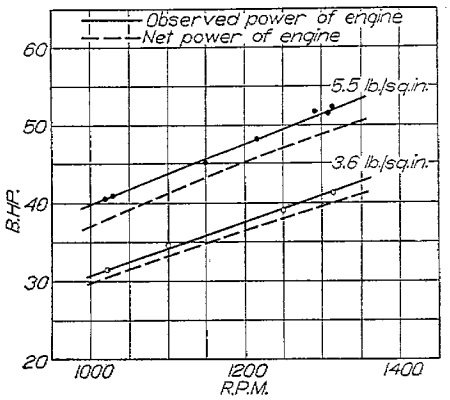

FIG. 12

Figure 11 shows the power required to suppy the air used by the engine when operating at speeds of 1,000, 1,200, and 1,300 revolutions per minute and delivering the power indicated. Power required by the blower is also shown in terms of percentage of the observed brake horsepower of the engine. These curves are based on the power requirements of the N. A. C. A. Roots type supercharger, a mechanical efficiency of 85 per cent being assumed. This efficiency is considered conservative as actual tests of the N. A. C. A. Roots supercharger have shown somewhat higher mechanical efficiencies than this assumed value. It will be readily appreciated that with suitable engine valve and port timing an oversize blower could be provided, thus serving to maintain the desired air pressure to a predetermined altitude.

Figure 12 shows both the observed and net power developed, plotted against revolutions per minute for air supply pressures of 3.6 and 5.5 lb./sq. in. gauge. These curves indicate that given suitable valve mechanism higher speeds than those investigated would be perfectly feasible.

CONCLUSIONS

The results of these tests, although incomplete, indicate that greatly increased power output, per unit of engine displacement, can be obtained with this two-stroke cycle engine, without the excessive fuel consumption usually associated with carbureted two-stroke cycle engines. A power output of 53 brake horsepower at 1,300 revolutions per minute or almost 85 per cent more than is developed in one cylinder of a standard Liberty 12 engine at the same speed, was consistently obtained with a 5 by 7 inch modified Liberty engine cylinder. Under these conditions specific air and fuel consumption of 9.0 and 0.61 lb./B.HP./hr. respectively, were obtained. Air was supplied, in the above case, for both scavenging and combustion at 5.5 pounds gauge pressure. The power required by a N. A. C. A. Roots type compressor of sufficient size to supply the necessary air, when the engine was operating at this power output, was estimated to be 3 horsepower. This figure might be reduced by using crankcase compression in conjunction with the compressor.

An engine of this type using airless injection, electric ignition, and blower scavenging and having the above performance characteristics, would seem to be worthy of consideration as a power plant for aeroplanes in which the primary engine requirement is the development of a large power output per unit of engine displacement, and fuel economy is relatively unimportant.

The engine did not give satisfactory operation at idling speeds, but no attempt was made to develop a design satisfactory in this respect as it was beyond the scope of this investigation.

The highest engine speed possible with the present design, using standard Liberty valves and valve gear, was 1,300 revolutions per minute, but it is felt that there would be no marked change in power, air or fuel consumption at somewhat higher speeds, as the trend of the curves show no decrease in power or increase in specific air or fuel consumption with increase in speed up to 1,300 revolutions per minute.

It is thought that suitable valves and valve mechanism would permit much higher engine speeds than were possible with the present engine, and that better results would be obtained by reversing the direction of gas flow through the cylinder so that the charge would enter through the valves and exhaust through the ports. This latter change would increase valve life, insure cool valves, which would materially reduce the tendency toward detonation, and should improve the operation at idling speeds. In the present design, a small idling charge can not reach the spark plugs without being so diluted as to prevent ignition or at least cause slow burning. Stratification of the combustible charge remote from the spark plugs, as would be the case in the present engine, would be detrimental, whereas, with the direction of gas flow reversed, a leading charge of scavenging air could be timed to precede the injection of fuel and thus leave a stratified charge of combustible mixture at the spark plugs.

REFERENCES AND BIBLIOGRAPHY

Reference 1. LIONEL S. MARKS: The Airplane Engine. p. 440.

2. MARSDEN WARE: Effect of the reversal of air flow upon the discharge coefficient of Durley orifices. N. A. C. A. Technical Note No. 40. 1921.

3. R. J. DURLEY: On the measurement of air flowing into the atmosphere through circular orifices in thin plates and under small differences of pressure. Transactions of American Society of Mechanical Engineers, 1906, vol. 27, p. 193.

4. F. H. NORTON: N. A. C. A. recording air speed meter. N. A. C. A. Technical Note No. 64. 1921.

5. JUDD and PHELEY: Effect of pulsations on flow of gases. Transactions of the American Society of Mechanical Engineers, 1922, vol. 44, p. 853.

6. J. F. ALCOCK: Inert diluents. Automobile Engineer, June, 1924. p. 165.

7. H. T. TIZARD: Self-ignition temperatures of fuels. The Automobile Engineer, May 1923, or Automotive Industries, June 24, 1923.

8. J. H. HOLLOWAY, H. A. HUEBOTTER, and G. A. YOUNG: Engine characteristics under high compression. Transactions of the Society of Automotive Engineers, 1923, vol. 18, Pt. I, p. 131.