NATIONAL ADVISORY COMMITTEE
FOR AERONAUTICS
MAILED
SEP 23 1927

SEP 30 1927

TO: Library L. M. A. L.

TECHNICAL NOTES

NATIONAL ADVISORY COMMITTEE FOR AERONAUTICS

No. 265

MEASUREMENT OF THE MOMENTS OF INERTIA OF FULL SCALE AIRPLANES

By M. W. Green
Langley Memorial Aeronautical Laboratory

FILE COPY
To be returned to
the files of the Langley
Memorial Aeronautical
Laboratory

FOR REFERENCE

NOT TO BE TAKEN FROM THIS ROOM

Washington
September, 1927

NATIONAL ADVISORY COMMITTEE FOR AERONAUTICS.

TECHNICAL NOTE NO. 265.

MEASUREMENT OF THE MOMENTS OF INERTIA OF FULL SCALE AIRPLANES.

By M. W. Green.

Summary

This paper contains a description of the method of measuring the moments of inertia of full scale airplanes as practiced by the National Advisory Committee for Aeronautics at the Langley Memorial Aeronautical Laboratory. The method, while not at all new, is published for the information and guidance of others who may desire to make similar measurements. The paper includes as an appendix the computations for the moments of inertia of the O-2 airplane.

Introduction

In the study of spinning flight, particularly uncontrollable spins, it has become increasingly evident that a knowledge of the precessional forces due to mass distribution of the airplane is very necessary. At present there is a conspicuous lack of information on the mass distribution of contemporary airplanes. With a view to obtaining authoritative data on this the National Advisory Committee for Aeronautics has established the practice of measuring the moments of inertia of all airplanes that pass through any flight tests at the laboratory. It is impossible

at Langley Field to do more than make a start on this collection of important information and it is hoped that this paper will stimulate the making of similar measurements by others.

Method

The three reference axes of the airplane are the usual datum axes about which the moments of inertia are desired. In the following the axis through the c.g. of the airplane parallel to the thrust axis is taken as the main reference axis, XX. The other two reference axes, YY and ZZ, are mutually perpendicular to the XX axis as shown in Figure 1.

The method employed consists essentially of swinging the airplane as a compound pendulum about an axis parallel to the axis for which the moment of inertia is desired. From the period and length of the pendulum, the radius of gyration is computed. From this, knowing the mass of the airplane, the moment of inertia can be determined. Because of the difficulty of suspending an airplane from an axis parallel to the ZZ axis, the moment of inertia about this axis is found by swinging the airplane as a torsional pendulum.

Determination of Center of Gravity Location:

The first requirement is to locate the center of gravity of the airplane. In all cases the airplane is assumed to be symmetrical about the XZ plane and the lateral position of the c.g.

is taken as the mid-span of the airplane. The longitudinal and vertical locations of the c.g. may be determined most easily either by weighing the airplane at two points of the longitudinal axis (usually at wheels and tail skid) at two different inclinations of the longitudinal axis or by the "plumb line" method. The former is the usual method employed on landplanes and is of so common application that it needs no further comment. The latter is of particular value with seaplanes when the pontoons or hull make the airplane difficult to support for weighing. It is accomplished by suspending the airplane from an axis parallel to the YY axis. In this position a plumb line is dropped from the axis of support and marked on the side of the fuselage. With the same suspension the inclination of the longitudinal axis of the airplane is changed and a second plumb line dropped and marked. The intersection of the two lines on the fuselage locates the longitudinal and vertical positions of the c.g. It was found that the plumb line could be established most conveniently by means of a transit set up perpendicular to the XZ plane in the vertical plane of the supporting axis at some distance from the airplane.

Determination of I_{XX}:

To determine the radius of gyration about the XX axis, the airplane is suspended from an axis parallel to the XX axis of the airplane (Figure 2). The airplane is given an initial oscillation in roll and the period of oscillation is measured by ob-

serving the time required for the airplane to make a number of oscillations, preferably not less than 25. The length of the pendulum is determined by measuring the distance from the supporting axis to the c.g. of the airplane. Knowing the period and pendulum length, the radius of gyration is obtained by the formula:

$$K = \sqrt{\frac{gh\,(60)^2}{4\,\pi^2\,n^2} - h^2} \qquad (1)$$

where g = acceleration of gravity = 32.2 ft./sec.^{2} 32.15

h = pendulum length in feet

n = number of complete oscillations per minute

K = radius of gyration in feet.

Simplified equation (1) becomes

$$K = \sqrt{\frac{2940\,h}{n^2} - h^2} \qquad (2)$$

The moment of inertia is given by the formula:

$$I = MK^2 \qquad (3)$$

where $M = \frac{W}{g}$ = mass of airplane in slugs $g = 32.15$

K = radius of gyration in feet

I = moment of inertia in slugs (feet)^2

Determination of I_{YY}:

To determine the radius of gyration about the YY axis, the airplane is suspended from an axis parallel to the YY axis of the airplane (Figs. 3, 4 and 5. The particular type of suspension illustrated is not necessary but is advisable since it serves for the I_{ZZ} determination without change). The pro-

cedure is identical with the I_{xx} determination except that the airplane is oscillated in pitch. The above formulas are used.

Determination of I_{zz}:

As was previously mentioned, it is not practicable to suspend the airplane as a compound pendulum about an axis parallel to the ZZ axis, so this moment of inertia is determined by swinging the airplane as a torsional pendulum about the ZZ axis. The suspension used is the same as that employed for the determination of I_{yy} and is shown in Figures 3, 4 and 5. In this case the airplane is given an initial oscillation in yaw and as before the period is determined by observing the time required to make a number of complete oscillations. With this suspension two distances must be measured, the lateral displacements of the supporting cables from the c.g. (a of Fig. 5) which must be equal, and the distance from the axis of support to the point of attachment, length of the bifilar (l of Fig. 5). Knowing these distances and the period, the radius of gyration is found from the formula:

$$K = \frac{30 \times a}{\pi\, n} \sqrt{\frac{g}{l}}$$

where g = acceleration of gravity = 32.2 ft./sec.^{2}

l = distance from axis of support to point of attachment in feet (length of bifilar)

a = lateral distance from c.g. to supporting cable in feet.

n = number of complete oscillations per minute.

K = radius of gyration in feet

As before, the moment of inertia is given by the formula:

$$I = MK^2$$

Principal Moments of Inertia:

For usual purposes it is sufficient to know the moments of inertia about the reference axes of the airplane. However, for some purposes, it is necessary to know the principal moments of inertia, or more particularly, the location of the three principal inertia axes with respect to the reference axes. These are determined by finding the ellipsoid of inertia of the airplane, whose three major axes are the principal inertia axes of the airplane. The moments of inertia about these axes are the principal moments of inertia of the airplane. In order to find the ellipsoid of inertia it is necessary to measure the moment of inertia about some other axis in the XZ plane in addition to I_{XX} and I_{ZZ} and to know the direction of this axis with respect to the XX or ZZ axis. The moment of inertia is measured in a similar manner to I_{XX} and the direction determined by measuring the inclination of the XX axis with the horizontal. In the following, this fourth moment of inertia will be called I_{XZ} and the principal axes will be called X'X', Y'Y', and Z'Z'.

The general equation for ellipsoid of inertia is

$$A \cos^2\alpha + B \cos^2\beta + C \cos^2\gamma - 2 D \cos\alpha \cos\beta - 2 E \cos\alpha \cos\gamma - 2 F \cos\beta \cos\gamma = I_{\alpha\beta\gamma} \qquad (1)$$

where α, β, γ are the angles that the axis about which the moment of inertia is $I_{\alpha\beta\gamma}$ makes with the reference axes XX, YY, and ZZ. A, B, and C are I_{xx}, I_{yy}, and I_{zz}, respectively. D, E, and F are products of inertia corresponding to the reference axes.

Since the airplane is symmetrical with respect to the XZ plane, it is known at once that the YY reference axis is one of the principal axes (Y'Y') and that the other two principal axes are in the XZ plane. Equation (1) then reduces to

$$A \cos^2\alpha + B \cos^2\beta + C \cos^2\gamma - 2 E \cos\alpha \cos\gamma = I_{\alpha\beta\gamma} \qquad (2)$$

A, B, C, $I_{\alpha\beta\gamma}$ (I_{xz}) and α, β, γ for $I_{\alpha\beta\gamma}$

have been previously determined. These are substituted in Equation (2) which is solved for E.

Knowing E, the direction of one of the principal axes may be found from the formula

$$\tan 2\Phi = \frac{2 E}{C - A}$$

where Φ is the angle that the principal X'X', axis makes with the XX axis.

The direction of the remaining principal axis Z'Z', is $\Phi + 90^\circ$.

The principal moments of inertia are found by substituting the directions of the principal axes into equation (2).

Figure 6 is a drawing of the ellipsoid of inertia of the

O-2 airplane. The computations for establishing this ellipsoid are in the attached appendix.

Discussion

There are a number of points in connection with the actual swinging of the airplane that require considerable attention in order to obtain accurate data. It is obvious that the distances h, l, and a must be measured very accurately and it has been found advisable to make at least two independent sets of measurements to establish each distance. It is also fairly obvious that the weight of the suspension apparatus should be kept as small as possible. Where suspension hooks are already on the airplane, as in the case illustrated, the weight can be kept small and no correction is necessary. However, in many cases it is necessary to use a sling around the airplane for attachment purposes, in which case it may be necessary to correct the moments of inertia for the additional inertia of the sling and suspension. This is accomplished most easily by swinging some other body of known moment of inertia in the same sling used for the airplane.

The pivots effect the accuracy of the measurements considerably and a knife-edge pivot or ball bearings is recommended. The mounting for the pivots, the superstructure, should be rigid enough to prevent movement when the airplane is oscillated.

The oscillations of the airplane should be of small magnitude to eliminate as much as possible the damping effects of the

airplane. Experience indicates that when the amplitude of oscillation is less than 10° the damping can be disregarded. In some instances a secondary oscillation of the airplane is induced by the original oscillation and it was found that the moments of inertia measured in these instances were erroneous. These secondary oscillations were eliminated by exercising due care in starting the original oscillation or, where they still persisted, by changing the length of the suspension slightly.

It is obvious that for an accurate determination of c.g. location the angular displacement between the two positions of the XX axis should be as large as possible. Also, when principal moments of inertia are desired, the axis for measuring I_{xz} should be inclined as nearly to 45° from the XX axis as is possible.

Appendix

Computations - Moments of Inertia of O-2 Airplane

I_{xx}

Number of oscillations	=	100
Time	=	7.532 min. T= 4,52 sec
n	=	13.276
h	=	14.22 ft.
Weight	=	4676.00 lb.

$$M = \frac{W}{g} = \frac{4676}{32.2} = 145.217 \text{ slugs}$$

$$K_x = \sqrt{\frac{2940 \times 14.22}{(13.276)^2} - (14.22)^2} = 5.916 \text{ ft.}$$

$$I_{xx} = MK^2 = 145.217 \times \left[\frac{2940 \times 14.22}{(13.276)^2} - (14.22)^2\right]$$

$$= 5081.2 \text{ slugs (feet)}^2$$

I_{yy}

Number of oscillations	=	175
Time	=	13.128 min.
n	=	13.330
h	=	14.22 ft.

$$K_y = \sqrt{\frac{2940 \times 14.22}{(13.330)^2} - (14.22)^2} = 5.751 \text{ ft.}$$

$$I_{yy} = MK^2 = 145.217 \times \left[\frac{2940 \times 14.22}{(13.330)^2} - (14.22)^2\right]$$

$$= 4802.7 \text{ slugs (feet)}^2$$

I_{zz} Number of oscillations = 125

Time = 9.624 min.

n = 12.988

$T = 4.63$

l = 5.0625 ft.

a = 4.0209 " $A = 8.04$

$$K_z = \frac{30 \times 4.0209}{\pi \times 12.988} \sqrt{\frac{32.2}{5.0625}} = 7.456 \text{ "}$$

different suspension

$$I_{zz} = MK^2 = \underline{145.217} \times \left[\left(\frac{30 \times 4.0209}{\pi \times 12.988}\right)^2 \times \frac{32.2}{5.0625}\right]$$

$$= \underline{\underline{8072.4 \text{ slugs (feet)}^2}}$$

I_{xz} Tail down 7.75°

Number of oscillations = 100

Time = 7.593 min.

n = 13.170

h = 14.336 ft.

$$K_{xz} = \sqrt{\frac{2940 \times 14.336}{(13.17)^2} - (14.336)^2} = 6.122 \text{ ft.}$$

$$I_{xz} = MK^2 = 145.217 \times \left[\frac{2940 \times 14.336}{(13.17)^2} - (14.336)^2\right]$$

$$= \underline{\underline{5442.4 \text{ slugs (feet)}^2}}$$

Equation of Ellipsoid of Inertia

$$A \cos^2\alpha + B \cos^2\beta + C \cos^2\gamma - 2 E \cos\alpha \cos\gamma = I_{xz}$$

$$A = I_{xx} = 5081.2$$

$$B = I_{yy} = 4802.7$$

$$C = I_{zz} = 8072.4$$

$$I_{xz} = 5442.4$$

$$\alpha = 7.75^\circ \qquad \cos\alpha = .99085$$

$$\beta = 90^\circ \qquad \cos\beta = 0$$

$$\gamma = 90^\circ - 7.75^\circ = 82.25^\circ \qquad \cos\gamma = .13485$$

Subst.

$$5081.2 \times (.99085)^2 + 4802.7 \times 0 + 8072.4 \times (.13485)^2$$

$$- 2 E \times .99085 \times .13485 = 5442.4$$

$$- 2 E = \frac{5442.399 - 4988.669 - 146.793}{.133616}$$

$$- 2 E = + 3297.2$$

$$E = - 1148.6$$

Then the equation is:

$$A \cos^2\alpha + B \underline{\underline{\cos^2\beta + C \cos^2\gamma + 3297.2}} \cos\alpha \cos\gamma = I_{\alpha\beta\gamma}$$

Direction of Principal Axes

x'x'

$$\tan 2\Phi = \frac{2E}{C - A}$$

$$= \frac{-2297.2}{8072.4 - 5081.2}$$

$$= -.7697$$

$$2\Phi = -37.524^\circ$$

$$\Phi = -18.762^\circ \quad \alpha$$

z'z'

$$\psi = 90^\circ - 18.762^\circ$$

$$= 71.238^\circ \quad \gamma$$

Principal Moments of Inertia

$I_{x'x'}$

$\alpha = 18.762^\circ$; $\cos\alpha = .9468$

$\beta = 90^\circ$; $\cos\beta = 0$

$\gamma = 71.238^\circ$; $\cos\gamma = .3217$

$$I_{x'x'} = A \cos^2\alpha + C \cos^2\gamma + 2297.2 \cos\alpha \cos\gamma$$

$$= 5081.2\ (.9468)^2 + 8072.4\ (.3217)^2 + 2297.2 \times .9468 \times .3217$$

$$= 4690.7 \text{ slugs (feet)}^2$$

$I_{z'z'}$

$\alpha = 71.238^\circ$; $\cos\alpha = .3217$

$\beta = 90^\circ$; $\cos\beta = 0$

$\gamma = 18.672^\circ$; $\cos\gamma = .9468$

$$I_{z'z'} = 5081.2\ (.3217)^2 + 8072.4\ (.9468)^2 + 2297.2 \times .3217 \times .9468$$

$$= 8461.9 \text{ slugs (feet)}^2$$

$I_{y'y'}$

$$I_{y'y'} = I_{yy} = 4802.7 \text{ slugs (feet)}^2$$

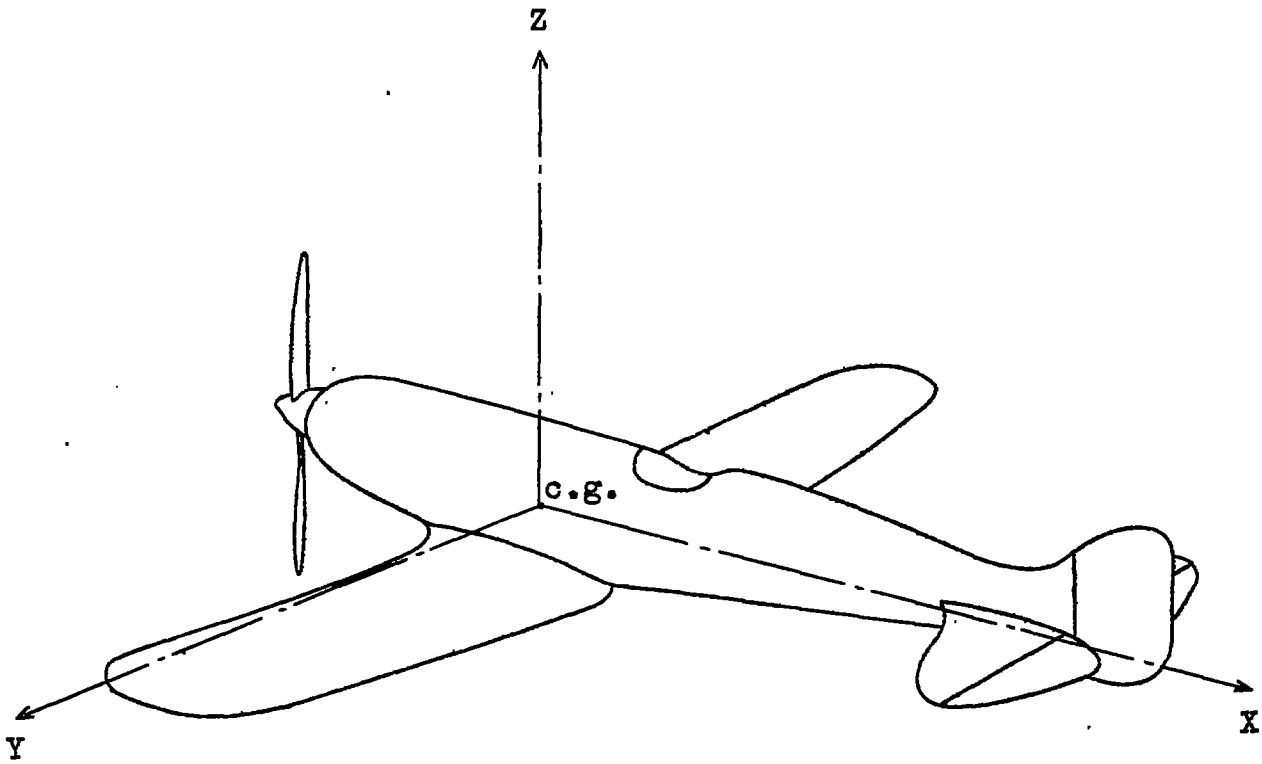

Fig.1

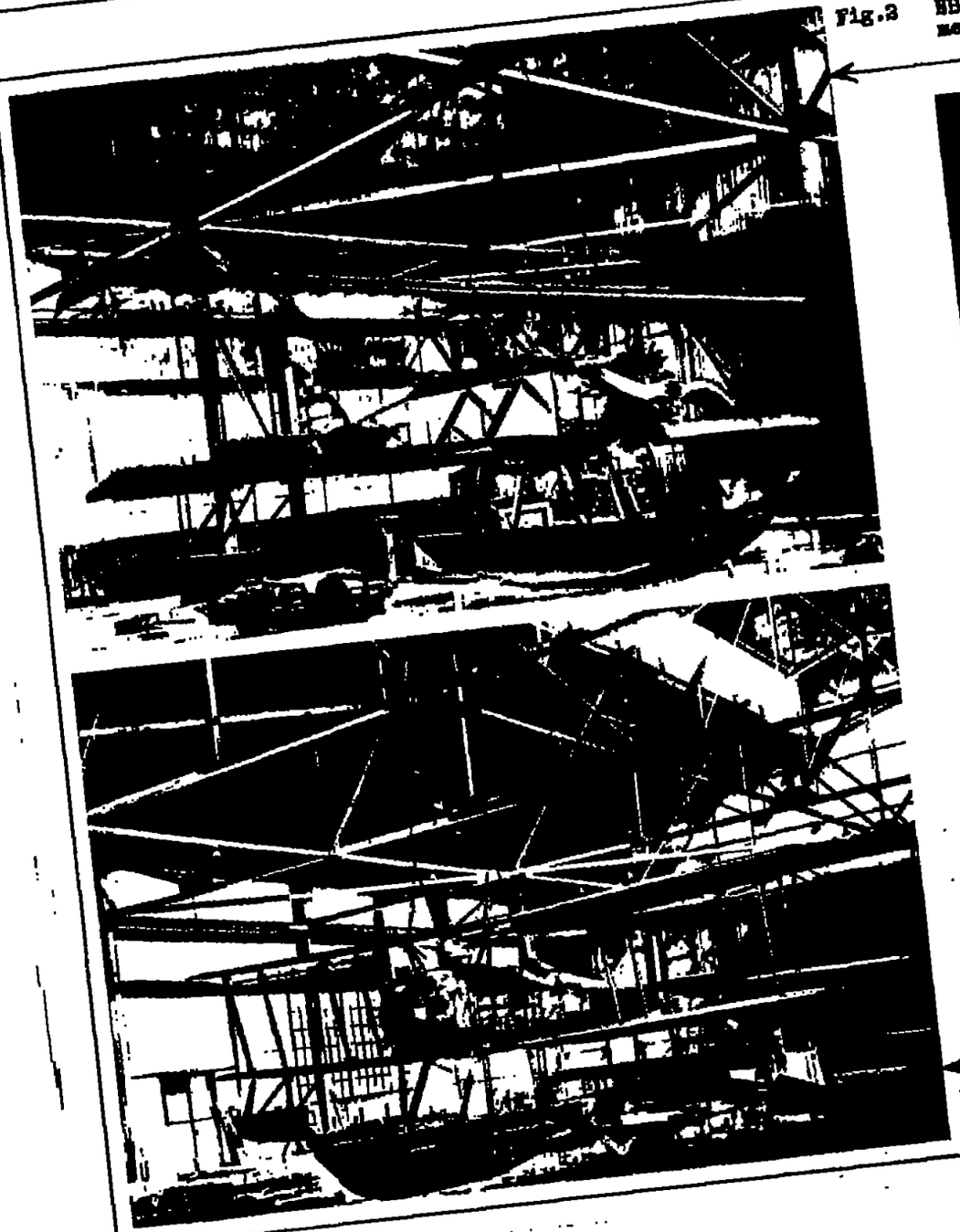

Fig.2 NB-1 Seaplane suspended for measurement of I_{xx}

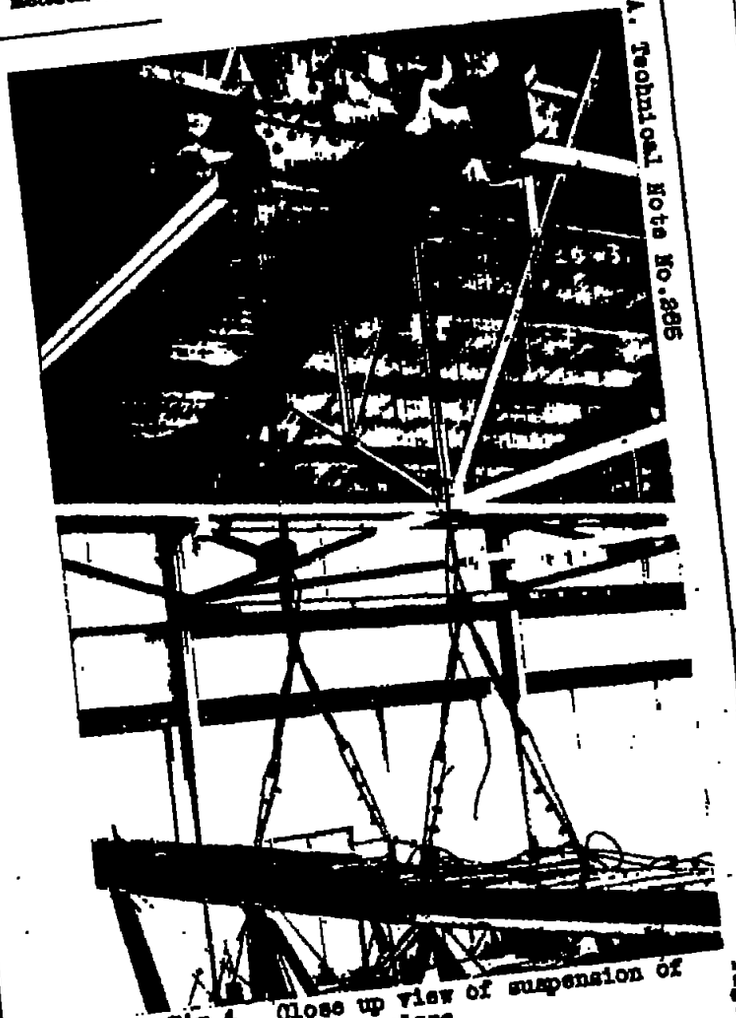

Fig.4 Close up view of suspension of UO-1 seaplane

Fig.3 UO-1 Seaplane suspended for measurement of I_{yy} and I_{zz}.

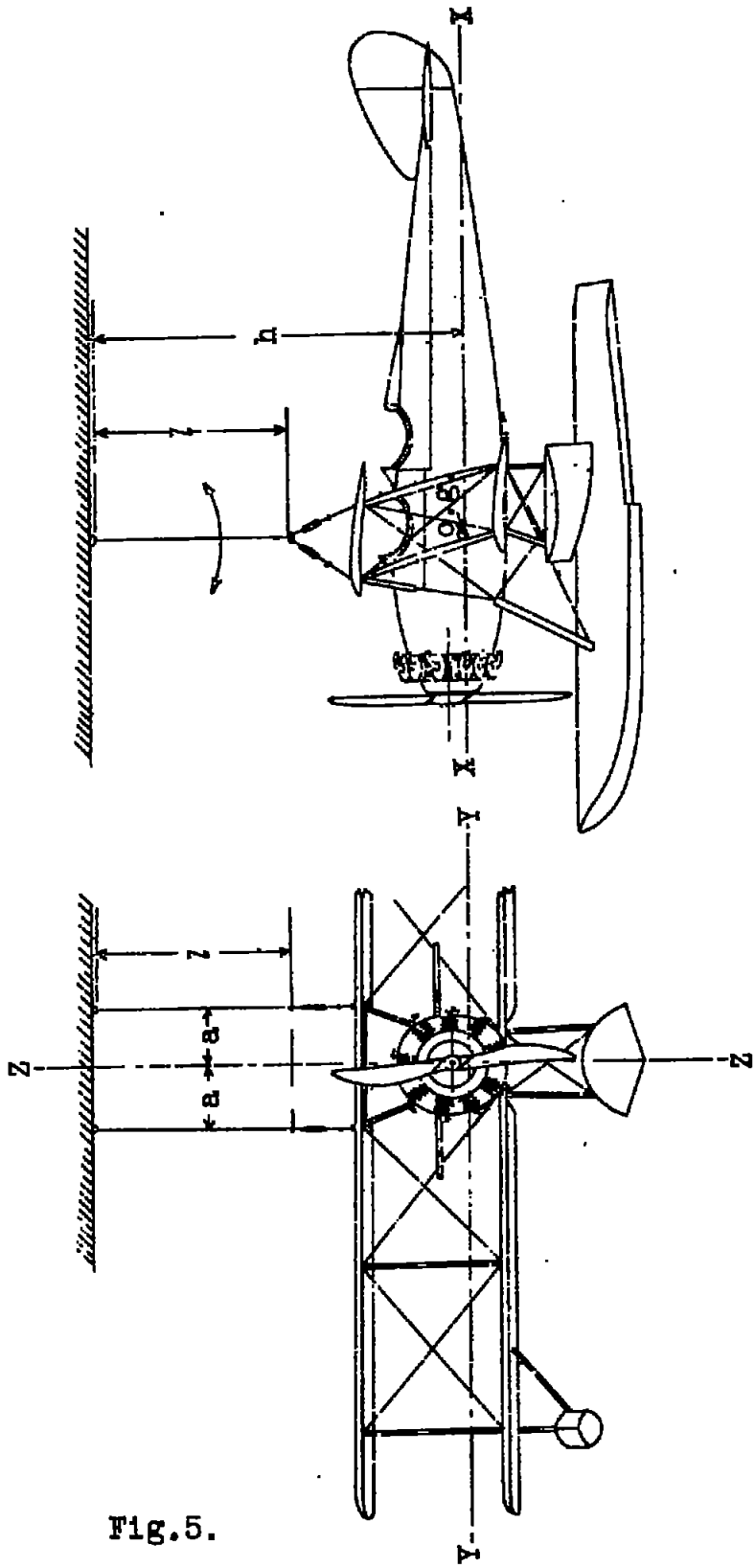

Fig.5.

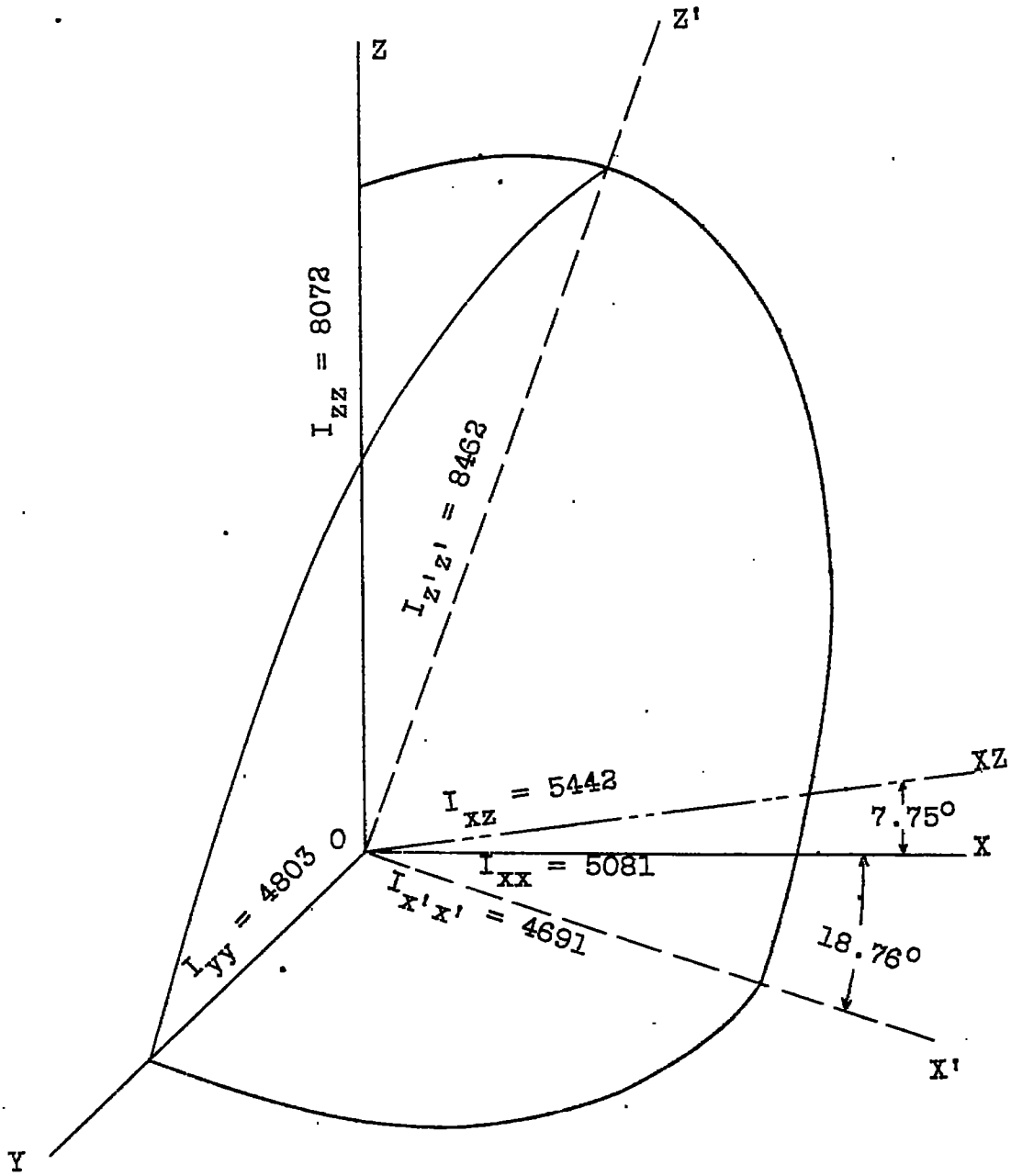

Fig.6 Ellipsoid of inertia for O-2 airplane.