MAR 23 1928

MAILED
MAR 20 1928

TO: Library L. M. A. L.

TECHNICAL NOTES

NATIONAL ADVISORY COMMITTEE FOR AERONAUTICS

No. 280

DRAG OF EXPOSED FITTINGS AND SURFACE IRREGULARITIES ON AIRPLANE FUSELAGES

By Donald H. Wood
Langley Memorial Aeronautical Laboratory

FILE COPY
To be returned to
the files of the Langley
Memorial Aeronautical
Laboratory

Washington
March, 1928

NASA Technical Library
3 1176 01433 5369

NATIONAL ADVISORY COMMITTEE FOR AERONAUTICS.

TECHNICAL NOTE NO. 280.

DRAG OF EXPOSED FITTINGS AND SURFACE IRREGULARITIES ON AIRPLANE FUSELAGES.

By Donald H. Wood.

Summary

Measurements of drag were made on fittings taken from a typical fuselage to determine whether the difference between the observed full size fuselage drag and model fuselage drag could be attributed to the effects of fittings and surface irregularities found on the full size fuselage and not on the model.

There are wide variations in the drag coefficients for the different fittings. In general those which protrude little from the surface or are well streamlined show very low and almost negligible drag. The measurements show, however, that a large part of the difference between model and full scale test results may be attributed to these fittings.

Introduction

The drag of airplane fuselages is usually found from tests on carefully polished models without surface irregularities or, at most, with idealized outlines of the engine, cockpit, and

pilot's head. It is evident to the most casual observer that actual airplane fuselages are dotted with cowl fittings, step plates, wire and strut fittings, screw heads and bolts which, in the aggregate, cover a not inconsiderable portion of the surface. Inasmuch as the drag of a streamline body is largely due to the friction of the air on the surface, one may surmise that a considerable discrepancy may exist between smooth model drag and actual rough airplane fuselage drag. This discrepancy is often overlooked because the increase in drag due to the surface irregularities present on the airplane but usually omitted from models, is about equal to the decrease in drag due to the increased scale of the airplane over that of the model. With a view to determining whether this difference of drag could be attributed to the protruding fittings and surface irregularities of the full size fuselage, and also to throw light on the magnitude and distribution of these drag effects, tests were made on small parts. Some were taken from a "Messenger" fuselage, and others were duplicates of parts found there. These tests were made in the six-inch, open-throat wind tunnel of the National Advisory Committee for Aeronautics, at Langley Field, Virginia.

Apparatus

1. The Six-Inch Wind Tunnel:

The six-inch, open-throat wind tunnel, which was used for these tests, is shown in Figures 1 and 2, and described in Reference 1. The balance shown diagrammatically in Figure 1 consists

of a floor plate (A) suspended from a fixed frame by small wires (B). The drag is taken by a horizontal wire (C) running forward to a ring (D). From the ring a wire (E) runs downward at an angle of 45° to a fixed support and a vertical wire (F) is carried up to the beam of an ordinary chemical balance (S) on the top of the tunnel. The balance is sensitive to about 1/2 gram.

2. Mounting Surface:

In order to simulate the surface of a fuselage on which the fittings are normally found, a flat plate (G) 9 inches by 16 inches by 3/32 inch with rounded leading edge (16 inches long) and sharpened trailing edge was prepared. This was mounted at the center of the air stream with its leading edge 1 inch back of the edge of the entrance cone. This plate was supported by four struts (H) from the balance floor well outside the air stream. The struts were slotted and held in place with thumb screws. By adjusting the leading edge up or down the flat plate was fixed parallel to the air stream as determined by the minimum drag reading on the balance. All parts tested were mounted near the center on this plate. They were held together and to the plate with small screws and balsam cement.

3. Test Pieces:

The fittings tested are shown in Figures 3, 4 and 5. Some were removed from the fuselage itself. Others were measured and duplicates were made of aluminum. Four flat plates of different

thickness and a thin plate with four kinds of screws and washers protruding, while not found on the airplane, were tested to determine the nature of the resistance of this type of protuberance. Some fittings, it will be noted, are combinations of others so that the effect of adding to a fitting may be determined.

Tests

All tests were conducted at air speeds of 50, 75, and 100 miles per hour. The drag of the mounting was first measured alone at these three speeds. The drag was then measured with fittings in place on the plate. Check zeros were made from time to time. No difficulty was experienced in securing the desired speed as a steady and smooth flow had been well established and the manometer calibrated in previous tests.

Results

By subtracting the drag of the mounting plate from that of the fitting and mounting plate together, the drag of the fitting in the presence of the plate was obtained. The results indicated that the drag depended in an irregular manner, not only on the projected area but on the surface area and relation of the parts. For this reason no attempt was made to reduce the data to square feet of projected area or surface.

All data was reduced to the coefficient D/q

where D = net drag in pounds

q = dynamic pressure = $\frac{1}{2} \rho V^2$

ρ = mass density of the air

V = velocity in feet per second.

Values of net drag and D/q are given in Table I. From this data the drag of any fitting at any speed may be found by multiplying the coefficient by the dynamic pressure corresponding to that speed. For cowl fastening No. 5 and moulding strip No. 13 coefficients have been computed for 1 ft. length. The drag of each fitting in pounds at 100 miles per hour has been given in Figures 3, 4, and 5 as an aid to designers.

By counting the number of fittings of each type, multiplying by the drag of one fitting and summing up these values, the total drag of all fittings for the "Messenger" fuselage was found to be 4.88 lb. at 75 miles per hour. This is 34.8 per cent of the drag of the bare closed-in fuselage. This percentage is computed from test results given in Reference 2.

Analysis of Results

The thin plates and parts with a small dimension perpendicular to the mounting surface show a negligibly small drag. When, however, bolts or screws with heads protruding are used to mount them a comparatively large drag results due to the disturbance caused in the rear of the bolt heads and to the increase in veloc-

ity as distance from the plate is increased. As the thickness increases and more of the fitting protrudes above the surface, an eddy builds up around the edge and its influence is felt on surfaces to the rear. (This condition obtains for Wing Fitting No. 9, for example.) Such parts as must protrude should be well streamlined. For example, the low drag of the step plate No. 11 may be noted. No account is here taken of the curvature of the surface of the fuselage or of the position of fittings on it. It is probable that one part will blanket another and that the velocity will vary over different parts of the fuselage,

The change in value of D/q with velocity shows the existence of a scale effect. D/q does not always decrease with increasing speed, although it does for the well streamlined shapes.

No definite rule for finding the drag of fittings can be given as there are wide variations for different shapes. There is, however, enough variety to enable one to select a coefficient approximating closely the true coefficient for any particular fitting.

Conclusions

The drag of plates and fittings close to a fuselage surface is small, but increases rapidly as the fitting projects farther from the surface. Efforts should be made to keep all fittings close to the surface and to streamline those which must project.

Although laudable attempts have been made to eliminate surface irregularities and exposed fittings on modern airplanes, fur-

ther tests should be made to determine the drag of fittings still used. These should be made with large or full scale fuselages so that parts can be more easily duplicated and the drag determined with them placed in their proper positions. The results of the present test, however, indicate the general nature of the effects.

Langley Field, Va.,

December 19, 1927.

References and Bibliography

Ref. 1. Hemke, Paul E. : Influence of the Orifice on Measured Pressures. N.A.C.A. Technical Note No. 250. (1926)

Ref. 2. Weick, Fred E. : Full Scale Drag Tests on Various Parts of Sperry Messenger Airplane. N.A.C.A. Technical Note No. 271. (1927)

Wieselsberger, C. : Air Resistance of Actual Airplane Parts. N.A.C.A. Technical Note No. 169. (1923)

Bradfield, F. B. : Scale Effect on Struts and Drag of Wiring Plates of a Bristol Fighter. Correction of Model Tests for Comparison with Full Scale. British Aeronautical Research Committee Reports and Memoranda No. 890. (1923)

TABLE I.

Part No. and Test No.	Remarks	50 M.P.H. 73.4 ft./sec.		75 M.P.H. 110 ft./sec.		100 M.P.H. 146.7 ft./sec.	
		Net drag grams	D/q	Net drag grams	D/q	Net drag grams	D/q
1.	Short side parallel to the air stream	18	.00621	37.5	.00575	63.5	.00547
2.	Short side parallel to the air stream	12	.00414	24.5	.00375	45.5	.00392
3.	Short side parallel to the air stream	7	.00241	12.5	.00191	24.5	.00211
4.	Short side parallel to the air stream	2	.000690	3.5	.00054	7.5	.00065
1.	Long side parallel to the air stream	8	.00276	15.5	.00238	29.5	.00254
2.	Long side parallel to the air stream	5	.00172	11.5	.00176	19.5	.00168
3.	Long side parallel to the air stream	3	.00103	5.5	.00084	13.5	.00116
4.	Long side parallel to the air stream	-1	-.00034	1.5	.00023	.5	.00043
5.	Short side parallel to the air stream	8	.00276	16.5	.00253	32.5	.00280
5-A	Long side parallel to the air stream	2	.00069	3.5	.00054	4.5	.00039
5-B	Long side parallel to air stream with rod up	3	.00103	3.5	.00054	7.5	.00065
6.	Flat plate	-1	-.00034	.5	.00008	.5	.00004
6-A	No.6 with lug added	3	.00103	2.5	.00038	6.5	.00056
6-B	No.6 with hex. nuts added	2	.00069	4.5	.00069	9.5	.00082
6-C	No.6 with lug and one nut	3.5	.00121	8.5	.00130	17.5	.00151

TABLE I (Cont.)

Part No. and Test No.	Remarks	50 M.P.H. 73.4 ft./sec.		75 M.P.H. 110 ft./sec.		100 M.P.H. 146.7 ft./sec.	
		Net drag grams	D/q	Net drag grams	D/q	Net drag grams	D/q
6-D	No. 6 turned 90°	1	.00034	2.5	.00038	3.5	.00030
6-E	No. 6-D with hex. nuts	3	.00103	5.5	.00084	9.5	.00082
6-F	No. 6-D with lug	2	.00069	2.5	.00038	7.5	.00065
7.	2 lugs 1 dia. apart	3	.00103	4.5	.00069	10.5	.00091
8.	Flat plate	0		.5	.00007	1.5	.00013
8-A	No.8 with lug & hex. nuts added	4	.00138	9.5	.00145	16.5	.00142
9	Wing root fitting	25	.00862	57.5	.00881	102.5	.00883
10	Short side parallel to the air stream	10	.00345	19.5	.00299	40.5	.00349
10-A	Long side parallel to the air stream	9	.00310	17.5	.00268	37.5	.00323
11.	Step plate	5	.00172	10.5	.00161	18.5	.00159
12.	Gear cover 45° open side to the front	115	.0396	232.5	.0356	387.5*	.0366*
12-A	12-A 45° closed side to the front	75	.0207	129.5	.0198	217.5	.0187
13-A	Moulding strip with round head screws	3	.00103	5.5	.00084	9.5	.00082
13-B	13 with hex. head nuts	5	.00172	9.5	.00145	15.5	.00133
14.	Plate with trailing edge raised, gap left open	5	.00172	10.5	.00161	12.5	.00108
15.	No.1 with 3-#8 round head machine screws & 2 washers	3	.00103	6.5	.00100	15.5	.00133

*At 95.5 M.P.H.

TABLE I (Cont.

Part No. and Test No.	Remarks	50 M.P.H. 73.4 ft./sec.		75 M.P.H. 110 ft./sec.		100 M.P.H. 146.7 ft./sec.	
		Net drag grams	D/q	Net drag grams	D/q	Net drag grams	D/q
16.	No.1 with 3-#10 round-head machine screws & 2 washers	7	.00241	9.5	.00145	17.5	.00151
17.	No.1 with 3-#12 round-head machine screws & 2 washers	8	.00276	12.5	.00191	19.5	.00168
18.	No.1 with 3-#10 machine screws protruding above hex. nut & washer	10	.00345	19.5	.00299	32.5	.00280
19.	No.1 with 3 hex. nuts	6	.00207	11.5	.00176	20.5	.00177
13-a	Drag for 1 foot length	9	.00309	16.5	.00253	28.5	.00245
13-b	Drag for 1 foot length	15	.00516	28.5	.00435	46.5	.00399
5.	Drag for 1 foot length		.00736		.00675		.00747
5-A	Drag for 1 foot length		.00184		.00144		.00104
5-B	Drag for 1 foot length		.00275		.00144		.00173
	Mounting plate	15		32.5		52.5	

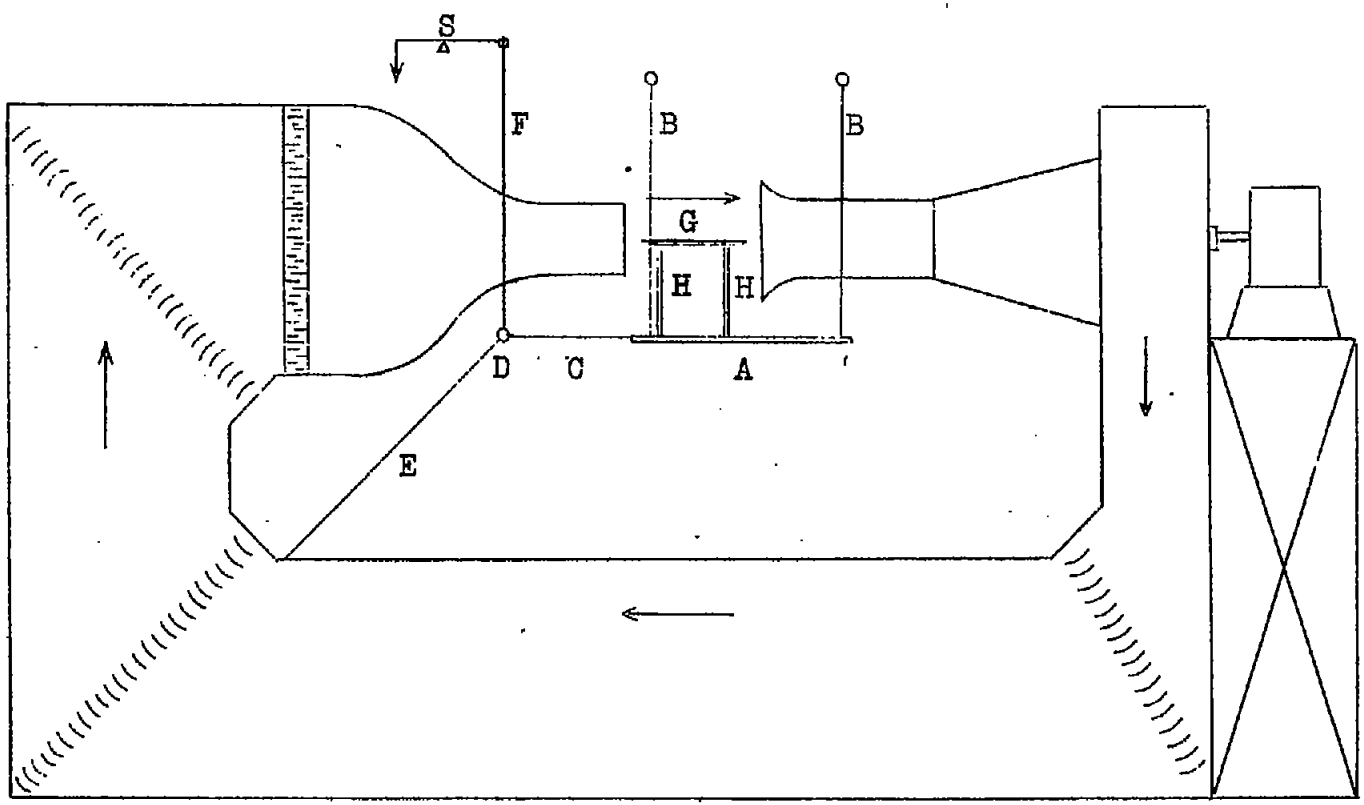

Fig.1 Sketch of N.A.C.A. six inch wind tunnel balance and mounting plate.

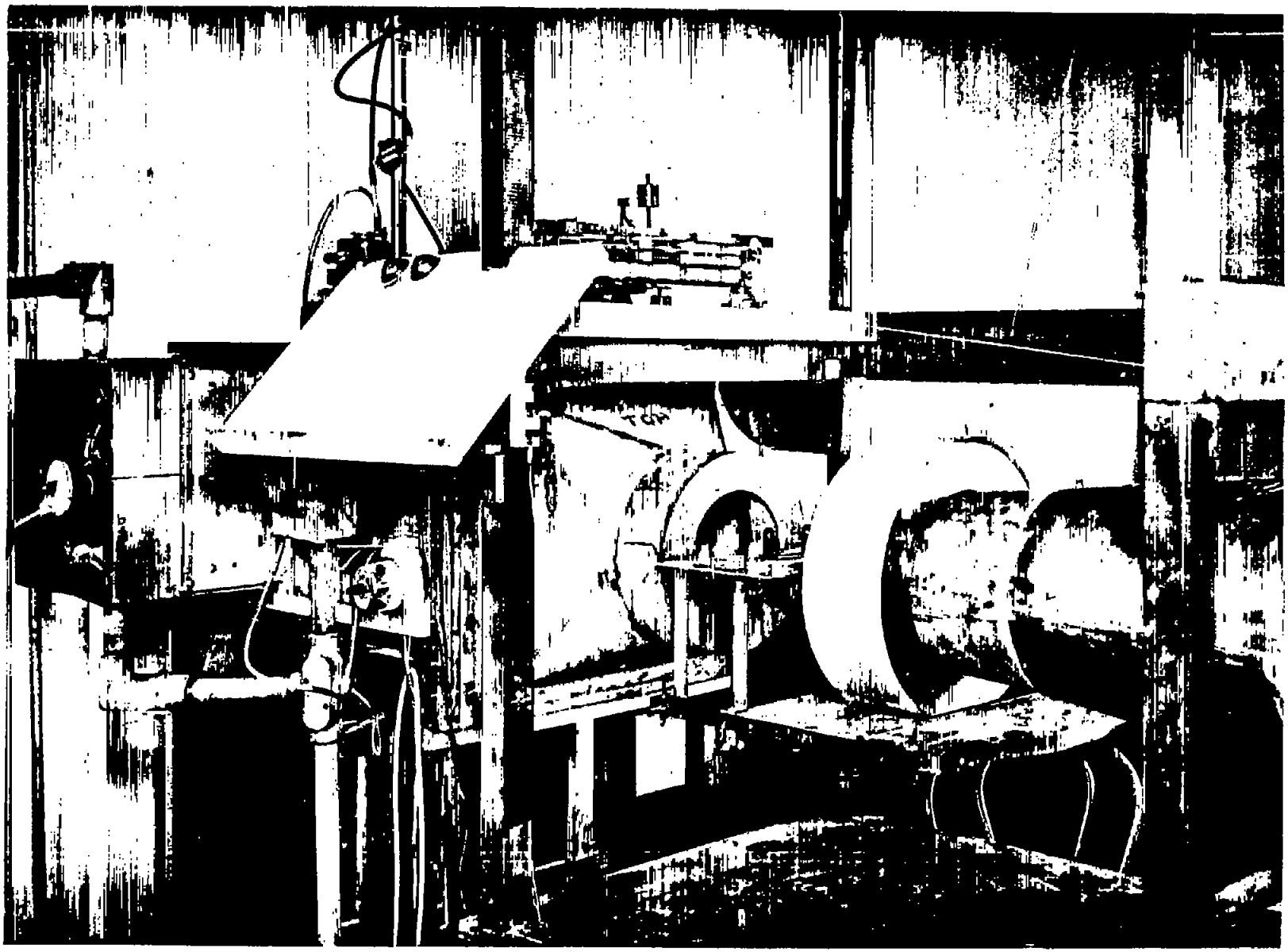

Fig. 2. N.A.C.A. six inch wind tunnel.

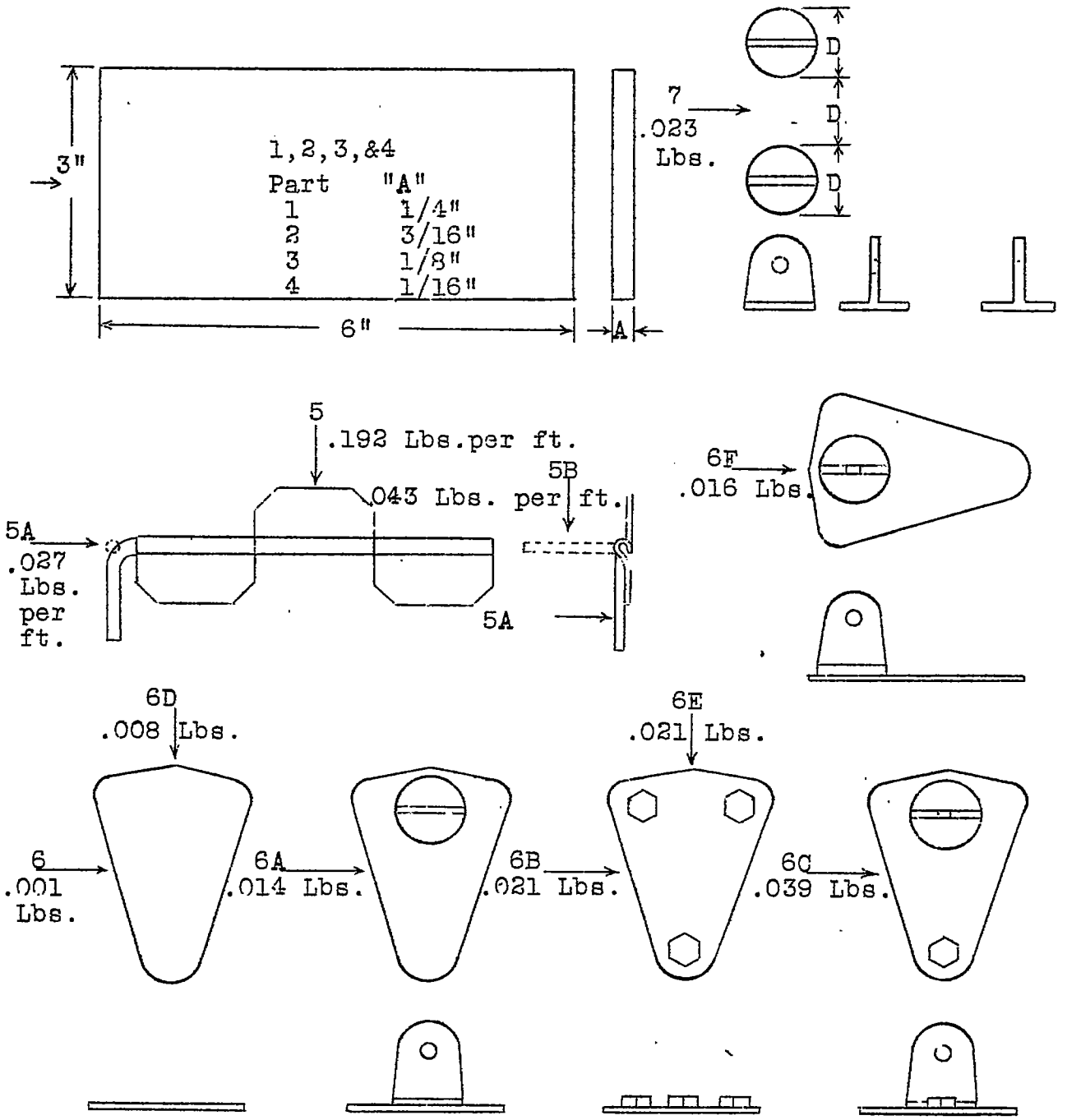

Scale — 0 1/2" 1" 2"

Numbers near arrows are pounds drag at 100 M.P.H. Arrows show air direction.

Fig.3

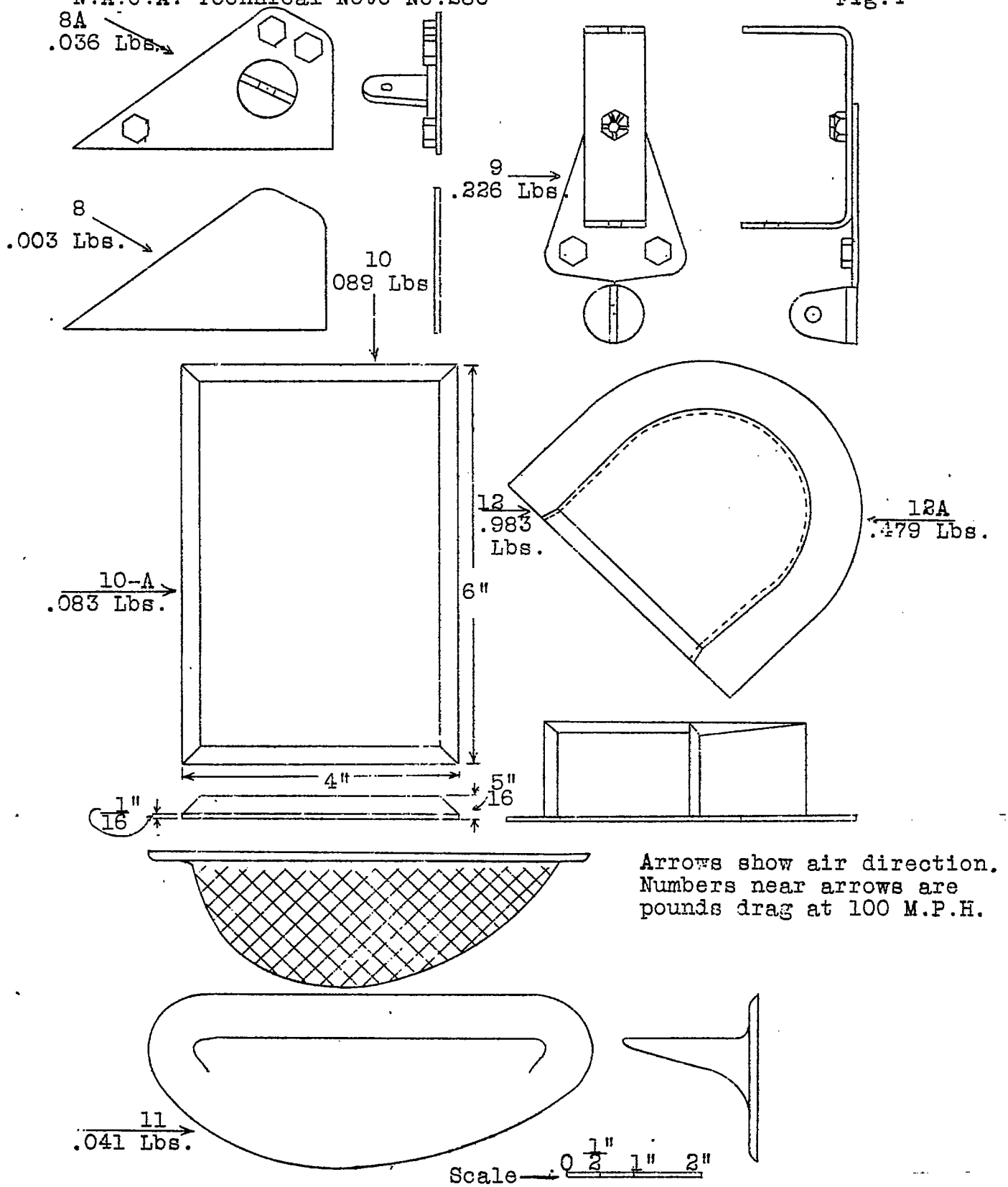
8A
.036 Lbs.
8
.003 Lbs.
10
089 Lbs
9
.226 Lbs.
12
.983
Lbs.
12A
.479 Lbs.
10-A
.083 Lbs.
6"
4"
5"
16
1"
16
Arrows show air direction.
Numbers near arrows are
pounds drag at 100 M.P.H.
11
.041 Lbs.
Scale
0
1"
2
1"
2"

Fig.4

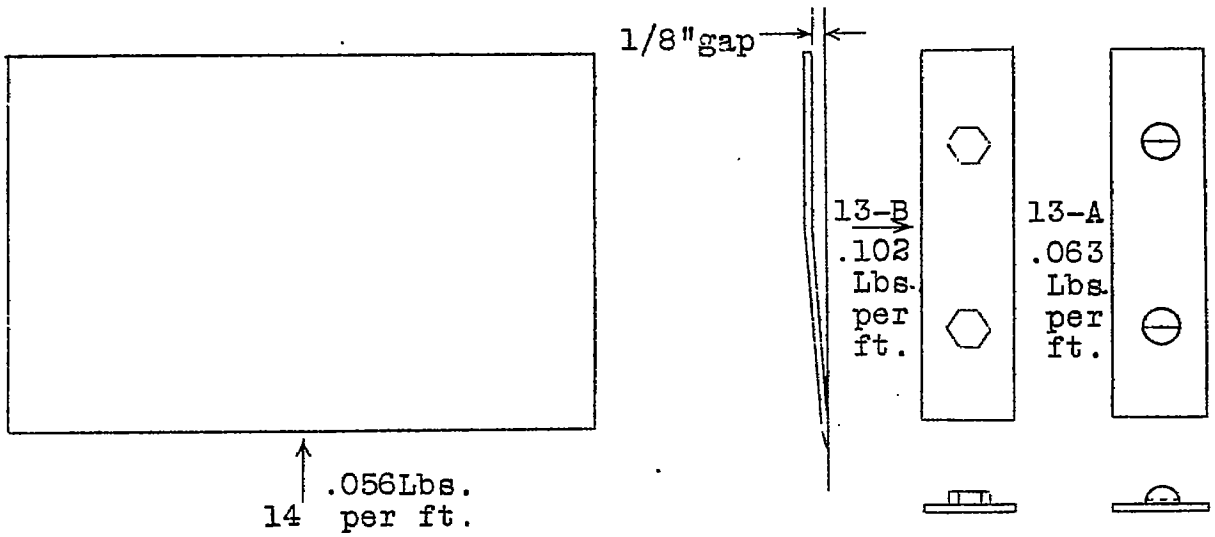

Numbers near arrows are pounds drag at 100 M.P.H.
Arrows show air direction.

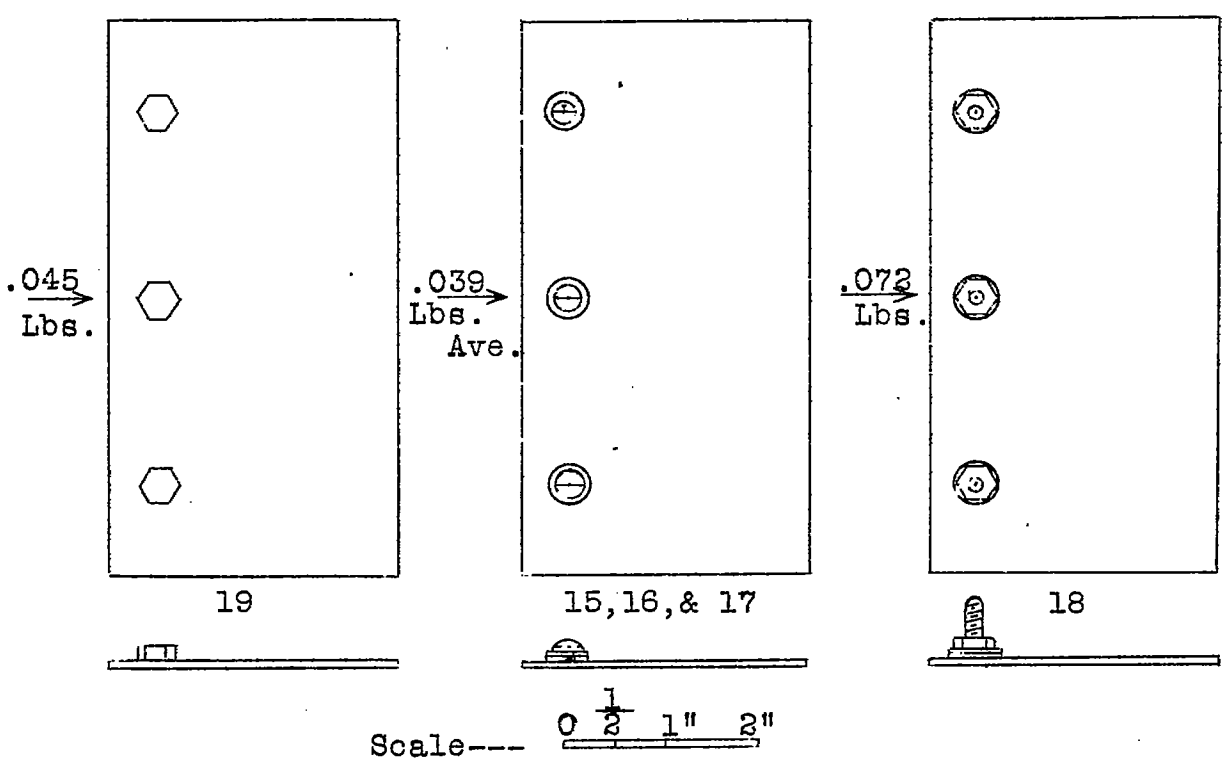

Fig.5