REPORT No. 285

A STUDY OF WING FLUTTER

IN THREE PARTS

By A. F. ZAHM and R. M. BEAR
Aerodynamical Laboratory, Bureau of Construction and Repair,
U. S. Navy

REPORT No. 285

A STUDY OF WING FLUTTER

IN THREE PARTS

By A. F. Zahm and R. M. Bear

SUMMARY

Part I describes vibration tests, in a wind tunnel, of simple airfoils and of the tail plane of an MO-1 airplane model; it also describes the air flow about this model. From these tests are drawn inferences as to the cause and cure of aerodynamic wing vibrations. Part II derives stability criteria for wing vibrations in pitch and roll, and gives design rules to obviate instability. Part III shows how to design spars to flex equally under a given wing loading and thereby economically minimize the twisting in pitch that permits cumulative flutter.

Resonant flutter is not likely to ensue from turbulence of air flow alone past wings and tail planes in usual flying conditions. To be flutterproof a wing must be void of reversible autorotation and not have its centroid far aft of its pitching axis, i. e., axis of pitching motion. Danger of flutter is minimized by so proportioning the wing's torsional resisting moment to the air pitching moment at high-speed angles that the torsional flexure is always small.

INTRODUCTION

Under wind forces a wing or tail plane may vibrate partly in torsion about its length, partly in flexure about its chord direction, and jointly about both. For clearness the motions are studied first separately, then together.

When an airfoil in a uniform stream executes only torsional vibration, its angle of attack with respect to both the relative stream and the fixed stream direction varies periodically; while in flexural vibration alone its angle of attack to the relative stream direction only, varies. In a study of the phenomena the problem then is, to determine the combinations of factors causing these vibrations to be damped, sustained, or reinforced, and the complete nature of the resulting structural oscillation for each case. Naturally the airplane designer is most interested in the practical application of the conditions which tend to preclude oscillation.

A comparatively recent instance of aerodynamic structural vibration was that exhibited by the horizontal tail surfaces on the MO-1 monoplane at normal flying angles, endangering the safety of the craft and lowering its performance efficiency. It was particularly to investigate this defect that the experiments and analyses described in this report were made.

While it is thought that the fundamental factors of aerodynamic structural oscillations have been sufficiently disclosed by the qualitative and theoretical considerations of the report, for favorable practical application, it is nevertheless realized that much remains to de done in the way of a quantitative study of the phenomenon before laws regarding it can be definitely formulated, and theoretical deductions concerning it completely verified.

The following text of the report is a slightly revised form of Report No. 306 prepared for the Bureau of Aeronautics, March 13, 1926, and by it submitted for publication to the National Advisory Committee for Aeronautics.

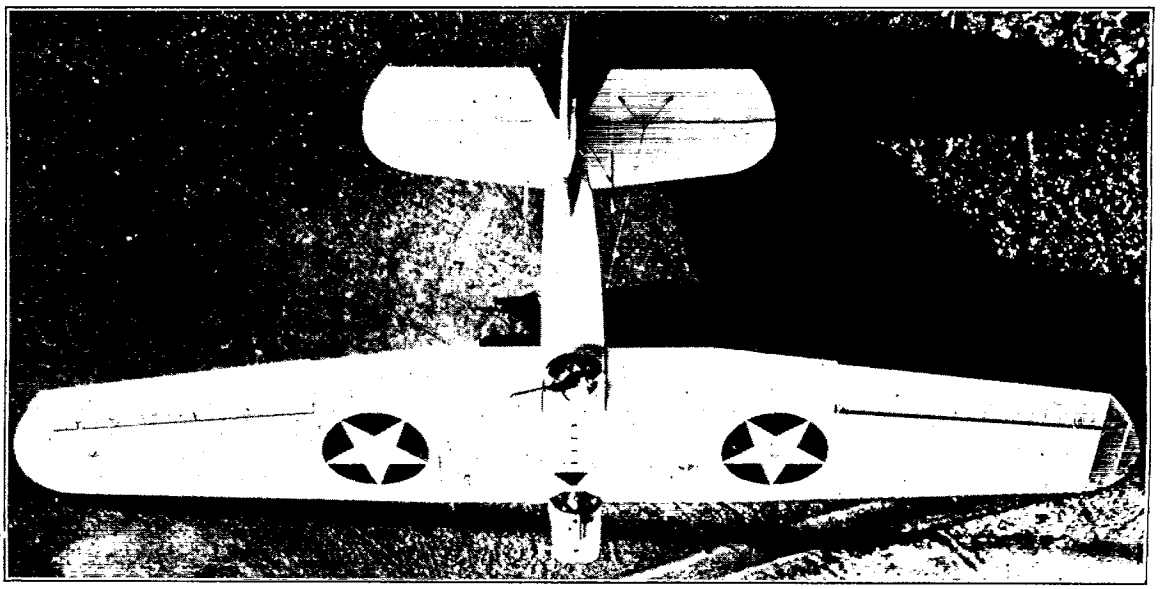

MO-1 MONOPLANE

REPORT No. 285

A STUDY OF WING FLUTTER

IN THREE PARTS

PART I

VIBRATION OF MO-1 TAIL PLANE AND OTHER AIRFOILS

By R. M. Bear

PREFACE

This part of the report is chiefly a description of tests made in February, 1925, and later, for the Bureau of Aeronautics, in the 4 by 4 foot wind tunnel of the C. & R. Aerodynamical Laboratory, Washington Navy Yard, on a model of the MO-1 airplane and several simple models of airfoil structures, in an attempt to determine the reason and remedy for the rolling vibrations of the MO-1 tail surfaces, occurring on the full-size craft in flight. These vibrations were described as being unaffected by the action of the motor and having a variable amplitude and a constant frequency of about 6 cycles per second.

Experiments previously conducted at Langley Field on the full-size airplane, for showing the nature of the airflow over that portion of the wing surfaces next to the fuselage by means of a smoke jet, indicated an undulatory wake from the wing roots passing back over the tail surfaces, and this disturbed airflow was thought to be a very probable source of the tail vibration.

It was therefore the primary object of the wind-tunnel tests to verify the presence of the disturbed airflow about the model, and to determine its effectiveness in producing vibrations of the tail unit, flexibly hinged to the fuselage about a fore and aft axis. (Fig. 1.) If this disturbed flow and vibration were present, additional tests were to be made in an attempt to find a practical means of improving the flow or a possible location for the tail unit outside of its influence.

The somewhat indefinite and partially negative results of these preliminary tests, however, led to a consideration of the flexibility only of the tail surface structure as a possible source of vibrations, and it is the outcome of a few simple experiments and calculations in this field that apparently furnishes the most promising clue to the solution of tail plane and other similar aerodynamic oscillations.

In this report of the tests no attempt has been made to enter into the complex mathematical theory of aerodynamic structural oscillations, and the mere qualitative nature and limited scope of the experiments and results described are evident. The factors entering into this type of oscillation are many, and before their effects can be completely determined other more carefully planned and mathematically outlined investigations are necessary. The effects of some of the most important of these factors for several simple types of airfoil structure are theoretically treated in Part II, however, and certain fundamental requirements of design for an economic spar structure to prevent airfoil flutter are considered in Part III.

TEST APPARATUS

In order to make conveniently the desired tests for tail vibration on the model airplane, the detachable tail unit was mounted on an elastic knife-edge structure of special design (fig. 1), facilitating variation in flexibility and vertical adjustment. One side of the elastic knife-edge was soldered fast in the stem of a brass T whose flange was screwed to the base of the tail unit, and the opposite side was set in a similar slit in the end of a rectangular brass web,

which fitted into a vertical saw slot cut for the purpose at the rear of the fuselage. The elastic knife-edge and the slitted end of the brass web holding it were cut into several coinciding sections, each of which was provided with a small clamping screw. By sliding the brass web in the fuselage slot, the tail unit could be adjusted easily to various heights above its normal position, and by varying the number of elastic knife-edge sections clamped, several different values of restoring moment for a given roll of the tail unit could be obtained.

For exploring the airflow about the model, short lengths of silk and wool[1] threads were used. To show the flow in the vicinity of the tail surfaces, the threads were tied at inch intervals along several fine wires stretched vertically an inch apart on a stiff wire frame, mounted across the wind in the position of the removed tail unit. To explore the flow about the wings and other parts of the model in detail, a strand of wool thread about 3 inches long fastened to a fine needle on the end of a long ⅛-inch drill rod was employed.

VIBRATION TESTS

Before mounting the complete model of the airplane in the tunnel, a brief test was made on the horizontal part of the tail unit alone, with elevators neutral, for reversible autorotation[2] about the X axis, since theory and experiment indicate that surfaces exhibiting this phenomena at any fixed attitude to an air stream are susceptible of sustained rolling oscillations when flexibly hinged in this attitude about an axis along the stream.

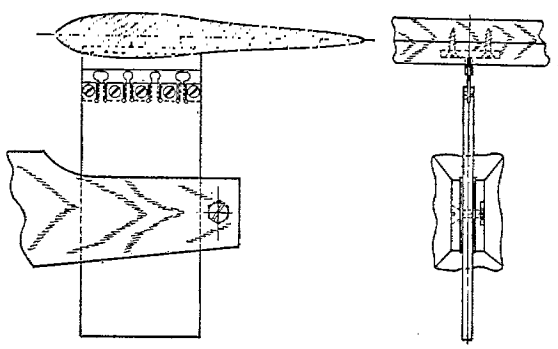

FIG. 1.—MO-1 horizontal tail plane on elastic knife-edge mounting

With the elevators of the tail surface model aligned and set at 0° to the stabilizer, and the stabilizer mounted for balanced free rotation about an axle along its X axis pointing upstream, no autorotation occurred for axle settings to the wind from 0° to 20° and beyond.

A true test for autorotation of this surface at other angles than 0° to the air stream would necessitate changing its attitude to the central axle by rotating the surface about an axis through its center of gravity at right angles to the X axis, while maintaining the central axle exactly in line with the wind and preserving the dynamic balance of the model. Such a test would have shown autorotation near the burble angle of the surface, but was thought unnecessary because the lift curve of the tail plane section indicated no autorotation of the surface at lower angles. (Fig. 7, Part III.)

With the model of the MO-1 airplane in the wind tunnel, and the tail unit, with elevators fixed at 0°, mounted on the elastic knife-edge previously described (fig. 1), no violent rythmic oscillations of the tail surfaces were observed at any natural angle of attack, even though the stiffness of the elastic knife-edge was reduced to a very small value and a final test made with the tail unit freely hinged about the rolling axis.

However, on allowing one or both elevators of the tail plane to swing freely from attached hinges, very violent rolling oscillations of the tail unit developed with the precipitation of pitching oscillations of the one free elevator, or of the two separate free elevators in opposite directions. In this vibratory rolling motion of the tail unit, the inertia of the free elevators always caused them to lag behind their neutral positions relative to the stabilizer throughout a portion of its path, thus causing the air pressure to be in the direction of the motion, and thereby amplifying and sustaining the vibration.

[1] On account of their greater fluffiness and flexibility, wool threads were found to be superior to silk threads as airflow indicators.

[2] The phenomenon of reversible autorotation about an axis along the wind is known to occur for airplane wings at attitudes near their burble points, and an illustration of its effect in producing sustained aerodynamic oscillations of a wing is frequently observed in the rolling flutter of an airfoil near its burble angle of attack, when mounted in the wind tunnel on an end or a central holder. Also certain thick struts of faired twin-cambered section, besides struts having sections of simple geometrical form, as square, triangular or semicircular, have been shown by wind tunnel tests to autorotate in either direction about a centrally located transverse axis for certain attitudes of the surface at or near its symmetrical position to the wind.

When the freely hinged elevators were interconnected to prevent them from pitching in opposite directions no sustained rolling oscillations of the tail unit occurred.

When the model airplane was fitted with a drill-rod spindle, whose axis coincided with the design Y axis of the full-size craft, and was mounted in the tunnel with the wings vertical and the supporting spindle clamped in the balance-shaft chuck, a slight natural pitching of the freely hinged interconnected elevators or of a single free elevator started a pitching oscillation of the model about its torsionally elastic support, and produced a reciprocating interaction of air and inertia forces that developed and sustained violent pitching oscillations of the model and free elevator in lag phase. But, on allowing the model thus mounted to pitch freely about the supporting spindle axis without elastic restraint, no pitching oscillations of the freely hinged interconnected elevators could build up, and any forced oscillations of the model or its elevator were rapidly damped out.

On substituting for the cambered model tail surface, flat surfaces of heavy paper or thin wood, free to pitch or roll without elastic restraint, and adapted by their light weight to respond readily to any general fluctuations in airflow, no marked distrubance of the airflow about any of these surfaces was indicated by their motion until the wings of the model airplane attained the burble angle of around 15°, as the model nosed up; and the turbulent flow then started was observed to persist until the wings passed the 11° angle of attack, as the model nosed down. These observations were made at an air speed of around 10 miles an hour. With higher speeds it was noted, as has been observed before in quantitative tests on models, that the burble angles for the wings advanced slightly.

When the model tail unit was mounted in the tunnel alone on its elastic knife-edge with rudder neutral and the elevator set at several natural flying angles, it acquired slight irregular rolling oscillations of small amplitude at an air speed near 20 miles an hour. Similar slight vibrations were noted also when the tail unit was elastically mounted on the model airplane. It is believed, however, that these irregular oscillations are due to slight natural fluctuations of airflow to be expected around any surface, and are hence of no consequence in predicting unsteady airflow conducive to dangerous aerodynamic vibrations of the full-size structure.

AIRFLOW OVER MODEL

The exploration of the airflow over the wings and in the vicinity of the tail surfaces of the model with threads showed at the usual flying angles an unsteady oscillating wake from the region of the wing roots passing along either side of the fuselage and extending laterally about 2 inches with diminishing vibratory intensity. The tail surface appeared to lie in the midst of this wavering wake when the wings made an angle of about 8° to the tunnel air stream. The middle of the wing wake was defined by an imaginary line lying midway between the half lengths of a long wool thread extending around the wing and streaming back past the tail plane. As the model nosed up from a wing angle of 0°, the tier of threads on the wire frame mounted in place of the tail plane showed slight pitching oscillations as it descended through the wing wake, but no great disturbance of the threads occurred until the wings approached their burble angle of about 15°. A very turbulent flow was then indicated by a violent pitching and swirling of the threads, which appeared to increase in intensity with heights above the fuselage within the wing wake, and persisted to the 11° wing angle as the model nosed down, in agreement with a test previously described. For a wing angle of 0° the slight quivering of the threads above the tail plane showed a very steady flow, but a slight pitching oscillation of the threads below the tail plane indicated the presence of the upper boundary of the wing wake in this vicinity. For a wing angle of about 10° the upper boundary of the wing wake was observed to lie about 1½ inches above the position of the horizontal tail surface on the model, corresponding to about 3 feet on the full-sized craft.

A more detailed exploration of the flow over the model airplane with a single wool thread about 3 inches long on the end of the exploring rod previously mentioned showed the beginning of an unsteady discontinuous flow about the rear portion of the upper surface of the wing opposite its juncture with the fuselage, when a wing angle of 4° was passed as the model nosed up. As a wing angle of 8° was attained this flow became quite turbulent, as was shown by the jerky

curling motion of the exploring thread, which at some points along the afterpart of the upper surface of the wing near the fuselage pointed upstream away from the trailing edge. In the angle between the fuselage and afterpart of the upper surface of the wing the exploring thread showed a slight swirling motion for wing angles above 4°. Similar swirls were also noted all along the upper edges of the fuselage, even for wing angles below 4°. These swirls were caused by the air spilling over the sharp edges of the fuselage, and the direction of their rotary motion was the same as that for the corresponding wing tip vortex.

All efforts to improve the flow about the wing roots by better fairing with plasticine at their fore and aft intersections with the fuselage were apparently ineffective. Also the rounding of the sharp edges of the fuselage did not prevent the minute air swirls about them.

In order to obtain some notion of the degree of turbulence in the air flow about airplane models which may be considered to indicate an undesirable flow about the full-size craft, conducive to structural oscillations of its parts or otherwise impairing its efficient performance, it was thought advisable to explore the flow about a model airplane similar to the MO–1 type, whose full-size performance was known to be satisfactory, and compare it with that about the MO–1, whose full-size performance has been poor. For this purpose a model of the Fokker FT airplane was chosen as one more nearly resembling the MO–1 than any of the existing types, in superficial design and assembly of wing and body.

An exploration of the air flow about the Fokker model showed a vibratory and turbulent flow from the roots and in the wake of the wings very similar to if not worse than that observed on the MO–1.

STRUCTURAL CONSIDERATIONS AND TESTS

Therefore, since the Fokker airplane was known to have given satisfactory service without any serious structural vibrations, and the slightly disturbed flow noted on its model and that of the MO–1 in the vicinity of the tail surfaces seemed insufficient alone to produce any material vibration of these members when rigidly constructed, it was finally supposed, as originally suspected, that the rolling tail plane vibration on the MO–1 airplane was due, not so much to a disturbed air flow from the wings as to a relative weakness in spar structure which permitted a lateral distortion f the surface under its normal air pressures or inertia forces.

This supposition was primarily based on a study of the data for the elastic coefficients of the spars of various typical tail surfaces, determined from spar tip deflection tests made at Langley Field on the tail planes of 12 full-size airplanes, including the MO–1. From these data the ratio of the figures for the rear and forward spar elastic coefficients for the horizontal tail surface of the MO–1 airplane was seen to be 17 as compared to a maximum value of 4 for the tail surfaces of the other planes. In other words, the flexural stiffness of the MO–1 tail surface at the rear spar is 1/17 of its value at the forward spar, while on the other airplanes the rear spar is never less than 1/4 the stiffness of the forward spar.

As emphasizing the necessity for a stiff rear spar as well as a stiff forward spar to resist the distortion of thick tail surfaces of the MO–1 type, attention is here called to N. A. C. A. Report No. 118 describing tests for the pressure distribution over full-size tail surfaces in flight, which show thick-sectioned tail planes to be subjected to exceedingly large twisting moments about their Y axes and to receive their greatest air loading at the leading edge and tips. These conditions are graphically portrayed in Figures 34 and 243 to 264 of that report.

As pertaining especially to the MO–1 tail plane vibration, it was thought that the relatively weak rear spar present permitted a material distortion of the surface under its large aerodynamic torsional moment, the fluctuations of which, due to unsteady air flow, started torsional pitching oscillations of the surface about the forward spar, which was in turn set into a transverse vibration in lag phase by the interaction of the air and inertia loads of the system, thus precipitating a reinforced rolling oscillation of the entire tail unit.

In order to investigate some of the structural conditions conducive to tail surface vibrations, wind tunnel tests were made on several simple airfoil models reproducing in an elementary way some of the essentials of tail-plane structure.

The simplest and perhaps most instructive of these models consisted of a flexurally elastic drill rod ⅛ inch in diameter with either a model cambered tail surface or flat rectangular surface swinging about it. (Figs. 2 and 3.) A special spring was provided for producing on the surface a readily variable pitching restoring moment about the rod to correspond to the torsional reaction of a forward spar. This model therefore represented roughly a tail surface structure without a rear spar to aid in resisting the torsional moment about the supporting forward spar. From

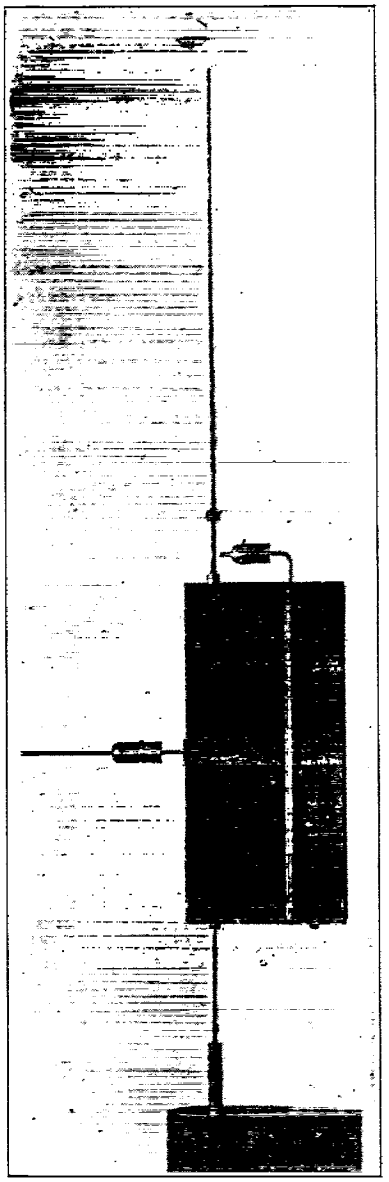

FIG. 2.—Rigid plane surface free to pitch and roll

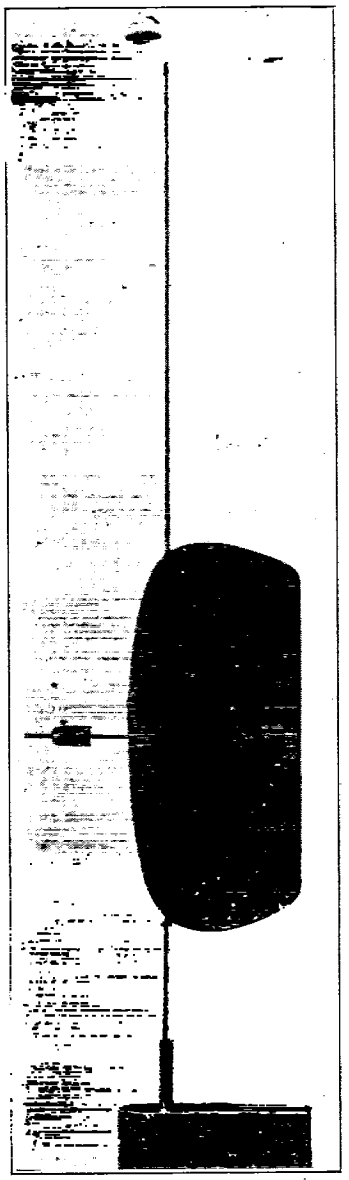

FIG. 3.—Rigid cambered surface free to pitch and roll

the middle of the leading edge of the surface a slender rod projected along the X axis, having a sliding weight on it for varying the position of the center of mass of the system. In the flat-surface model of this type (8⅜ by 4 by ¼ inches), the interior was spanned by ducts at various distances from the leading edge, fitting the flexible drill rod, so as to vary the position of the torsional axis of the surface relative to its center of pressure. The drill rod stood vertically in the tunnel with its lower end set in a short ⅜-inch spindle clamped in the balance chuck, and the remainder left free to flex to and fro with the hinged surface.

Tests on this model surface elastically hinged about its flexible cantilever support (fig. 2) showed it to be susceptible of reinforced oscillations for center of pressure positions on either side of the hinge axis when the center of mass of the surface lay back of the axis; but to resist such oscillations when the center of pressure lay back of the axis with the center of mass in or forward of the axis.

The type of oscillation developed for the unstable positions of these centers was a combination of pitching and rolling in which the surface vibrated in pitch about the supporting rod and at the same time in roll with the transverse flexure of the rod. The interaction of the air and inertia forces thus produced was such as to reinforce the oscillations and give them a resonant violence, even at very low air speeds.

For all dispositions of center of mass and center of pressure the reinforced oscillations of the surface could be stopped by preventing the free flexure of the supporting rod, thus making the hinged surface rigid in roll only; or by an arm along one end of the surface, clamped to it and the supporting flexible rod, thus making the surface rigid in pitch only.

Similar tests with the model surface freely hinged as a weather vane about its flexible cantilever support showed the same positions of center of mass and center of pressure and other conditions for no oscillations as when it was elastically hinged about this support.

In Figure 2 it is seen that the flat-surface model was provided with an elevator having a special sliding counterweight for center of mass adjustment. When this model was hinged about its flexible rod, as in former tests, but with the elevator swinging freely about a rigid axis near its leading edge with its center of pressure and center of mass back of this axis, violent rolling and pitching oscillations of the whole surface developed even when the centers of mass and of pressure of the system were in their stable locations. But when these centers were stably located for the elevator, by moving its counterweight until the center of mass of its system was in its rigid axis, no oscillations of the surfaces occurred for the original stable conditions, and any forced oscillations were rapidly clamped out.

A test made with a rectangular wooden model of the MO-1 horizontal tail plane profile freely hinged about the flexible rod, ¾ of an inch from its leading edge (C. M. & C. P. back of rod) with provision for limiting its amplitude of pitch, showed a development of pitching and rolling oscillations at low air speeds when the rigid model surface was allowed to pitch freely as little as 1° about its flexible cantilever support. When the surface was held rigid in pitch at 0° by clamping it to the supporting flexible rod, no oscillations developed and any forced oscillations were damped out. But it was observed that the very turbulent wake from the body of a person in the tunnel in front of the model gave it irregular rolling oscillations even though the surface was rigid in pitch. However, when the model of the MO-1 airplane was held fixed at various attitudes in front of this surface rigid in pitch but flexible in roll, no marked oscillations occurred.

Excepting surfaces exhibiting reversible autorotation and perhaps any exposed to unusually turbulent airflow, the foregoing tests seem to indicate that a surface supported on a single cantilever spar, irrespective of the center of mass or center of pressure positions, will not be susceptible of reinforced aerodynamic oscillations, even though free to pitch about the spar, if the transverse flexure of the spar is resisted; or, even though free to roll with transverse flexure of the spar, if a material distortion or displacement of the surface in pitch is prevented.

Since the relations of the centers of mass and of pressure to the main cantilever support of a wing, found in these tests to resist sustained oscillations of a rolling and pitching surface, do not normally occur in ordinary plane and cambered surfaces at usual flying attitudes, and their alteration for stability might not often be convenient or economical, it seemed that structural design for the prevention of surface distortion would be the simpler and more practical method of precluding the aerodynamic flutter of cantilever wings or airfoils.

So, further wind tunnel tests were next made on a somewhat crude reproduction of a two-spar tail plane structure (fig. 4) consisting of a wooden vise in which were clamped by their ends two wooden strips of rectangular section, 18 inches long, set parallel to each other about 6 inches

apart, and having a heavy cloth sack stretched taut over them, forming a flat rectangular surface. The base of the vise was fitted with a short ⅜-inch spindle at its center for clamping in the chuck of the balance shaft, thus mounting the model in the tunnel with the surface vertical, and permitting ready changes in angle of attack, by rotating the balance-shaft.

A variation in spar stiffness was obtained by using wooden strips of different breadths and depths. These strips varied in breadth from 2 inches to ½ inch, and in depth from ½ inch to ⅛ inch. They were cut from the same block of white pine, and their relative stiffness was figured, according to the usual engineering formula, to vary directly as the breadth and the cube of the depth.

In trying different methods for keeping the cloth taut over the ends of the spars in the tests on this model, it was found that any bracing of the spar ends or reinforcement of their cloth covering with heavy paper or cardboard interfered with their independent flexure and tended to prevent oscillations of the structure, while any slack in the cloth covering caused it to flutter and precipitated violent oscillations of the structure for all spar stiffness ratios. On account of these and other indefinite circumstances the performance of the model could not be always satisfactorily controlled, but it nevertheless illustrated well the type of oscillation which may occur in a tail surface that materially distorts or warps under its air or inertia loads. The model, however, can not be regarded as a true duplicate of a tail surface structure, on account of the unusual location of the spars at the extreme fore and aft portions of the surface and the lack of interconnecting ribs.

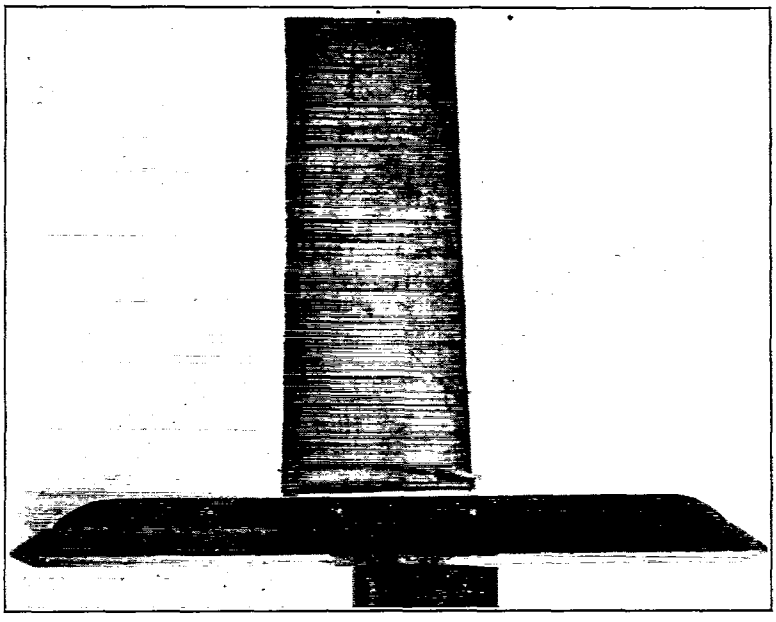

FIG. 4.—Warpable two-spar surface

All of the surface oscillations observed in the tests on this model developed between the air speeds of 25 and 40 miles an hour at or within 1° or 2° of the null or no-lift attitude of the surface, with the two supporting spars always vibrating in lag phase. In general, the observations indicated that the stiffer the spars for a given relative stiffness, the higher the speed required to precipitate the resonant vibration. The relative stiffness of the two spars, however, did not seem to influence materially the wind speed required to start oscillations, as resonant vibrations of the surface were obtained at nearly the same speeds for the same forward spar, when the rear spar stiffness was less than, equal to, and greater than the stiffness of the forward spar. It was noted that the entire vibration could in most cases be stopped by steadying either spar at its tip, or by pitching the surface to angles beyond 2° or 3° of the zero-lift attitude. But, in some cases when the rear spar was extremely flexible, the rear portion of the surface continued to oscillate about the zero-lift setting, even when the forward spar was stopped; and on reinforcing the surface of this structure with cardboard, slight vibrations of the weak rear spar of very small amplitude were observed for several angles beyond the vicinity of the zero-lift position, at which the violent resonant oscillations of the free structure always occurred. When the vise, grasping the spars, was removed from the balance-shaft and more rigidly supported by screwing it fast to the tunnel floor, the oscillations of the structure appeared to be precipitated at slightly lower air speed than on the more flexible shaft support.

Irrespective of any incidental observations, however, the important points noted in these tests were, that in every case the oscillations of the cantilever surface structure were precipitated and reinforced by the occurrence of a warpage in the surface due to the unequal or opposite deflection of the supporting spars under the interaction of the air and inertia forces of the system, and that any reinforcement of the surface covering or rigid interconnection of the spars at their tips which precluded their independent flexure and vibration tended to prevent sustained oscillation of the structure. Also, another important observation, previously intimated, and here emphasized on account of its special bearing on structural design to prevent airfoil flutter, discussed later, is that distortable cantilever surfaces are susceptible of dangerous oscillations only at attitudes in the vicinity of the no-lift setting, and comparatively free from such oscillations at higher angles.

It would therefore seem that, if the spars of full-size tail surfaces and other cantilever airfoil structures were designed with sufficient flexural stiffness to resist their stresses with small deflections, and with such a relative stiffness that their tips would deflect about equally under their stresses at small-angle flying attitudes, there would be no possibility, providing the elevators were rigidly interconnected, of the occurrence of a distortion of the surface in pitch, which would start any violent oscillations in roll.

In an attempt to obtain some idea of the relative stiffness of spars necessary in the MO-1 tail plane to give equal deflection with no surface distortion under the normal air loading at small angles, calculations to this effect were made, using center of pressure data from a special wind tunnel test at 40 miles an hour on a rectangular wooden model of the MO-1 tail plane profile (fig. 7, Part III) and taking into account the oblique leading edge of the surface on the full-size plane and the consequent inclination of the center of pressure line to the spars. The tail plane dimensions and location of the spars were obtained from blueprints of the full-size member.

The relation of the maximum bending moments for the two spars (fig. 8, Part III) obtained from these calculations, indicates that the ratio of the rear and forward spar elastic coefficients for this surface should be between 3 and 4 for minimum distortion under the normal air loading, instead of 17 as actually present. This means that the rear spar should be between ¼ and ⅓ as stiff as the forward spar for small relative spar deflection and minimum surface warpage. These values are for the maximum forward location of the center of pressure and neutral elevators. When the elevators are turned from the neutral position the center of pressure of the surface travels farther backward, and hence a relatively stiffer rear spar than is specified above would then be required for no surface warpage. But by giving the stronger spar sufficient stiffness to resist its maximum stress with small deflection for the rearmost center of pressure position, the former spar stiffness ratios may be used and the surface still confined within small allowable distortion limits for all normal attitudes.

The principal formulas used in stress calculations for the design of cantilever wing spars for equal or minimum relative deflections, and the data for their application to the MO-1 tail plane with the final results, are presented in Part III of this report. In this case only the air loading of the surface has been considered, as in most cases when the center of pressure line lies off of the forward spar and the spar stiffness ratio for no surface warpage is small, the strength and stiffness of structure required to safely carry the air loading with small relative spar deflections and minimum surface distortion will provide sufficient stiffness to prevent any material distortion of the surface under the inertia loading. However, when the center of pressure line lies along the forward spar, or is so related to it as to give a large spar stiffness ratio for no surface warpage, and thus require a relatively weak rear spar to balance the surface air loading, it is likely that a stronger rear spar will be required to provide sufficient stiffness to confine the surface within small distortion limits under a possible inertia load; and if the original spar stiffness ratio were still maintained a stronger and stiffer forward spar than is really necessary to carry the air load would be demanded. In other words, the relative spar stiffness required for no surface distortion under the air loads and the interia loads taken separately, may often be quite different on account of the different positions of application of these loads relative to

the spars, and structural economy necessitates that a compromise be effected between them in arriving at the minimum spar stiffness required to confine the surface within its small allowable distortion limits under either load.

Also, on account of the shift of the center of pressure of an airfoil along the chord with changing angle of attack each attitude of the surface would require a different spar stiffness ratio for no warpage. This fact, however, should cause no perplexity, since the preceding tests indicate that surface warpage is conducive to dangerous flutter only at surface attitudes in the vicinity of the zero-lift position, and for this reason is not particularly objectionable at higher angles. The spar stiffness ratio used to prevent airfoil warpage and consequent flutter should therefore be derived from the center of pressure location for small angle attitudes around the zero-lift setting.

In consideration of the conflicting requirements connected with the separate center of mass and center of pressure positions, it may be stated in general that, for economic design of spars to prevent flutter in cantilever airfoil structures, the weaker spar should always be stiff enough to resist possible inertia loads with small deflections, and the stronger spar stiff enough to resist possible air loads with perhaps somewhat larger deflections, while at the same time the relative spar stiffness required for minimum surface warpage under normal air loads at small flying angles is maintained at or near its estimated value whenever the air load stresses on the weaker spar exceed the inertia load stresses on this spar, but altered for reverse conditions, as the maximum inertia stress and permissible deflection of the weaker spar demands.

By thus roughly proportioning the stiffness of wing and tail plane spars to their received stresses, with special attention to airfoils having tapering plan forms and consequent diagonal loading, it is believed a minimum value of spar stiffness to prevent any dangerous surface warpage will be obtained, which will result in a more economic and lighter spar structure than could otherwise be effected, while at the same time eliminating the possibility of airfoil flutter. For, with the additional torsional rigidity furnished by the ribs and surface covering of a wing or tail plane structure, if the spars are given the proper relative stiffness to deflect as nearly equally as possible under their received loads, their actual stiffness need not be great, since flexure of the surface without twisting is not conducive to flutter.

CONCLUSIONS

1. The airflow over the MO–1 model airplane, especially in the vicinity of the tail plane, is apparently not sufficiently disturbed to produce any marked rythmic oscillations of the rigid tail unit flexibly hinged to the fuselage about its fore and aft axis. The type of airflow about this model is very similar to, if not better than, that about an analogous model of the Fokker FT airplane, whose wings or tail plane have never been reported to flutter in flight.

2. Excepting surfaces having forms or attitudes which exhibit the phenomena of reversible autorotation, a surface that deflects under its received loads about an axis along the wind without otherwise turning or distorting will not be susceptible of sustained oscillations unless it be exposed to exceptionally turbulent, undulatory, or gusty airflow. (Pt. II.)

3. A cantilever surface, such as an ordinary wing or tail plane, which, under its received loads at small, high-speed angles of attack experiences a differential deflection of its supporting spars, may, in perfectly smooth airflow, become susceptible of sustained oscillations, which may attain dangerous amplitudes as the surface approaches its no-lift attitude. The torsional deformation of surface entailed by a differential spar deflection is not so dangerous, however, at large, low-speed angles of attack.

4. The aerodynamic flutter of cantilever airfoil structures may be obviated by locating the center of mass of the system in or forward of the main supporting spar with the center of pressure aft of this member (Pt. II); or, more practically, by providing for sufficient structural rigidity to prevent any material torsional deformation of the surface under its received loads at high speed flying angles. Formulas for estimating the most economic relative spar stiffness for the latter design are given in Part III.

5. The vibration of the MO–1 tail plane results mostly from the large inequality of the ratios of stiffness to bending moment for the two supporting spars; wherefore these spars deflect unequally and entail sufficient surface deformation to precipitate sustained oscillations of the cantilever structure.

6. The vibration of the MO–1 tail plane may be economically minimized by giving its spars the proper relative stiffness required by their bending moment ratios to cause them to deflect about equally under their received loads in normal high speed flight. Calculations (Pt. III) for the spar stresses of this surface show that the rear spar should have somewhere around $\frac{1}{3}$ or $\frac{1}{4}$ the stiffness of the forward spar for minimum differential spar deflection, instead of $\frac{1}{17}$, as found present by spar deflection tests on the full-size MO–1 tail plane.

With the stiffness of the spars correctly proportioned to their received moments it is possible that the torsional rigidity of the surface supplied by the connecting ribs and covering will permit the use of a less stiff forward spar than now present, thus lowering the weight of the structure, while still preventing any objectionable surface deformation that might be conducive to vibrations.

REPORT No. 285

A STUDY OF WING FLUTTER

PART II

THEORY OF OSCILLATIONS OF AN AIRFOIL IN PITCH AND ROLL

By A. F. Zahm

PREFACE

Apropos of Part I the possible types of small oscillation, in a uniform wind, of a rigid airfoil about a longitudinal or transverse axis, round which it elastically pivots, are here analyzed. The more general cases when warpage and flexure occur are left for further consideration.

Figure 5 illustrates the assumed conditions for the airfoil. Subject to moments of wind and elastic torsion it can be assumed to oscillate in roll, pitch, or both at once. We treat the three motions successively for cases of small displacement from equilibrium.

MOTION ABOUT X AXIS

The oscillation in roll is given by

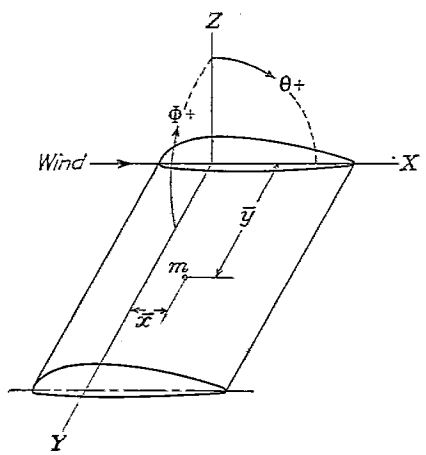

Fig. 5.—Assumed conditions for the airfoil

m = mass of wing, with centroid at $\bar{x}$, $\bar{y}$.
A, B = moments of inertia about X, Y axes.
Φ, $\dot{\Phi}$, $\ddot{\Phi}$ = angle, speed, acceleration of wing about X.
Θ, $\dot{\Theta}$, $\ddot{\Theta}$ = angle, speed, acceleration of wing about Y.
$\bar{y}\ddot{\Phi} \pm \bar{x}\ddot{\Theta}$ = acceleration of m; $m(\bar{y}^2\ddot{\Phi} \pm \bar{x}\bar{y}\ddot{\Theta})$ = moment of m about X.
L, M = moments about X, Y, due to uniform wind.
L_Φ, $L_p = \partial L/\partial\Theta$, $\partial L/\partial p$, where $p = \dot{\Phi} = d\Phi/dt$.
M_Φ, $M_q = \partial M/\partial\Theta$, $\partial M/\partial q$, where $q = \dot{\Theta} = d\Theta/dt$.

$$A\ddot{\Phi} = L_p\dot{\Phi} - k_\Phi\Theta \tag{1}$$

where $L_p = \partial L/\partial p$* is the damping derivative, $k_\Phi = -\partial L/\partial\Phi$ the elastic restoring moment per radian of Φ. The damping coefficient, L_p/A is positive for autorotative surfaces, zero or negative for others; k_Φ/A is always negative and finite.

* In his Stability in Aviation, Bryan writes $L_p = -\partial L/\partial p$, a convention not so much used by his followers. Here we use the standard symbols adopted by the National Advisory Committee for Aeronautics.

From textbooks we derive the following properties of (1): for $L_p=0$ the motion is simple harmonic; for $L_p<0$ it is either damped harmonic or subsiding aperiodic; for $L_p>0$ it is divergent either oscillatingly or continuously. Hence to secure decay of vibration the airfoil should at all wind speeds, have $L_p<0$, viz, antirotative.

MOTION ABOUT Y AXIS

The oscillation in pitch is

$$B\ddot{\Theta}=M_q\dot{\Theta}-(k_\Theta-M_\Theta)\Theta \tag{2}$$

where k_Θ is the elastic moment per unit of Θ. The damping derivative M_q is usually negative or antirotative; the coefficient of Θ is negative except when $k_\Theta<M_\Theta$.

From textbooks we derive the following properties of (2): For $k_\Theta-M_\Theta=0$ the motion continuously asymptotes a finite limit; for $k_\Theta-M_\Theta>0$ it is either damped harmonic or subsiding aperiodic; for $k_\Theta-M_\Theta<0$ it diverges continuously. Hence to insure decay of vibration in pitch the airfoil should, at all wind speeds have $k_\Theta-M_\Theta>0$.

MOTIONS ABOUT X, Y

If the Φ, Θ motions are simultaneous they add to (1) the moments $m\bar{x}\bar{y}\Theta-L_\Theta\Theta$; to (2) the moment $m\bar{x}\bar{y}\ddot{\Phi}$.† Thus,

$$A\ddot{\Phi}-L_p\dot{\Phi}+k_\Phi\Phi+m\bar{x}\bar{y}\ddot{\Theta}-L_\Theta\Theta=0 \tag{3}$$

$$B\ddot{\Theta}-M_q\dot{\Theta}+(k_\Theta-M_\Theta)\Theta+m\bar{x}\bar{y}\ddot{\Phi}=0$$

where all the coefficients are positive, save possibly L_p, L_Θ, M_q, M_Θ.

To solve (3) first put therein $D=d/dt$: thus

$$(AD^2-L_pD+k_\Phi)\Phi+(m\bar{x}\bar{y}D^2-L_\Theta)\Theta=0 \tag{3}$$

$$m\bar{x}\bar{y}D^2\Phi+[BD^2-M_qD+(k_\Theta-M_\Theta)]\Theta=0$$

whence eliminating Θ gives

$$\{(AD^2-L_pD+k_\Phi)[BD^2-M_qD+(k_\Theta-M_\Theta)]-(m\bar{x}\bar{y})^2D^4+L_\Theta m\bar{x}\bar{y}D^2\}\Phi=0 \tag{4}$$

which is a linear differential equation in Φ with constant coefficients, expressing the airfoil motion about X. Putting Θ for Φ in (4) gives the motion about Y. We now can solve (4) for the amplitude; but to ascertain merely whether the motion is stable or not it suffices to examine the coefficients of (4), as in the next three paragraphs.

CRITERIA FOR STABILITY ABOUT X, Y

If $\bar{x}$ or $m\bar{x}\bar{y}\ D^2-L_\Theta$ is zero, the last two terms of (4) vanish, leaving in form the simple product of (1), (2). If for this case, (1), (2) both are stable their resultant (4) must be so. Now $\bar{x}=0$ if the airfoil centroid is on the pitch axis Y; and $L_\Theta=\partial L/\partial\Theta=0$ for the burble incidence. Frequently $m\bar{x}\bar{y}\ddot{\Theta}$ is small and negligible. In this case we conclude that if the centroid is on the Y axis, or if the equilibrium incidence is burble, the simultaneous small motions (3) abo X and Y are stable if the uniaxial motions (1), (2) are so.

If $\bar{x}$ or $m\bar{x}\bar{y}D^2-L_\Theta$ is not zero, we examine the auxiliary equation of (4), viz

$$aD^4+bD^3+cD^2+dD+e=0 \tag{5}$$

where $a=AB-(m\bar{x}\bar{y})^2$; $b=-AM_q-BL_p$; $c=A(k_\Theta-M_\Theta)+L_pM_q+m\bar{x}\bar{y}\ L_\Theta$; $d=-L_p(k_\Theta-M_\Theta)-k_\Phi\ M_q$; $e=k_\Phi\ (k_\Theta-M_\Theta)$. By Routh's rule (4) is stable if a, b, c, d, e and Routh's discriminant $bcd-ad^2-eb^2$ all are positive.

† For closer estimate $-M_p\dot{\Phi}$ can be added here. It vanishes for well-known conditions.

For usual conditions a, b, c, d, e are positive. Putting the given values of these in the discriminant one finds [1] it positive if

$$-L_p M_q/L_\Theta > m\bar{x}\bar{y} \tag{6}$$

which therefore is a criterion of stability for the motion (4). One device for realizing (6) is to make the centroidal distance $\bar{x} \lessgtr 0$, or small positive; another is to magnify $-L_p M_q/L_\Theta$.

SUMMARY

The present analysis suggests the following rules of design to obviate airfoil flutter.

1. Use an airfoil having L_p negative, to avoid autorotative tendency; choose one with $-L_p M_q/L_\Theta > m\bar{x}\bar{y}$.
2. Make $\bar{x} \lessgtr 0$, or small if positive; viz., avoid placing the airfoil centroid far aft of the axis of pitch rotation.
3. Make $k_\Theta > M_\Theta$; viz., make the coefficient of elastic pitching moment exceed that of wind disturbing moment at all speeds.

In practice these stability devices may have to be compromised with other design provisions.

ROTATIONAL AMPLITUDE, SPEED, PERIOD

For the oscillations (1), (2) about a single axis the amplitude, speed, and period can be found directly by well-known procedure. For the double motion (3) one finds by solution of (4).

$$\Phi = C_1\Theta^{\lambda_1 t} + C_2\Theta^{\lambda_2 t} + C_3\Theta^{\lambda_3 t} + C_4\Theta^{\lambda_4 t} \tag{7}$$

where λ_1, λ_2, λ_3, λ_4, are the four roots of (5), and the C's are integration constants determined by the initial conditions. Putting Θ for Φ in (4) and solving gives Θ in the form (7) except for different integration constants. The plot of Φ or Θ against t is in general the resultant of four exponential or sine curves which represent the four component terms of (7). Examples of such component curves are given in works on aircraft stability.

CASE OF THE NONRIGID AIRFOIL

In practice a fluttering airfoil pitches and rolls by structural deformation, say by flap motion or spar flexure. In this latter case the rotation angles Φ, Θ are roughly those of the median airfoil section, and the damping coefficients in (1), (2) may be written $h_p + L_p$, $h_q + M_q$, where the h's are viscous moments per unit of p, q, due to internal friction of the airfoil structure. The magnitude of k_Φ, k_Θ, h_p, h_q, could be determined in a full-scale craft, but not so well predicted from a model test, except perhaps when both model and full-scale were of uniform material besides being structurally similar. The case for a wing and aileron vibrating jointly or independently is treated in the cited N. A. C. A. Mem. No. 223, "On the Stability of Oscillations of an Airplane Wing," by A. C. Von Baumhauer and C. Koning. See also "Wing Flutter," by R. A. Frazer, Reports and Memoranda No. 1042, British Aeronautical Research Committee.

PRACTICAL DETERMINATION OF L_p, M_q

The damping derivatives, L_p, M_q, can best be found experimentally, say by testing a wing model with an oscillator in a uniform air stream. They can also be estimated as explained in textbooks, e. g. Wilson's Aeronautics, article 40; ready formulas for L_p, M_q, to suit various practical shapes and loadings, may thus be derived.

For example, assuming the load uniform along Y, one finds $L = 4/3.s\bar{y}^3/V$, where V is the flight speed, and $s = dL/d\Theta$ is the slope of the lift curve for the particular wing. Again assuming an elliptic loading along Y one finds $L_p = s\bar{y}^3/V$.

In the general equations (1), (2) therefore, the damping derivatives are symbolized broadly by L_p, M_q rather than by more specific quantities applicable to but one wing type. Tables giving experimental values of L_p, M_q along with the usual wing characteristics for a few typical wing types, would be serviceable to aeronautical engineers.

[1] For a more detailed treatment, illustrated by experiment, the reader is referred to Tech. Mem. No. 223 of the National Advisory Committee for Aeronautics.

REPORT No. 285

A STUDY OF WING FLUTTER

PART III

DESIGN OF SPARS FOR EQUAL FLEXURE

By R. M. Bear

PREFACE

The foregoing text shows that a cantilever airfoil, not reversibly autorotative, is void of flutter of its spars flex equally in the same direction under their received loads; e. g., if their ensuing curvatures are the same at corresponding sections. A method of designing the spars for such equal flexure when given the wing plan and profile is outlined in the ensuing text. By its use the minimum torsional rigidity of structure required to prevent flutter may be obtained with a maximum economy in material.

CURVATURE RATIO

By mechanics the elastic curvature at any beam section is $1/R = M/EI$, where R is the radius of curvature of the neutral surface, M the bending moment, E the modulus of elasticity, I the moment of inertia of the section area about its neutral axis. Hence for corresponding sections of two parallel spars,

$$\frac{\text{Curvature}_2}{\text{Curvature}_1} = \frac{R_1}{R_2} = \frac{M_2 E_1 I_1}{M_1 E_2 I_2} \tag{1}$$

Usually $E_1 = E_2$; hence for equal flexure ($R_1 = R_2$) the spars must be designed so that

$$I_1/I_2 = M_1/M_2 \tag{2}$$

STIFFNESS RATIO

The stiffnesses of the two spars at corresponding sections are as the bending moments there causing equal flexure; that is

$$\frac{\text{Stiffness}_1}{\text{Stiffness}_2} = \frac{M_1}{M_2} = \frac{I_1}{I_2} \tag{2a}$$

Since the deflection of a beam is a direct function of the curvature, the stiffnesses of beams are compared by comparing the loads they can carry with a given deflection, or the deflections at corresponding sections for a given loading.

STRESS RATIO

By mechanics the maximum unit fiber stress at any beam section is $s = Me/I$, e being the distance of the outermost fiber from the neutral axis of the section. Hence for corresponding sections of the two spars,

$$\frac{\text{Stress}_1}{\text{Stress}_2} = \frac{s_1}{s_2} = \frac{M_1 e_1 I_2}{M_2 e_2 I_1} \tag{3}$$

and for equal flexure, from (2)

$$s_1/s_2 = e_1/e_2 \tag{4}$$

From this relation it is seen that if the spar of greater e is first designed for the maximum allowable unit stress, $s_{max.}$, the other will have $s<s_{max.}$, and hence a greater factor of safety and ample strength; but if the spar of lesser e is first designed for $s_{max.}$, the other will have $s>s_{max.}$, and be unsafe.

Therefore, to provide conveniently for structural safety, it is best, first to design the deeper spar for sufficient strength, and then the shallower spar for equal flexure.

STRENGTH RATIO

The strengths of the two spars at corresponding sections are inversely as the maximum unit fiber stresses there produced by a given bending moment. Hence, making $M_1=M_2$ in (3),

$$\frac{\text{Strength}_1}{\text{Strength}_2}=\frac{s_2}{s_1}=\frac{I_1e_2}{I_2e_1} \tag{5}$$

The strengths of beams are compared by comparing the loads they can carry with an assigned maximum unit fiber stress, or by comparing the maximum fiber stresses produced by an assigned loading.

RELATIONS OF STRENGTH AND STIFFNESS

If in (5) $e_1=e_2$, the strength ratio equals the stiffness ratio in (2). For this condition the two beams have equal safety factors, and for the same permissible maximum depths, less weight than for e_1, e_2 unequal. But, since the maximum depths of spars and hence also their least weights are determined by the airfoil profile depths, the relation of strength and stiffness ratios will vary with different airfoils and hence has no special significance.

GENERAL DESIGN PROCEDURE

In obtaining actual values for I_1, I_2 in (2), the deeper spar is considered first, and its value of e_1 selected, equal to or less than half the maximum wing depth. Then

$$I_1=M_1e_1/s_{max.} \tag{6}$$

whence, from (2)

$$I_2=r_M M_1e_1/s_{max.}=M_2e_1/s_{max.} \tag{7}$$

where $r_M=M_2/M_1$.

A suitable value of $e_2<e_1$, corresponding to the wing depth is then chosen for the shallower spar.

As mentioned previously, this order of procedure will keep $s_2<s_{max.}$ and the safety factor always above the assigned value, but not conversely.

SPAR STRESS EQUATIONS

To obtain M_1 and M_2 of the preceding formulas, the separate loadings of the two spars must be determined. In the ensuing text the fundamental equations and derived general formulas for loading intensity W, vertical shear Z, and bending moment M, for the two parallel spars of a cantilever airfoil with oblique leading edge and consequent diagonal loading, are presented, and their use illustrated in designing the MO-1 tail plane for minimum distortion at small angles of attack to prevent flutter.

Figure 6 is a diagram of an airfoil of the above-mentioned type, resembling the MO-1 tail plane in plan form. Referring to it and the indicated symbols the following equations are readily understood,

The equations for the condition of static equilibrium, assuming equal deflection of the two spars, are,

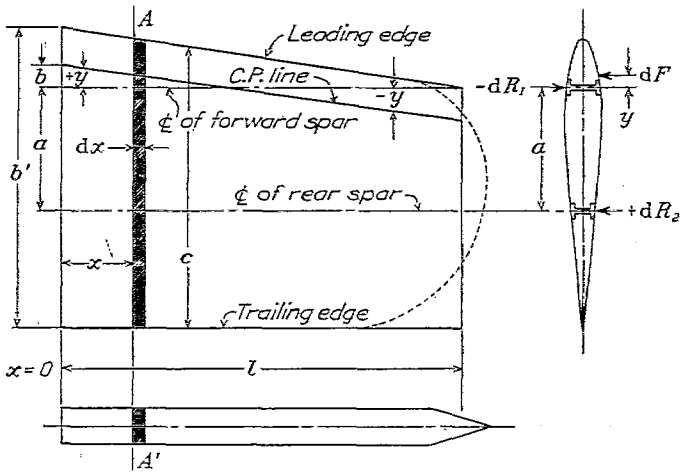

FIG. 6.—Diagram of airfoil

$AA'dx$=any elementary transverse section of a tail plane or wing.
dF=air force acting on the surface of this section at its center of pressure.
dR_1=elementary reaction of forward spar at this section.
dR_2=elementary reaction of rear spar at this section.

$$-dR_1.\ a = dF.\ (a+y) \tag{8}$$

$$dR_2.\ a = dF.\ y \tag{9}$$

The intensity of loading, W at any spar section is of opposite sign to the elementary reaction at this section. The equation for W is

$$W = -\frac{dR}{dx} \tag{10}$$

The equation for vertical shear Z at any spar section is

$$Z = \int_x^l W dx = -\int_x^l dR \tag{11}$$

The equation for bending moment, M at any spar section is

$$M = \int_x^l Z dx \tag{12}$$

The equation of the center of pressure line or load line for X axis along the forward spar axis is

$$y = sx + b \tag{13}$$

The equation of the airfoil leading edge line for X axis along the trailing edge line parallel to the spars is

$$c^* = s'x + b' \tag{14}$$

Also,

$$dF = Cdx \tag{15}$$

where $C = 1/2\ C_{NF}\rho V^2$, and

C_{NF} = coefficient of normal force, NF perpendicular to wing chord.
ρ = air density in slugs per cubic feet.
V = air speed in feet per second.

---

*GENERAL FORMULAS FOR TAPERED WINGS

c is the wing chord at any section. If the trailing edge of the wing is inclined at a slope s'' to the spars, equation (14) becomes

$$c = (s' - s'')x + b' \tag{14}$$

By substituting in the deduced formulas for W, Z, and M, $(s'-s'')$ for s', these formulas become more general and apply to wings with leading edge and trailing edge both tapered.

FORWARD SPAR STRESSES

Fundamental equations—

$$-\mathrm{d}R_1.a = \mathrm{d}F.\ (a+y) \tag{8}$$

$$-\mathrm{d}R_1.a = Cc\mathrm{d}x.\ (a+sx+b) \tag{16}$$

$$-\mathrm{d}R_1.a = C\mathrm{d}x.\ (s'x+b')\ (a+sx+b) \tag{17}$$

$$-\mathrm{d}R_1 = \frac{C}{a}(asx.\ \mathrm{d}x + ss'x^2.\ \mathrm{d}x + bs'x.\ \mathrm{d}x + b'a.\ \mathrm{d}x + b'sx.\ \mathrm{d}x + bb'.\ \mathrm{d}x) \tag{17}$$

Loading intensity, W—

$$W_1 = -\frac{\mathrm{d}R_1}{\mathrm{d}x} \tag{10}$$

$$W_1 = \frac{C}{a}\{ss'x^2 + x\,[s'\ (a+b) + sb'] + b'(a+b)\} \tag{18}$$

Vertical shear, Z—

$$Z_1 = -\int_x^l \mathrm{d}R_1 = \int_x^l W_1\ \mathrm{d}x \tag{11}$$

$$Z_1 = \frac{C}{a}\left[\frac{ss'}{3}\ (l^3-x^3) + \frac{s'(a+b)+b's}{2}\ (l^2-x^2) + b'(a+b)\ (l-x)\right] \tag{19}$$

Bending moment, M—

$$M_1 = \int_x^l Z_1\ \mathrm{d}x \tag{12}$$

$$M = \frac{C}{a}\left[\frac{ss'}{12}\ (3l^4-4l^3x+x^4) + \frac{s'(a+b)+b's}{6}\ (2l^3-3l^2x+x^3) + \frac{b'(a+b)}{2}\ (l-x)^2\right] \tag{20}$$

REAR SPAR STRESSES

Fundamental equations—

$$\mathrm{d}R_2.a = \mathrm{d}F.y \tag{9}$$

$$\mathrm{d}R_2.a = Cc\mathrm{d}x.\ (sx+b) \tag{21}$$

$$\mathrm{d}R_2.a = C\mathrm{d}x.\ (s'x+b')\ (sx+b) \tag{22}$$

$$\mathrm{d}R_2 = \frac{C}{a}\ (ss'x^2.\ \mathrm{d}x + b'sx.\ \mathrm{d}x + bs'x.\ \mathrm{d}x + bb'.\ \mathrm{d}x) \tag{22}$$

Loading intensity, W—

$$W_2 = -\frac{\mathrm{d}R_2}{\mathrm{d}x} \tag{10}$$

$$W_2 = -\frac{C}{a}[ss'x^2 + x\ (sb'+s'b) + bb'] \tag{23}$$

Vertical shear, Z—

$$Z_2 = -\int_x^l \mathrm{d}R_2 \tag{11}$$

$$Z_2 = -\frac{C}{a}\left[\frac{ss'}{3}\ (l^3-x^3) + \frac{b's+bs'}{2}\ (l^2-x^2) + bb'(l-x)\right] \tag{24}$$

Bending moment, M—

$$M_2 = \int_x^l Z_2\ \mathrm{d}x \tag{12}$$

$$M_2 = -\frac{C}{a}\left[\frac{ss'}{12}\ (3l^4-4l^3x+x^4) + \frac{b's+bs'}{6}\ (2l^3-3l^2x+x^3) + \frac{bb'}{2}\ (l-x)^2\right] \tag{25}$$

SPAR STRESSES FOR SLOPES, $s, s'=0$

For a tail plane or wing with leading edge parallel to the spars, s and s' in the previous equations become 0, and the equations for the spar stresses are simplified as follows:

FORWARD SPAR

$$W_1=\frac{C}{a}\,b'\,(a+b) \tag{26}$$

$$Z_1=\frac{C}{a}\,[b'(a+b)\,(l-x)] \tag{27}$$

$$M_1=\frac{C}{a}\left[\frac{b'(a+b)}{2}\,(l-x)^2\right] \tag{28}$$

REAR SPAR

$$W_2=-\frac{C}{a}\,bb' \tag{29}$$

$$Z_2=-\frac{C}{a}[bb'(l-x)] \tag{30}$$

$$M_2=-\frac{C}{a}\left[\frac{bb'}{2}\,(l-x)^2\right] \tag{31}$$

SPAR STIFFNESS RATIO, r_M

The ratio of the bending moments or the relative stiffness required for equal spar flexure then becomes from (28), (31), (2)

$$\frac{M_1}{M_2}=\frac{I_1}{I_2}=r_M=-\frac{a+b}{b}=-\left(\frac{a}{b}+1\right) \tag{32}$$

THE ± SIGNS

In the foregoing equations, the distance between the spars, a is always positive, and b positive or negative, depending on whether the center of pressure for $x=0$ is forward or aft of the front spar axis.

CONDITIONS FOR NO SURFACE WARPAGE

For equal flexure of the spars in the same direction, and hence no surface warpage, r_M must always be $+$; i. e., M_1, M_2 must have like signs. This condition is most always fulfilled in the usual location of spars and is effected by so placing them that all or the greater part of the airfoil center of pressure line, or load line, lies between them.

In order that r_M always be $+$ in (32), b must always be $-$, and numerically less than a. This condition fixes the center of pressure line between the spars, and for this special case of parallelism the spar loadings, shears, and bending moments all have like signs.

See Figure 9 in which a and b of the preceding equations are replaced by n and $-x$, and $r_M=y=R_1/R_2$.

EQUATIONS FOR MO-1 TAIL PLANE

Substituting in the previous equations the following values obtained from aerodynamic data and design drawings for the MO-1 tail plane, (Table I; figs. 7, 8.)

$s=-0.1290$	$b=0.0575$	$a=2.417$
$s'=-0.1721$	$b'=6.448$	$l=6.33$

the following equations are obtained.

FORWARD SPAR

$$W_1 = C(0.0092x^2 - 0.5204x + 6.601)$$

$$Z_1 = C(0.2602x^2 - 0.0031x^3 - 6.601x + 32.14)$$

$$M_1 = C(0.00077x^4 - 0.0868x^3 + 3.301x^2 - 32.14x + 91.94)$$

REAR SPAR

$$W_2 = C(0.3483x - 0.0092x^2 - 0.1534)$$

$$Z_2 = C(0.0031x^3 - 0.1741x^2 + 0.1534x + 5.231)$$

$$M_2 = C(0.0580x^3 - 0.00077x^4 - 0.0767x^2 - 5.231x + 22.69)$$

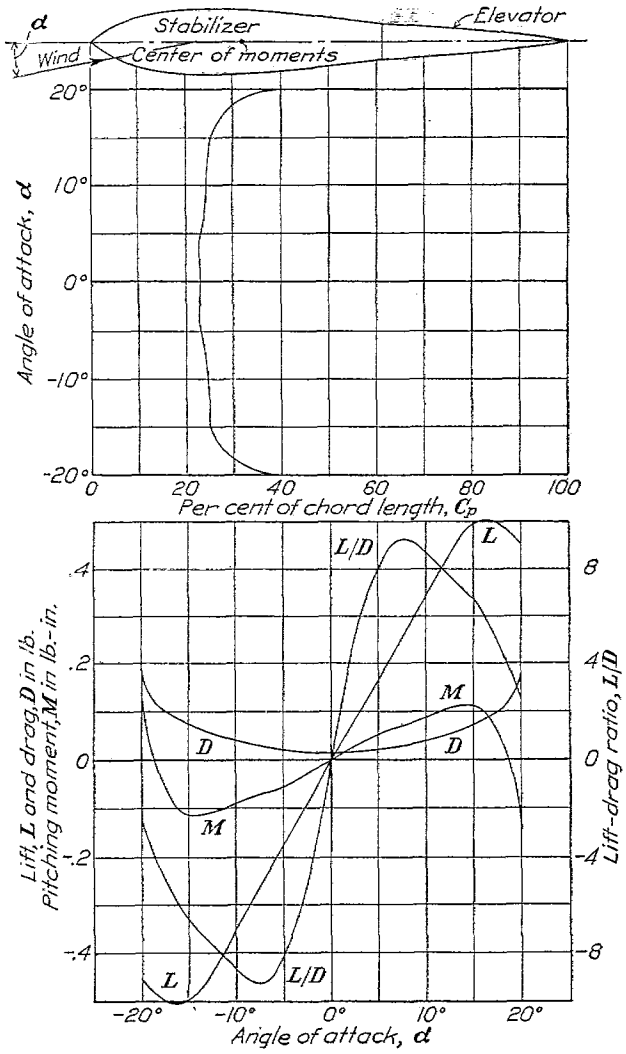

FIG. 7.—Profile characteristics. Air speed 40 miles per hour. Original data corrected for model asymmetry

The maximum bending moments occur at $x=0$, and by (2a) the spar stiffness ratio here required for equal flexure and no flutter is

$$r_M = \frac{M_1}{M_2} = \frac{I_1}{I_2} = \frac{91.94}{22.69} = 4.05$$

This ratio decreases as x increases, as shown in Figure 8.

For $l=7.00$ instead of 6.33 the above equations becom

FORWARD SPAR

W_f =same as before

$$Z_f = C(0.2602x^2 - 0.0031x^3 - 6.601x + 34.51)$$

$$M_f = C(0.00077x^4 - 0.0868x^3 + 3.301x^2 - 34.51x + 107.7)$$

REAR SPAR

W_r =same as before

$$Z_r = C(0.0031x^3 - 0.1741x^2 + 0.1534x + 6.410)$$

$$M_r = C(0.0580x^3 - 0.00077x^4 - 0.0767x^2 - 6.410x + 30.55)$$

and

$$r_M = \frac{M_f}{M_r} = \frac{I_f}{I_r} = \frac{107.7}{30.55} = 3.53.$$

For several corresponding spar sections, the variable factors in parentheses in the above equations for $l = 6.33$ were evaluated and are given with their ratios in Table II. These data are plotted in Figure 8.

TABLE I.—*Air forces, moments and center of pressure for MO-1 horizontal tail plane section at 40 miles per hour*

Twin camber section. Elevator neutral.

Angle of attack α	Lift L	Drag D	Lift/drag, L/D	Pitching moment about M axis[1]	Center of pressure, per cent chord length, C_p
°	*Pounds*	*Pounds*		*Lb.-in.*	
0	0.0	0.019	0.0	0.0	22.7
1	.038	.019	2.06	+.011	22.8
2	.079	.019	4.25	.021	22.8
3	.117	.020	5.94	.032	22.5
4	.155	.022	7.00	.044	22.1
6	.238	.027	8.92	.062	23.2
8	.323	.035	9.26	.074	23.9
10	.407	.046	8.75	.090	24.1
12	.488	.062	7.92	.102	24.4
14	.557	.078	7.15	.112	24.7
16	.589	.098	6.04	.104	25.5
18	.574	.125	4.57	+.037	28.7
20	.527	.215	2.45	−.141	38.5

[1] M axis of model holder is on chord center line, 31.1 per cent of chord length aft of the leading edge.

Dimensions of model, 8.18 by 3.218 inches.

$C_L = 1.337$ L
$C_D = 1.337$ D
$K_y = 0.00342$ L
$K_x = 0.00342$ D
$C_R = \sqrt{C_L^2 + C_D^2}$
Tan $\theta = C_L/C_D$
$C_{NF} = C_R \sin(\alpha + \theta)$
C_{NF} =coefficient of normal air force $NF \perp$ to wing chord.

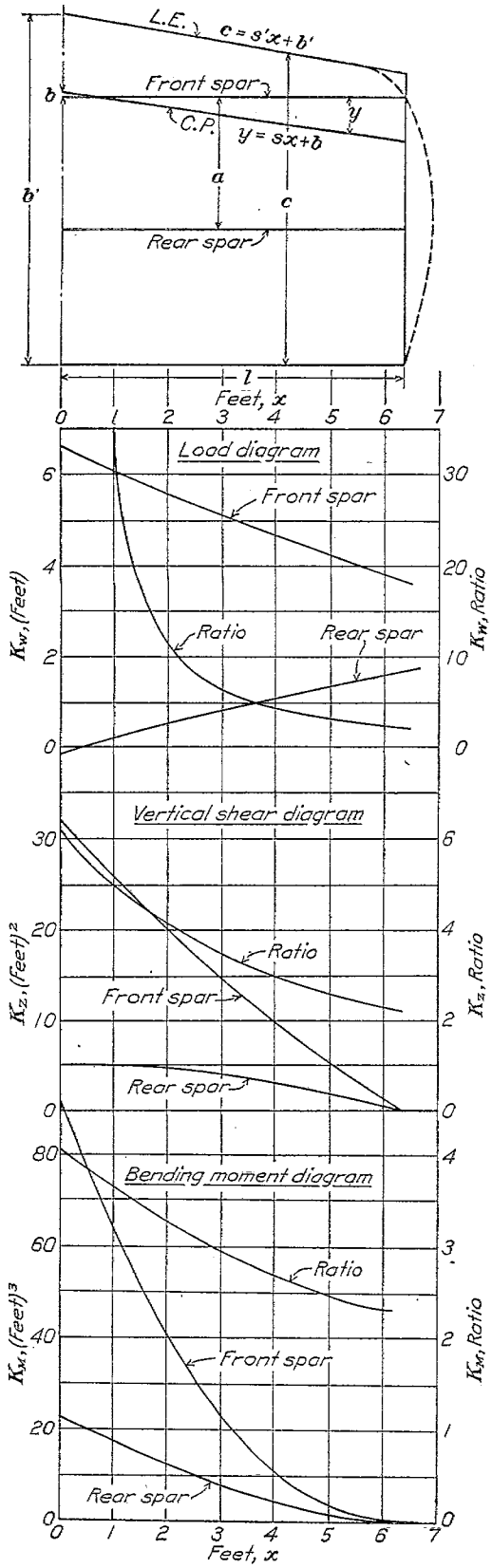

PLAN

$a = 29'' = 2.417'$

b

$s = -0.1290$
$s' = -0.1721$
$y = -0.1290x + 0.0575$
$c = -0.1721x + 6.448$

LOAD DIAGRAM

$W = K_W C$

$L = \int_0^x W dx$

W = loading in lb. per foot run
L = total load in lb.

VERTICAL SHEAR DIAGRAM

$Z = K_Z C = \int_x^l W dx$

Z = vertical shear in lb.

BENDING MOMENT DIAGRAM

$M = K_M C = \int_x^l Z dx$

M = bending moment in lb.-ft.

$C = \frac{1}{2} C_{NFP} V^2$

C_{NF} = coefficient of normal air force, $NF \perp$ to wing chord
ρ = air density in slugs per cu. ft.
V = air speed in feet per sec.

FIG. 8.—MO-1 horizontal tail plane. Load, shear and bending moment diagrams for spars deflecting equally under surface air loading

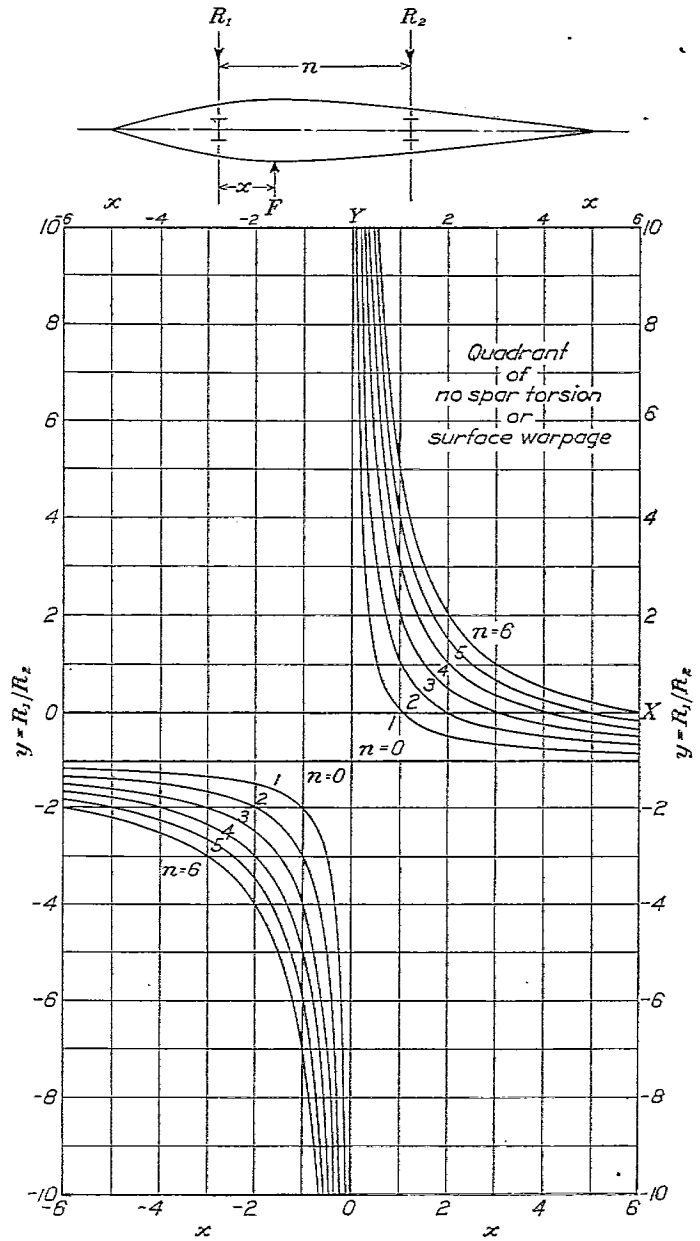

FIG. 9.—Rectangular two-spar airfoil spar-stiffness ratios for equal flexure

For equal spar deflection under load F,

$$R_1/R_2 = y = \frac{n-x}{x}$$

For $+x<n$, y is always $+$ and the spars flex equally in the same direction without torsion or surface warpage.

For $+x>n$, and any $-x$, y is always $-$ and the spars flex equally in opposite direction with torsion and surface warpage.

TABLE II.—*Spar stress factors and ratios for design of MO-1 tail plane for equal spar flexure under surface air loading* [1]

Distance along span x	Forward spar			Rear spar			Ratios		
	K_W	K_M	K_Z	K_W	K_M	K_Z	r_W	r_M	r_Z
Feet									
0	+6.60	+91.94	+32.14	−0.15	+22.69	+5.23	−43.05	+4.05	+6.14
1	6.09	63.02	25.79	+0.19	17.44	5.21	+32.76	3.61	4.95
2	5.60	40.19	19.95	0.51	12.37	4.87	11.05	3.25	4.10
3	5.12	22.96	14.59	0.81	7.81	4.21	6.32	2.94	3.47
4	4.67	10.85	9.70	1.09	4.06	3.25	4.28	2.67	2.98
5	4.23	3.41	5.25	1.36	1.39	2.03	3.11	2.45	2.59
6	3.81	0.20	+1.24	1.60	0.09	+0.54	2.38	2.30	2.27
6.33	3.68	0.00	0.00	1.68	0.00	0.00	2.19	2.30	2.20
6.5	+3.61	+0.05	−0.62	+1.72	+0.02	−0.29	+2.10	+2.37	+2.14

[1] For surface span, 6.33 feet and center of pressure 22.7 per cent of chord from leading edge. See Figure 8.

$$W = K_W C \qquad Z = K_Z C \qquad M = K_M C \qquad C = \tfrac{1}{2} C_{NFP} \rho V^2$$

FORWARD SPAR

$$K_W = 0.00918x^2 - 0.5204x + 6.6014$$
$$K_M = 0.00077x^4 - 0.0868x^3 + 3.3007x^2 - 32.1364x + 91.9446$$
$$K_Z = 0.2602x^2 - 0.0031x^3 - 6.6014x + 32.1364$$

REAR SPAR

$$K_W = 0.3483x - 0.00918x^2 - 0.1534$$
$$K_M = 0.0580x^3 - 0.00077x^4 - 0.0767x^2 - 5.2309x + 22.6890$$
$$K_Z = 0.0031x^3 - 0.1741x^2 + 0.1534x + 5.2309$$

W = loading in pounds per foot run
M = bending moment in foot-pounds
Z = vertical shear in pounds

AERODYNAMICAL LABORATORY,
BUREAU OF CONSTRUCTION AND REPAIR, UNITED STATES NAVY,
WASHINGTON, D. C., *May 11, 1927.*