OCT 8 1929
TO: LMAL

TECHNICAL NOTES

NATIONAL ADVISORY COMMITTEE FOR AERONAUTICS

No. 322

THE EFFECT OF THE WINGS OF SINGLE ENGINE AIRPLANES ON PROPULSIVE EFFICIENCY AS SHOWN BY FULL SCALE WIND TUNNEL TESTS

By Fred E. Weick and Donald H. Wood
Langley Memorial Aeronautical Laboratory

FILE COPY
To be returned to
the files of the Langley
Memorial Aeronautical
Laboratory

Washington
October, 1929

NASA Technical Library
3 1176 01431 9207

NATIONAL ADVISORY COMMITTEE FOR AERONAUTICS.

TECHNICAL NOTE NO. 322.

THE EFFECT OF THE WINGS OF SINGLE ENGINE AIRPLANES ON PROPULSIVE EFFICIENCY AS SHOWN BY FULL SCALE WIND TUNNEL TESTS.

By Fred E. Weick and Donald H. Wood.

Summary

An investigation was conducted in the Propeller Research Tunnel of the National Advisory Committee for Aeronautics at Langley Field, Virginia, to determine the effect of the wings on propulsive efficiency. An open cockpit single engine fuselage was tested with and without biplane wings and a closed cabin fuselage with varying amounts of cowling was tested with and without a monoplane wing. A standard metal propeller and "Whirlwind" engine were used. The wings are shown to cause a reduction of from 1 to 3 per cent in propulsive efficiency, which is about the same for the monoplane as for the biplane wings.

Introduction

Extensive model tests, conducted by many agencies, have furnished a great amount of data on propeller-body interference. In most of these tests the wings were left off and in consequence there are very little data on the interference between wings and propellers. In this investigation the propulsive efficiency of a standard metal propeller was obtained on a single engine cabin

fuselage with and without a monoplane wing, and also on an open cockpit fuselage with and without biplane wings. The propeller was tested at two pitch settings. The investigation was made in the Propeller Research Tunnel of the National Advisory Committee for Aeronautics at Langley Field, Virginia. A further investigation is now being conducted in which the interference of nacelles, propellers and wings is to be measured.

Methods and Apparatus

The Propeller Research Tunnel - its test equipment and methods - have been described in Reference 1. The standard procedure there described was followed in these tests.

The fuselages have been designated as Nos. 1, 2, 3, and 4, and are shown in Figures 1, 2, 3, and 4, respectively. The open cockpit No. 1 and the closed cabin No. 2 have the entire engine exposed. Closed cabin fuselage No. 3 has the engine partly cowled, while No. 4 has the same amount of cowling but with a spinner.

The wing used on all the cabin fuselages was of 12-foot span and 7-foot chord, with a thick section (Göttingen 387). The 12-foot span was deemed sufficient to extend outside of the propeller influence. A windshield to simulate that on an actual airplane was built into the leading edge above the fuselage. Tail surfaces were not used because earlier tests had shown their influence on propulsive efficiency to be negligible.

The wing is shown in place on fuselage No. 3 in Figure 5. In Figure 6, the wing has been removed. The wings for the open cockpit fuselage were standard VE-7 biplane wings. They are shown attached to fuselage No. 1 in Figure 7. This fuselage is shown without wings in Figure 8. The engine was a standard "Whirlwind" J-5 air-cooled radial.

The aluminum alloy propeller was of standard Navy form with detachable blades and 9 feet in diameter. It was supplied by the Bureau of Aeronautics of the Navy Department. Its dimensions are given in Figure 9 and its blade widths and thicknesses and the pitch distribution are shown in Figure 10. All tests were made at pitch angles of 15° and 23° at the 42-inch radius. It will be noted that there is a considerable washout of pitch toward the hub at these settings.

As detailed in Reference 1, the torque dynamometer measures all torque acting on the engine mounting. This measured torque includes a small torque due to the twist of the slipstream which acts on the exposed cylinders and special tests were made (Reference 2) to determine its magnitude. The results were applied as a correction (amounting to as much as 3 per cent in some cases) to the measured engine torque.

The resultant horizontal force of the propeller-body combination, which may be either a thrust or a drag, was measured on the regular balance (Reference 1). This resultant horizontal force R, is composed of three components, such that

$$R = T - (D + \Delta D)$$

or $$R = T - D - \Delta D \qquad (1)$$

where T = the thrust of the propeller while operating in front of the body (the tension in the propeller shaft).

D = the drag of the airplane alone (without propeller) at the same air velocity and density.

ΔD = the increase in drag of the airplane with propeller, due to the slipstream.

To obtain the propulsive efficiency, which includes the propeller-body interference, an effective thrust is used, defined as

$$\text{Effective thrust} = T - \Delta D$$

or $$\text{from (1)} = R + D.$$

The propulsive efficiency η, then, is the ratio of the useful power to the input power, or

$$\eta = \frac{\text{Effective thrust} \times \text{velocity of advance}}{\text{Input power}}.$$

This propulsive efficiency includes the increase in drag of all parts of the airplane affected by the slipstream, and also the effect of the body interference on the propeller thrust and power.

Results

The results have been reduced to the standard nondimensional coefficients

$$C_T = \frac{\text{Effective thrust}}{\rho\ n^2\ D^4}$$

$$C_P = \frac{\text{Input power}}{\rho\ n^3\ D^5}$$

$$\eta = \frac{\text{Effective thrust} \times \text{velocity of advance}}{\text{Input power}}$$

where D = propeller diameter, and n = revolutions per unit of time.

Curves of these coefficients for fuselage No. 1 are given in Figures 11 to 14, with experimental points marked. These are typical of all the results. In Figures 15 to 26, the final curves have been drawn for all the tests with curves for the tests with wing and without wing on the same sheet. The curves were obtained by fairing through the experimental points, as in Figures 11 to 14. The final adjusted coefficients taken from these curves are given in Tables I to VIII.

From inspection of the comparative curves, it is noted that the propulsive efficiency with the wing in place is from 1 to 3 per cent lower than without the wing. The reduction in efficiency is slightly greater for the high-pitch setting.

The monoplane wing causes about the same reduction in efficiency as the biplane wings.

The wing seems to cause a small increase in aerodynamic pitch as well as an increase in the thrust and power coefficients. At the $\frac{V}{n\,D}$ for maximum efficiency the effect is mainly an increase in power coefficient.

Conclusions

1. The monoplane and biplane wings tested with cabin and open cockpit fuselages caused a reduction in propulsive efficiency of from 1 to 3 per cent.

2. The loss in efficiency was slightly greater at high pitch settings.

3. About the same loss was caused by the monoplane wing as by the biplane wings.

Langley Memorial Aeronautical Laboratory,
National Advisory Committee for Aeronautics,
Langley Field, Va., August 8, 1929.

References

1. Weick, Fred E. and Wood, Donald H. : The Twenty-Foot Propeller Research Tunnel of the National Advisory Committee for Aeronautics. N.A.C.A. Technical Report No. 300 (1928).

2. Weick, Fred E. : Drag and Cooling of Various Forms of Cowling for a "Whirlwind" Engine on a Cabin Fuselage. N.A.C.A. Technical Report No. 313 (1929).

TABLE I.

Final Adjusted Coefficients

Fuselage No. 1 - with wing

Propeller No. 4412
15° at 42 in.

$\frac{V}{n\ D}$	C_T	C_P	η
.10	.0849	.0361	.235
.15	.0811	.0361	.337
.20	.0772	.0361	.428
.25	.0730	.0360	.506
.30	.0682	.0360	.569
.35	.0635	.0355	.625
.40	.0581	.0349	.665
.45	.0530	.0338	.705
.50	.0472	.0320	.738
.55	.0412	.0298	.760
.60	.0347	.0271	.768
.65	.0280	.0240	.759
.70	.0215	.0203	.740
.75	.0151	.0168	.674
.80	.0083	.0127	.522
.85	.0019	.0083	.195

TABLE I (Cont.)

Final Adjusted Coefficients

Fuselage No. 1 - with wing

Propeller No. 4412

23° at 42 in.

$\frac{V}{n\ D}$	C_T	C_P	η
.10	.0941	.0650	.145
.15	.0942	.0650	.218
.20	.0941	.0650	.290
.25	.0940	.0650	.362
.30	.0938	.0650	.433
.35	.0930	.0650	.500
.40	.0921	.0649	.567
.45	.0901	.0649	.625
.50	.0872	.0648	.673
.55	.0830	.0645	.706
.60	.0781	.0638	.735
.65	.0730	.0625	.759
.70	.0670	.0605	.775
.75	.0612	.0581	.789
.80	.0542	.0545	.795
.85	.0492	.0523	.800
.90	.0433	.0488	.798
.95	.0374	.0448	.794
1.00	.0306	.0401	.786
1.05	.0258	.0351	.771
1.10	.0201	.0299	.740
1.15	.0141	.0240	.675
1.20	.0080	.0180	.540

TABLE II

Final Adjusted Coefficients

Fuselage No. 1 - without wing

Propeller No. 4412

15° at 42 in.

$\frac{V}{n\ D}$	C_T	C_P	η
.10	.0869	.0362	.240
.15	.0830	.0362	.344
.20	.0790	.0362	.436
.25	.0742	.0362	.516
.30	.0695	.0360	.580
.35	.0642	.0356	.631
.40	.0591	.0349	.677
.45	.0539	.0336	.721
.50	.0479	.0319	.750
.55	.0410	.0293	.770
.60	.0342	.0264	.778
.65	.0272	.0230	.768
.70	.0208	.0197	.739
.75	.0135	.0153	.663
.80	.0068	.0113	.480

TABLE II (Cont.)

Final Adjusted Coefficients

Fuselage No. 1 - without wing

Propeller No. 4412

23° at 42 in.

$\frac{V}{n\,D}$	C_T	C_P	η
.10	.0950	.0651	.146
.15	.0950	.0652	.218
.20	.0950	.0652	.292
.25	.0947	.0651	.364
.30	.0942	.0650	.435
.35	.0939	.0650	.505
.40	.0928	.0650	.570
.45	.0910	.0648	.632
.50	.0880	.0643	.685
.55	.0841	.0642	.720
.60	.0791	.0639	.744
.65	.0739	.0623	.770
.70	.0680	.0604	.789
.75	.0619	.0580	.800
.80	.0555	.0558	.810
.85	.0490	.0512	.815
.90	.0430	.0475	.813
.95	.0368	.0431	.810
1.00	.0308	.0385	.800
1.05	.0248	.0335	.776
1.10	.0186	.0280	.739
1.15	.0120	.0216	.640
1.20	.0059	.0151	.470

TABLE III

Final Adjusted Coefficients

Fuselage No. 2 - with wing

Propeller No. 4412

15° at 42 in.

$\frac{V}{n\ D}$	C_T	C_P	η
.10	.0861	.0360	.239
.15	.0822	.0362	.341
.20	.0782	.0366	.427
.25	.0738	.0369	.500
.30	.0690	.0365	.567
.35	.0640	.0360	.622
.40	.0586	.0350	.670
.45	.0531	.0338	.710
.50	.0474	.0320	.740
.55	.0411	.0298	.760
.60	.0349	.0272	.770
.65	.0286	.0242	.769
.70	.0224	.0210	.746
.75	.0160	.0174	.690
.80	.0103	.0138	.595
.85	.0043	.0100	.365

TABLE III (Cont.)

Final Adjusted Coefficients

Fuselage No. 2 - with wing

Propeller No. 4412

23° at 42 in.

$\frac{V}{n\ D}$	C_T	C_P	η
.10	.0930	.0649	.143
.15	.0939	.0654	.216
.20	.0941	.0660	.286
.25	.0942	.0662	.356
.30	.0938	.0664	.424
.35	.0924	.0666	.485
.40	.0909	.0664	.548
.45	.0882	.0661	.600
.50	.0854	.0656	.650
.55	.0818	.0650	.692
.60	.0773	.0640	.725
.65	.0727	.0629	.753
.70	.0674	.0610	.774
.75	.0623	.0590	.793
.80	.0574	.0566	.811
.85	.0521	.0539	.822
.90	.0467	.0506	.830
.95	.0408	.0465	.833
1.00	.0347	.0409	.829
1.05	.0287	.0370	.816
1.10	.0228	.0316	.793
1.15	.0170	.0258	.758
1.20	.0109	.0197	.663
1.25	.0050	.0133	.470

TABLE IV

Final Adjusted Coefficients

Fuselage No. 2 - without wing

Propeller No. 4412

15° at 42 in.

$\frac{V}{n\ D}$	C_T	C_P	η
.10	.0860	.0341	.252
.15	.0828	.0348	.356
.20	.0785	.0350	.448
.25	.0740	.0352	.525
.30	.0694	.0350	.595
.35	.0645	.0349	.645
.40	.0590	.0342	.690
.45	.0534	.0333	.721
.50	.0478	.0319	.749
.55	.0416	.0298	.770
.60	.0353	.0271	.782
.65	.0291	.0242	.782
.70	.0228	.0210	.757
.75	.0162	.0176	.690
.80	.0097	.0135	.575
.85	.0030	.0091	.280

TABLE IV (Cont.)

Final Adjusted Coefficients

Fuselage No. 2 - without wing

Propeller No. 4412

23° at 42 in.

$\frac{V}{n\ D}$	C_T	C_P	η
.10	.0958	.0668	.144
.15	.0954	.0666	.214
.20	.0949	.0664	.286
.25	.0942	.0664	.355
.30	.0931	.0661	.422
.35	.0920	.0660	.489
.40	.0906	.0660	.550
.45	.0886	.0658	.607
.50	.0861	.0652	.660
.55	.0830	.0650	.702
.60	.0792	.0644	.738
.65	.0750	.0636	.765
.70	.0699	.0619	.790
.75	.0641	.0595	.808
.80	.0581	.0566	.820
.85	.0519	.0530	.831
.90	.0454	.0486	.839
.95	.0388	.0439	.840
1.00	.0325	.0388	.837
1.05	.0264	.0339	.820
1.10	.0204	.0284	.790
1.15	.0147	.0231	.730
1.20	.0087	.0173	.615
1.25	.0035	.0114	.380

TABLE V.

Final Adjusted Coefficients

Fuselage No. 3 - with wing

Propeller No. 4412

15° at 42 in.

$\frac{V}{n\ D}$	C_T	C_P	η
.10	.0856	.0352	.243
.15	.0819	.0358	.343
.20	.0777	.0360	.432
.25	.0731	.0360	.509
.30	.0686	.0361	.570
.35	.0638	.0356	.626
.40	.0587	.0350	.670
.45	.0536	.0340	.710
.50	.0481	.0327	.735
.55	.0426	.0309	.758
.60	.0370	.0288	.770
.65	.0308	.0260	.770
.70	.0248	.0230	.755
.75	.0188	.0199	.707
.80	.0123	.0160	.613
.85	.0061	.0119	.435

TABLE V (Cont.)

Final Adjusted Coefficients

Fuselage No. 3 - with wing

Propeller No. 4412

23° at 42 in.

$\frac{V}{n\ D}$	C_T	C_P	η
.10	.0954	.0681	.1400
.15	.0960	.0684	.2090
.20	.0960	.0688	.2790
.25	.0958	.0690	.3470
.30	.0950	.0690	.4130
.35	.0938	.0690	.4760
.40	.0921	.0690	.5340
.45	.0898	.0687	.5880
.50	.0871	.0684	.6370
.55	.0838	.0681	.6780
.60	.0796	.0672	.7100
.65	.0749	.0657	.7410
.70	.0699	.0640	.7630
.75	.0643	.0618	.7800
.80	.0592	.0593	.7980
.85	.0534	.0563	.8040
.90	.0477	.0530	.8100
.95	.0425	.0498	.8100
1.00	.0370	.0458	.8060
1.05	.0318	.0417	.8000
1.10	.0264	.0369	.7880
1.15	.0206	.0311	.7600
1.20	.0150	.0257	.7000
1.25	.0084	.0186	.5650
1.30	.0023	.0120	.2500
1.32	.0000	.0080	.0000

TABLE VI.

Final Adjusted Coefficients

Fuselage No. 3 - without wing

Propeller No. 4412

15° at 42 in.

$\frac{V}{n\ D}$	C_T	C_P	η
.10	.0864	.0352	.245
.15	.0829	.0357	.348
.20	.0789	.0360	.438
.25	.0734	.0360	.510
.30	.0697	.0359	.583
.35	.0642	.0353	.636
.40	.0591	.0349	.677
.45	.0538	.0339	.714
.50	.0476	.0322	.740
.55	.0419	.0302	.762
.60	.0359	.0276	.778
.65	.0297	.0248	.779
.70	.0228	.0212	.751
.75	.0257	.0177	.696
.80	.0101	.0139	.580
.85	.0040	.0100	.340

TABLE VI (Cont.)

Final Adjusted Coefficients

Fuselage No. 3 - without wing

Propeller No. 4412

23° at 42 in.

$\frac{V}{n\ D}$	C_T	C_P	η
.10	.0960	.0676	.142
.15	.0960	.0678	.213
.20	.0959	.0678	.283
.25	.0952	.0676	.352
.30	.0945	.0674	.421
.35	.0932	.0673	.484
.40	.0916	.0671	.546
.45	.0895	.0670	.600
.50	.0869	.0668	.651
.55	.0833	.0662	.692
.60	.0792	.0658	.722
.65	.0746	.0644	.753
.70	.0691	.0627	.771
.75	.0635	.0602	.792
.80	.0577	.0572	.807
.85	.0519	.0539	.818
.90	.0460	.0500	.827
.95	.0400	.0459	.829
1.00	.0340	.0412	.823
1.05	.0281	.0364	.810
1.10	.0220	.0310	.780
1.15	.0164	.0258	.732
1.20	.0106	.0202	.630
1.25	.0045	.0140	.402

TABLE VII

Final Adjusted Coefficients

Fuselage No. 4 - with wing

Propeller No. 4412

15° at 42 in.

$\frac{V}{n\ D}$	C_T	C_P	η
.10	.0861	.0350	.246
.15	.0821	.0356	.347
.20	.0779	.0359	.434
.25	.0732	.0360	.509
.30	.0683	.0359	.570
.35	.0620	.0354	.623
.40	.0580	.0349	.665
.45	.0524	.0338	.699
.50	.0470	.0322	.730
.55	.0412	.0301	.752
.60	.0356	.0278	.769
.65	.0296	.0249	.766
.70	.0229	.0215	.745
.75	.0169	.0180	.702
.80	.0111	.0145	.613
.85	.0050	.0105	.405

TABLE VII (Cont.)

Final Adjusted Coefficients

Fuselage No. 4 - with wing

Propeller No. 4412

23° at 42 in.

$\frac{V}{n\ D}$	C_T	C_P	η
.10	.0941	.0672	.140
.15	.0948	.0674	.211
.20	.0950	.0678	.280
.25	.0949	.0679	.350
.30	.0944	.0679	.416
.35	.0936	.0680	.481
.40	.0920	.0679	.541
.45	.0900	.0676	.598
.50	.0872	.0671	.649
.55	.0838	.0667	.690
.60	.0794	.0660	.720
.65	.0745	.0648	.746
.70	.0692	.0640	.768
.75	.0640	.0610	.788
.80	.0582	.0582	.800
.85	.0525	.0552	.809
.90	.0470	.0521	.810
.95	.0415	.0488	.809
1.00	.0359	.0449	.800
1.05	.0302	.0401	.790
1.10	.0248	.0353	.773
1.15	.0188	.0296	.735
1.20	.0130	.0234	.665
1.25	.0070	.0170	.515

TABLE VIII.

Final Adjusted Coefficients

Fuselage No. 4 - without wing.

Propeller No. 4412

15° at 42 in.

$\frac{V}{n\ D}$	C_T	C_P	η
.10	.0869	.0354	.246
.15	.0830	.0358	.347
.20	.0789	.0360	.438
.25	.0742	.0360	.515
.30	.0692	.0359	.578
.35	.0641	.0352	.638
.40	.0586	.0346	.679
.45	.0541	.0336	.712
.50	.0475	.0320	.741
.55	.0417	.0301	.762
.60	.0355	.0274	.777
.65	.0291	.0243	.777
.70	.0225	.0210	.750
.75	.0161	.0174	.691
.80	.0101	.0140	.575
.85	.0040	.0100	.340

TABLE VIII (Cont.)

Final Adjusted Coefficients

Fuselage No. 4 - without wing

Propeller No. 4412

23° at 42 in.

$\frac{V}{n\ D}$	C_T	C_P	η
.10	.0941	.0662	.142
.15	.0944	.0663	.214
.20	.0945	.0665	.284
.25	.0941	.0666	.353
.30	.0938	.0667	.422
.35	.0929	.0665	.489
.40	.0911	.0664	.549
.45	.0891	.0661	.606
.50	.0869	.0660	.659
.55	.0835	.0658	.698
.60	.0794	.0651	.730
.65	.0748	.0646	.752
.70	.0698	.0630	.776
.75	.0639	.0602	.795
.80	.0579	.0571	.809
.85	.0521	.0540	.820
.90	.0460	.0500	.829
.95	.0400	.0457	.830
1.00	.0342	.0412	.828
1.05	.0285	.0366	.818
1.10	.0228	.0318	.786
1.15	.0165	.0260	.730
1.20	.0105	.0200	.630
1.25	.0043	.0140	.380

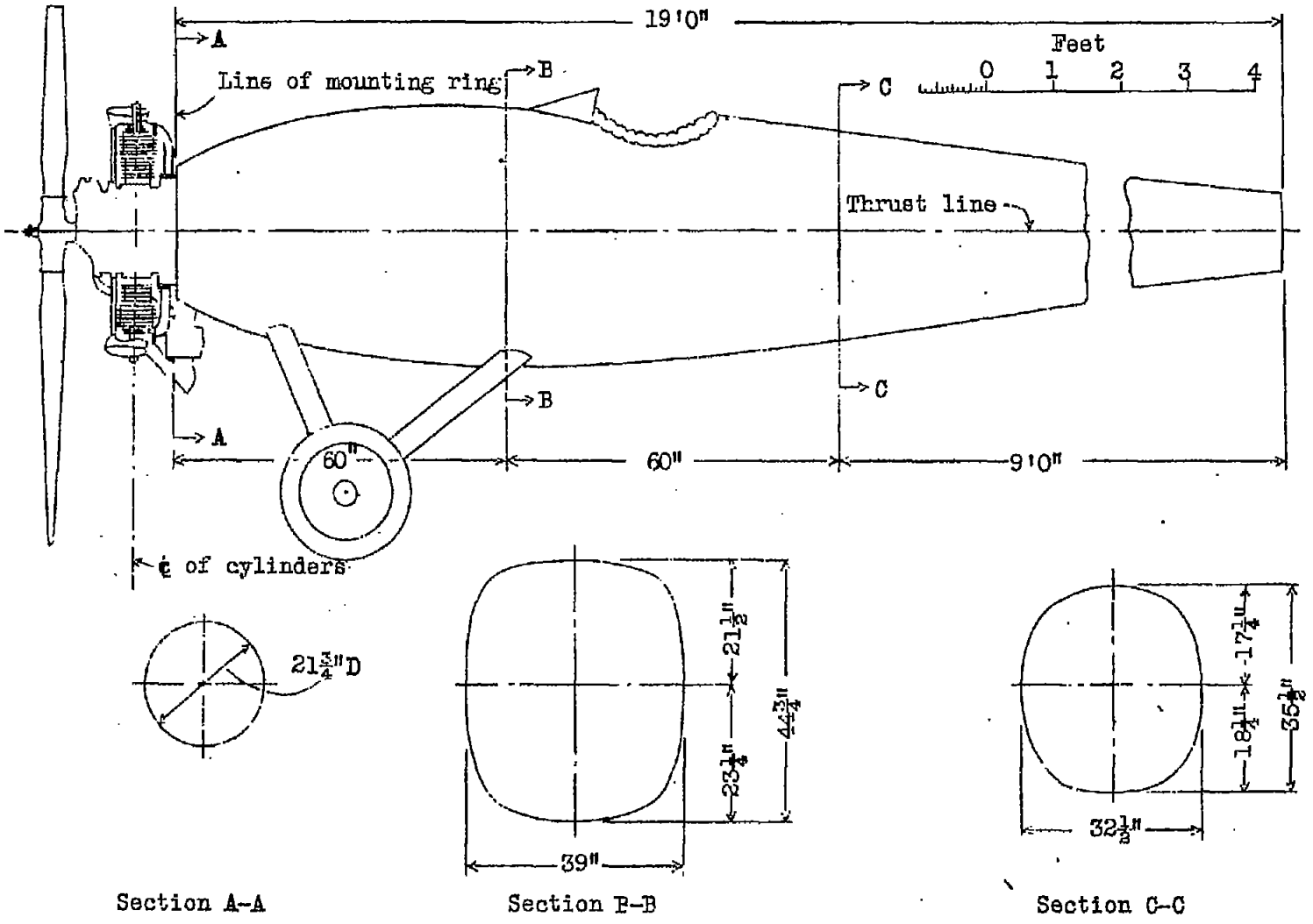

Fig.1 Fuselage No.1

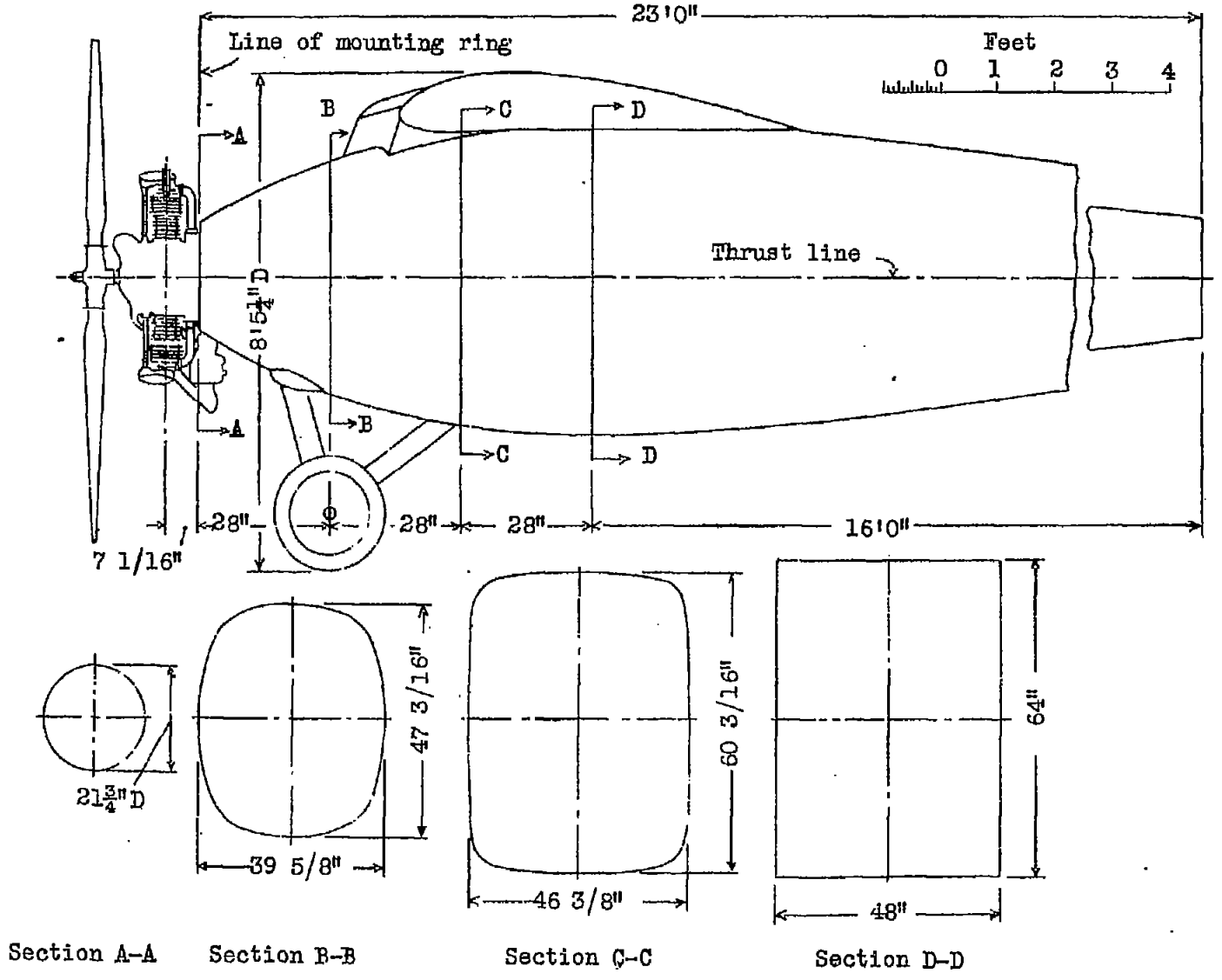

Fig.2 Fuselage No.2

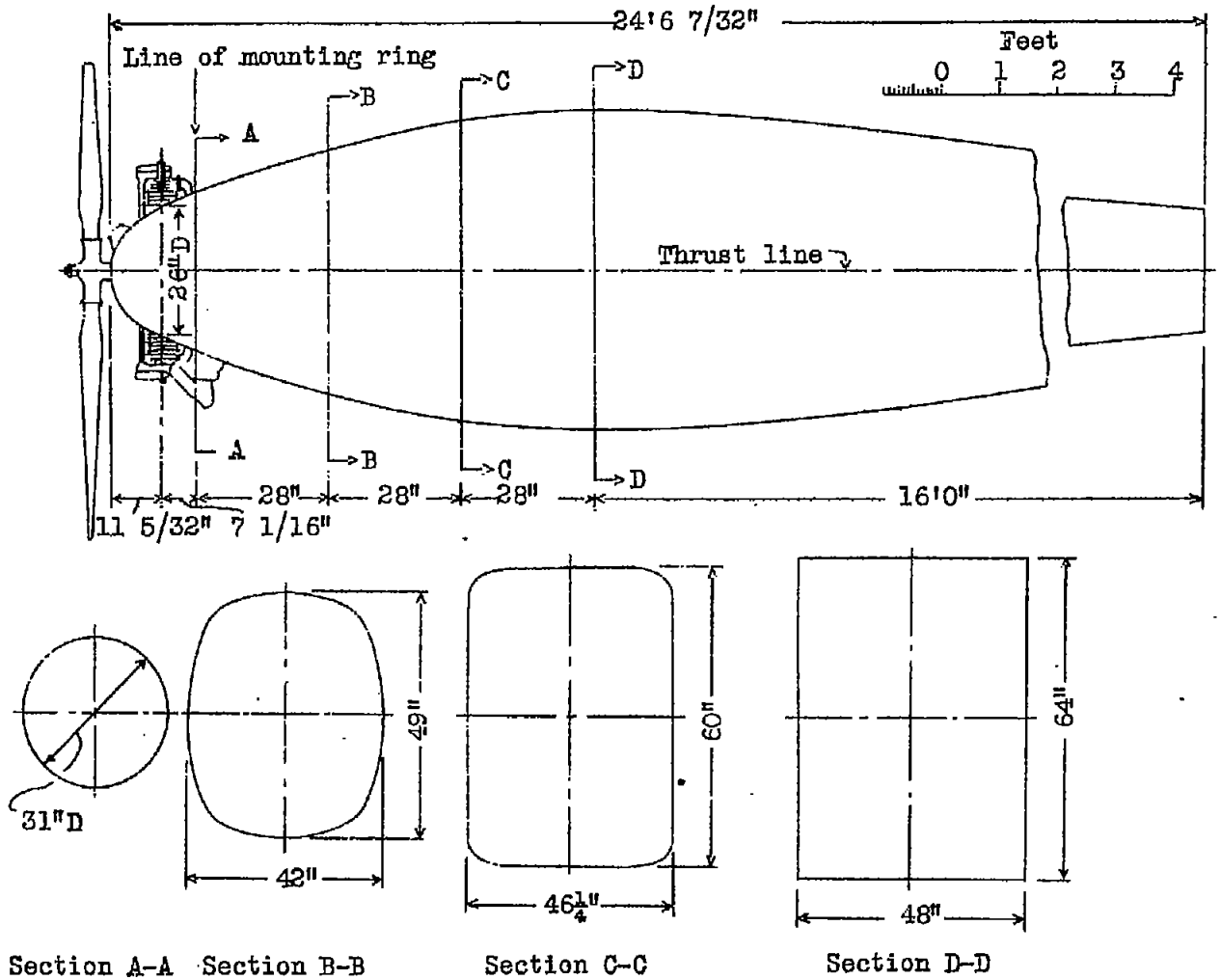

Fig.3 Fuselage No.3

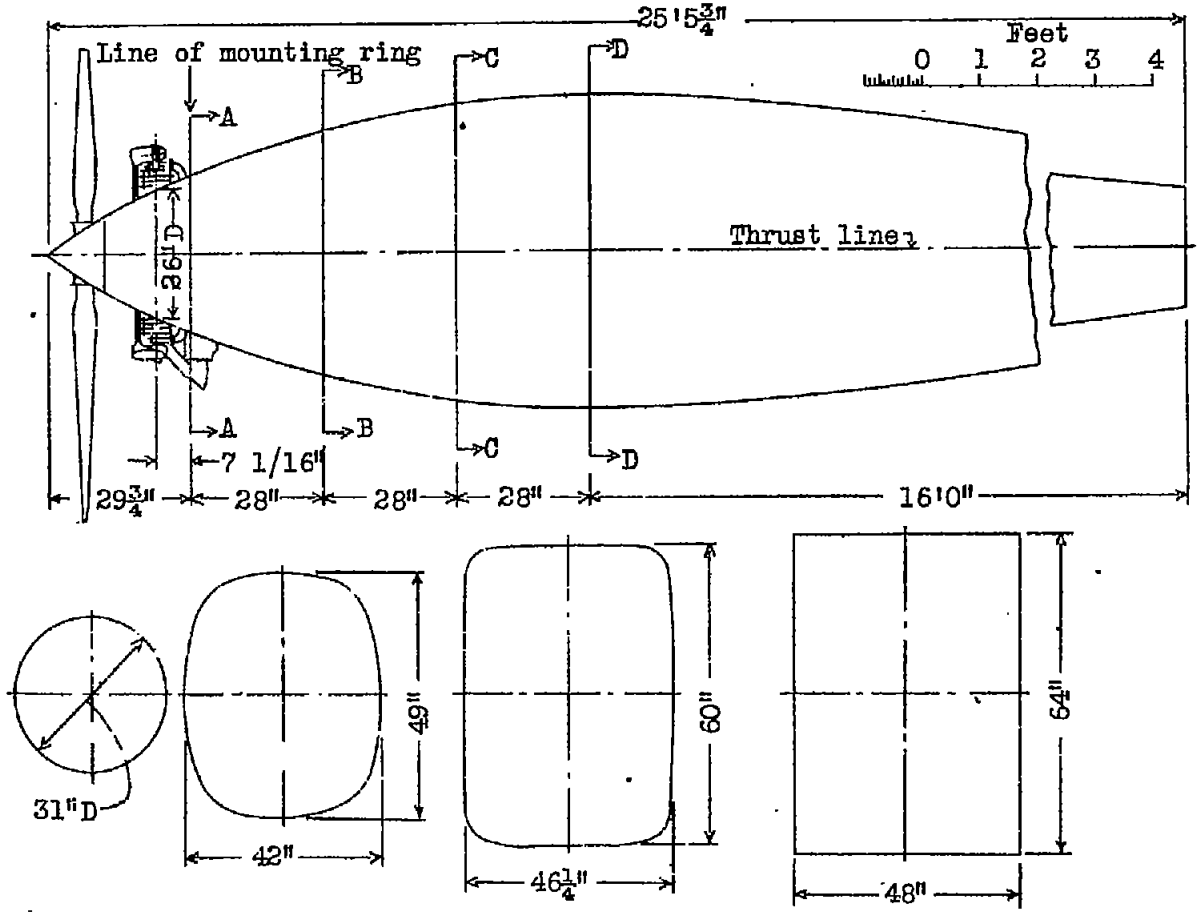

Fig.4 Fuselage No.4

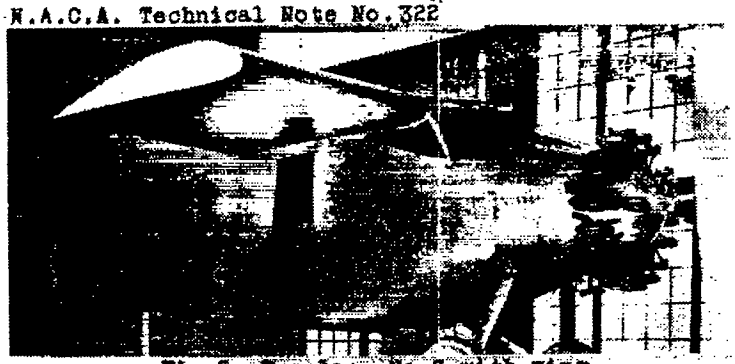

Fig.5 Fuselage No.3 with wing

Fig.6 Fuselage No.3 without wing

Fig.8 Fuselage No.1 without wings

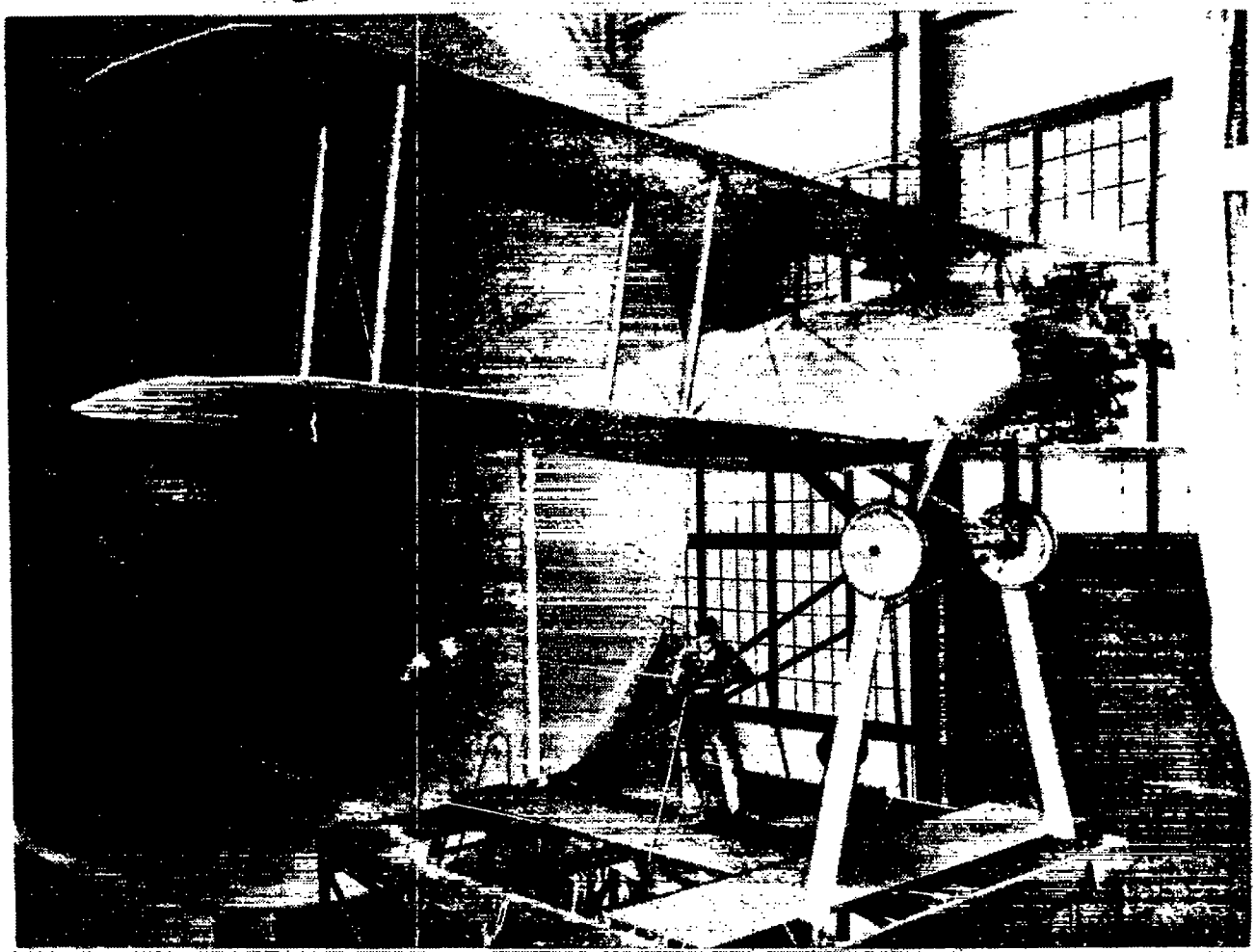

Fig.7 Fuselage No.1 with wings

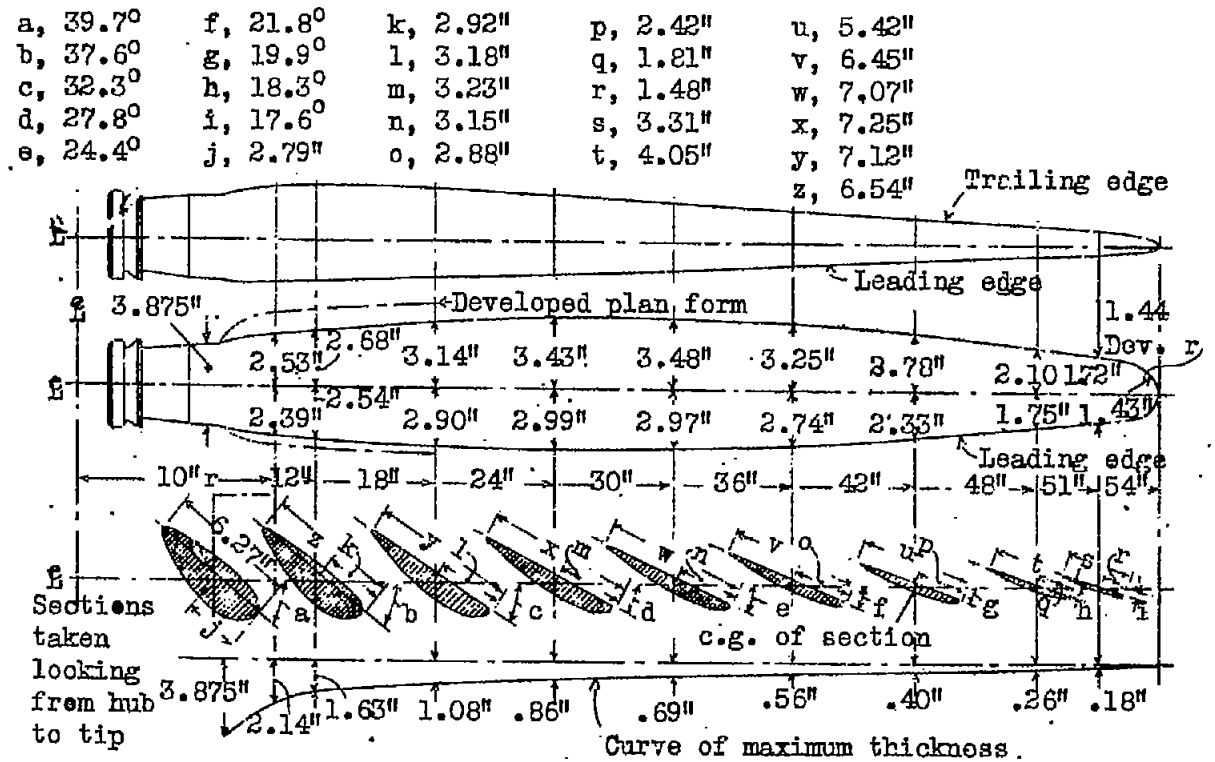

Fig.31 Metal propeller blade, 9 ft. diameter, right hand. Navy Dept. Bureau of Aeronautics. Propeller No.4412

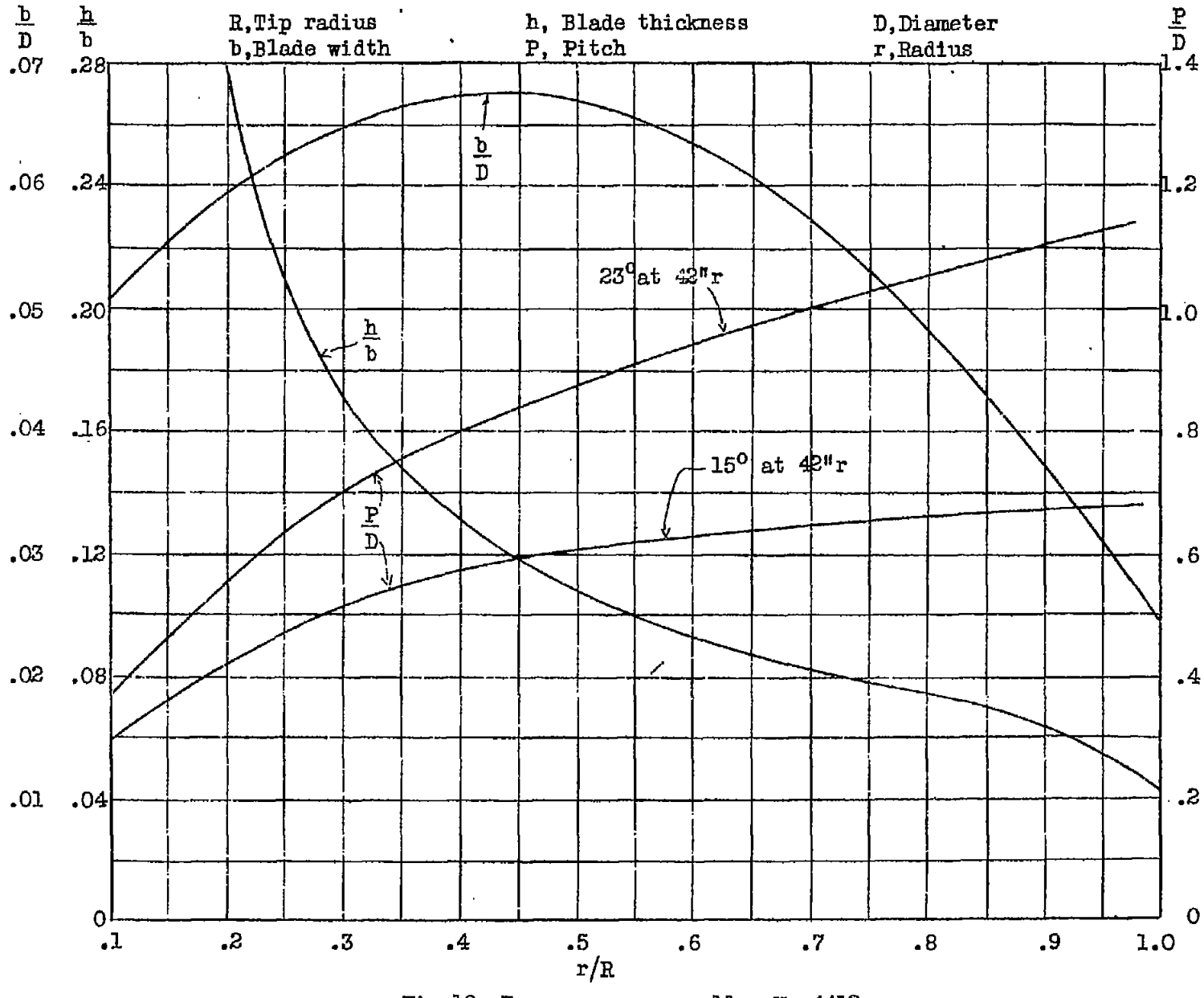

Fig.10 Form curves,propeller No.4412

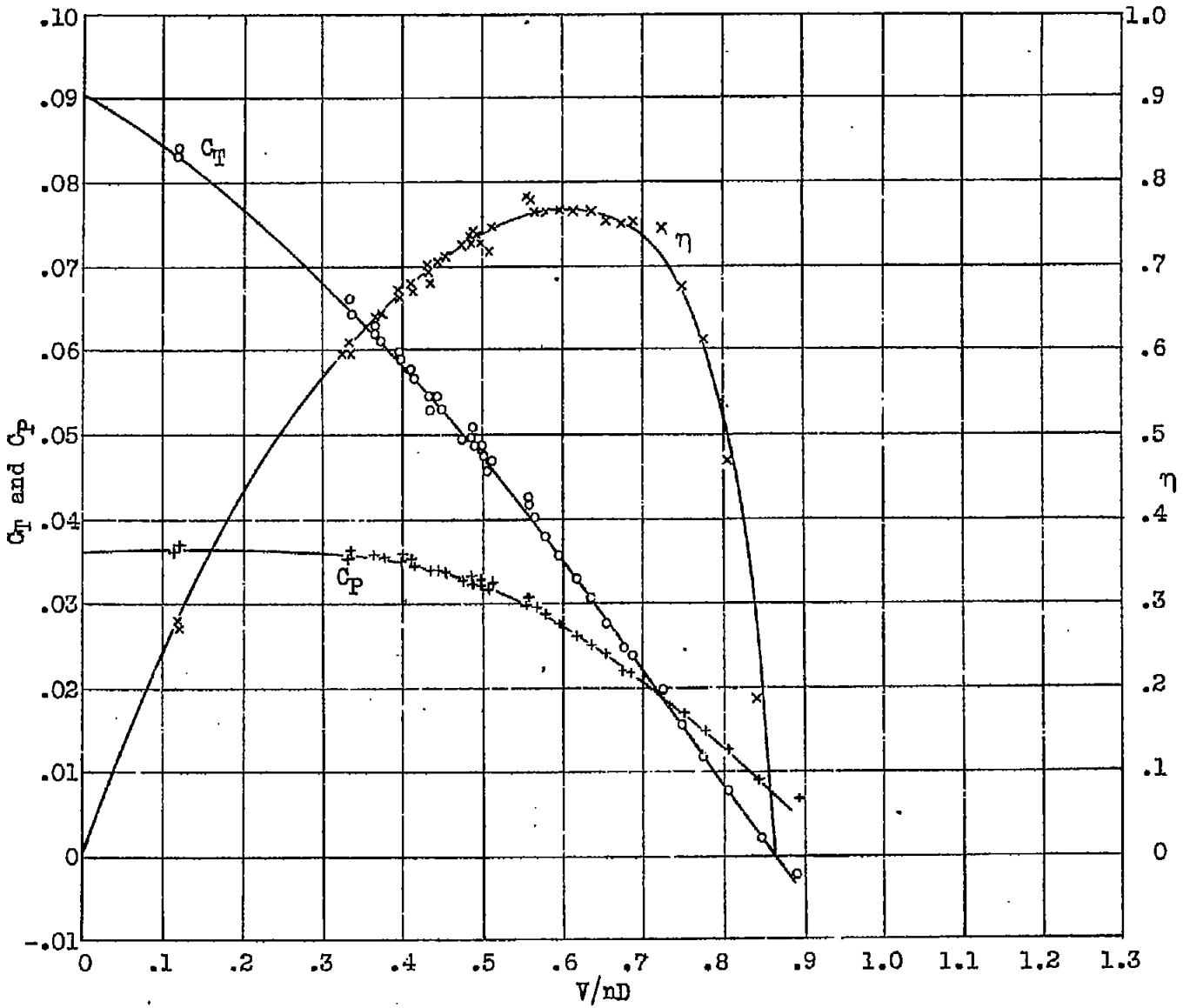

Fig.11 Propeller No.4412 (15° at 42") on fuselage No.1 with wing.

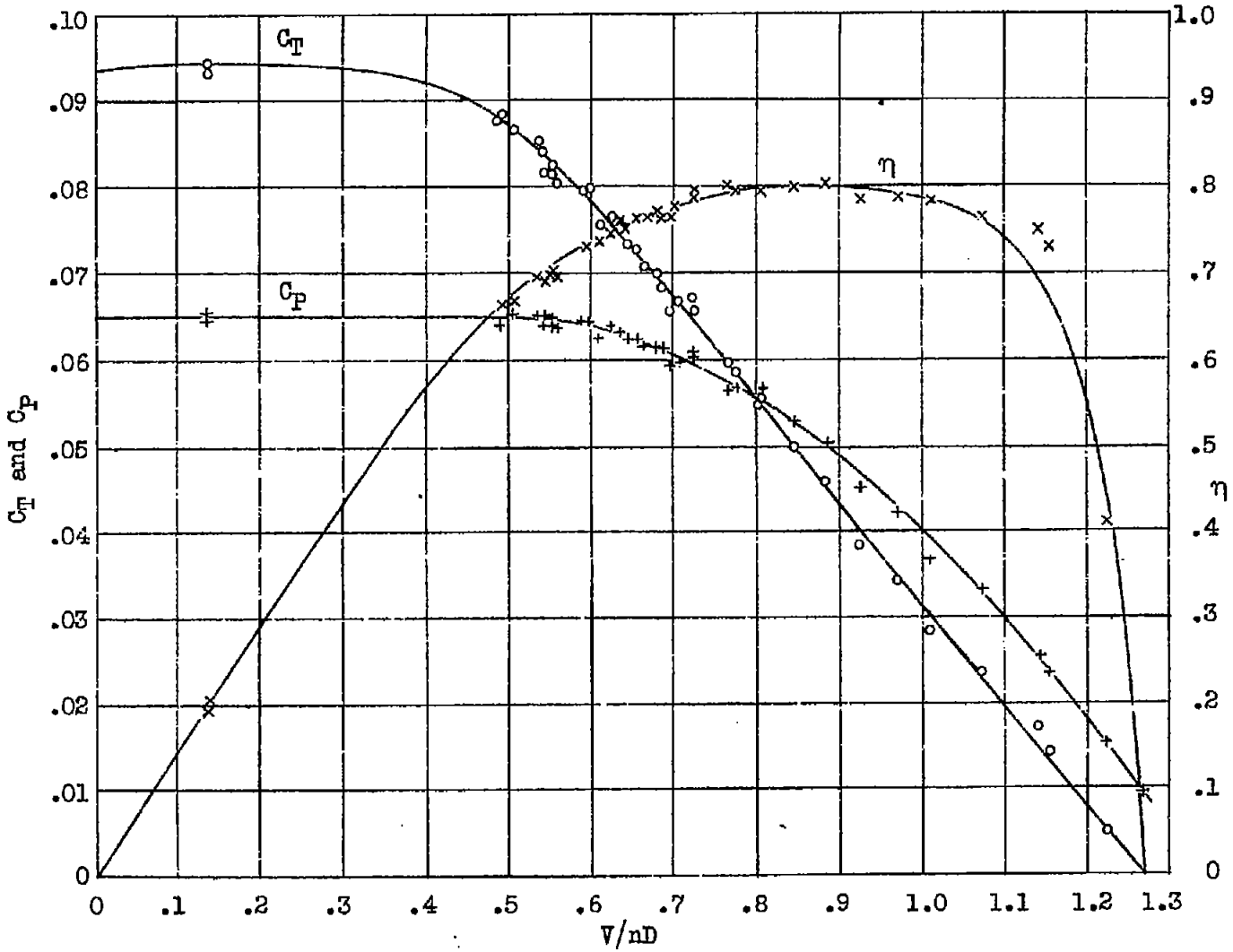

Fig.12 Propeller No.4412 (23° at 42") on fuselage No.1 with wing.

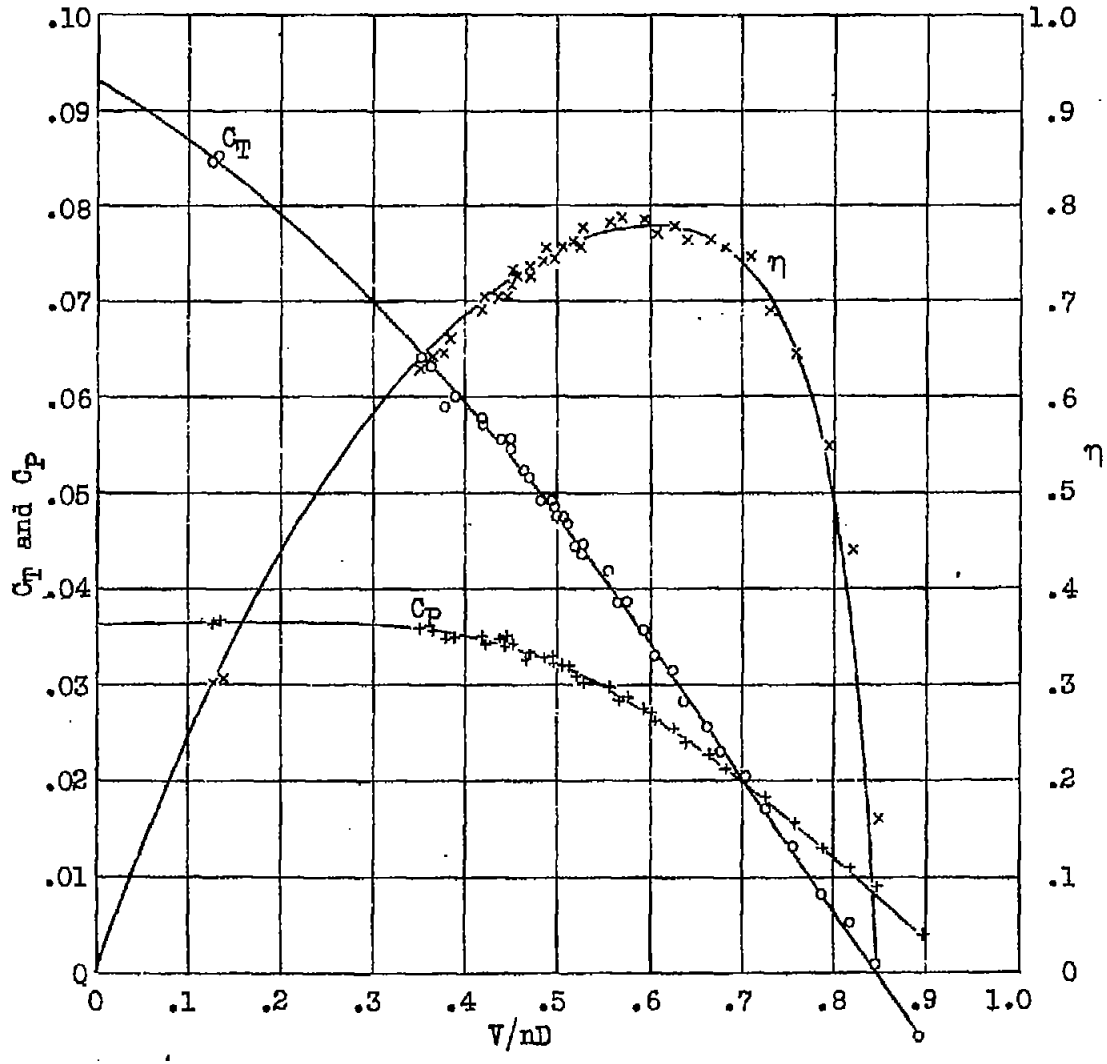

Fig.13 Propeller No.4412 (15° at 42") on fuselage No.1 without wing.

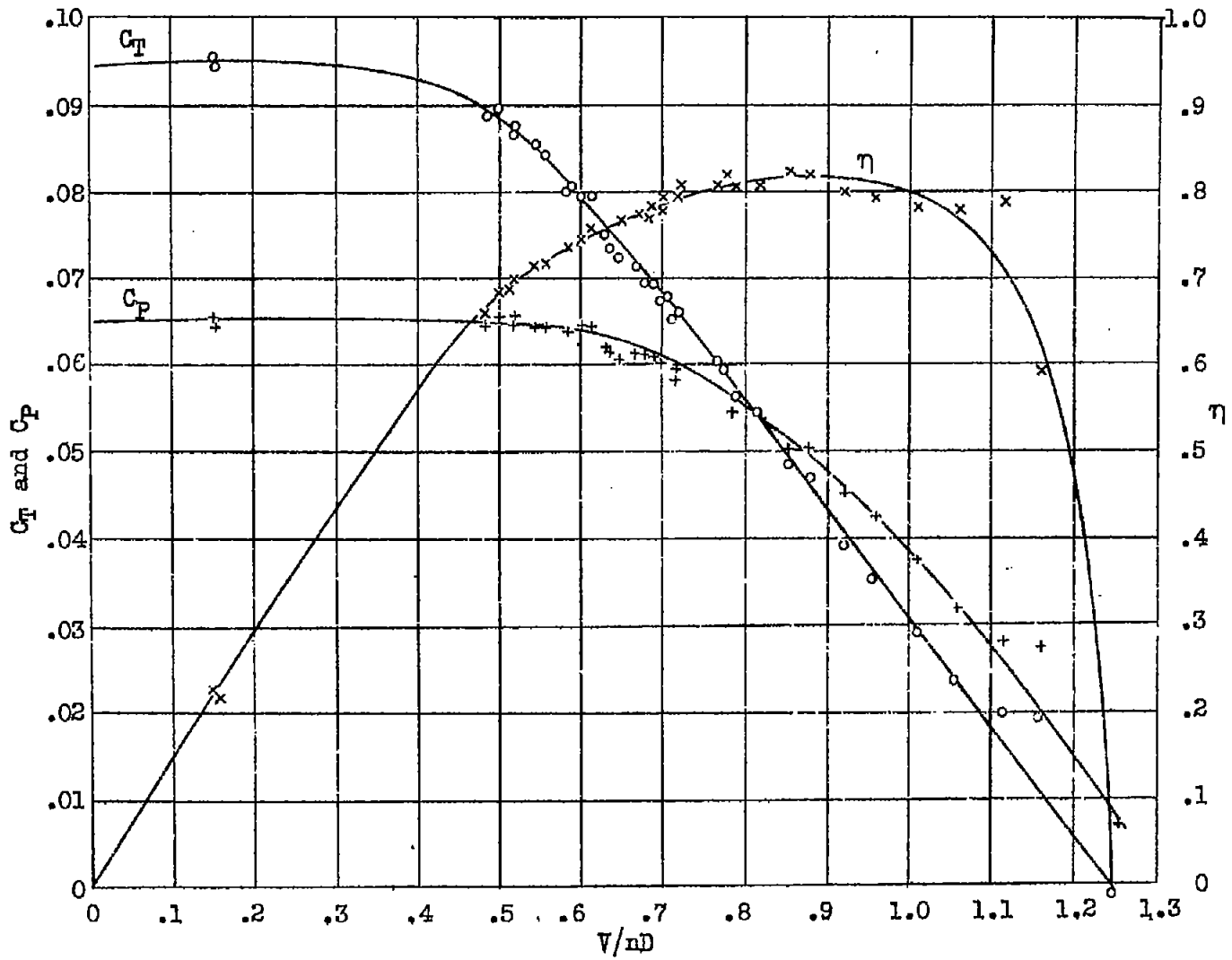

Fig.14 Propeller No. 4412 (23° at 42") on fuselage No.1 without wing.

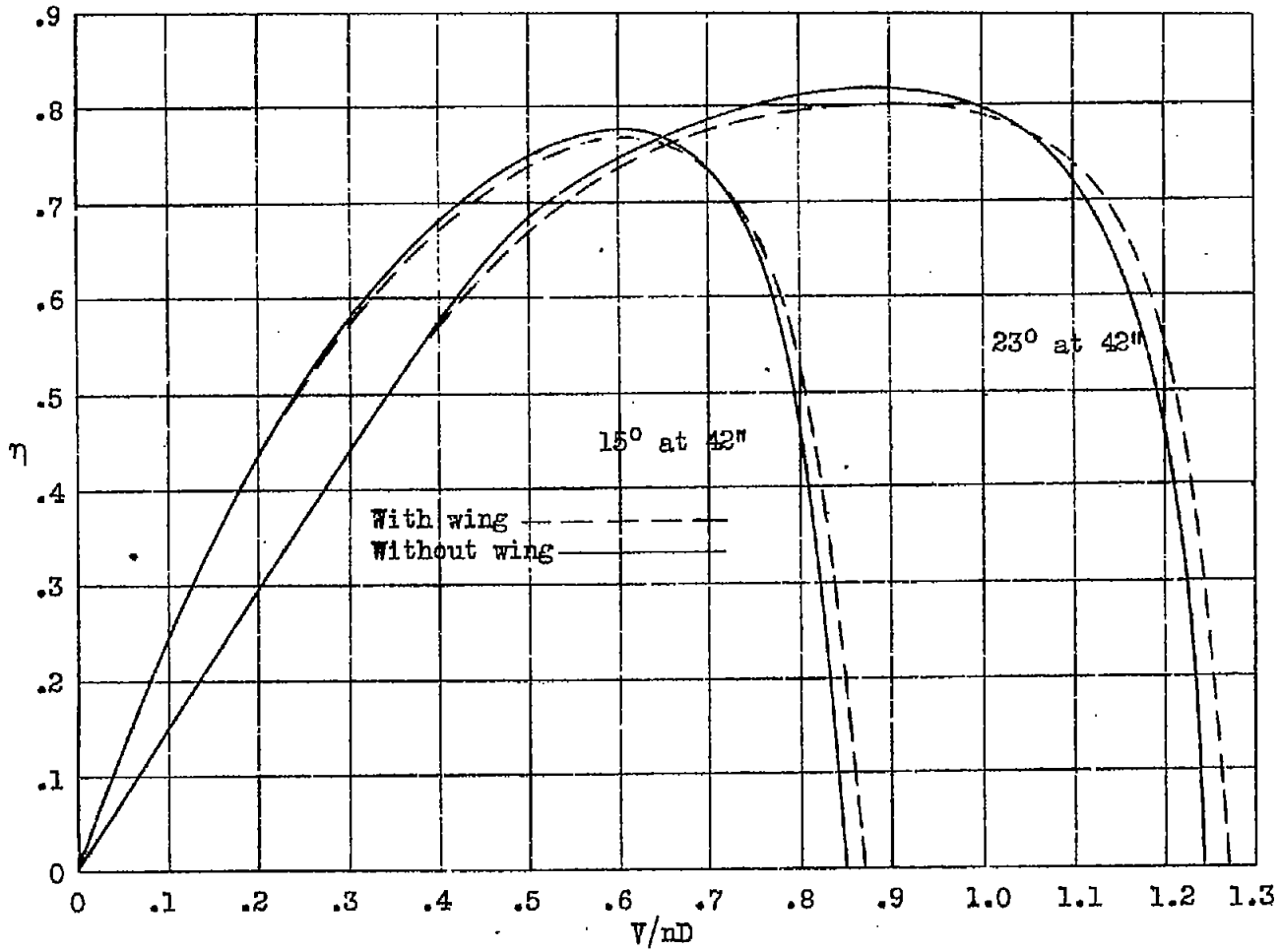

Fig.15 Propeller No.4412 on fuselage No.1

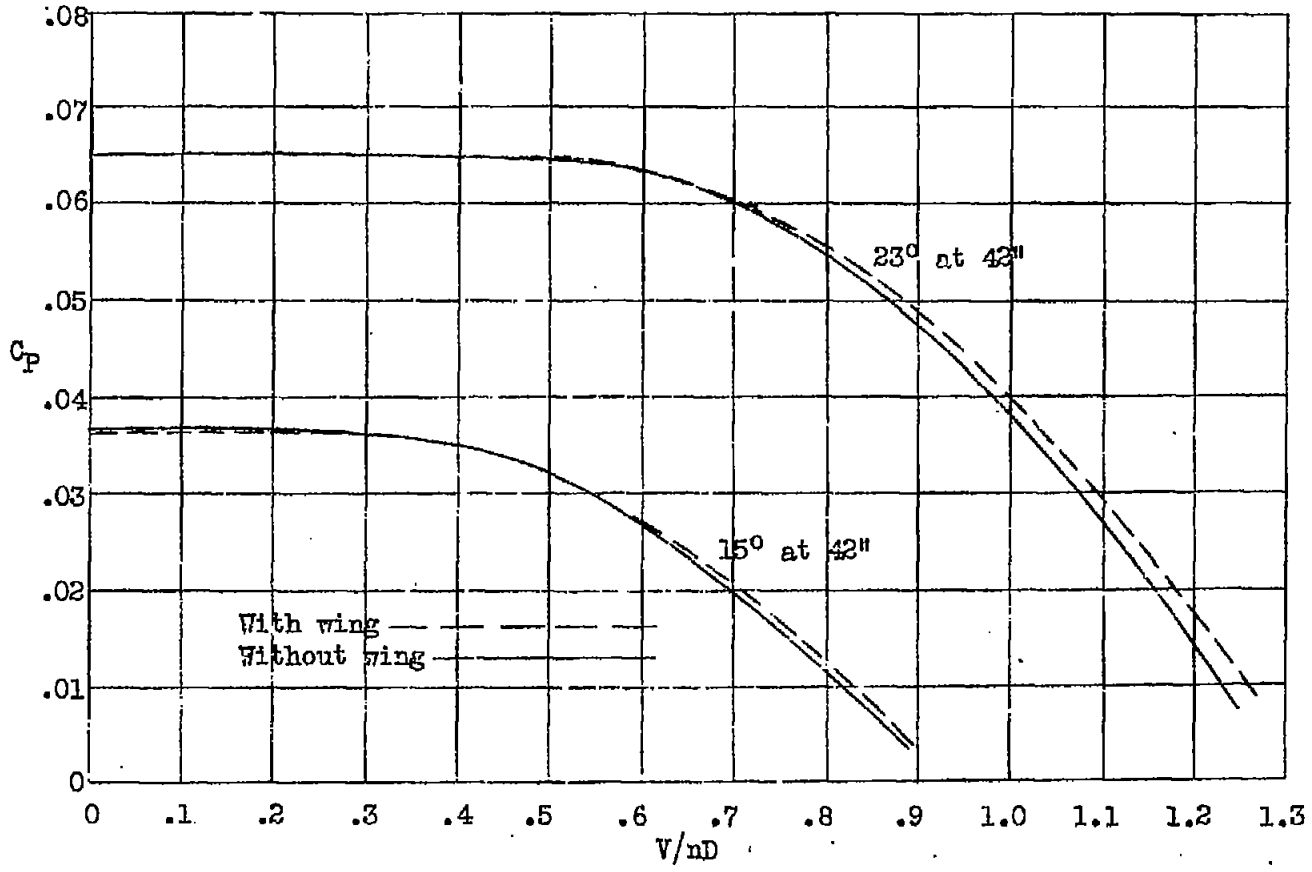

Fig.16 Propeller No.4412 on fuselage No.1

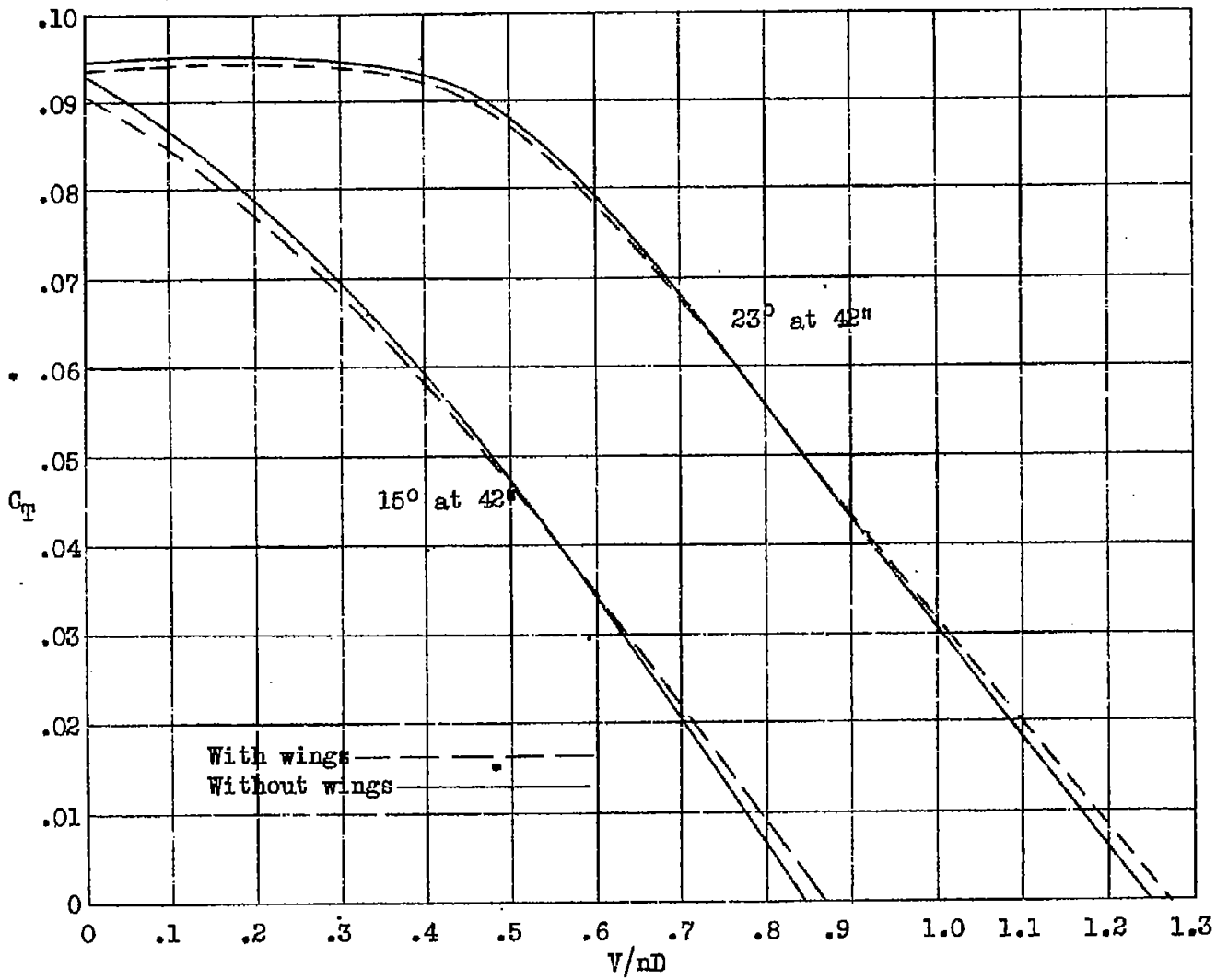

Fig.17 Propeller No.4412 on fuselage No.1

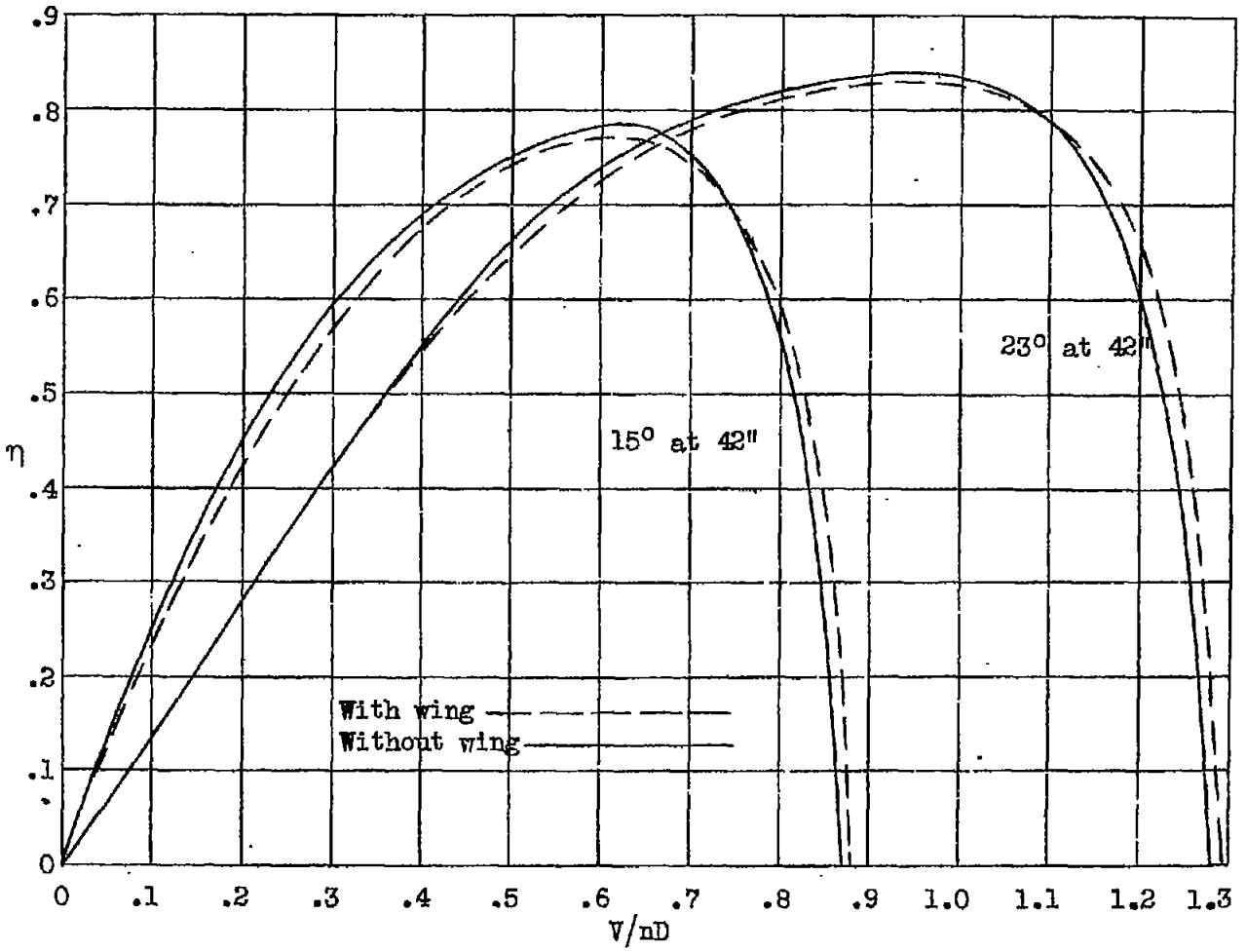

Fig.18 Propeller No.4412 on fuselage No.2

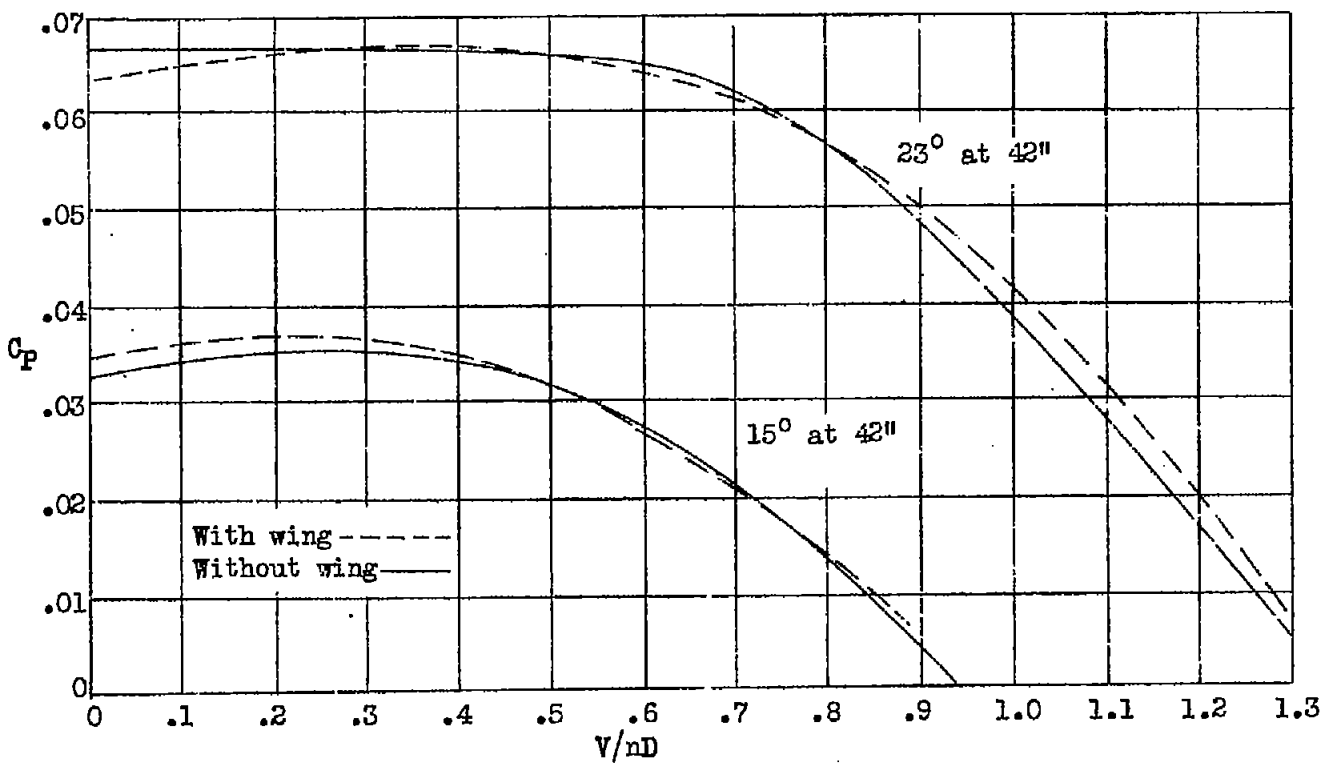

Fig.19 Propeller No.4412 on fuselage No.2

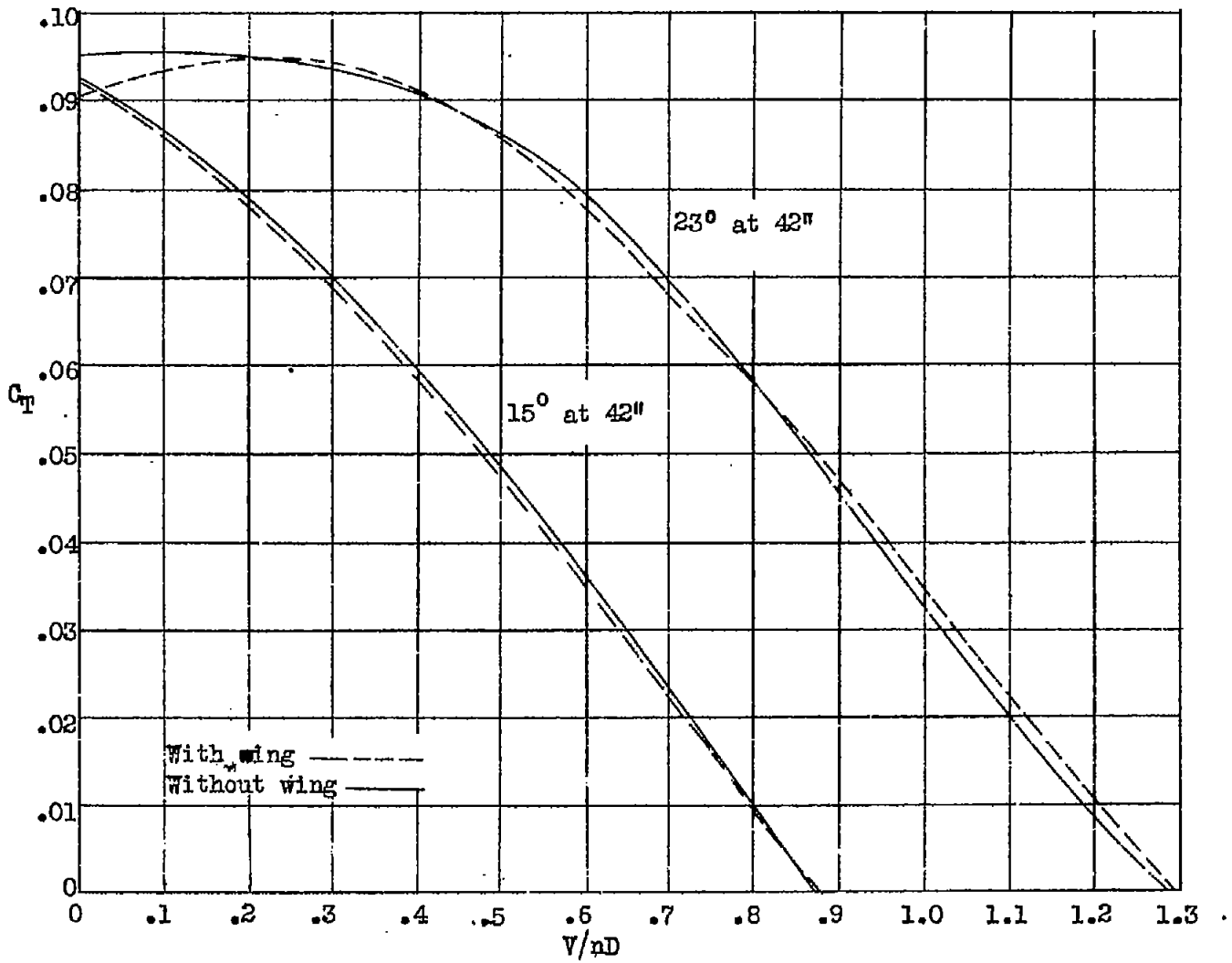

Fig.20 Propeller No.4412 on fuselage No.2

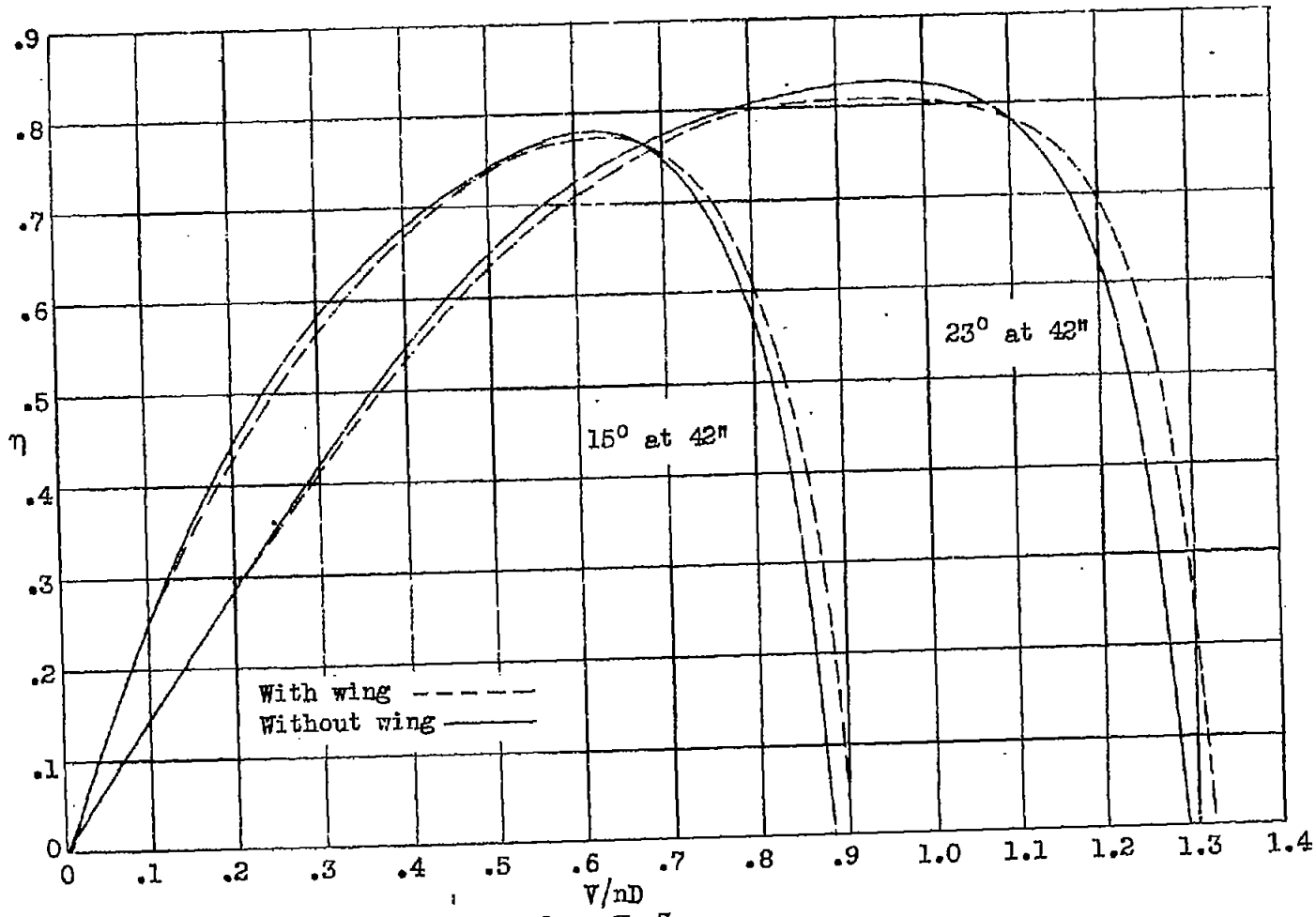

Fig.21 Propeller No.4412 on fuselage No.3

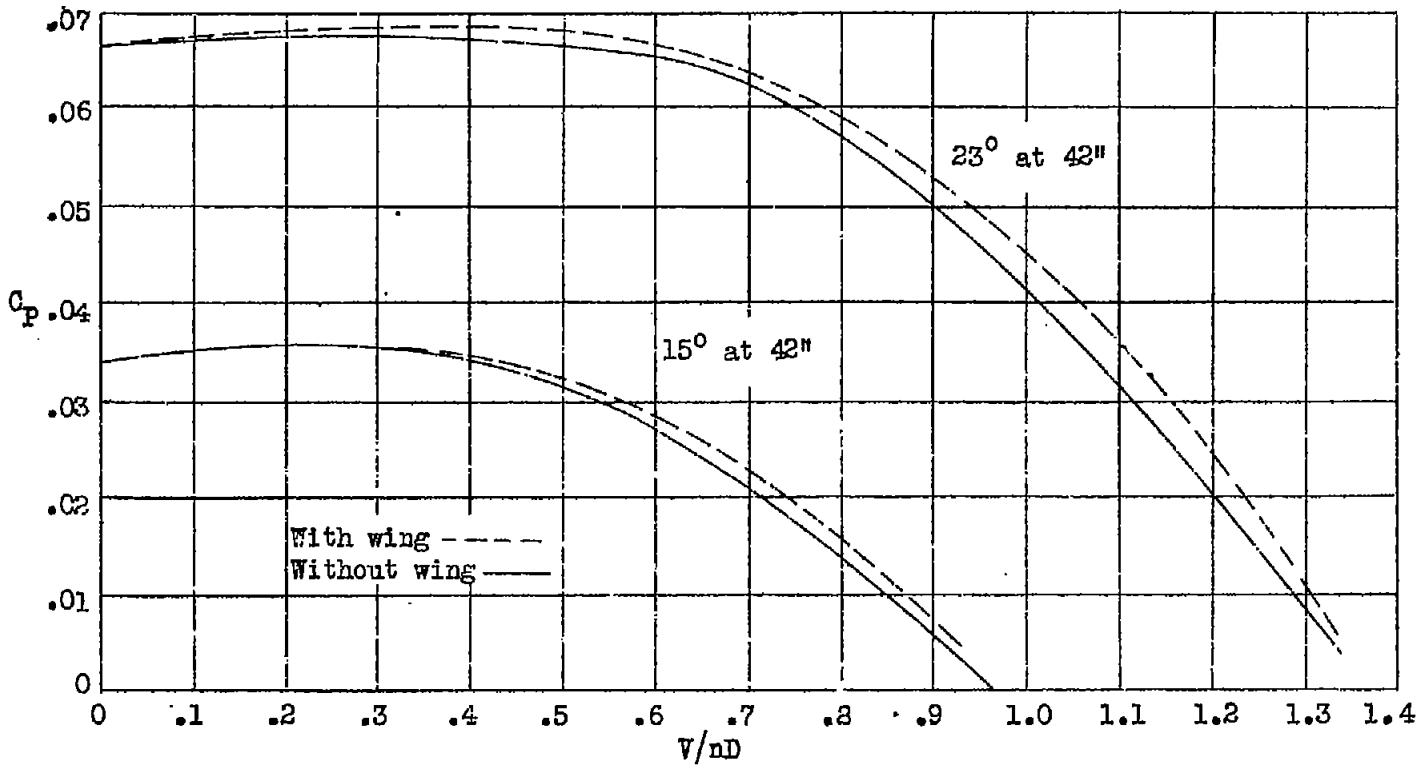

Fig.22 Propeller No.4412 on fuselage No.3

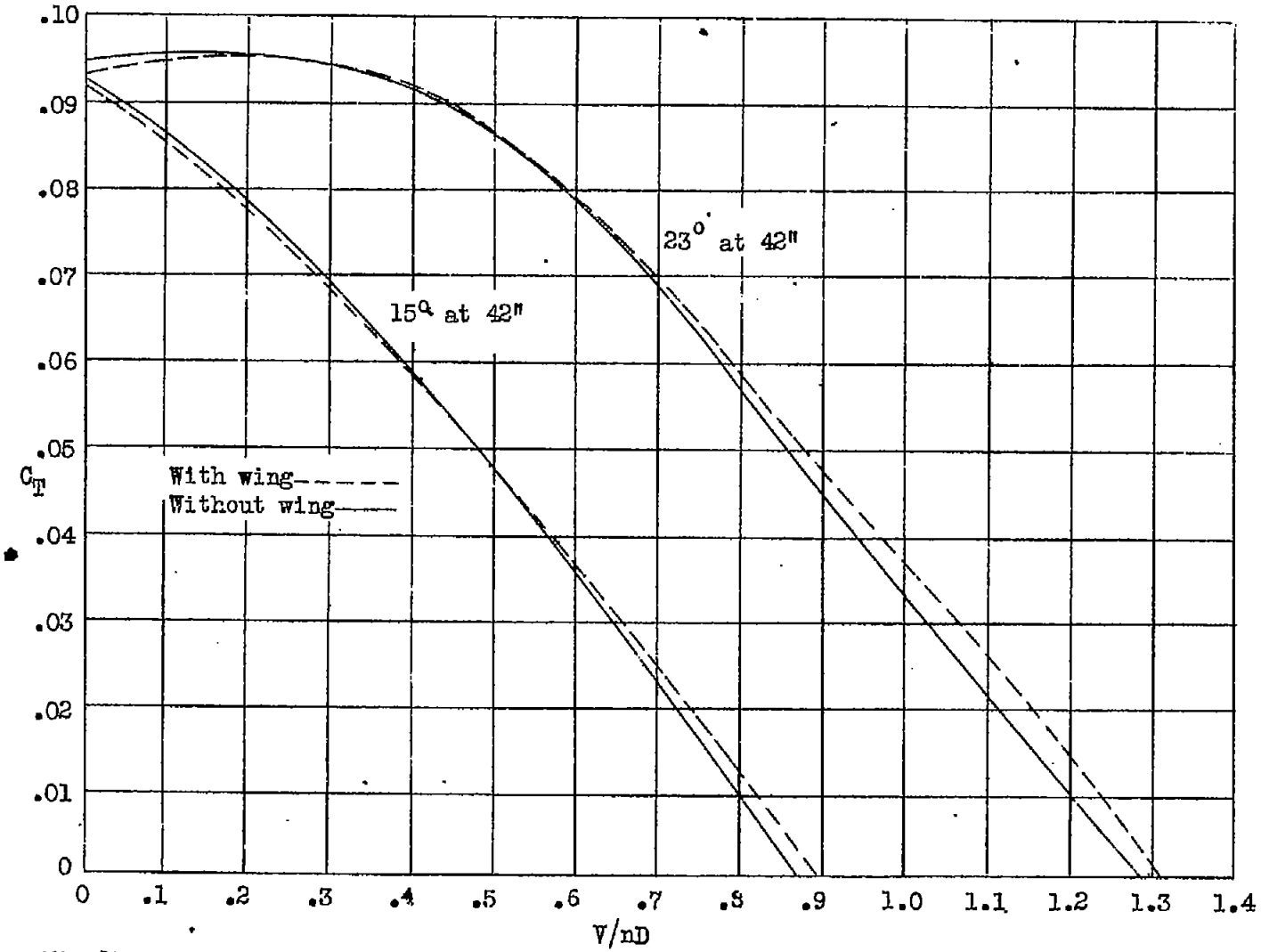

Fig.23 Propeller No.4412 on fuselage No.3

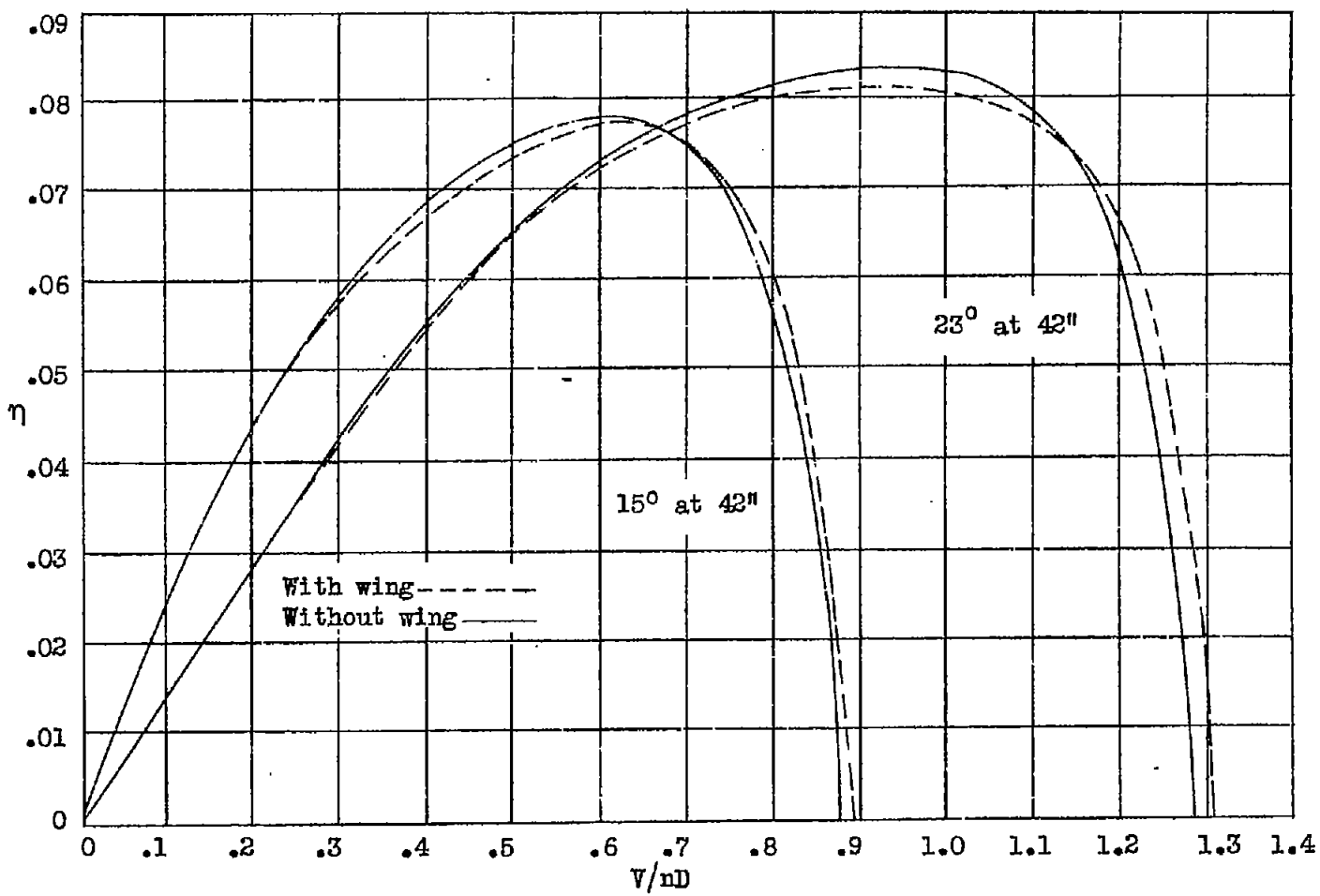

Fig.24 Propeller No 4412 on fuselage No.4

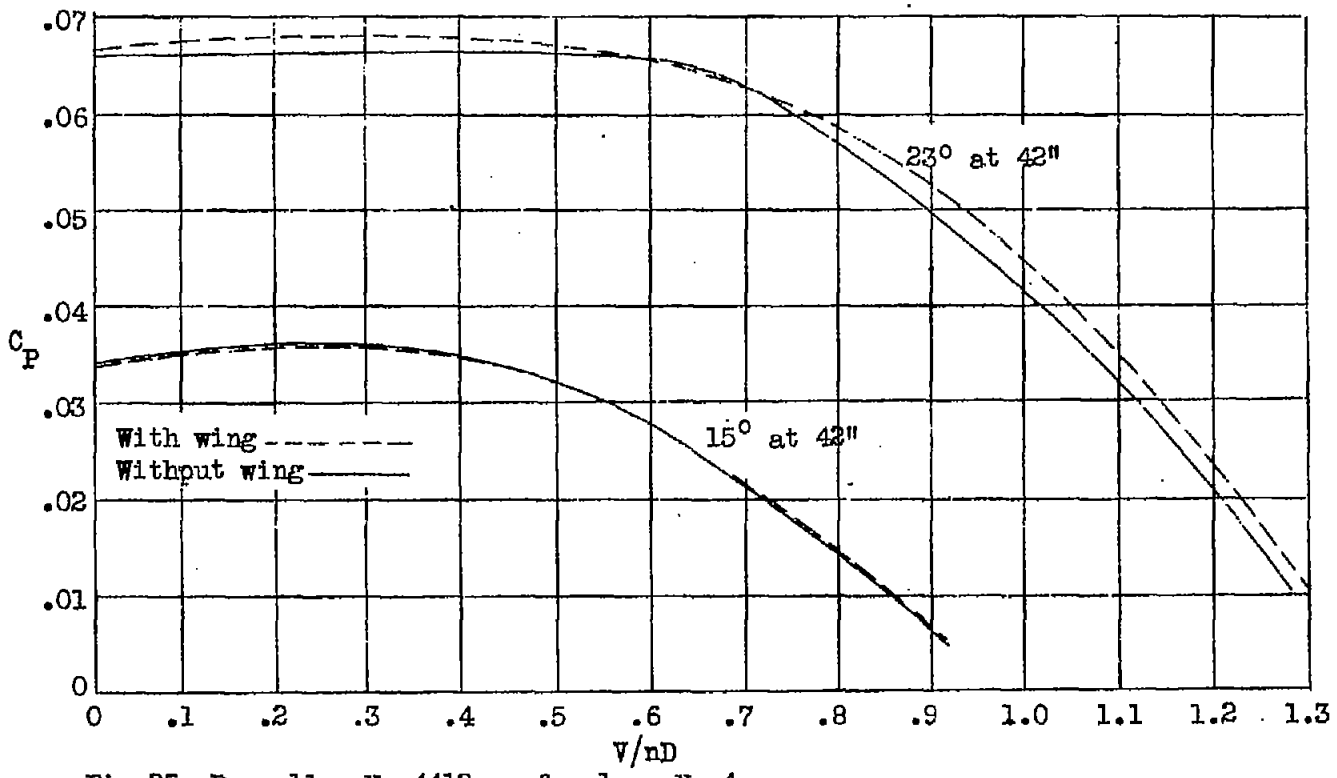

Fig.25 Propeller No.4412 on fuselage No.4

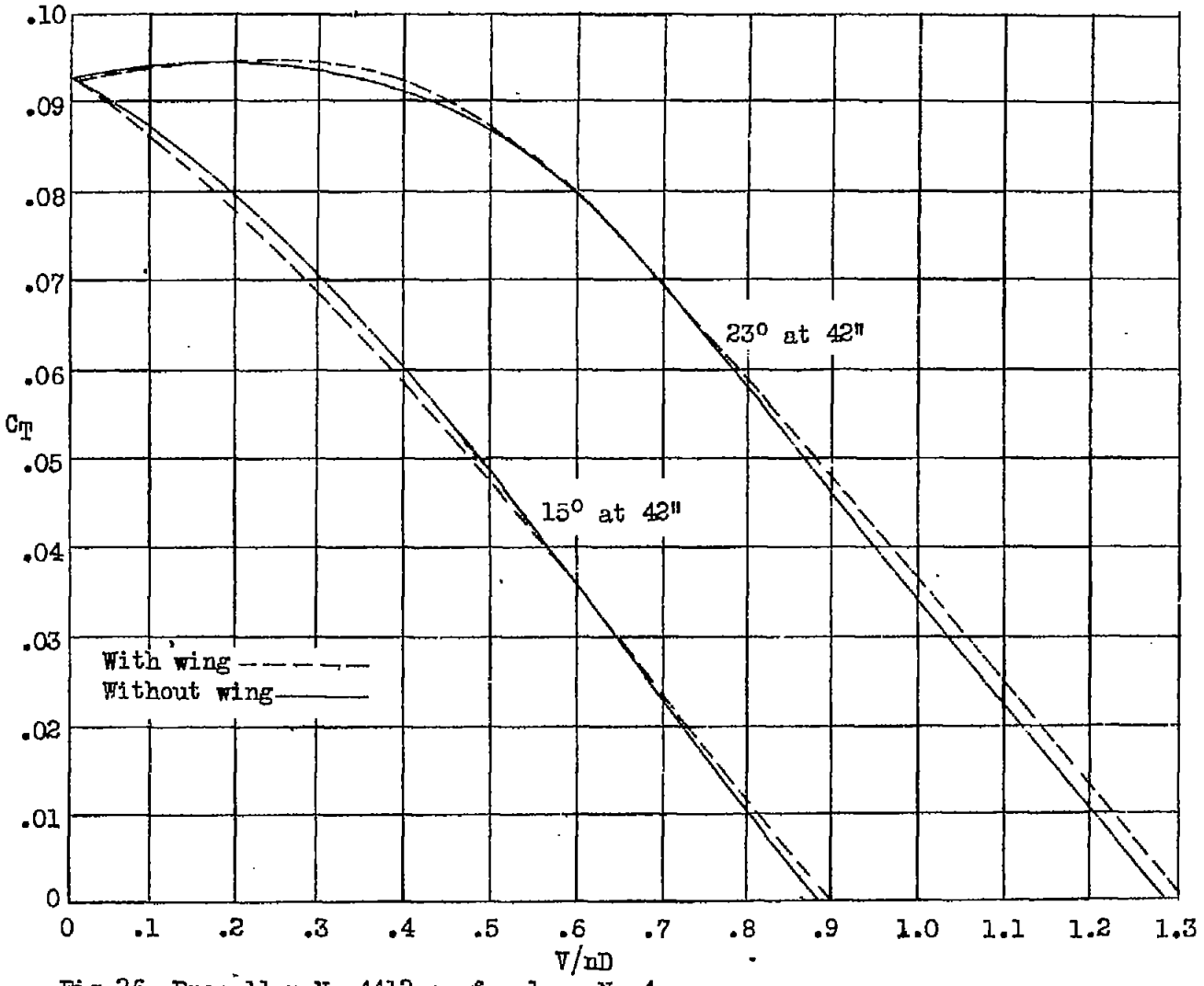

Fig.26 Propeller No.4412 on fuselage No.4