APR 30 1930
TO: L.M.A.L. Library
#135.41
Boeing PW-9
Copy 1

TECHNICAL NOTES

NATIONAL ADVISORY COMMITTEE FOR AERONAUTICS

No. 337

PRESSURE DISTRIBUTION ON THE TAIL SURFACES OF A PW-9 PURSUIT AIRPLANE IN FLIGHT

By Richard V. Rhode
Langley Memorial Aeronautical Laboratory

Washington
April, 1930

FILE COPY
To be returned to
the files of the Langley
Memorial Aeronautical
Laboratory

NASA Technical Library
3 1176 01431 9348

NATIONAL ADVISORY COMMITTEE FOR AERONAUTICS.

TECHNICAL NOTE NO. 337.

PRESSURE DISTRIBUTION ON THE TAIL SURFACES OF A PW-9 PURSUIT AIRPLANE IN FLIGHT.

By Richard V. Rhode.

Summary

This note presents the pressure distribution data obtained on the tail surfaces of a PW-9 airplane in a number of flight maneuvers. The results given are a part of those obtained in an extensive investigation of the pressure distribution over all of the lifting and control surfaces of this airplane. They are given in tabular and curve form, and are discussed briefly in respect to their comparison with the existing tail surface design specifications.

This information is issued in advance of the report on the complete investigation, because of the immediate interest in tail surface loads occasioned by the results of recent tail surface pressure distribution tests and failures occurring in flight. It should serve as a guide to those designers who wish to insure structural safety in their airplanes pending the formulation of more satisfactory design rules for tail surfaces.

Introduction

At the present time, specifications for the structural design of tail surfaces are being revised. This has become necessary with the advent of higher performance and greater maneuverability in airplanes, both experience, as represented by actual failures in the air, and experiment (Reference 1), indicating that certain of the design requirements of the existing specifications were much too low, particularly with respect to service aircraft of the pursuit or fighter type. In view, therefore, of the interest in the subject at this time, the important results bearing on the design of tail surfaces obtained in the pressure distribution tests on the PW-9 airplane are presented herewith to supplement the data obtained on the F6C-4 (Reference 1), and to furnish a guide for designers pending the production of the new specifications.

The investigation was conducted by the National Advisory Committee for Aeronautics at Langley Field, Virginia. Complete results of the tests will be presented in a report now in preparation.

Apparatus and Method

The airplane used in these tests was a Boeing PW-9 pursuit airplane modified in a few minor particulars which do not affect the significance of the results. Characteristics of this airplane are given in Table I.

Measurements of pressure were made simultaneously at 23 stations on the right horizontal tail surfaces and 26 stations on the vertical surfaces, as indicated by the orifice locations given in the pressure diagrams that follow. Air speed, normal acceleration at the center of gravity, angular velocity, and control position were also measured simultaneously with the pressures. The method of measuring these quantities does not differ in any essential feature from the methods used in previous investigations, and a description will not be given here, but may be found in the complete report.

The precision of the tests is summarized as follows:

1. Individual pressures ..... ±3 per cent
2. Total loads ..... ±6 "
3. Air speeds ..... ±4 "
4. Acceleration ..... ±.2 g
5. Control positions ..... 2 degrees
6. Synchronization ..... 1/20 second

Results and Discussion

The results are presented in the form of (a) pressure diagrams; (b) histories, showing the variation of loads, moments, air speed, acceleration, and control position with respect to time throughout each maneuver; (c) a table; and (d) curves showing the comparison of the design requirements of the old specifications with some of the most severe loads obtained

in flight. For most maneuvers only two pressure plots are given corresponding to maximum positive and negative loads. These, however, are supplemented by complete sets of pressure diagrams for two of the most interesting maneuvers. Single plots are given for the dive and push-down. The histories given include several of the abrupt power-on pull-ups and a right and left roll at high speed. In addition, several more mild pull-ups are included as of some interest, although not indicating any severe loads.

Pressures acting upwards are considered positive for the horizontal surfaces, and are plotted to the right of the base lines on the pressure diagrams; and vice versa. Pressures acting from starboard to port are considered positive for the vertical tail surfaces, and are plotted above the base line, and vice versa.

The present specifications for the design of tail surfaces of pursuit type airplanes impose average loads of 45 and 40 pounds per square foot on the horizontal and vertical surfaces, respectively. It is interesting, as a primary comparison between observed and specified loads, to note the loads given in the columns of average loads in Table II. It must be borne in mind while doing this, that the specifications are supposed to incorporate a factor of safety of 2; thus, any value given in the table exceeding one-half the specified value is to be considered an overload, and vice versa. It will be noted that the horizontal tail surface loads in the pull-ups are generally lower than

one-half the design load, exceeding this value in runs Nos. 134 and 137 and closely approaching it in run No. 133. In run No. 133 the C.G. acceleration or applied load factor was 6 or one-half of the design high incidence load factor for this airplane, making the safety factor for both wings and tail surfaces approximately 2 (on the basis of loads only) in the same maneuver. In the dives listed, however, the tail loading is excessive, being 26.4 and 30.7 pounds per square foot for runs Nos. 213 and 226, respectively, indicating that the design requirements should be revised upwards. Other high loadings on the horizontal surfaces occur in the high-speed barrel rolls, runs Nos. 222 and 225, the values exceeding one-half the design loading, but remaining less than the dive loadings. It is interesting to note that in the rolls the maximum up-load is of the same order of magnitude as the down-loads, whereas in all other maneuvers the down-loads only are severe.

On the vertical surfaces only two loads listed exceed the safe value, in the right barrel roll, run No. 222, and in the pull-out of a dive, run No. 226. Since the barrel roll under discussion was quite severe and may be considered an unusual case, it is not reasonable to expect that under normal conditions vertical tail surface loads would be so high. The load in the pull-out is probably a fair one for comparison, however. In this case the high load was a result of the tendency of the airplane to yaw as a result of aileron displacement made to counteract a tendency

to roll at high diving speeds. In other words, it is a result of the particular rigging of this airplane and would probably have been much less if the airplane had been rigged perfectly symmetrical. The possibility, however, of the vertical surfaces receiving high loads under what might be considered normal conditions cannot be denied.

Besides the average loading likely to be encountered on the tail surfaces, the specifications must anticipate the distribution of load with particular respect to the high concentrations that may occur in some places, usually the leading edges of stabilizer and fin. The present specifications dispose the load uniformly over the fixed surfaces, from whence it decreases until, at the trailing edge of the movable element, its value is one-third the value over the fixed surface. In addition, special leading edge loads are applied, extending from the leading edge back one-fifth of the chord of the fixed surface, and having a uniform value equal to three times the specified average loading. Thus, the leading edge load for a pursuit airplane stabilizer would be 135 pounds per square foot and for the fin 120 pounds per square foot. On the horizontal surfaces the maximum pressures on the leading edge occur in the severe pull-ups and exceed the specified leading edge value by a very appreciable margin, although, fortunately, they are usually quite local in character and do not extend over the specified area. The fact that they not only exceed half the specified loading, but

actually exceed the whole of it, is well worth noting. In all of these cases (pull-ups), however, the accelerations at the C.G. were greater than six. In the less severe power-on pull-ups, the maximum pressures are under 135 pounds per square foot, but in some cases are considerably greater than half that value, indicating that the specifications should be revised upwards. In one dive, run No. 226, the pressure was equal to that specified within the experimental error and in run No. 326 was even greater, and it would seem from this that to double the present leading edge specified load would give a much more reasonable value.

In no case does the pressure on the leading edge of the fin exceed the specified value, although in the pull-out it reaches a value of 90 pounds per square foot. It should be mentioned here that the vertical tail surfaces of the PW-9 are thin, whereas the horizontal surfaces are relatively thick.

A few graphical comparisons of some of the most severe rib loads with those specified are given in Figures 28 and 29. They are self-explanatory and need no further comment.

Conclusions

Specified tail load design loadings should be revised upwards. This is particularly true of leading edge loads, which should be at least doubled for thick sections.

Langley Memorial Aeronautical Laboratory,
National Advisory Committee for Aeronautics,
Langley Field, Va., March 19, 1930.

References

1. Rhode, R. V. : The Pressure Distribution Over the Horizontal and Vertical Tail Surfaces of the FSC-4 Pursuit Airplane in Violent Maneuvers. N.A.C.A. Technical Report No. 307, 1929.

2. Handbook of Instructions for Airplane Designers. Engineering Division, Army Air Service, 1925.

TABLE I. Characteristics of PW-9 Airplane

Span of upper wing	32 ft. 0 in.
Span of lower wing	22 " 5-3/4 in.
Centric chord of upper wing*	5 " 3-1/4 "
Distance from center line to centric chord	7 " 10 in.
Centric chord of lower wing	4 " 6 "
Distance from center line to centric chord	5 " 7-3/8 in.
Gap	52 in.
Stagger**	+2° 22'
Dihedral (upper wing lower surface)	1° 6'
Dihedral (lower wing lower surface)	1° 23'
C.G. position, aft leading edge of root section, lower wing	18-1/4 in.
C.G. position, above lower surface root section, lower wing	23-3/4 ".
Distance from C.G. to center line of elevator hinge	14 ft. 11-5/8 "
Distance from C.G. to center line of rudder hinge	15 " 3-5/8 "
Area of upper wing	160.4 sq.ft.
Area of lower wing	80.8 "
Total wing area	241.2 "
Area of horizontal tail surfaces	29.84 "

*Centric chord is defined as the chord passing through the centroid of the plan form of that portion of the wing extending from the root to the tip.

**Stagger measured at a section parallel to the plane of symmetry, and passing through the centroid of the plan form of one lower wing between a line perpendicular to the chord of the upper wing and a line drawn from a point one-third chord length from the leading edge of the lower wing to a point similarly located on the upper wing.

Area of vertical tail surfaces	10.74	sq.ft.
Weight of airplane during tests	2970	lb.
Rated horsepower at 2000 r.p.m.	375	
Power loading	7.92	lb./hp
Wing loading	12.3	lb./sq.ft.
I_x	1697.0	slugs-ft.^{2}
I_y	1875	(approximately)
I_z	2600	"

TABLE II. Tail Summary

Run No.	Maneuver	Initial air speed m.p.h.	Time (sec.)	Horizontal Surfaces: Total normal force lb.	Horizontal Surfaces: Average load lb./sq.ft.	Horizontal Surfaces: Total moment about hinge center line lb.ft.	Horizontal Surfaces: Maximum pressure lb./sq.ft.	Horizontal Surfaces: Location of maximum pressure	Vertical Surfaces: Total normal force lb.	Vertical Surfaces: Average load lb./sq.ft.	Vertical Surfaces: Total moment about hinge center line lb.ft.	Vertical Surfaces: Maximum pressure lb./sq.ft.	Vertical Surfaces: Location of maximum pressure
130	pull-up	116	1/4	-220	-14.7	- 58	-32.7	0-4					
			1/2	-124	- 8.3	150	-33.8	0-4					
			1	98	6.6	285	84.7	N-1					
			1-1/2	108	7.2	295	64.0	N-1					
131	pull-up	126	1/4	-199	-13.3	- 89	-30.2	0-4					
			1/2	-119	- 8.0	86	-38.5	N-4					
			1	57	3.8	309	83.3	N-1					
132	pull-up	137	1/2	-206	- 13.8	24	-41.6	0-4					
			1-1/2	48	3.2	186	64.4	N-1					
133	pull-up	149	1/4	-319	- 21.3	9	-43	N-4					
			1/2	-155	- 10.4	120	-46	0-4					
			1	56	3.7	158	60	N-1					
134	pull-up	154	1/8	-343	- 22.9	-133	-54	N-4					
			1/4	-211	- 14.1	- 52	-56	0-4					
			5/8	162	10.8	486	137	N-1					
135	pull-up	163	3/8	-290	- 19.4	84	-60	0-4					
			7/8	177	11.8	525	134	N-1					
136	pull-up	172	1/4	-275	- 18.4	-97	-45.7	N-2					
			5/8	2.4	.2	224	-62	N-4					
			7/8	200	13.4	540	156	N-1					
137	pull-up	181	1/8	-453	- 30.1	-164	-65.5	N-4					
			3/8	-258	- 17.3	270	-65	N-4					
			1	224	14.9	600	176	N-1					
200	pull-up power off	108	1/4	-165	- 11.0	- 46	-24	N-1					
			1-1/4	70	4.7	206	56	0-1					

TABLE II. Tail Summary (Cont.)

Run No.	Maneuver	Initial air speed m.p.h.	Time (sec.)	Horizontal Surfaces: Total normal force lb.	Horizontal Surfaces: Average load lb./sq.ft.	Horizontal Surfaces: Total moment about hinge center line lb.ft.	Horizontal Surfaces: Maximum pressure lb./sq.ft.	Horizontal Surfaces: Location of maximum pressure	Vertical Surfaces: Total normal force lb.	Vertical Surfaces: Average load lb./sq.ft.	Vertical Surfaces: Total moment about hinge center line lb.ft.	Vertical Surfaces: Maximum pressure lb./sq.ft.	Vertical Surfaces: Location of maximum pressure
209	pull-up power off	139	1/4	-192	-12.9	- 53	- 34	0-4					
			1	42	2.8	190	75	0-1					
213	dive	308*	12	-395	-26.4	-430	- 97	N-1					
215	push-down	186.1*	3-1/2	- 50.4	- 3.4	-520	- 78	N-1					
222	right roll	167***	1/4	-359	-24.1	-230	- 48	N-2	-	-	-	-	-
			1/2	-197.5	-13.2	- 22	- 49	N-4	268	25	123.2	52	S-3
			3/4	-	-	-	-	-	228	21.1	52.5	55	Q-3
			1	97.5	6.5	305	69	0-1	-	-	-	-	-
			2-1/2	364	24.4	300	55	0-1	-	-	-	-	-
225	left roll	163***	0	-	-	-	-	-	22.6	2.1	15	13	R-4
			1/4	-349.6	-23.4	390	-40	N-2	-	-	-	-	-
			1/2	-	-	-	-	-	174.4	16.2	55	-34	S-3
			3/4	- 28	- 1.9	-160	73	0-1	-168	-15.6	-10	-39	S-3
			7/8	98	6.6	450	-54	N-4	-	-	-	-	-
			1	111.6	7.5	435	-49	N-4	-138	-12.8	-40	-35	Q-3
226	dive	260*	$16\frac{13}{15}$	-458	-30.7	324	-133	M-1					
226	pull-out from dive	250*	$23\frac{1}{4}$	-324	-21.7	-550	- 88	N-2	294	27.4	-43	90	S-1

TABLE II. Tail Summary (Cont.)

Run No.	Maneuver	Initial air speed m.p.h.	Time (sec.)	Horizontal Surfaces: Total normal force lb.	Horizontal Surfaces: Average load lb./sq.ft.	Horizontal Surfaces: Total moment about hinge center line lb.ft.	Horizontal Surfaces: Maximum pressure lb./sq.ft.	Horizontal Surfaces: Location of maximum pressure	Vertical Surfaces: Total normal force lb.	Vertical Surfaces: Average load lb./sq.ft.	Vertical Surfaces: Total moment about hinge center line lb.ft.	Vertical Surfaces: Maximum pressure lb./sq.ft.	Vertical Surfaces: Location of maximum pressure
315**	pull-up	114.5	1/2	-321.6	-21.5	- 80	-44.2	X-4					
			1-1/8	81.8	5.5	276	75	X-1					
			1-1/4	146.8	9.8	359	75	X-1					
			1-1/2	186.8	12.5	207	52	X-1					
316**	pull-up	149.8	15/16	-451	-30.2	- 46	-53.6	V-1					
			1	-400	-26.8	60	-62.4	X-4					
			1-5/8	217.6	14.6	480	121	X-1					
			1-3/4	219.6	14.7	410	117	X-1					
323**	pull-up	121.5	0	- 72	- 4.8	-104	-21	V-1					
			1-5/8	98.4	6.6	287	68	X-1					
324**	pull-up	148.5	0	-130.8	- 8.8	-245	-30.2	W-1					
			1	147.2	9.9	341	93	X-1					
326**	high-speed dive	-	4	-498	-33.4	-705	-149	X-1					

*Air speed at given timing line.
**Pressures recorded on left horizontal tail surfaces.
***Approximation air speed.

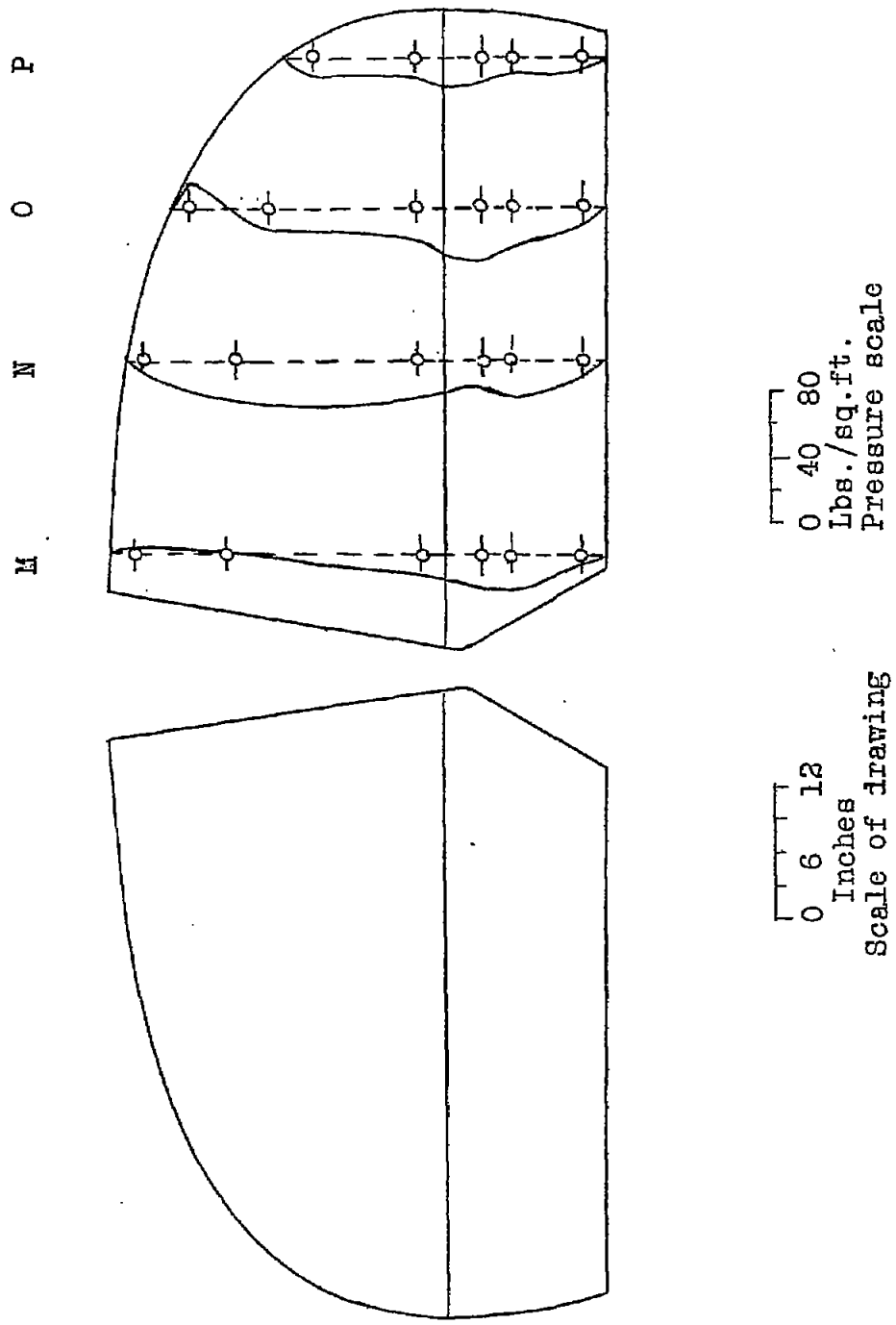

Fig. 1a Run No. 130, Power-on pull-up at 112 m.p.h. Maximum down load.

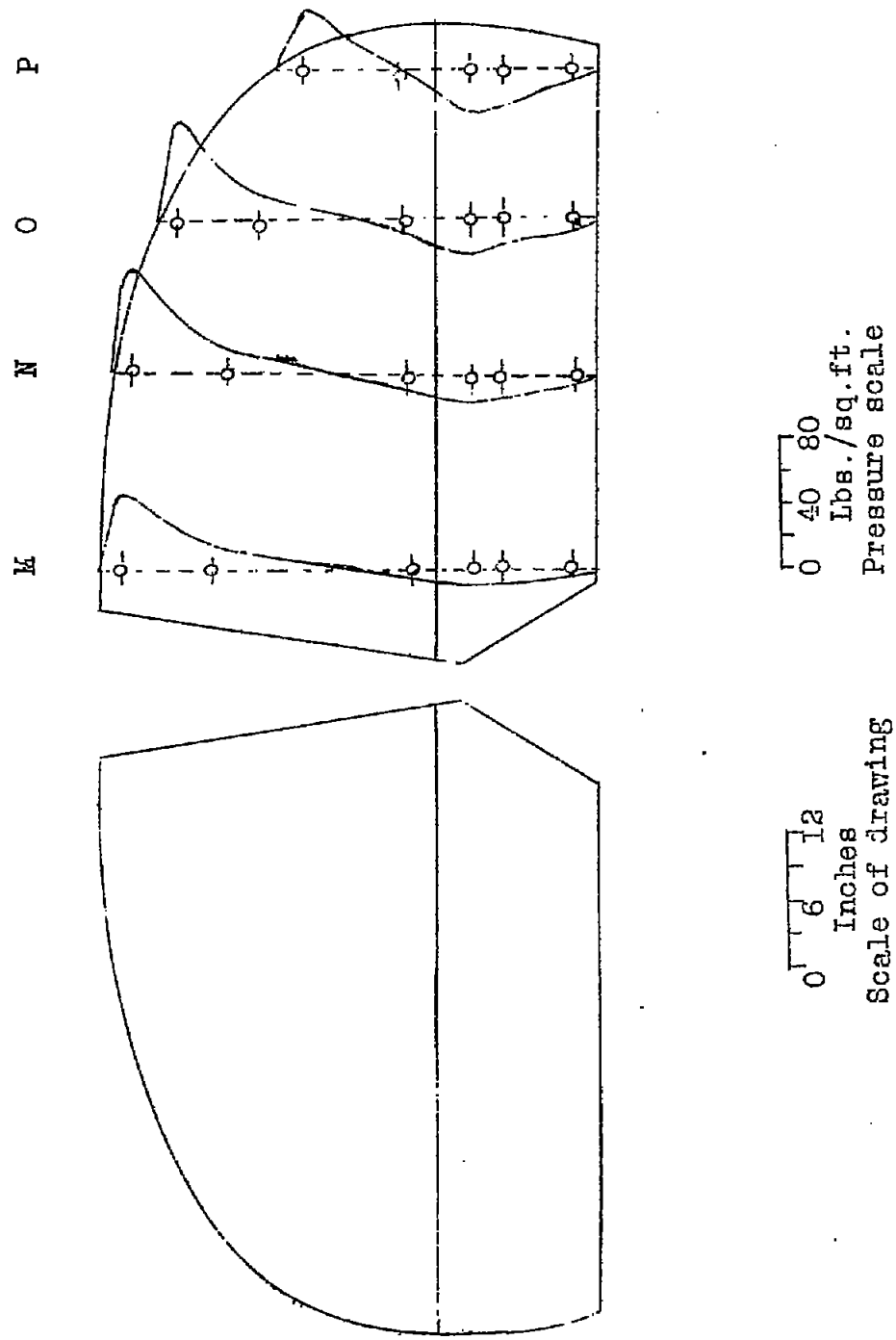

Fig. 1b Run No. 130; Power-on pull-up at 112 m.p.h.
Maximum up load.

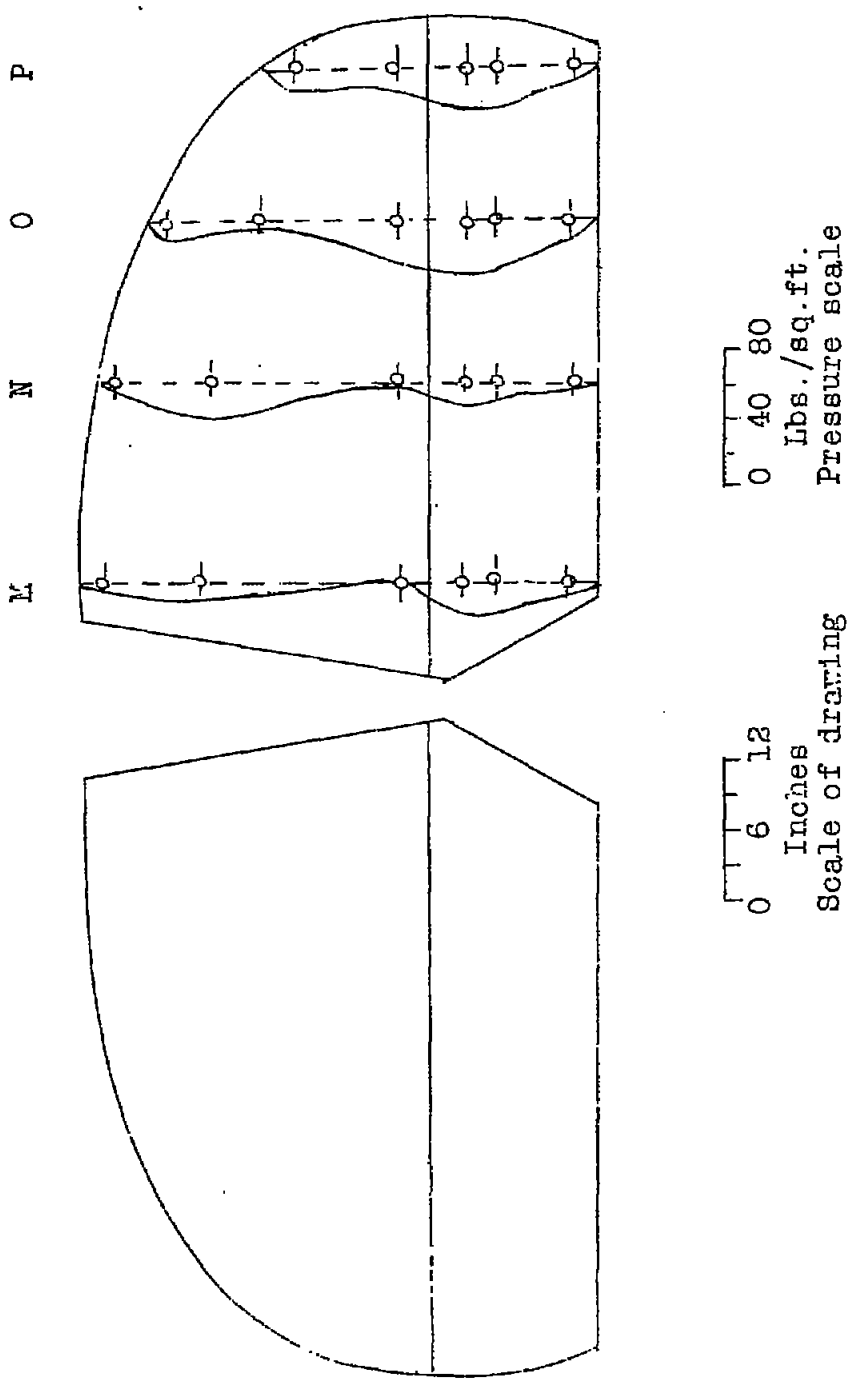

Fig. 2a Run No. 131; Power-on pull-up at 124 m.p.h.
Maximum down load.

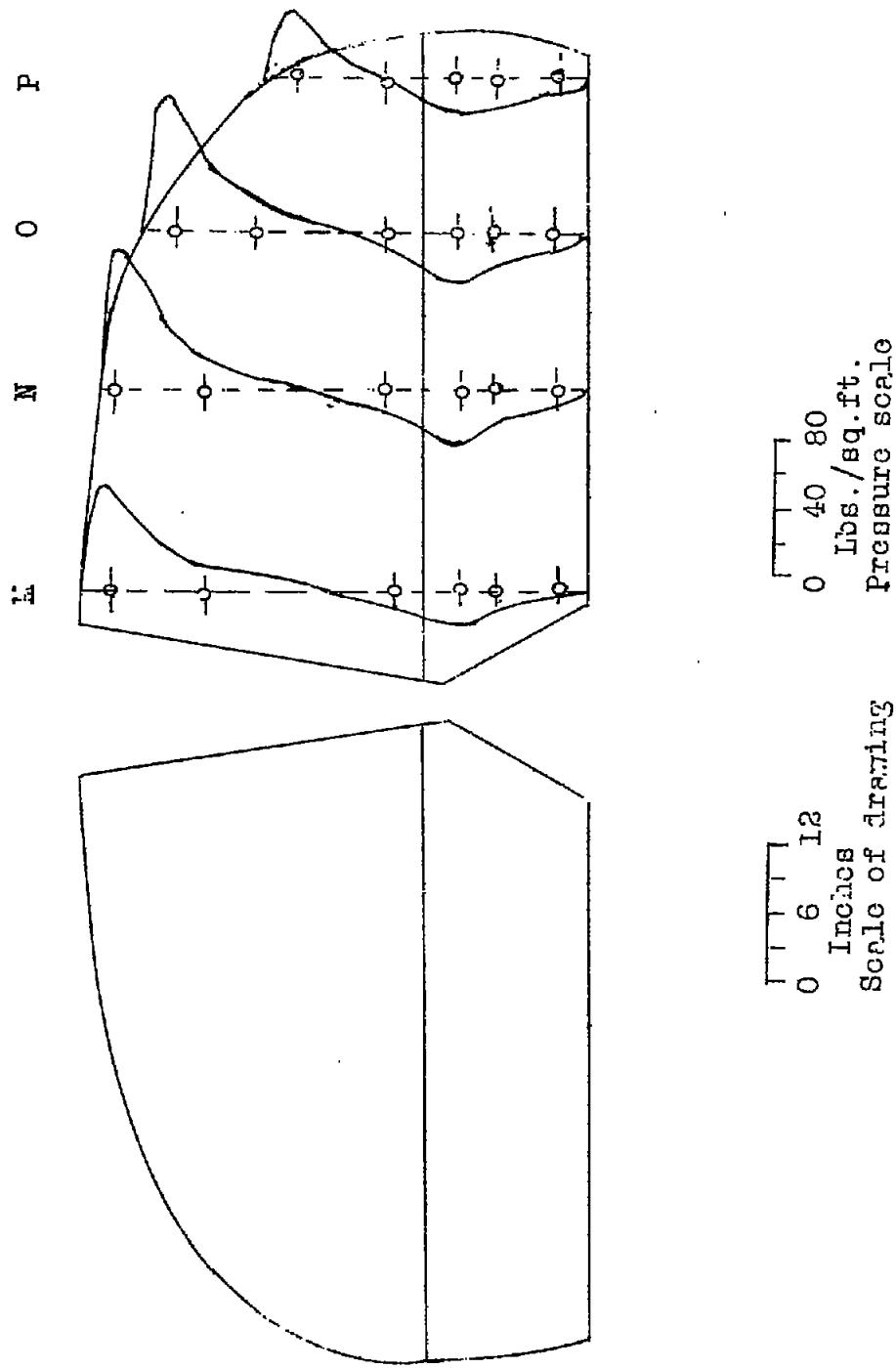

Fig. 2b Run No. 131; Power-on pull-up at 124 m.p.h. Maximum up load.

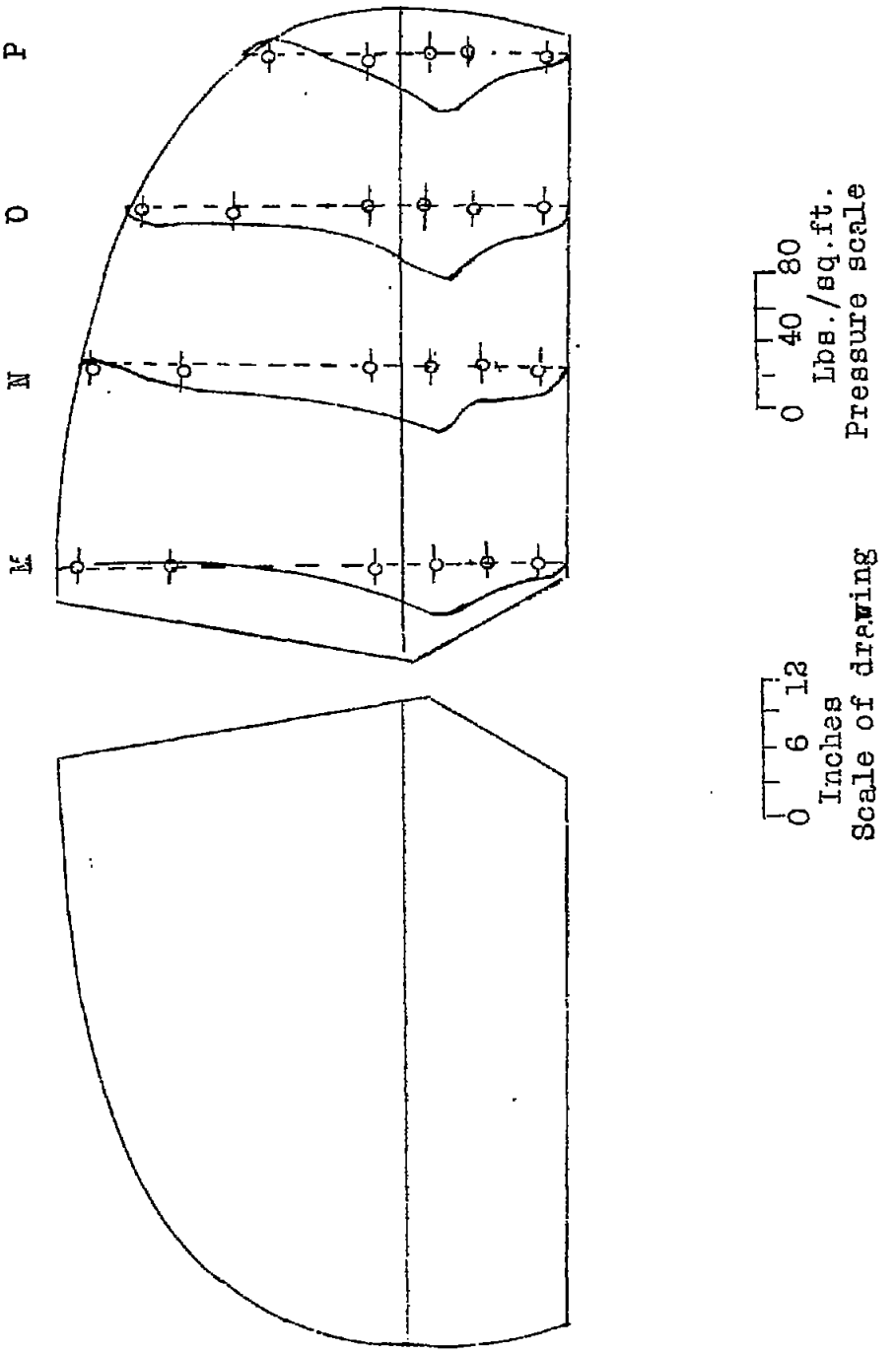

Fig. 3a Run No. 132; Power-on pull-up at 134 m p.h.
Maximum down load.

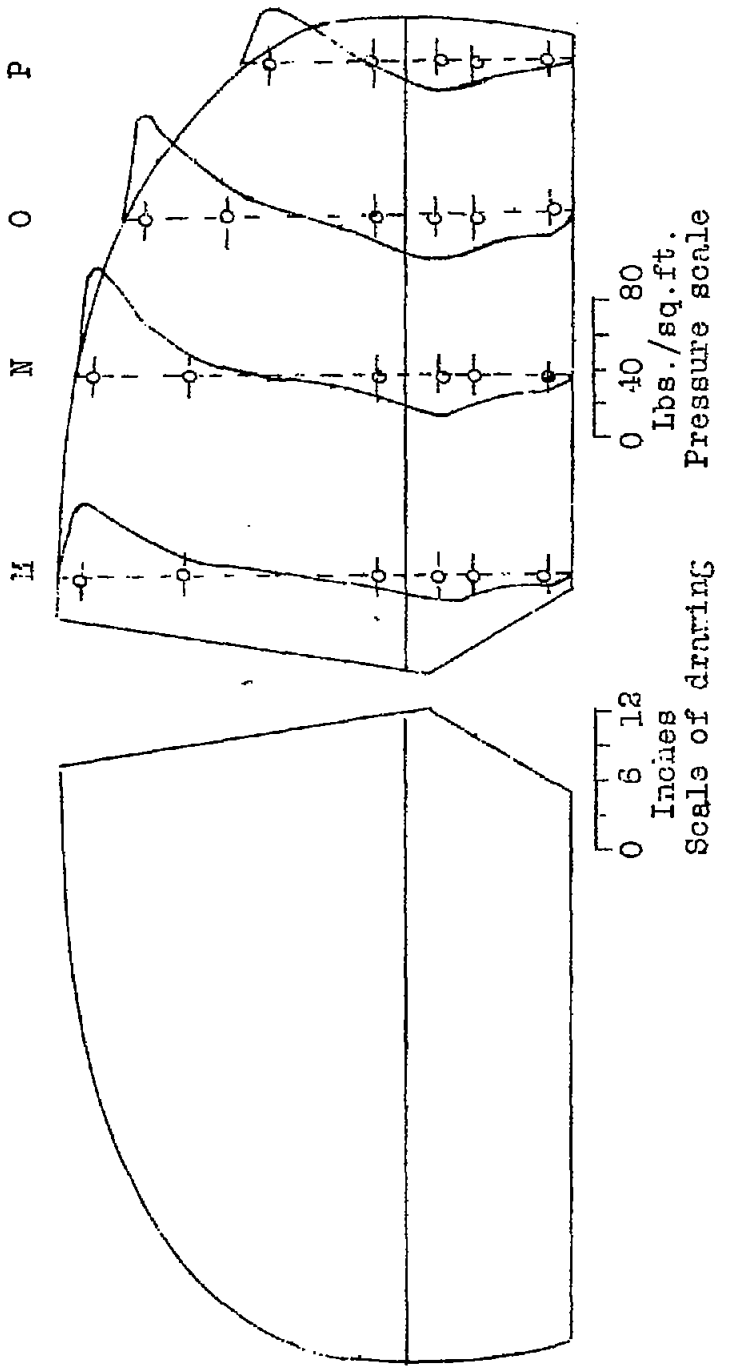

Fig. 3b Run No. 132; Power-on pull-up at 134 m.p.h. Maximum up load.

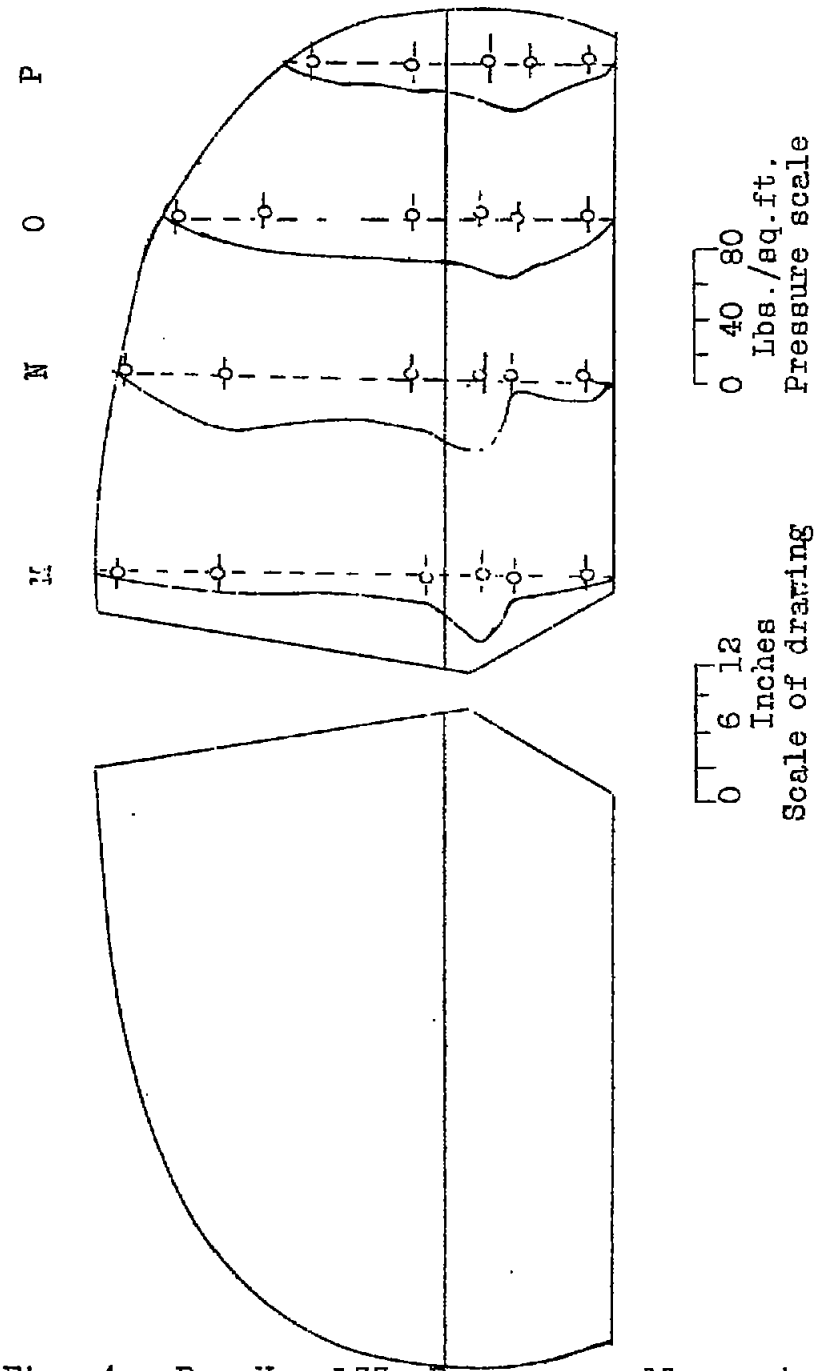

Fig. 4a Run No. 133; Power-on pull-up at 149 m.p.h
Maximum down load.

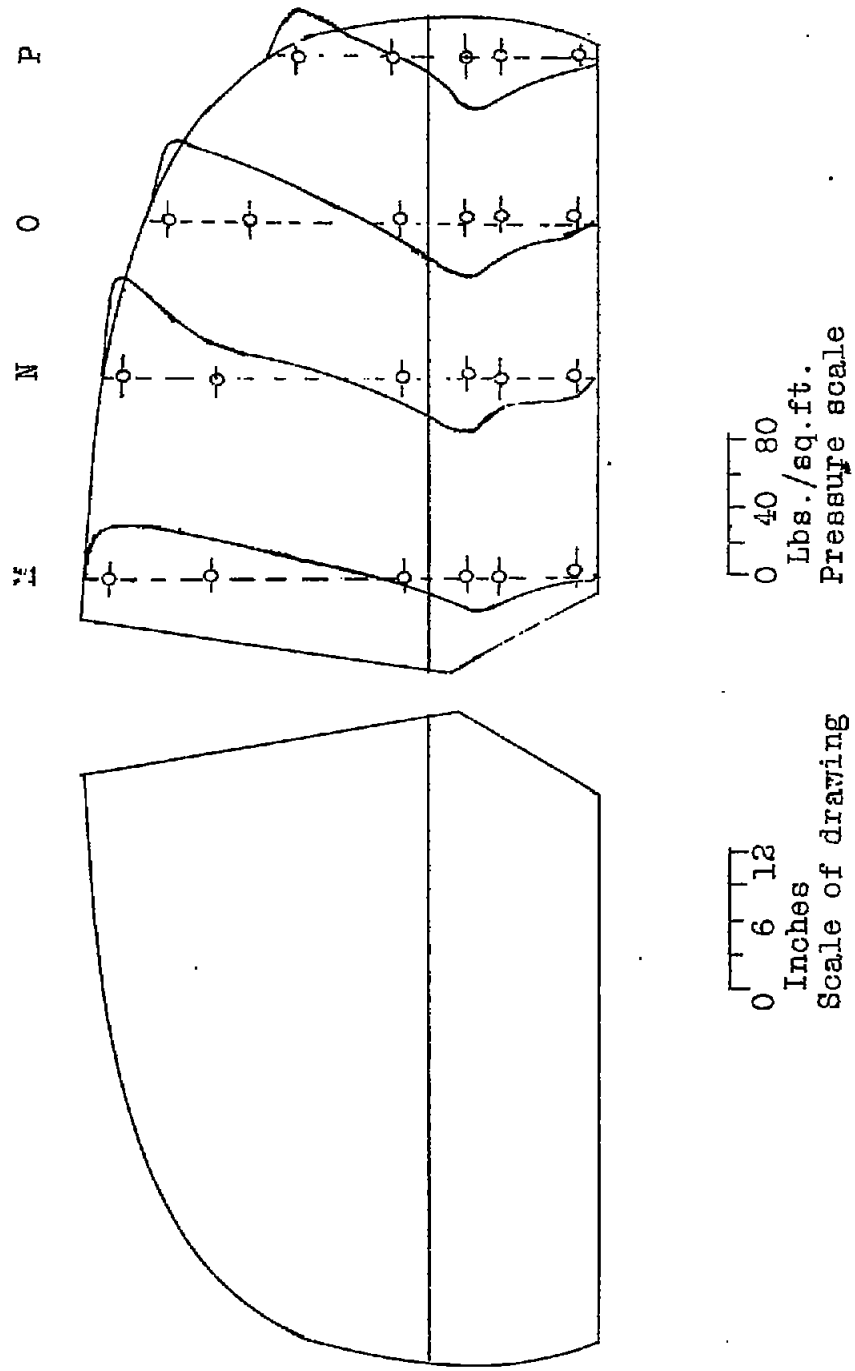

Fig. 4b Run No. 133; Power-on pull-up at 149 m.p.h.
Maximum up load.

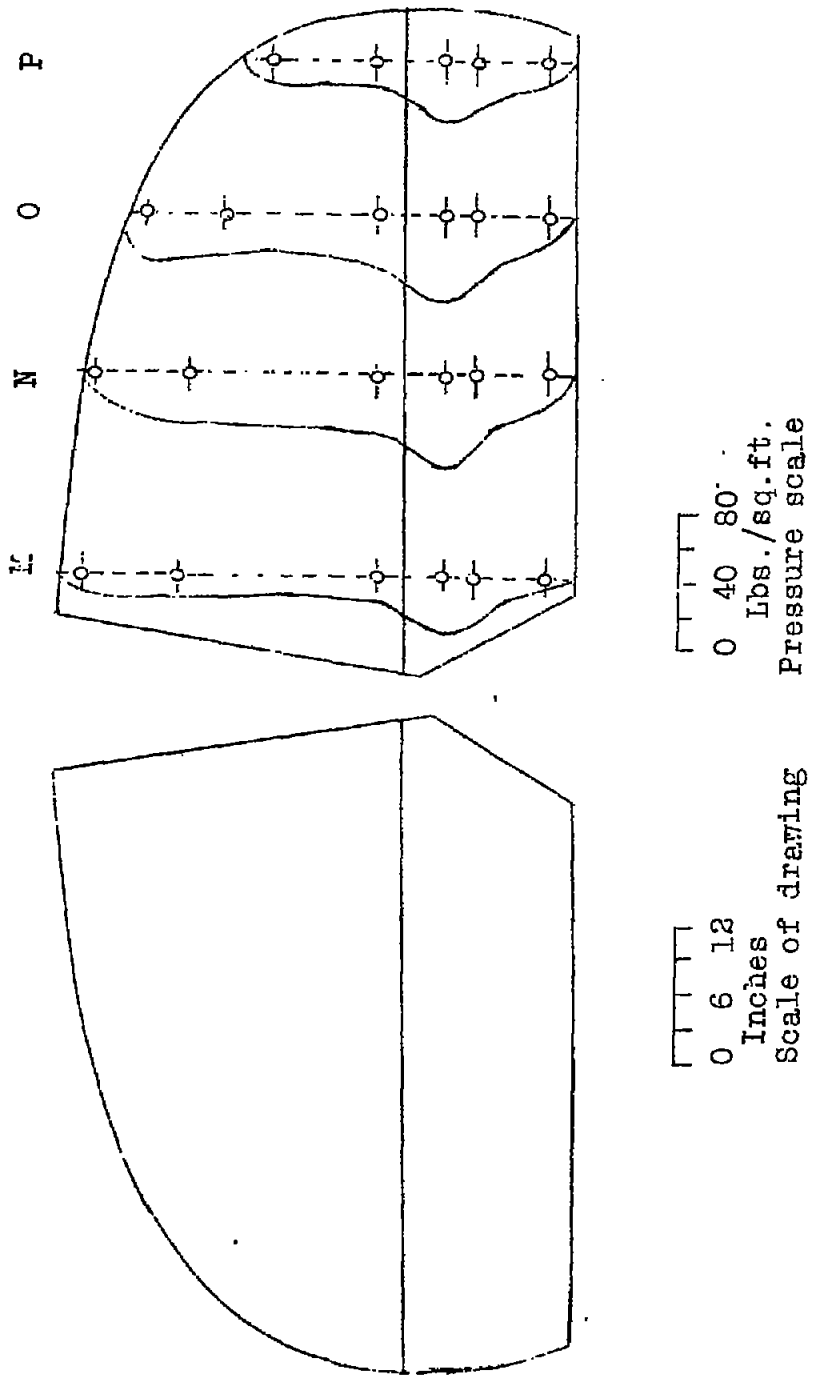

Fig. 5a Run No. 134; Power-on pull-up at 154 m.p.h.
Maximum down load.

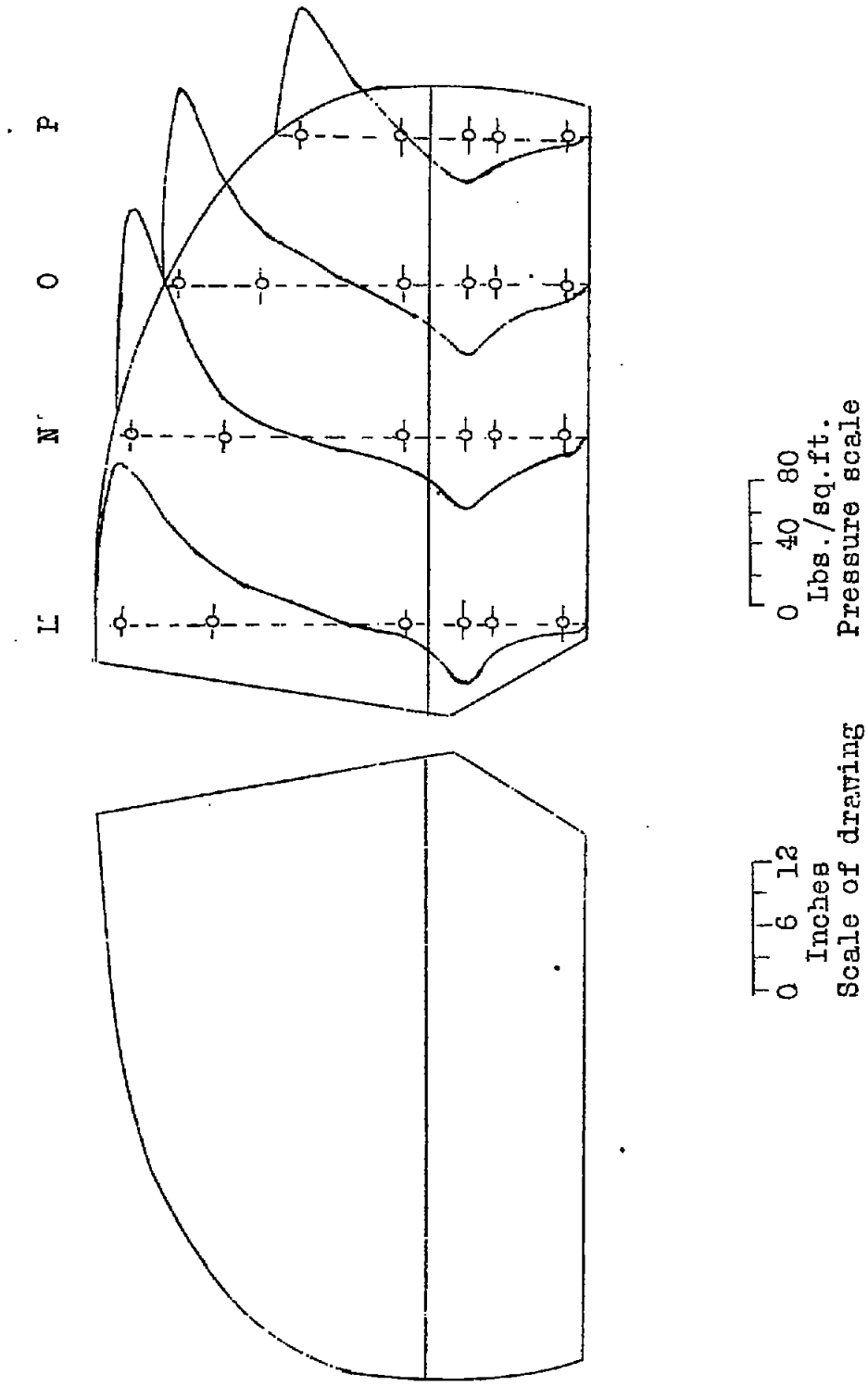

Fig. 5b Run No. 134, Power-on pull-up at 154 m.p.h. Maximum up load.

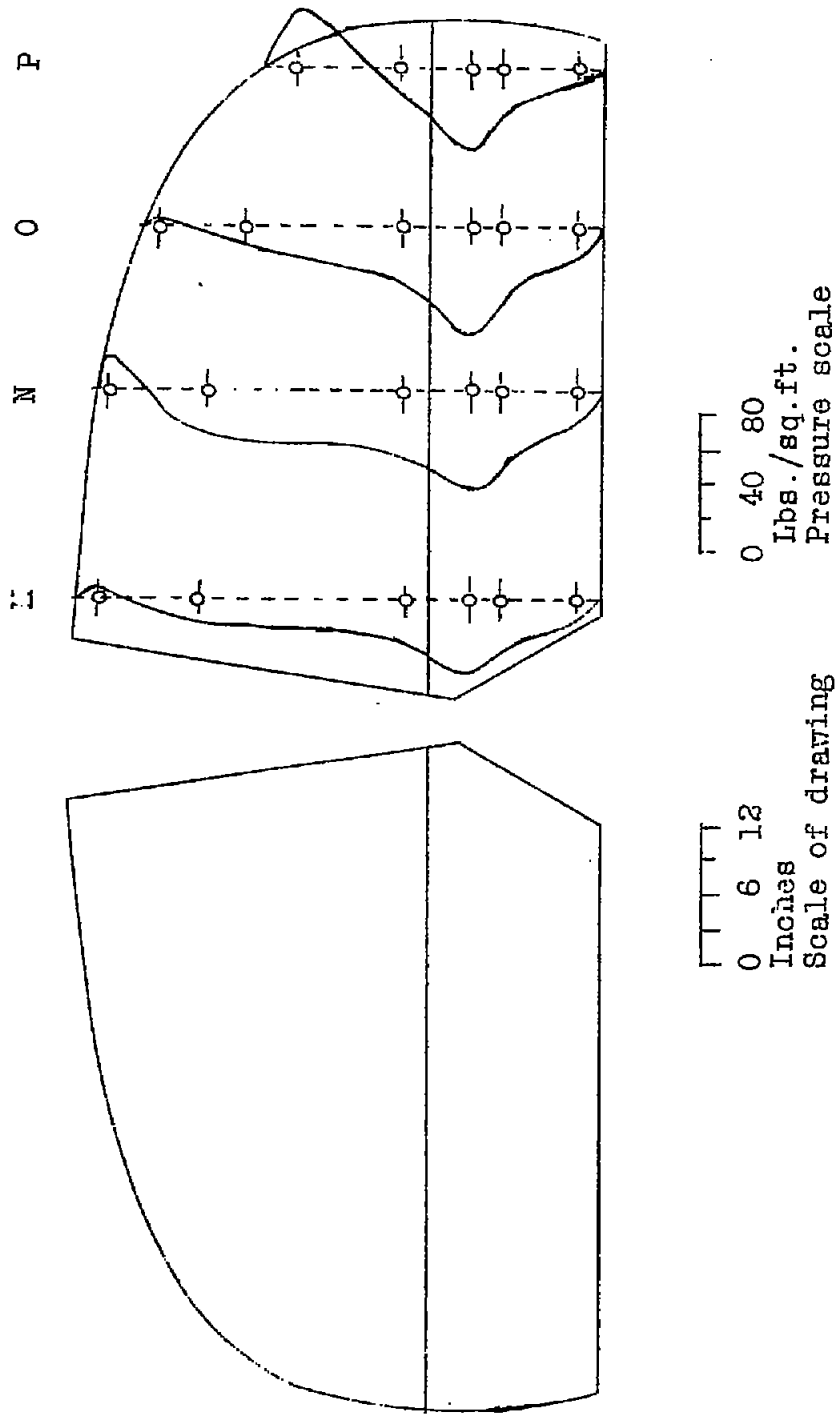

Fig. 6a Run No. 135; Power-on pull-up at 165 m.p.h. Maximum down load.

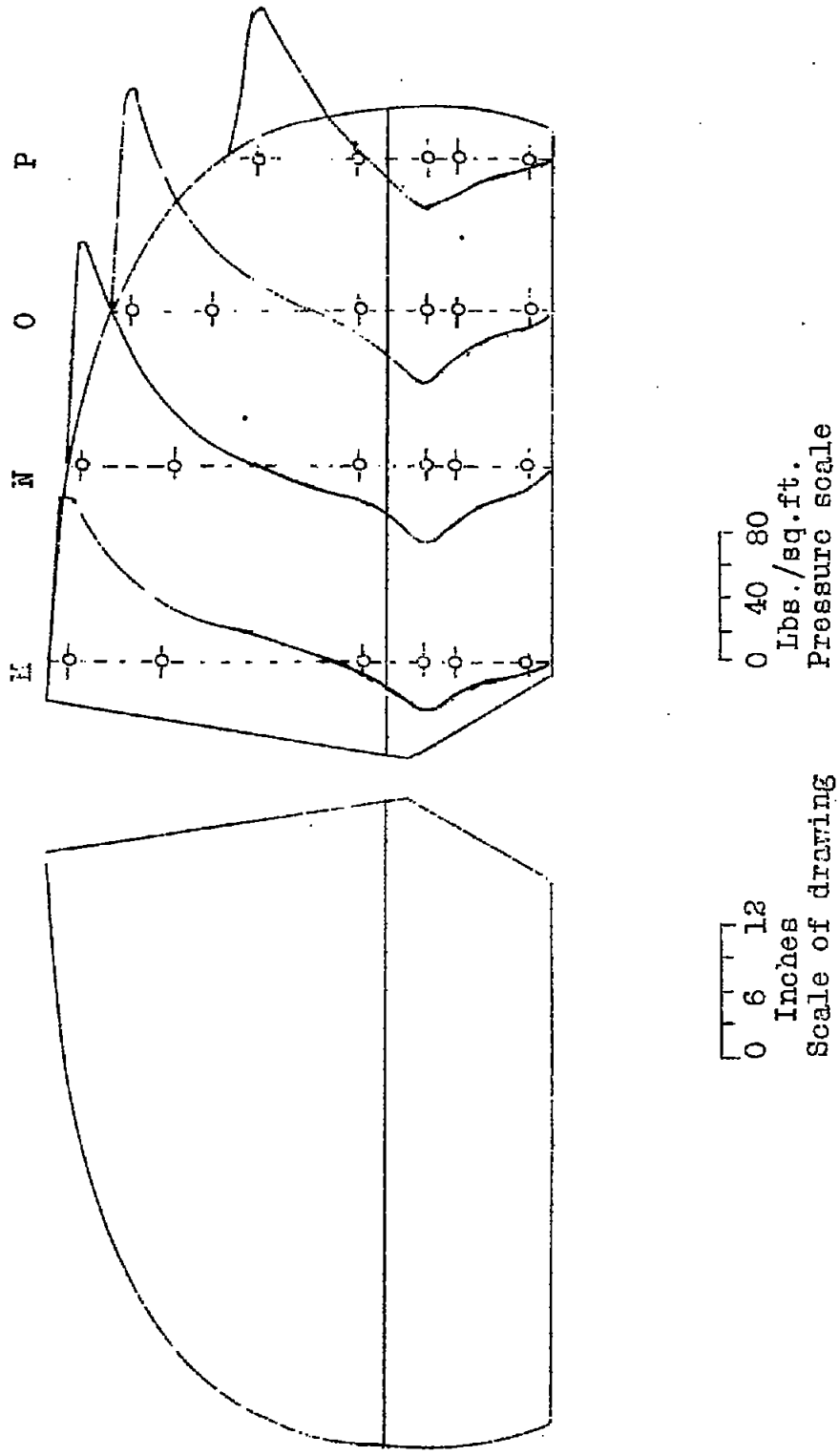

Fig. 6b Run No. 135; Power-on pull-up at 165 m.p.h. Maximum up load.

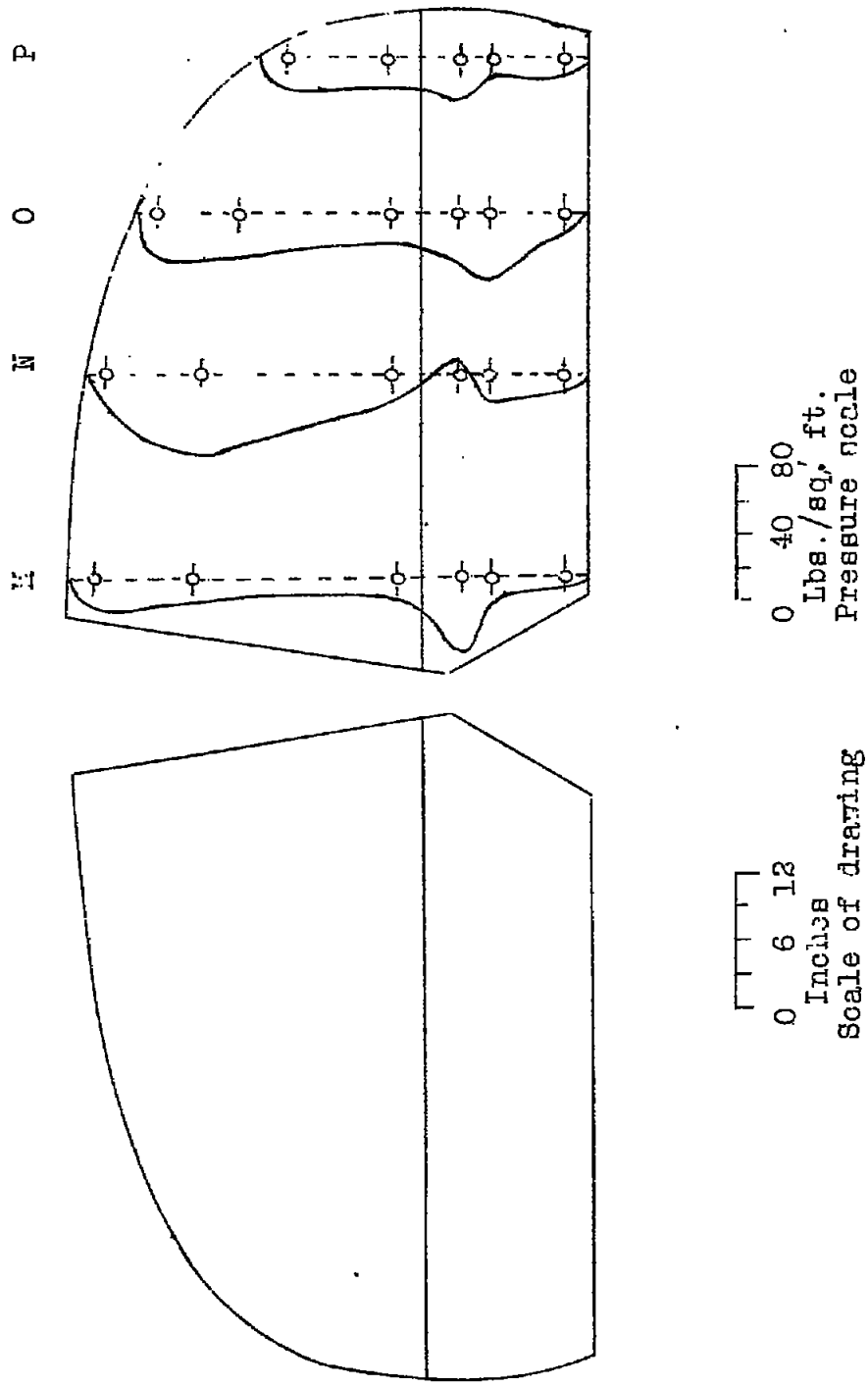

Fig. 7a Run No. 136; Power-on pull-up at 175 m.p.h.
Maximum down load.

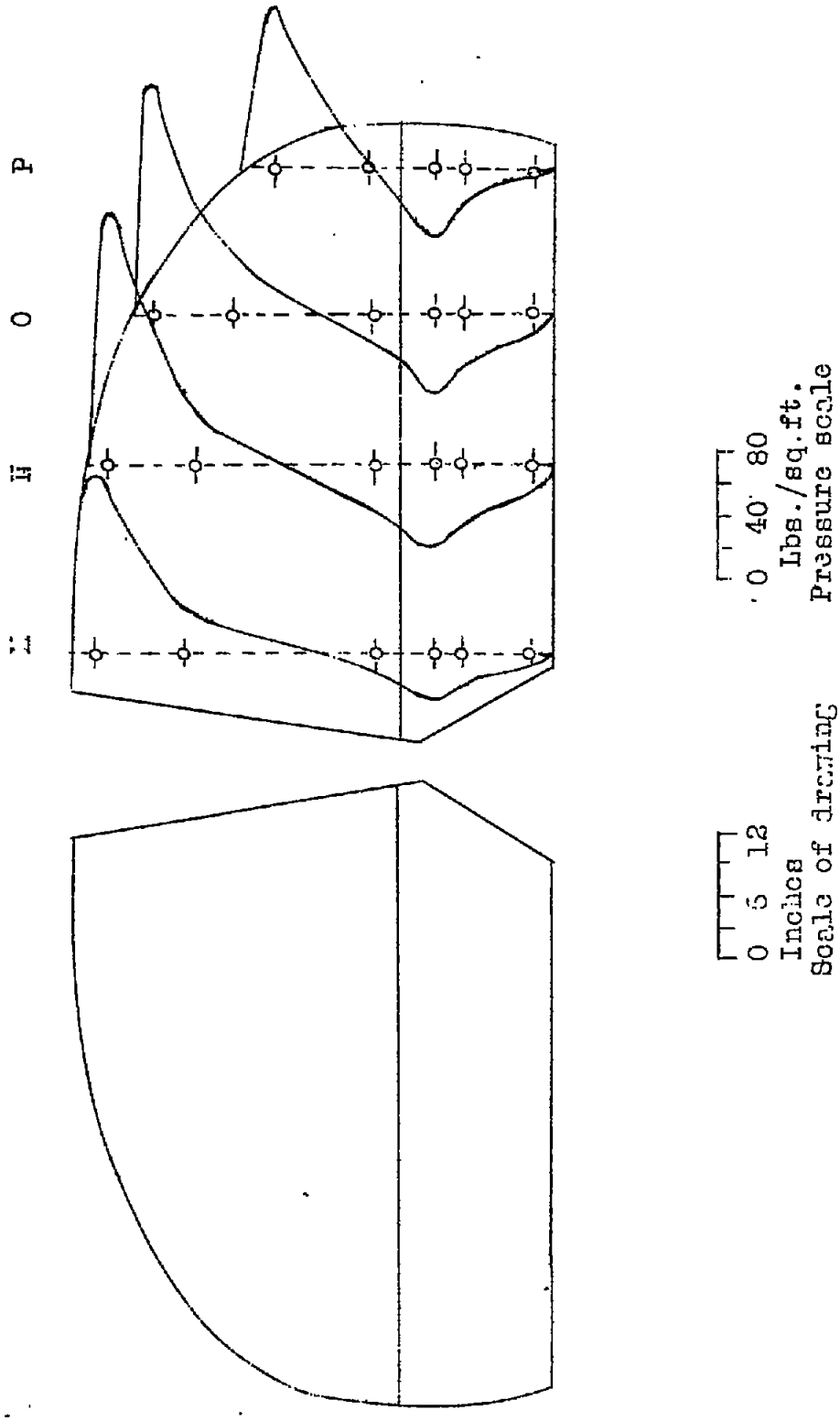

Fig. 7b Run No. 136; Power-on pull-up at 175 m.p.h. Maximum up load.

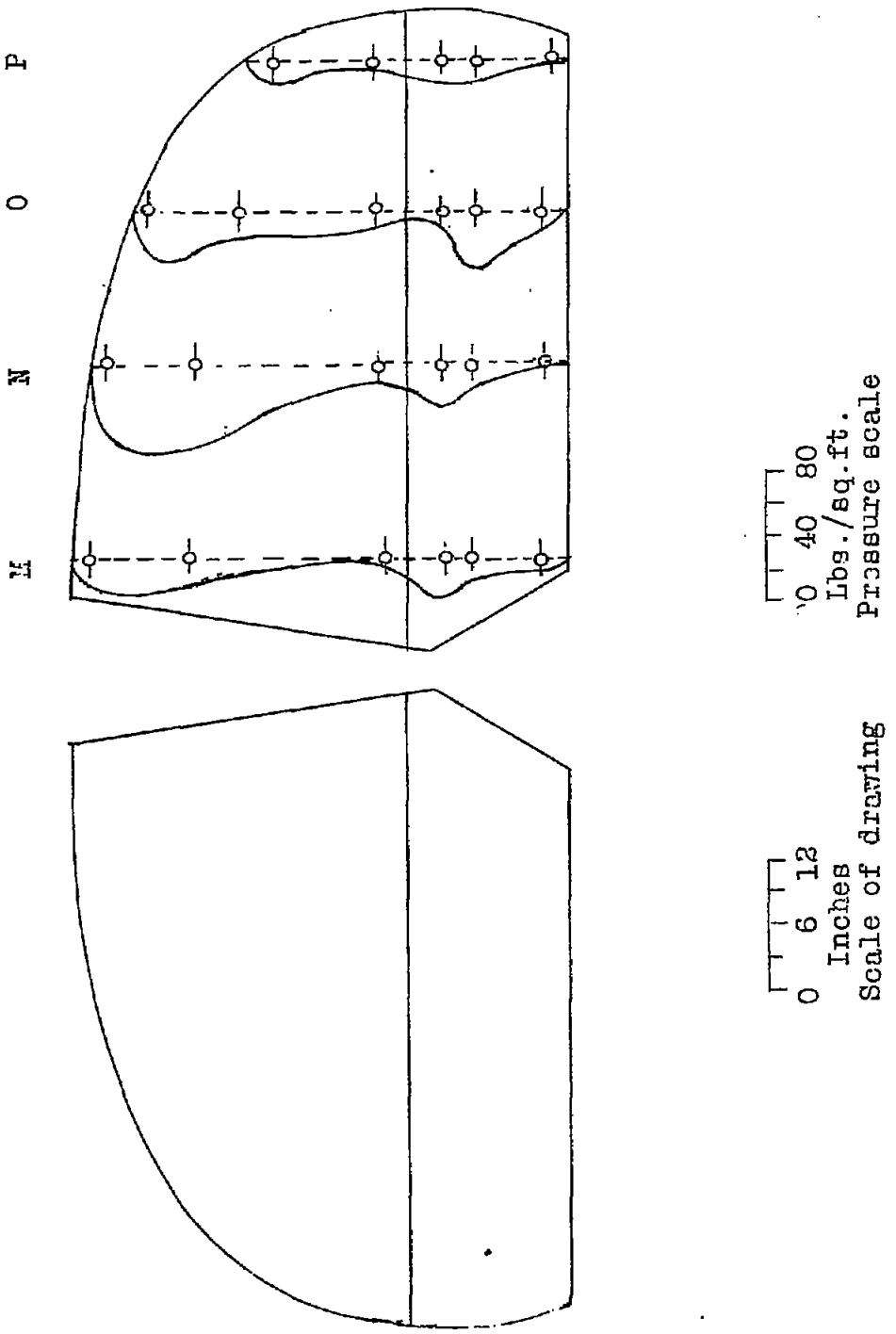

Fig. 8a Run No. 137; Power-on pull-up at 185 m.p.h.
Time interval .1 seconds.

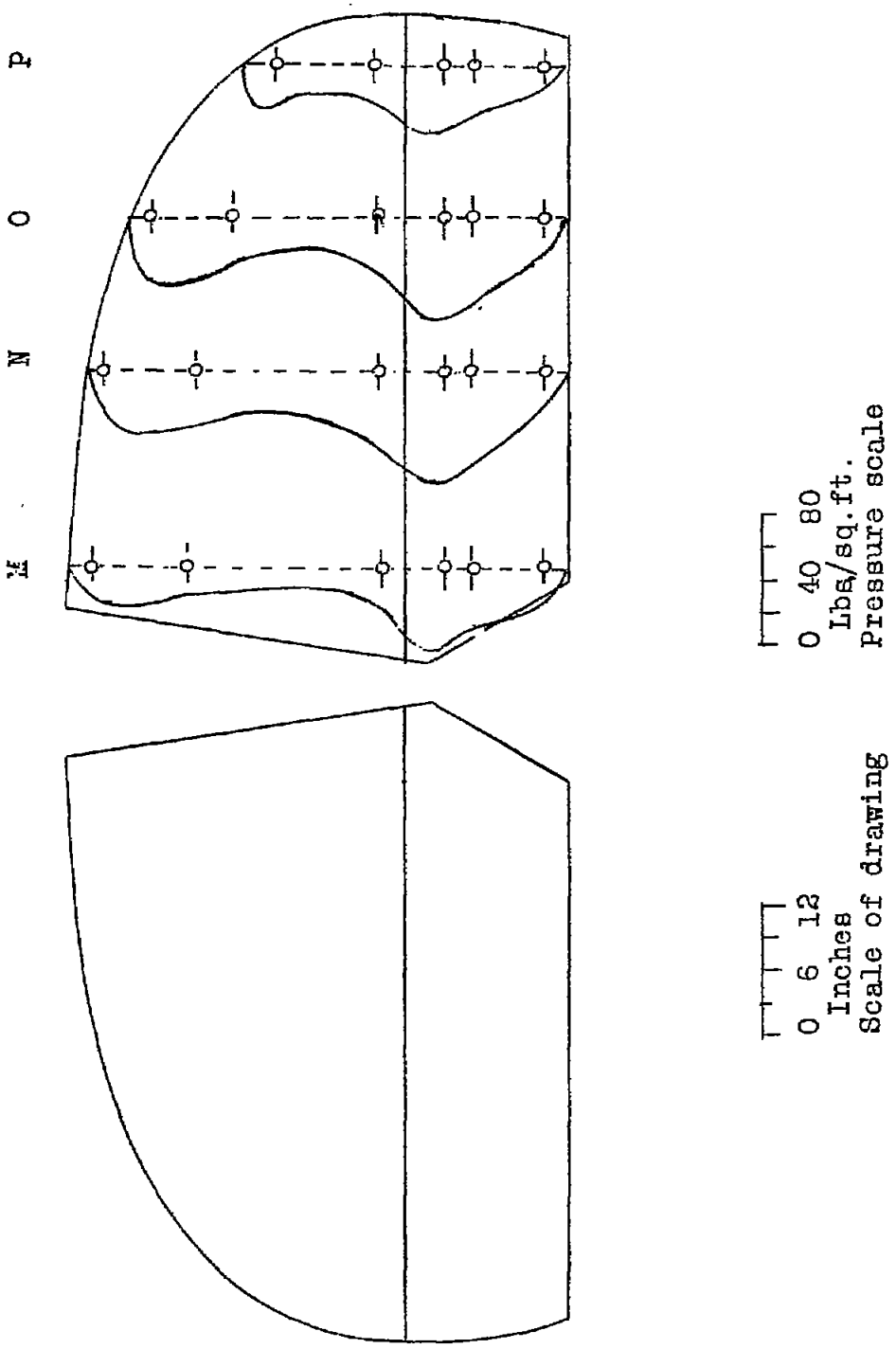

Fig. 8b Run No. 137; Power-on pull-up at 185 m.p.h.
Time interval .22 seconds; Maximum down load.

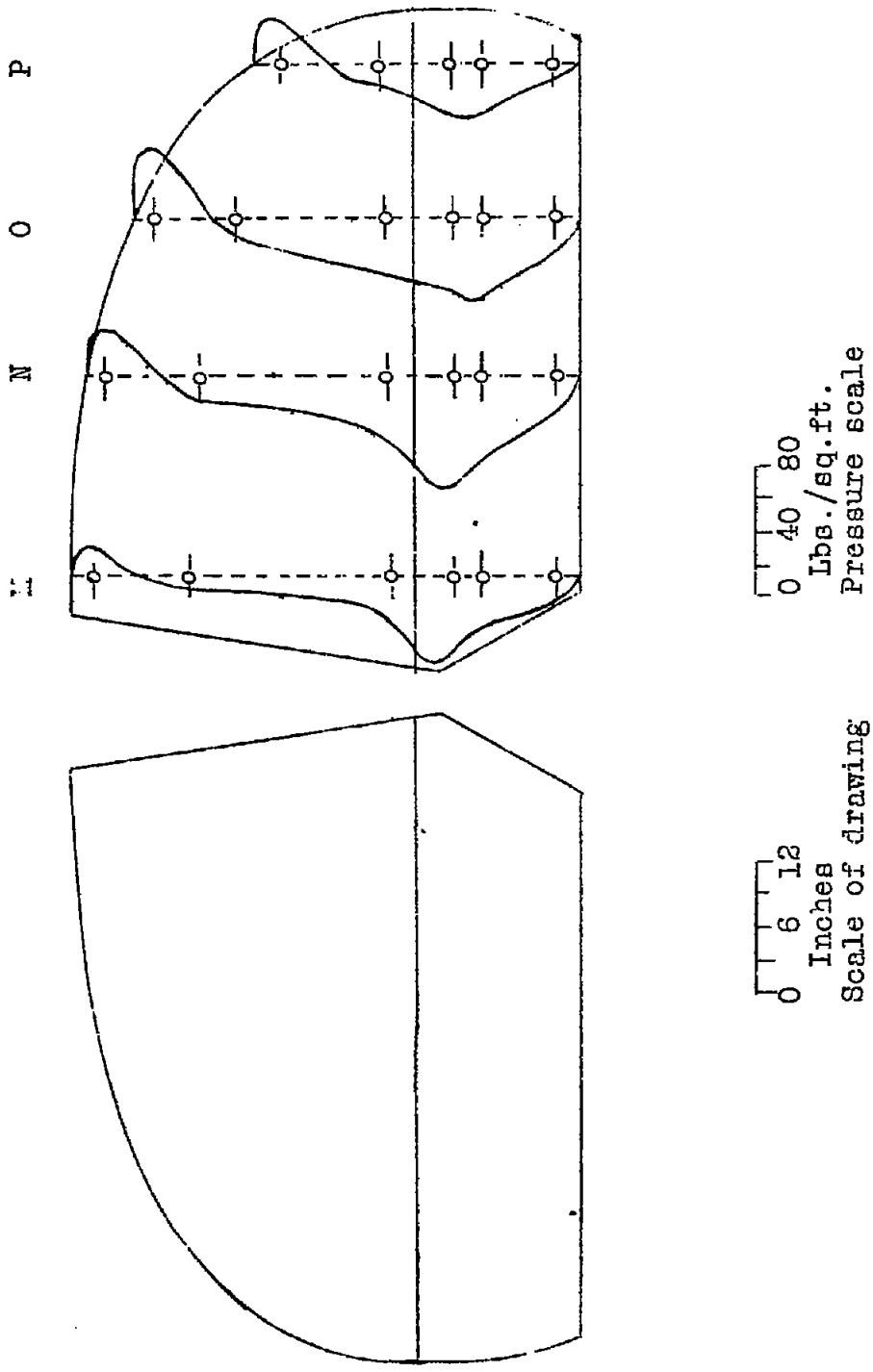

Fig. 8c Run No. 137; Power-on pull-up at 185 m.p.h.
Time interval .35 seconds.

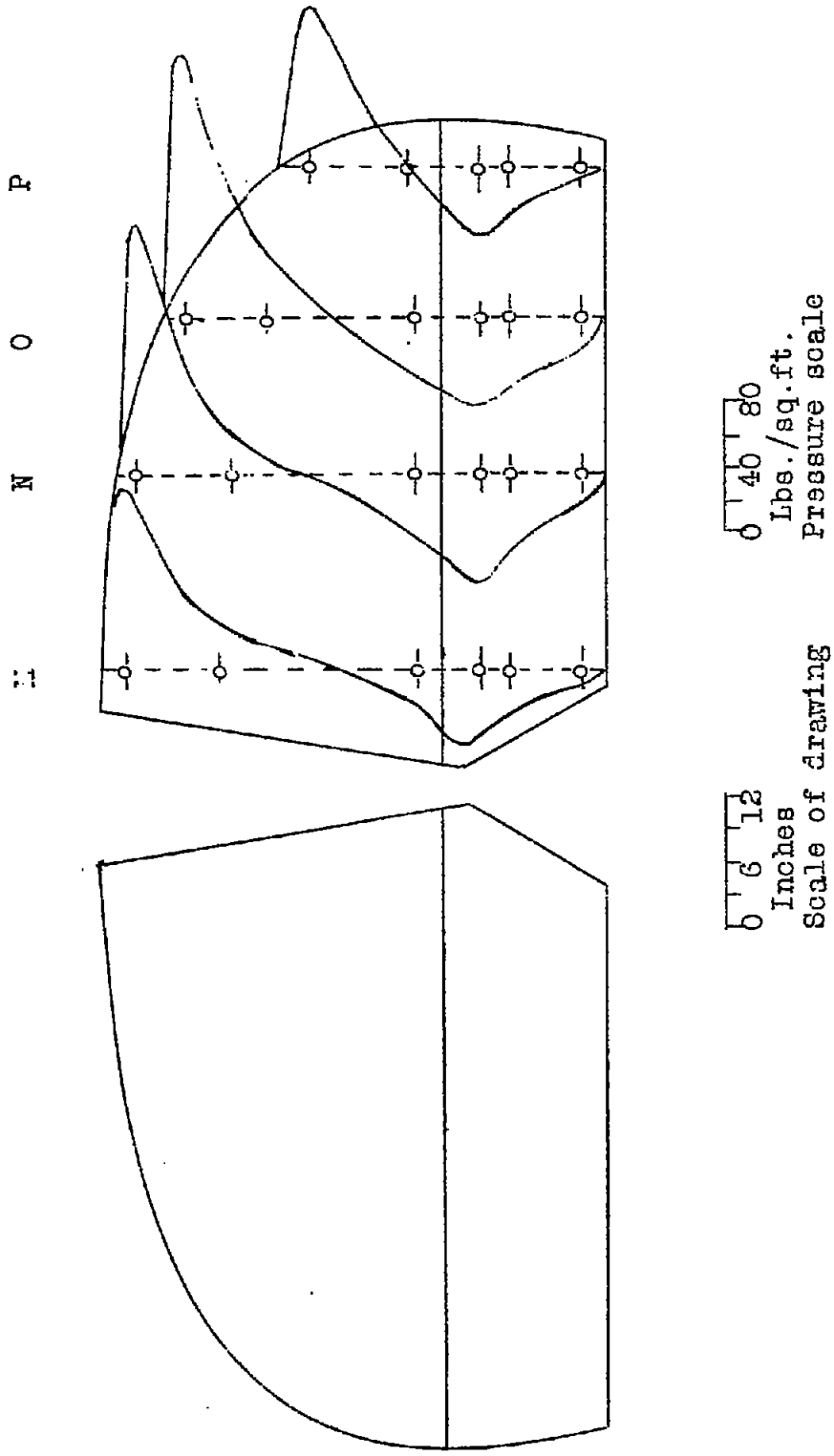

Fig. 8d Run No. 137; Power-on pull-up at 185 m.p.h.
Time interval .6 seconds.

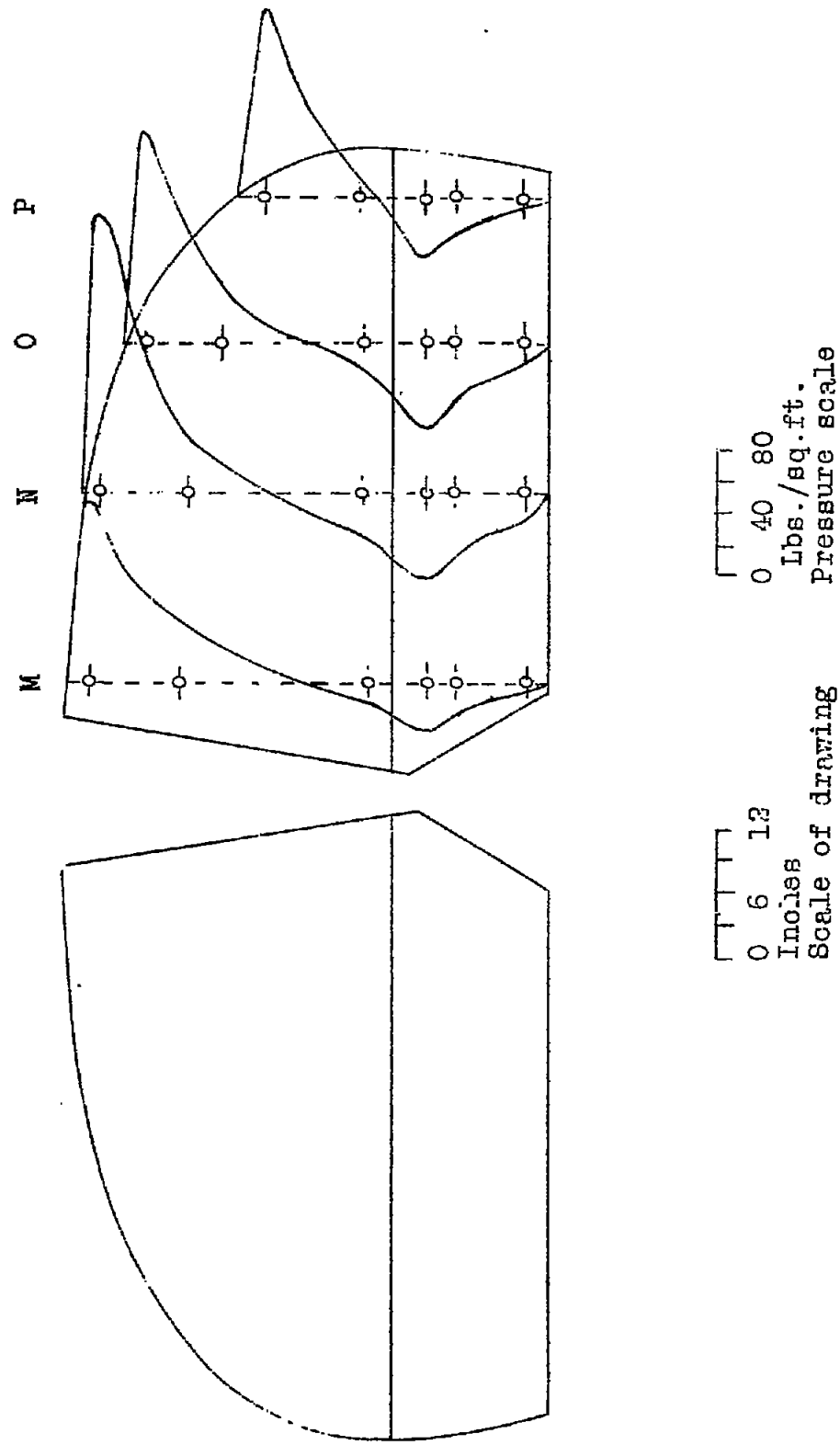

Fig. 8e Run No.137, Power-on pull-up at 185 m.p.h.
Time interval .76 seconds.

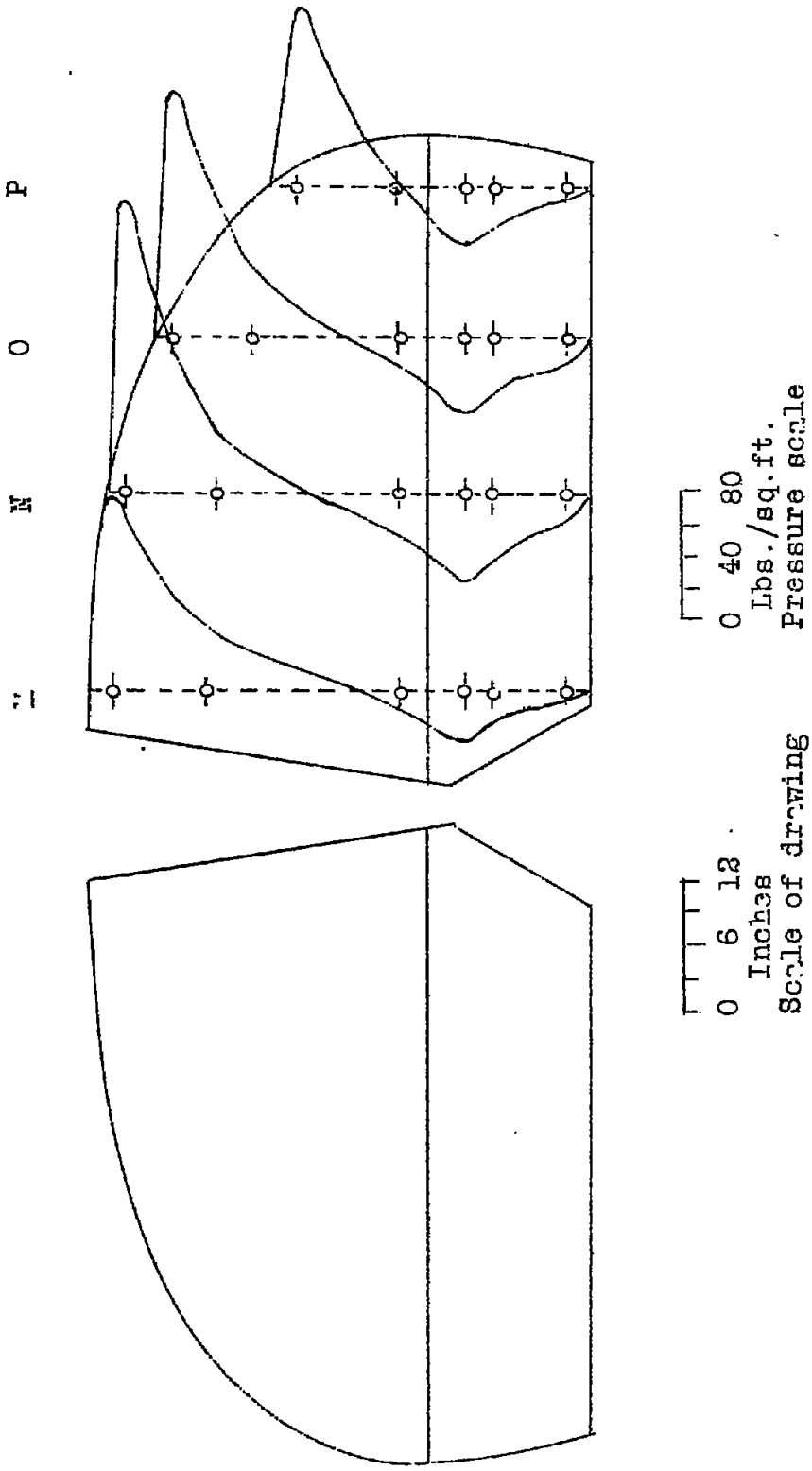

Fig. 8f Run No. 137; Prower-on pull-up at 185 m.p.h.
Time interval .85 seconds; Maximum up load.

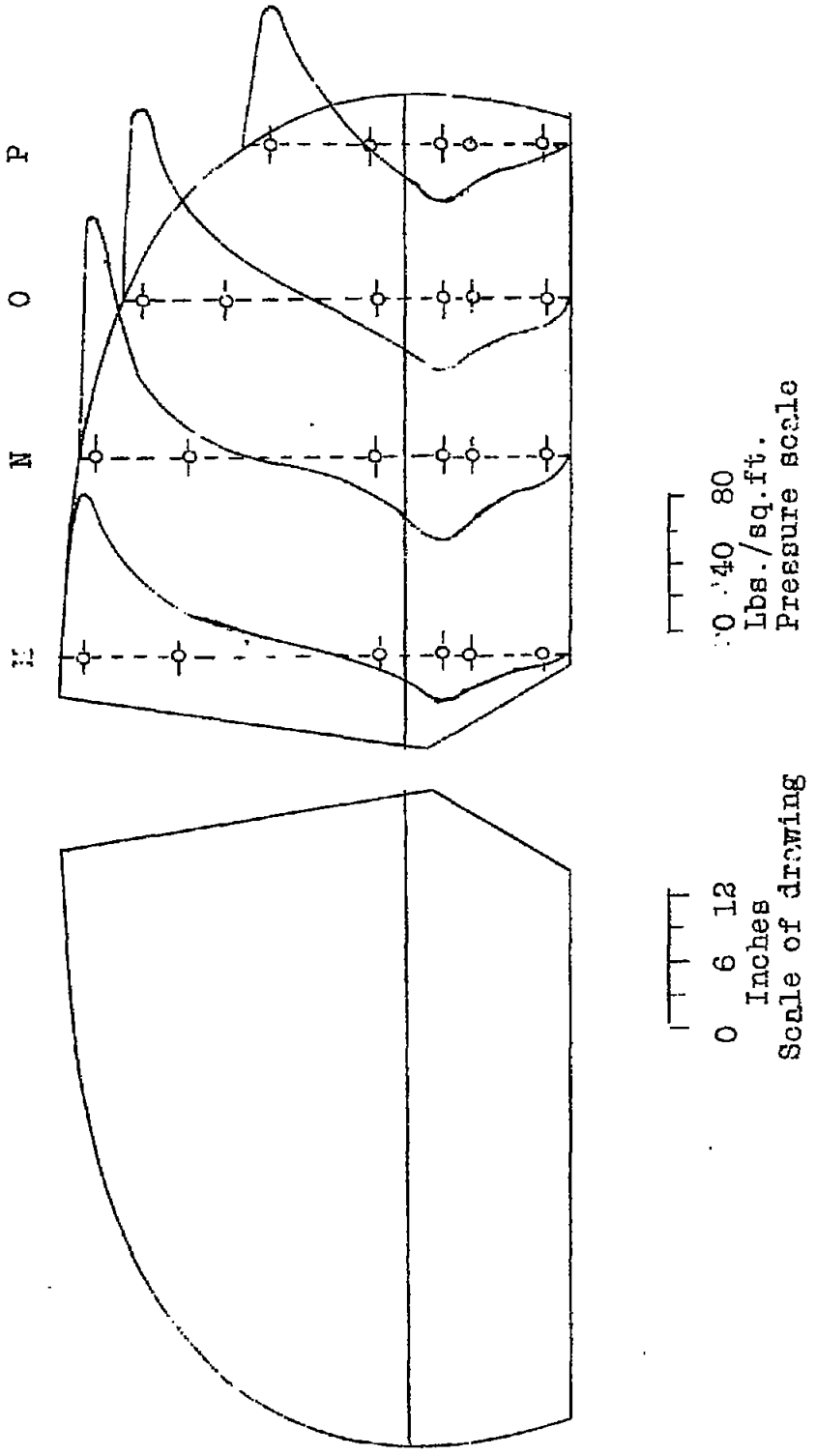

Fig. 8g Run No. 137; Power-on pull-up at 185 m.p.h.
Time interval 1.1 seconds.

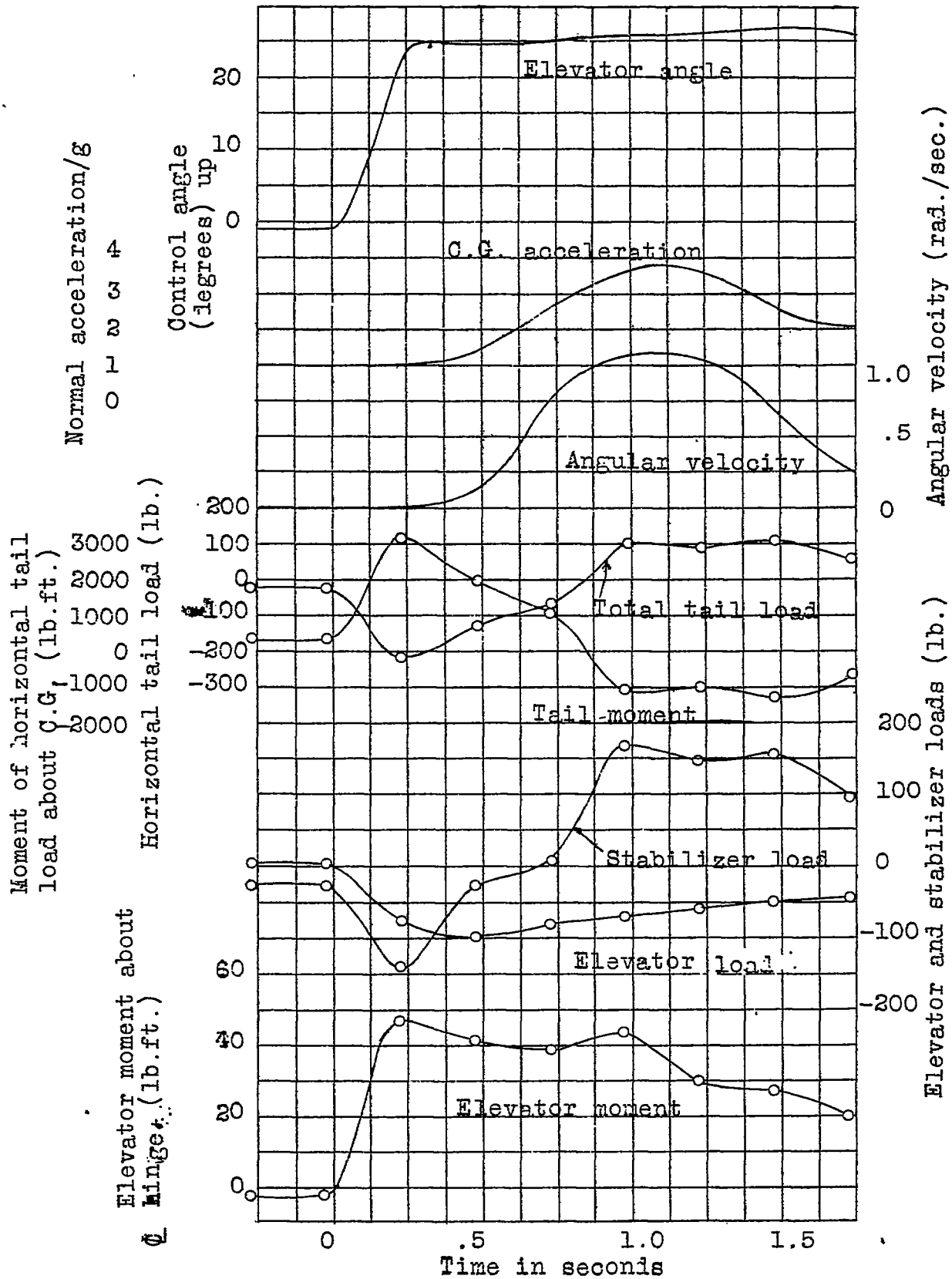

Fig. 9 History of an abrupt power-on pull-up at 116 m.p.h. (Run No. 130.)

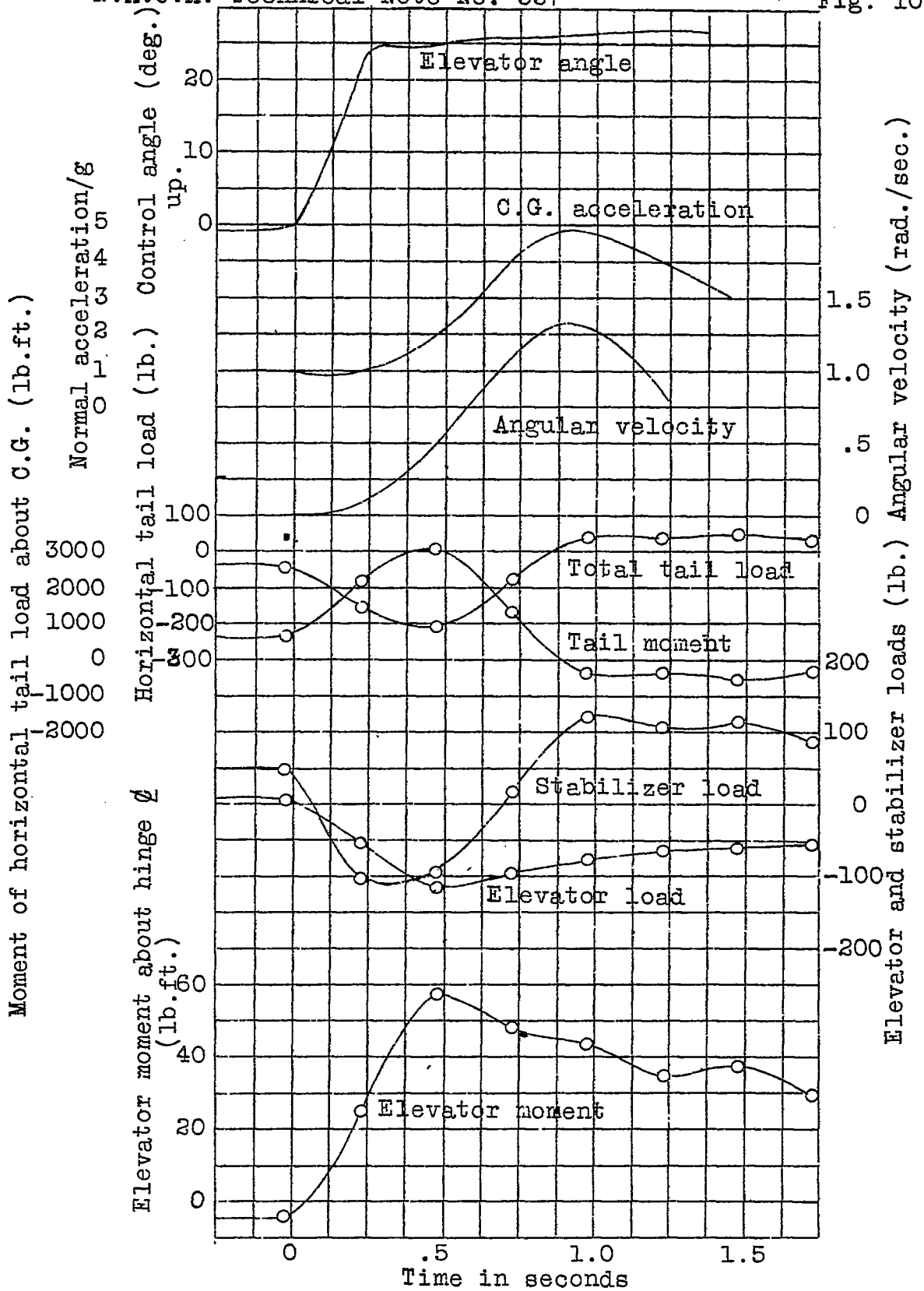

Fig. 10 History of an abrupt power-on pull-up at 137 m.p.h. (Run No. 132)

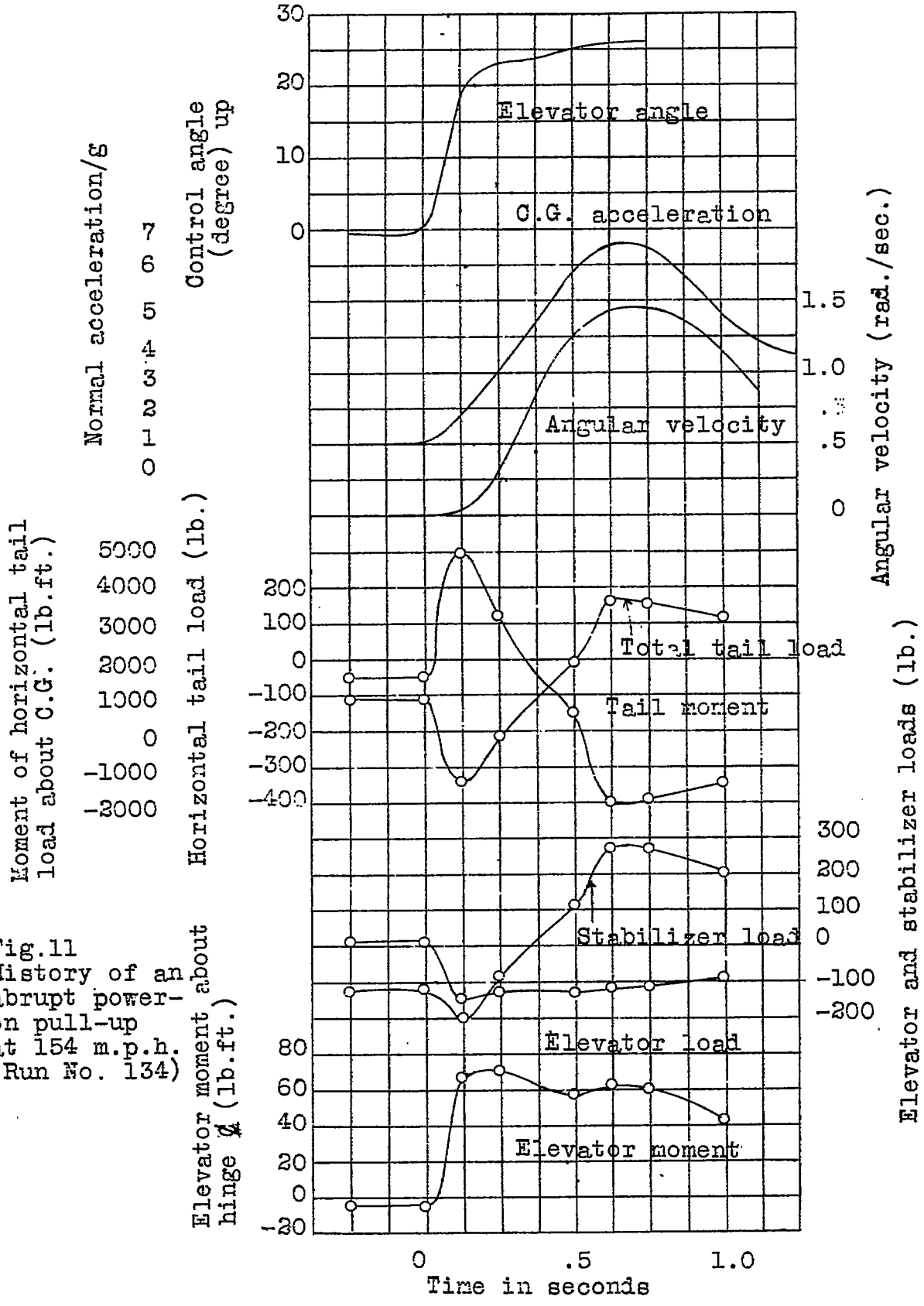

Fig.11
History of an abrupt power-on pull-up at 154 m.p.h. (Run No. 134)

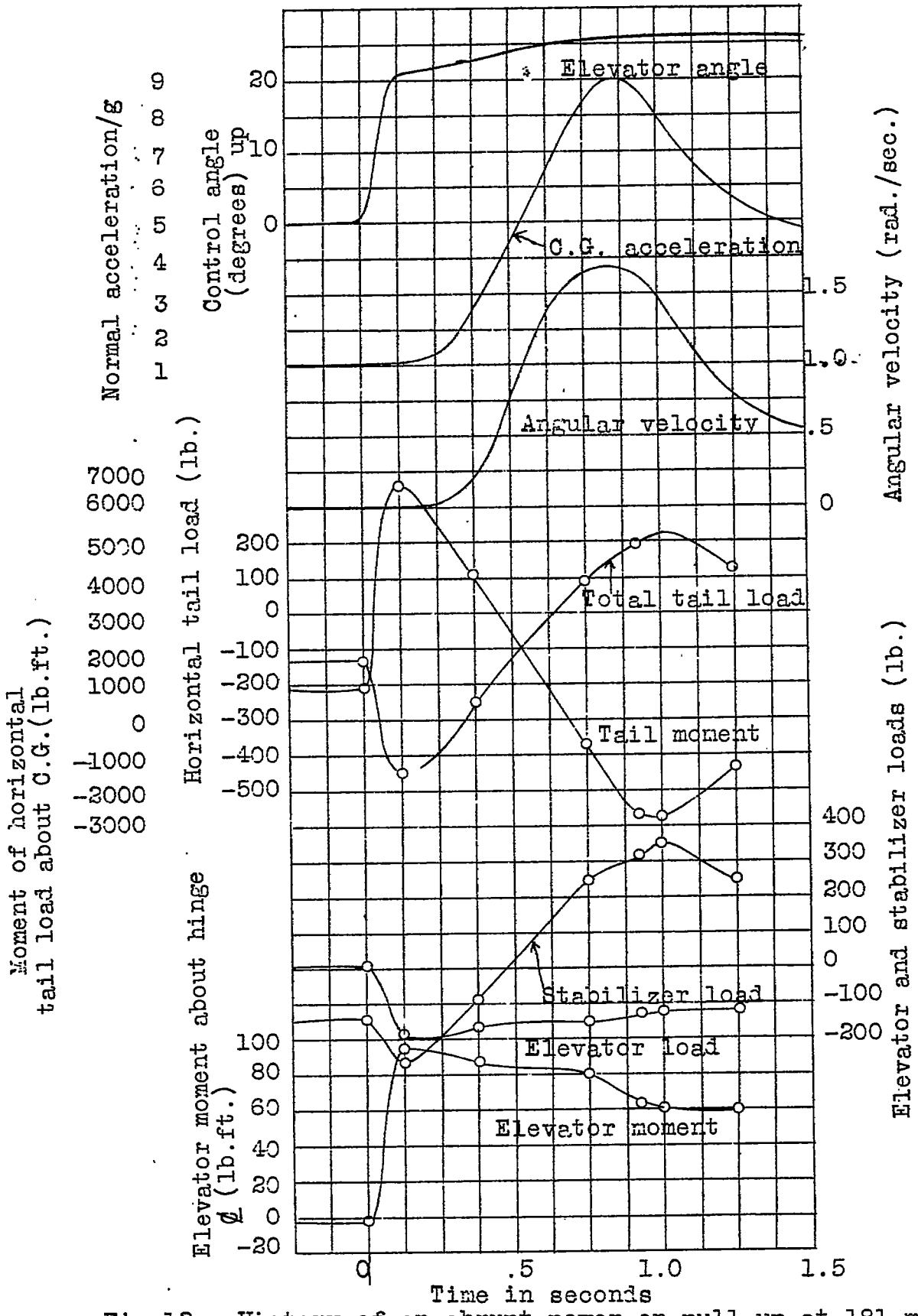

Fig.12 History of an abrupt power-on pull-up at 181 m.p.h. (Run No. 137.)

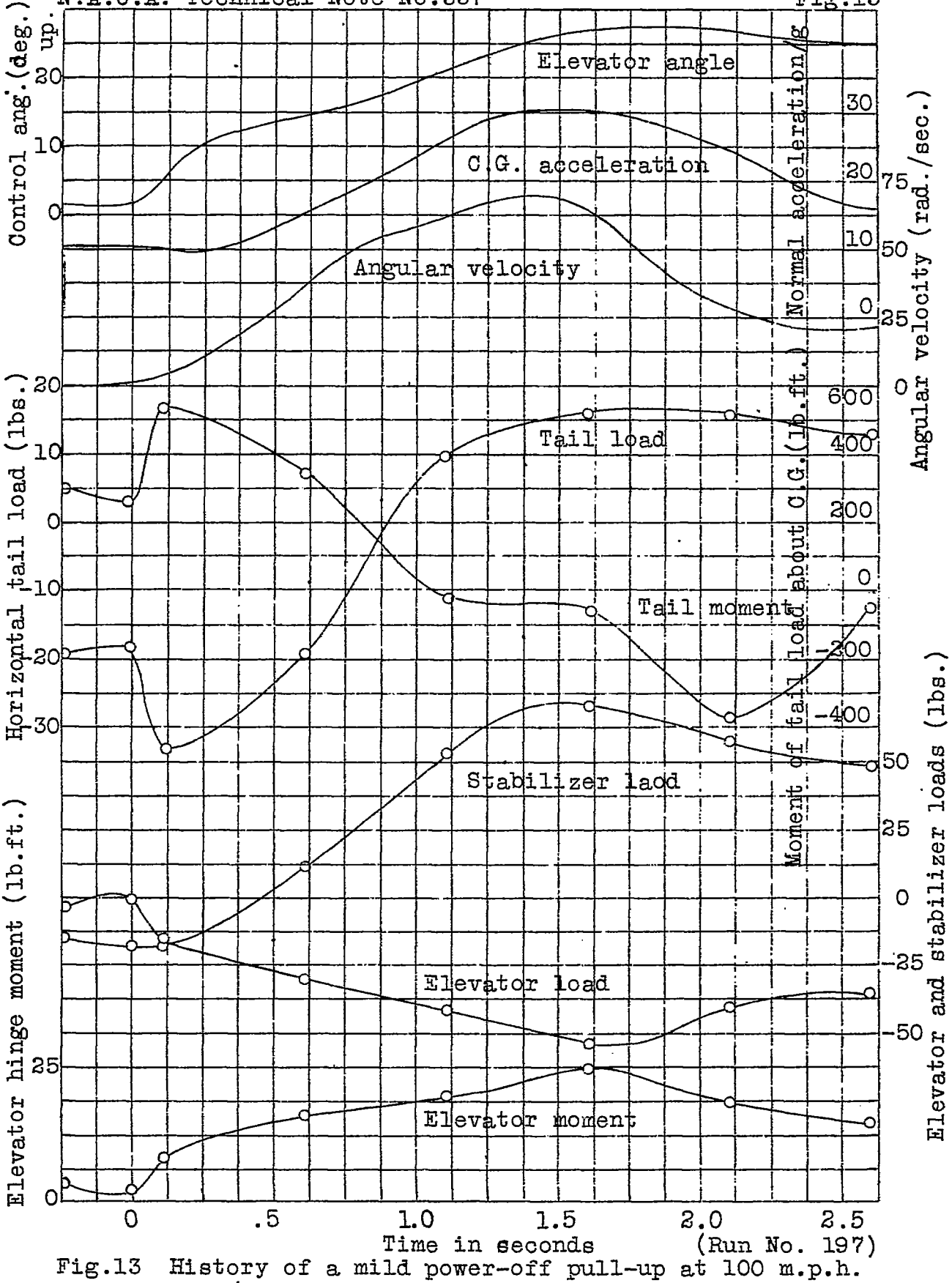

Fig.13 History of a mild power-off pull-up at 100 m.p.h.

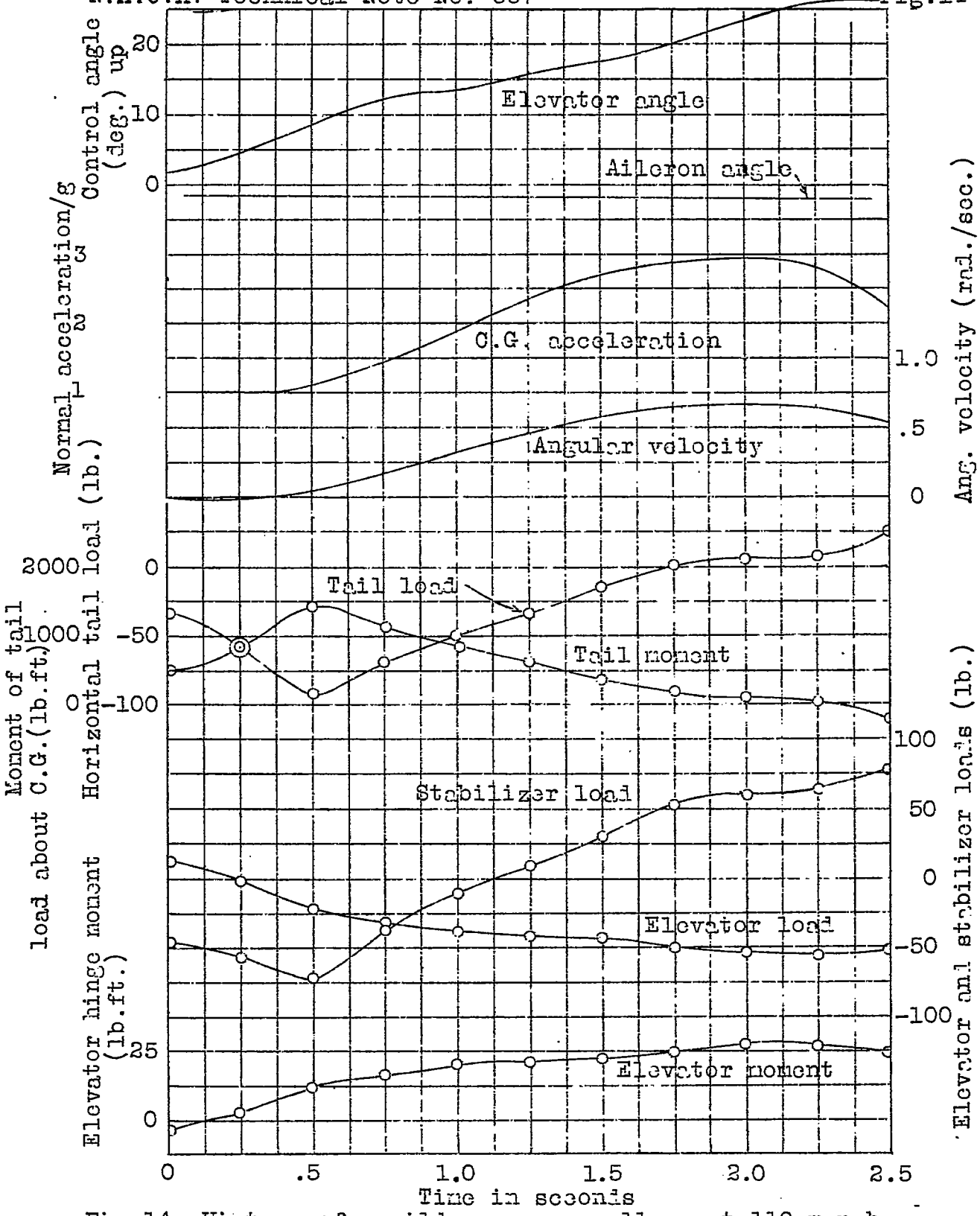

Fig.14 History of a mild power-on pull-up at 110 m.p.h. (Run No.75)

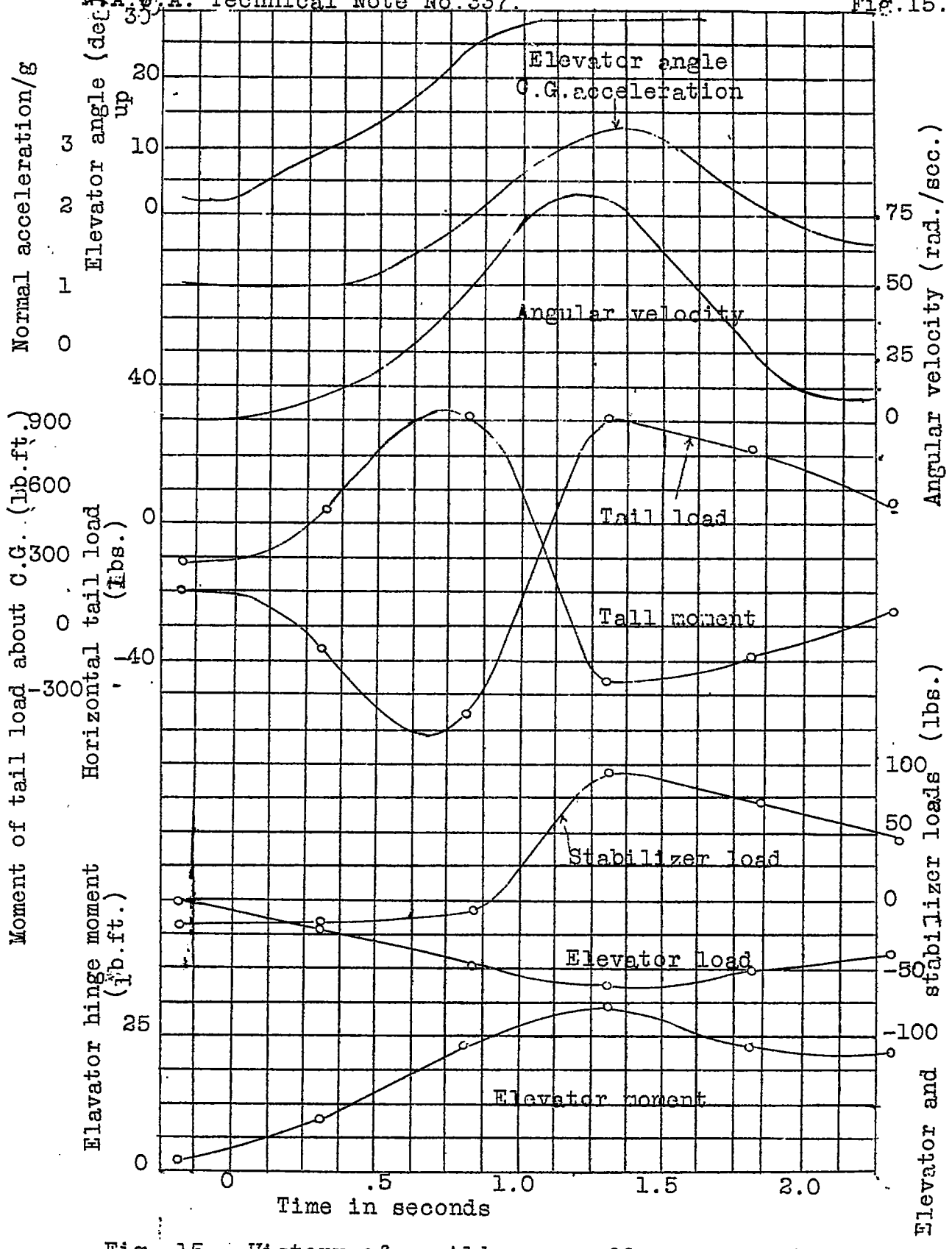

Fig. 15 History of a mild power-off, pull-up at 109 m.p.h. Run No. 198.

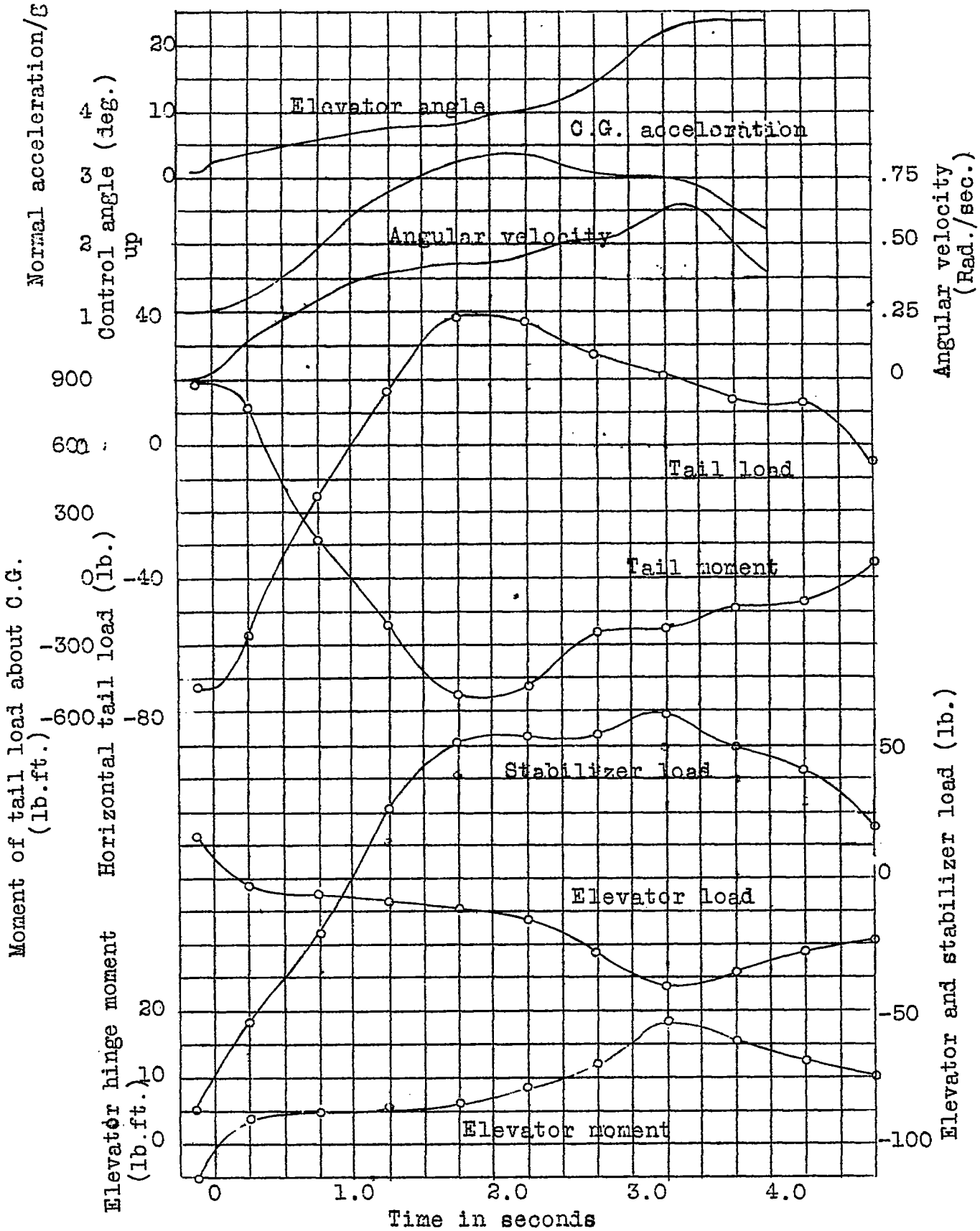

Fig.16 History of a mild , power-off pull-up at 138 m.p.h. (Run No.207.)

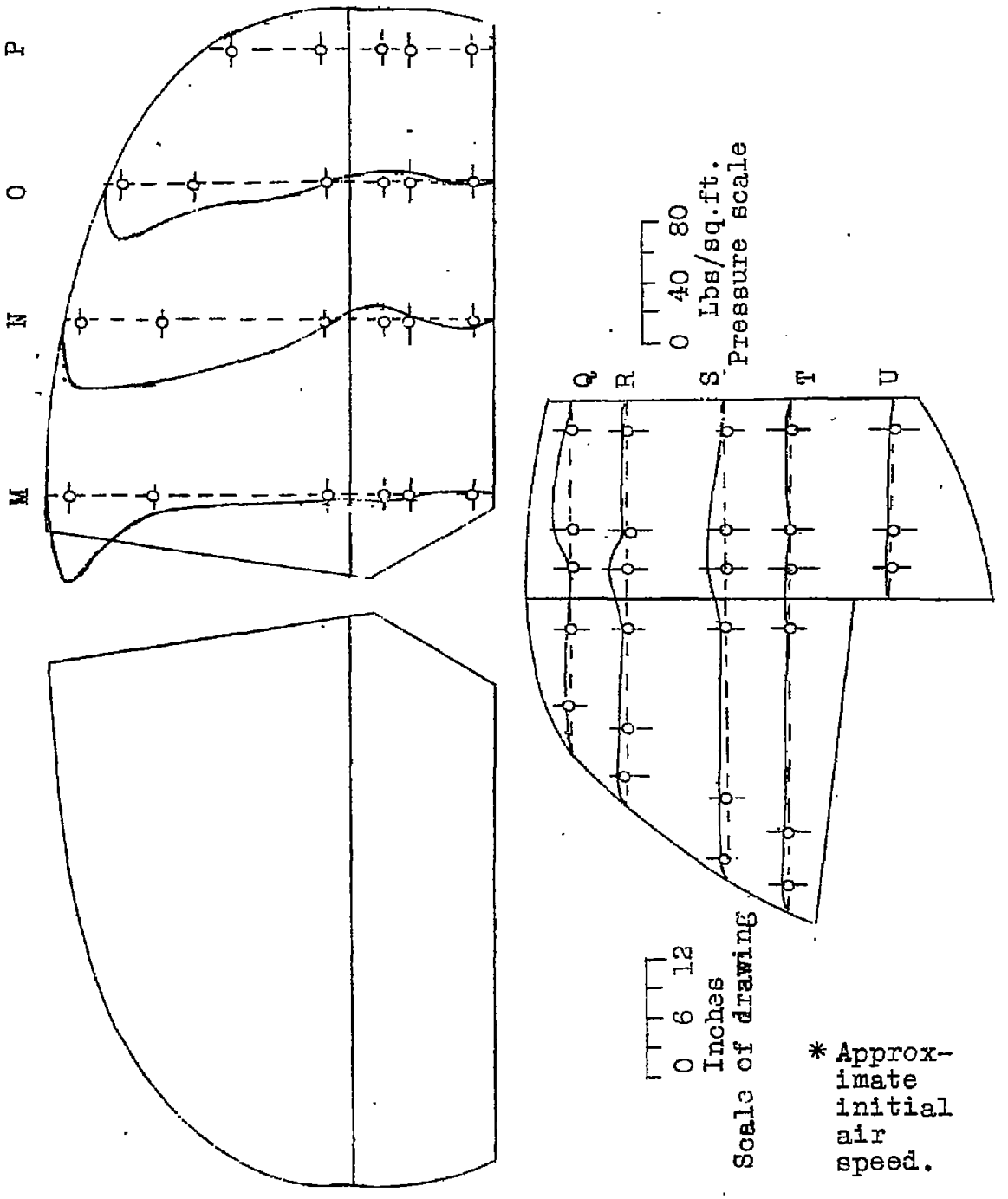

Fig. 17a Run No. 222; Right barrel roll at 170*m.p.h.
Time interval -.35 seconds.

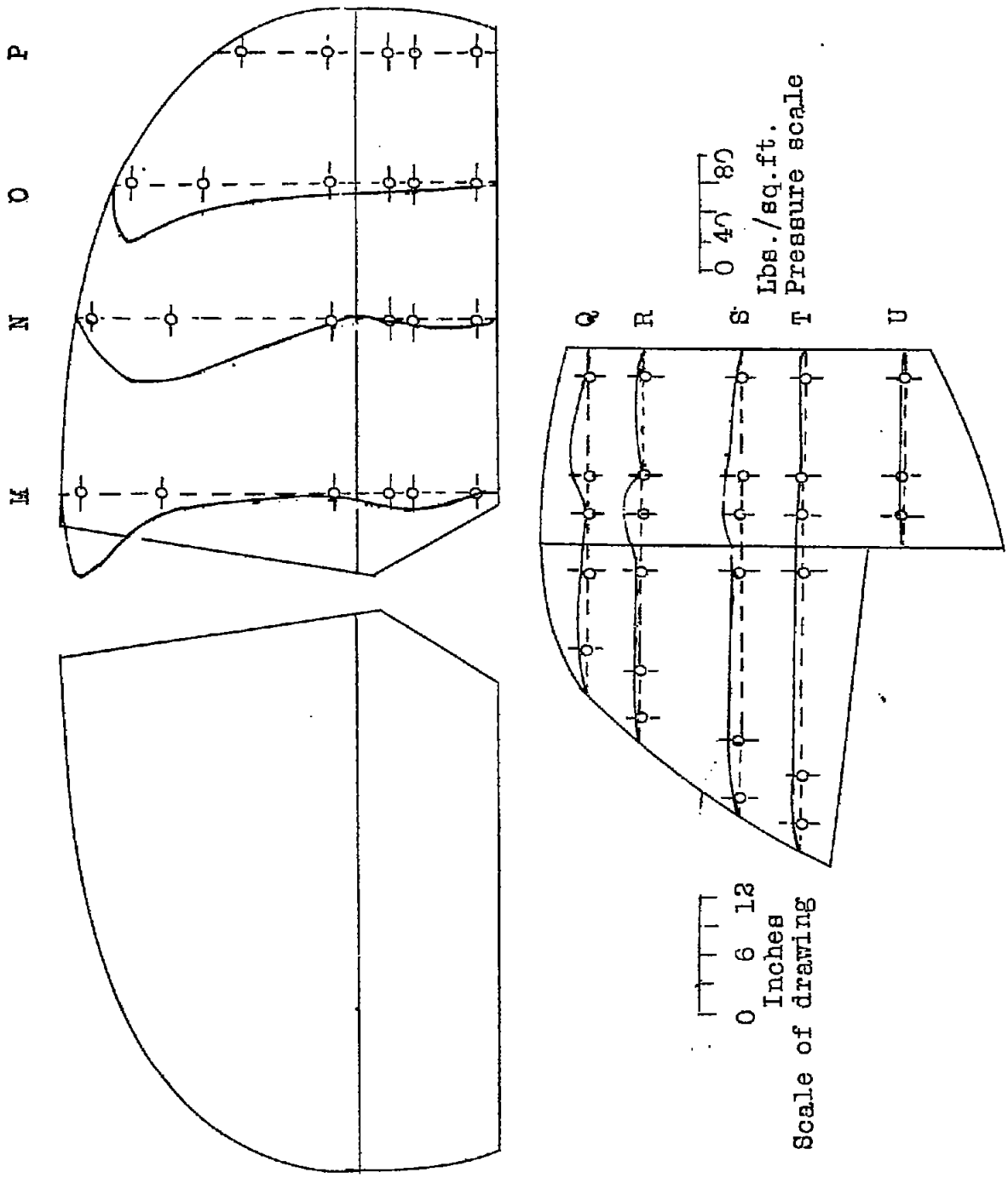

Fig. 17b Run No. 222; Right barrel roll. Time interval 0 seconds.

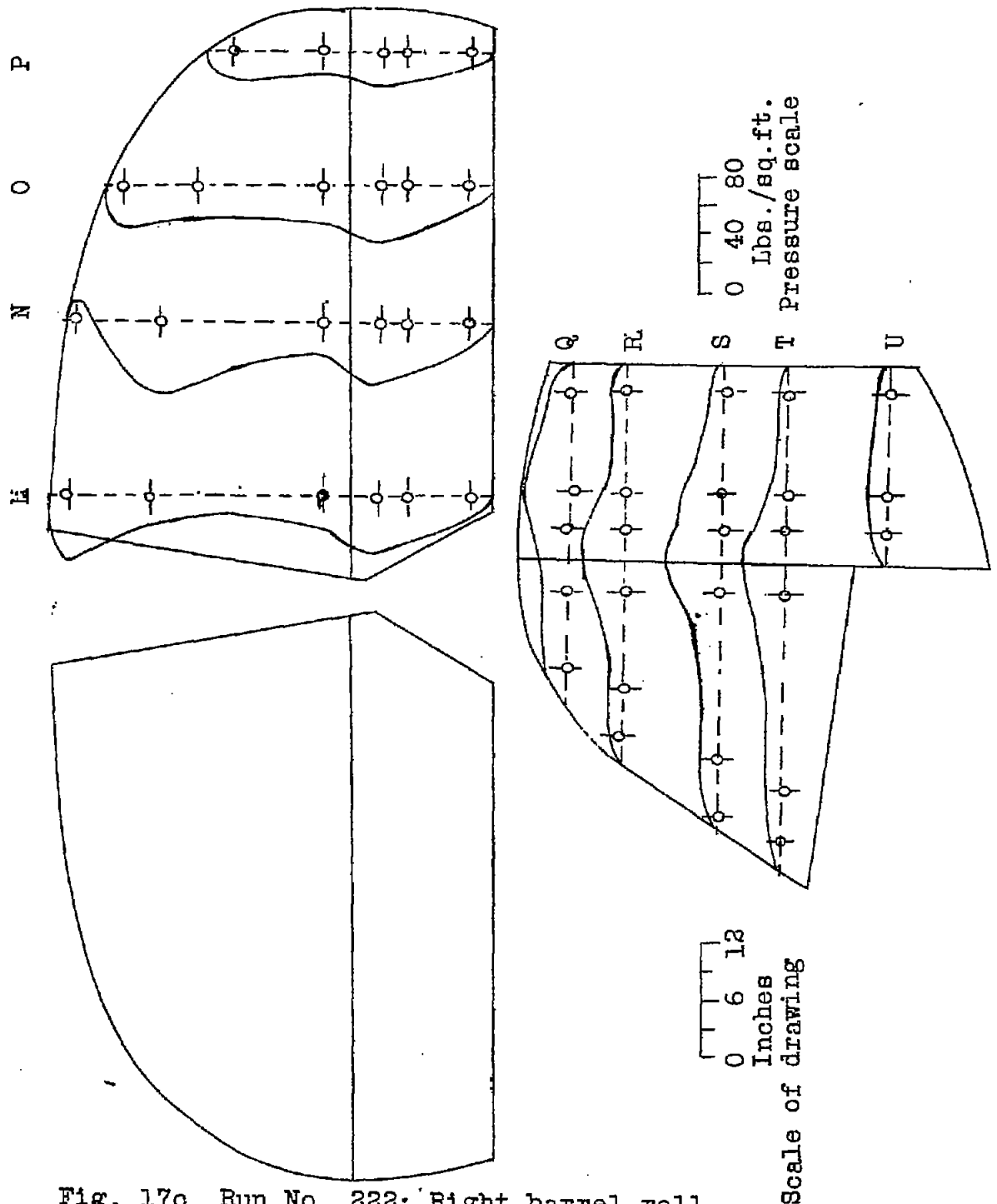

Fig. 17c Run No. 222; Right barrel roll
Time interval .25 seconds. Maximum down load on horizontal surfaces.

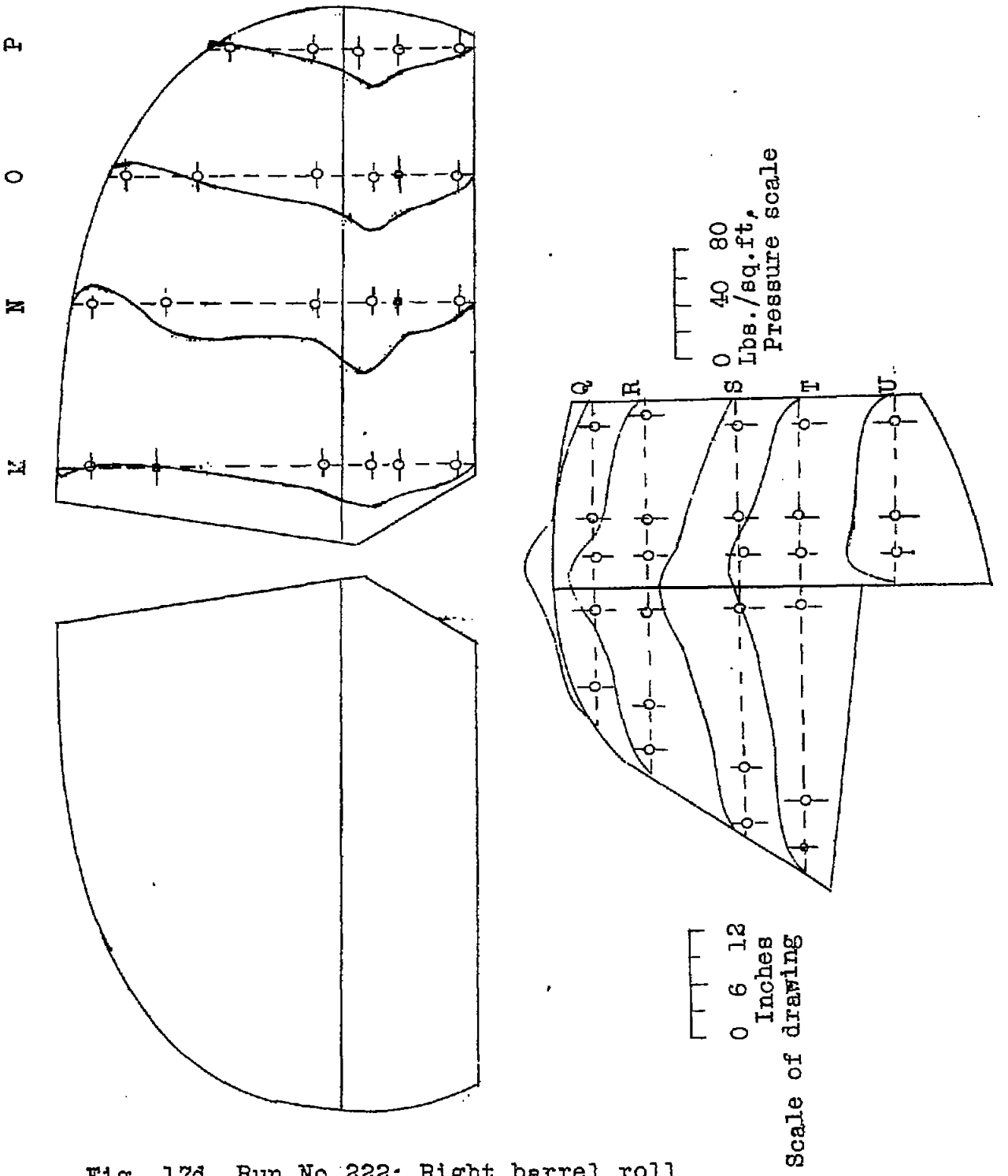

Fig. 17d Run No.222; Right barrel roll
Time interval .50 seconds. Maximum load on vertical tail surfaces.

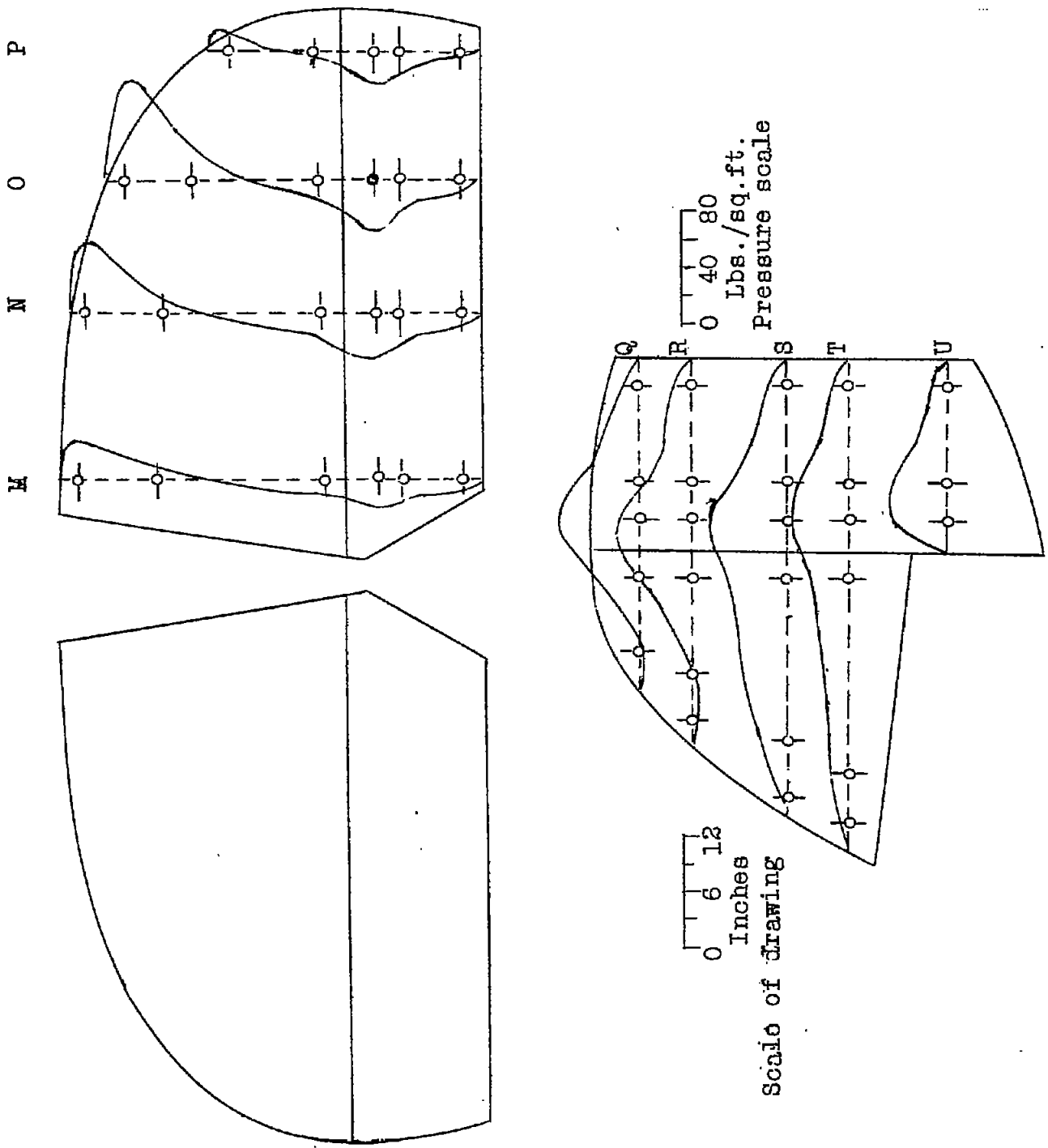

Fig. 17e Run No. 232; Right barrel roll.
Time interval .75 seconds.

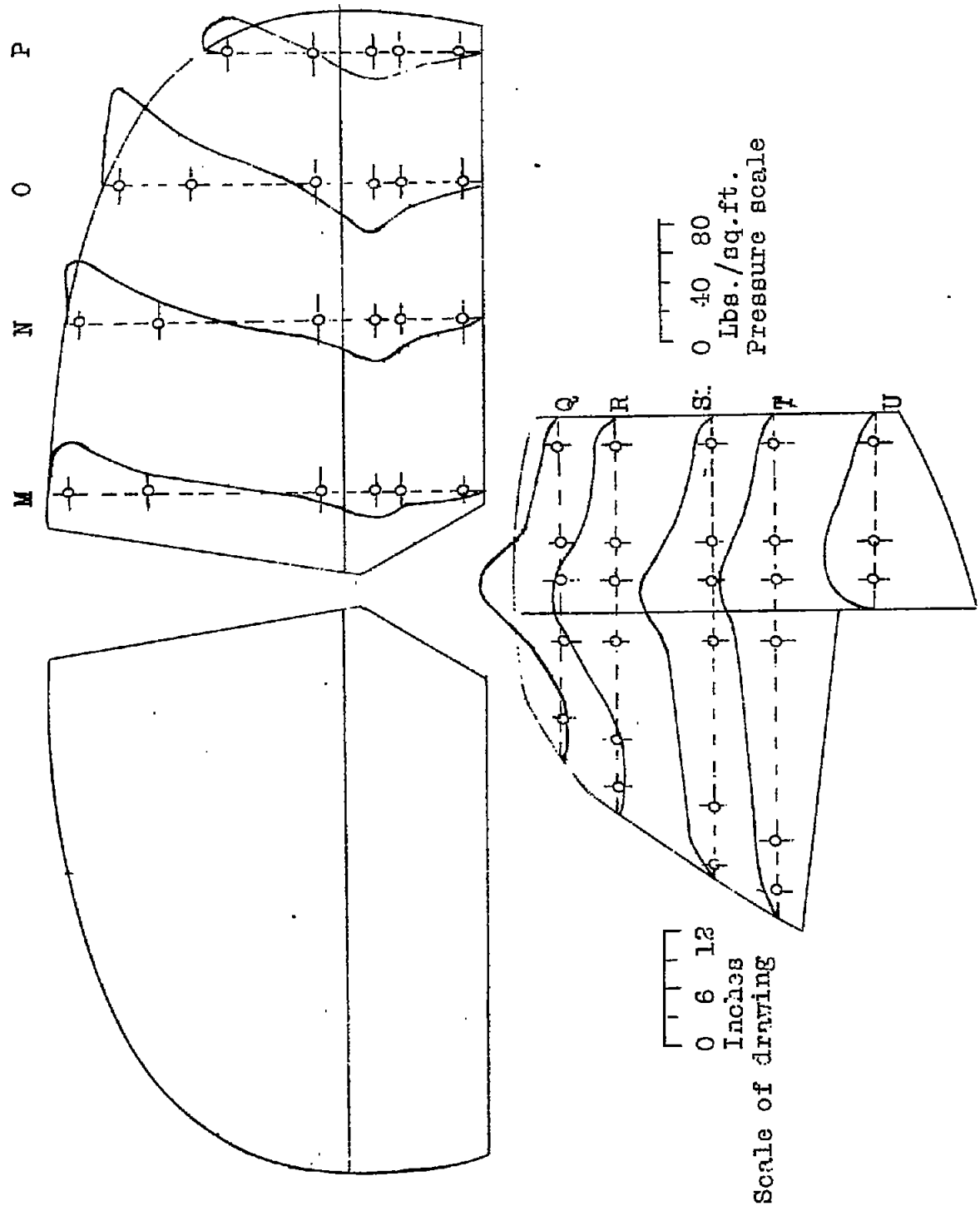

Fig. 17f Run No. 222; Right barrel roll.
Time interval .875 seconds.

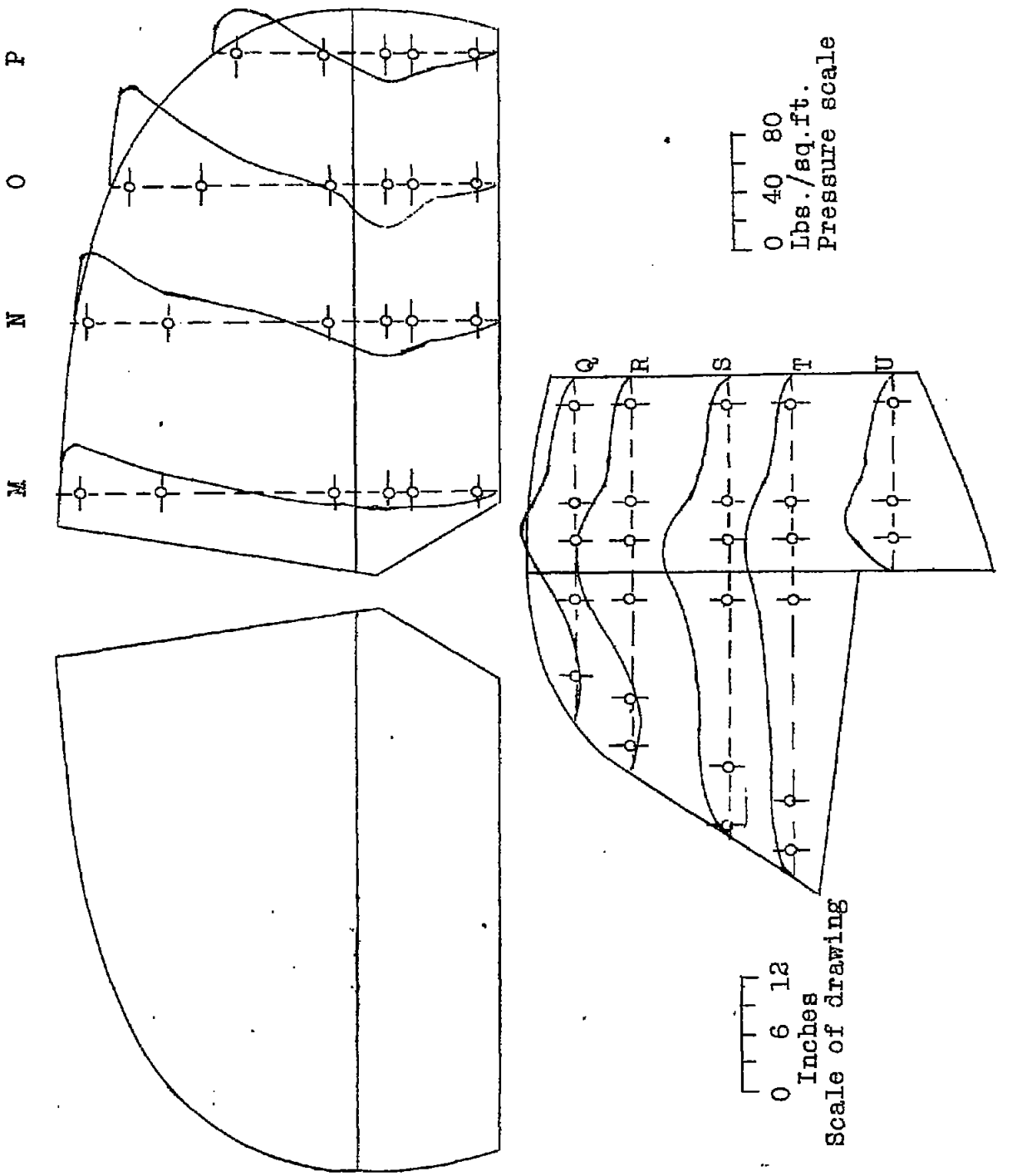

Fig. 17g Run No. 222; Right barrel roll.
Time interval 1 seconds.

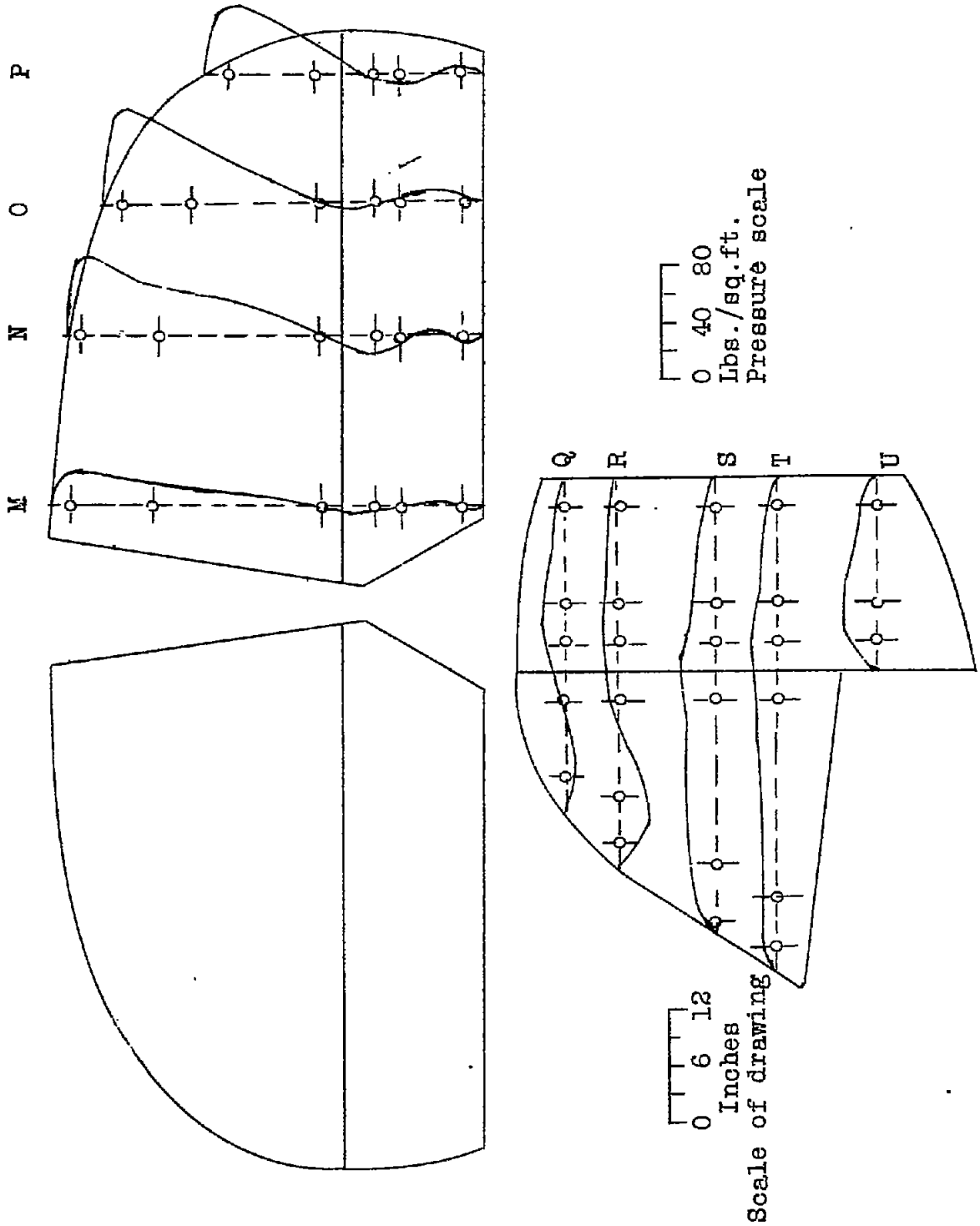

Fig. 17h Run No. 222; Right barrel roll.
Time interval 1.50 seconds.

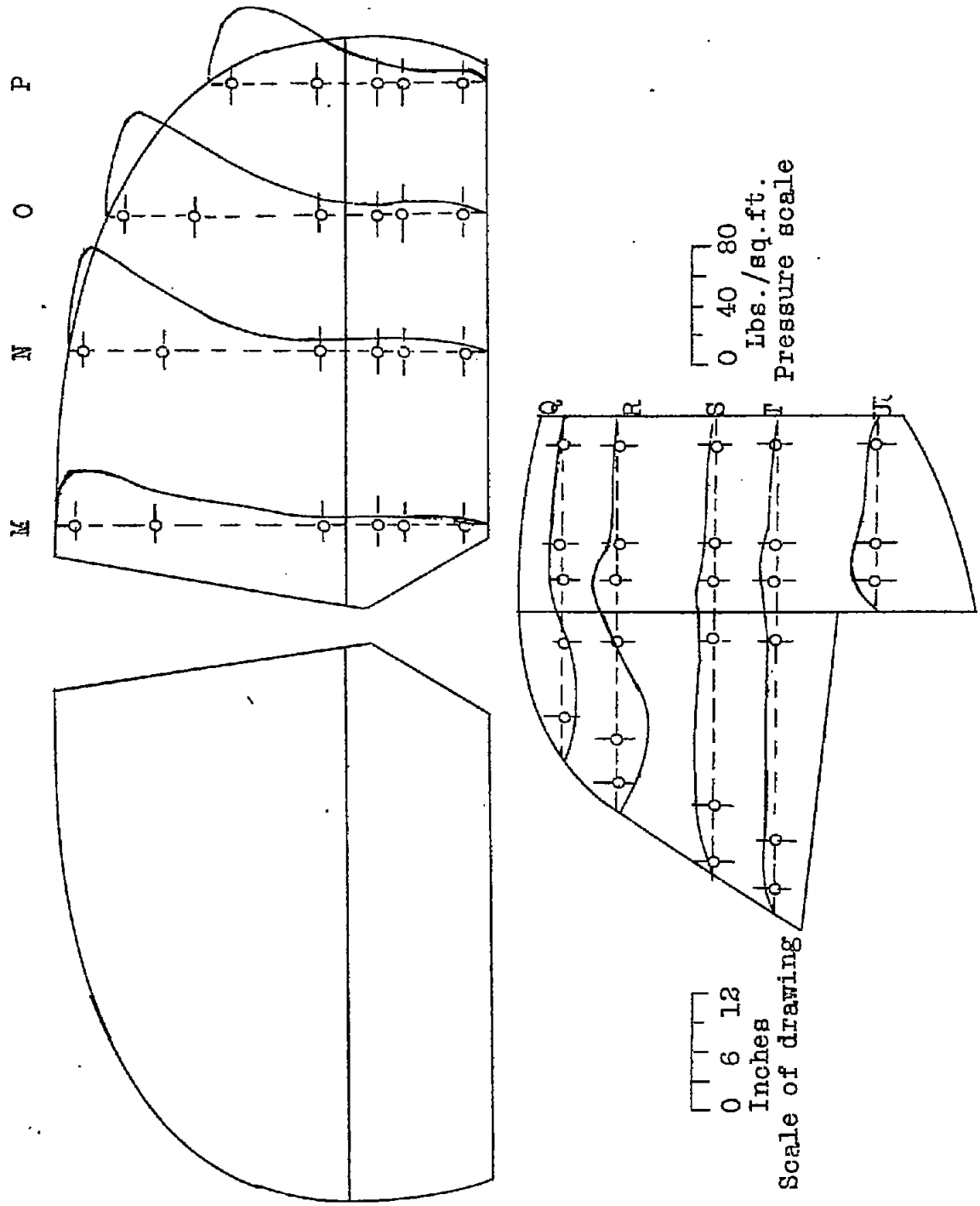

Fig. 17i Run No. 222; Right barrel roll.
Time interval 2 seconds.

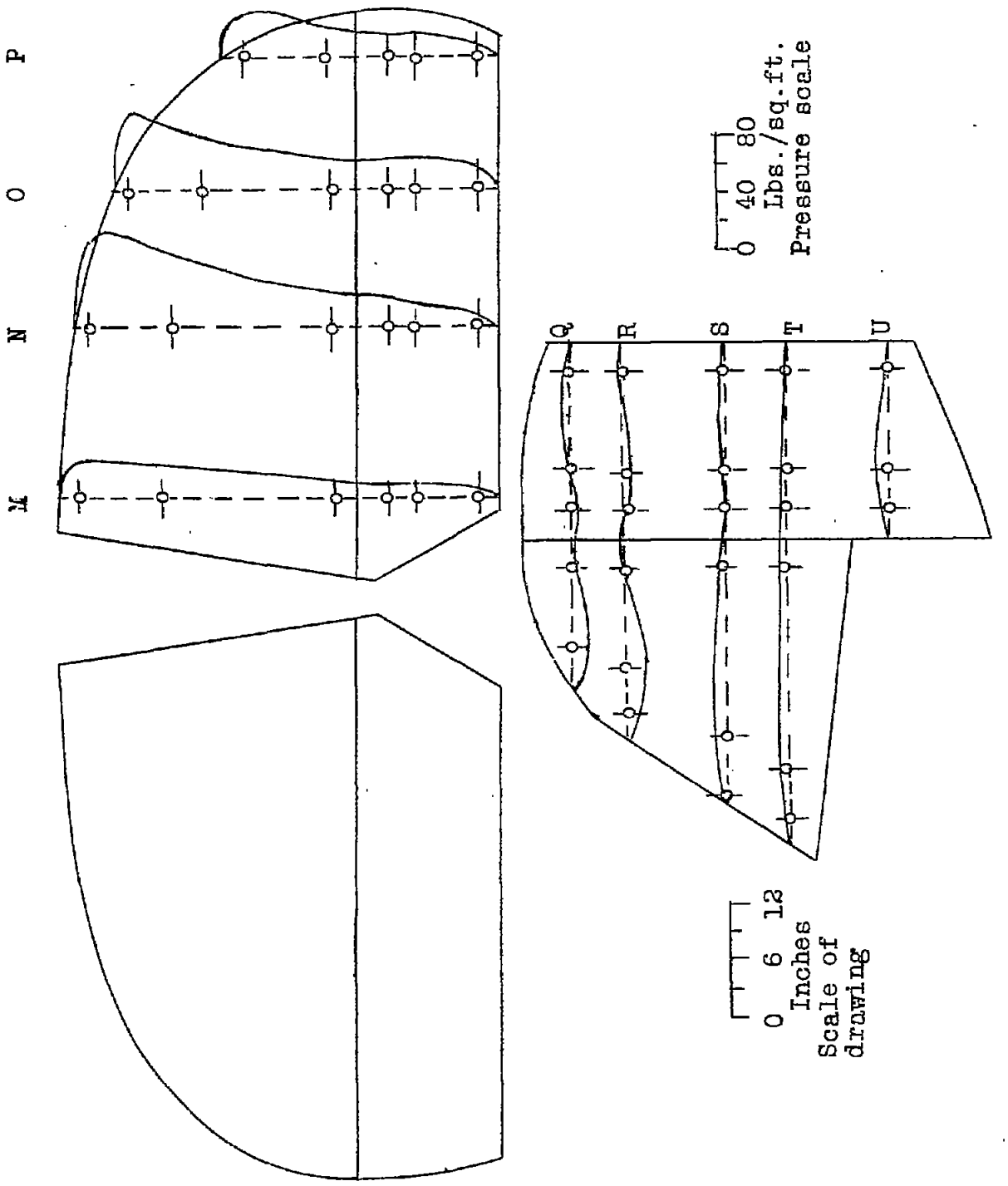

Fig. 17j Run No. 222; Right barrel roll.
Time interval 2.5 seconds. Maximum up load on horizontal surfaces. (Right side only)

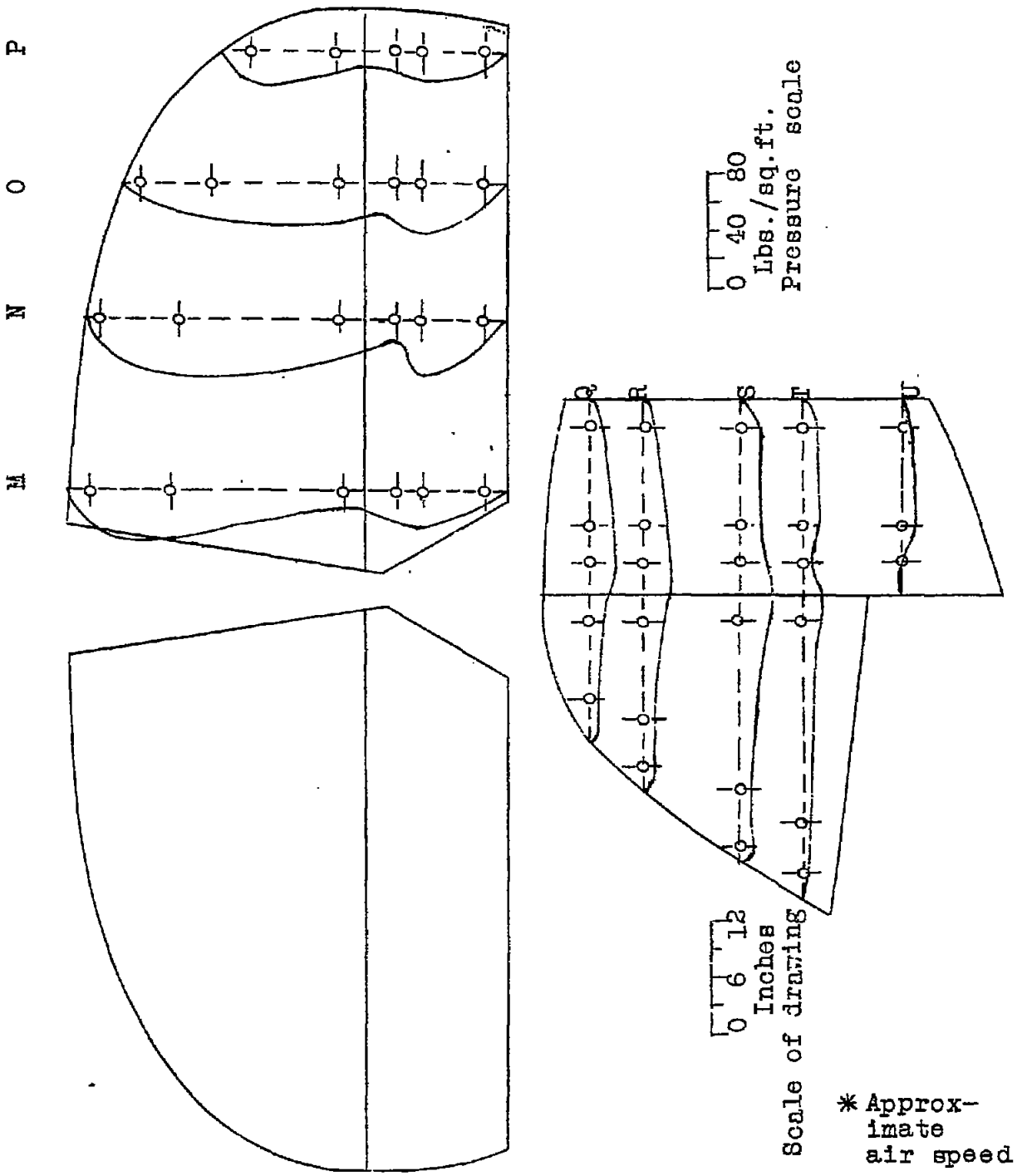

Fig. 18a Run No. 225; Left barrel roll at 170* m.p.h.
Maximum down load on horizontal surfaces.

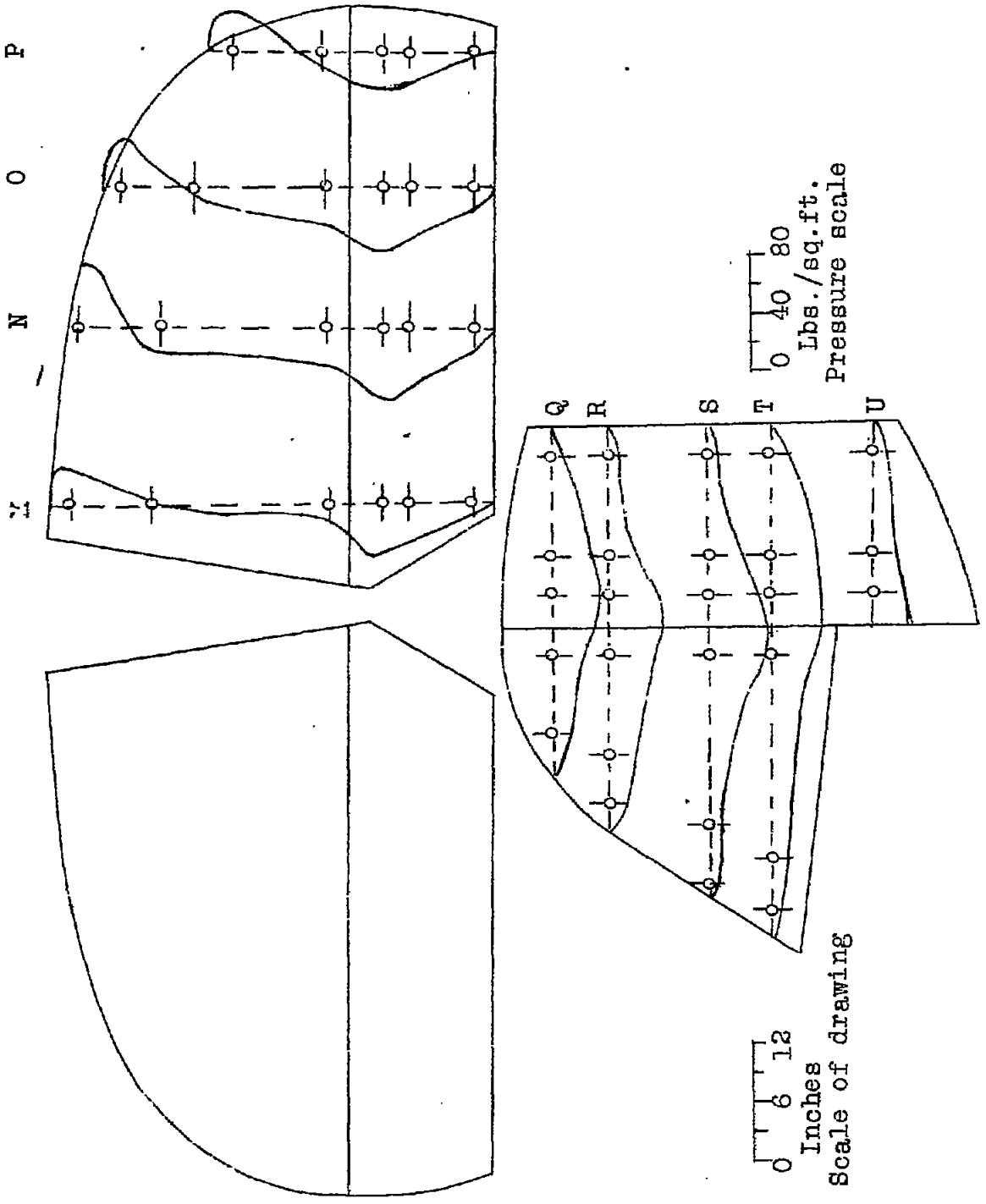

Fig. 18b Run No. 225; Left barrel roll.
Maximum load on vertical surfaces.

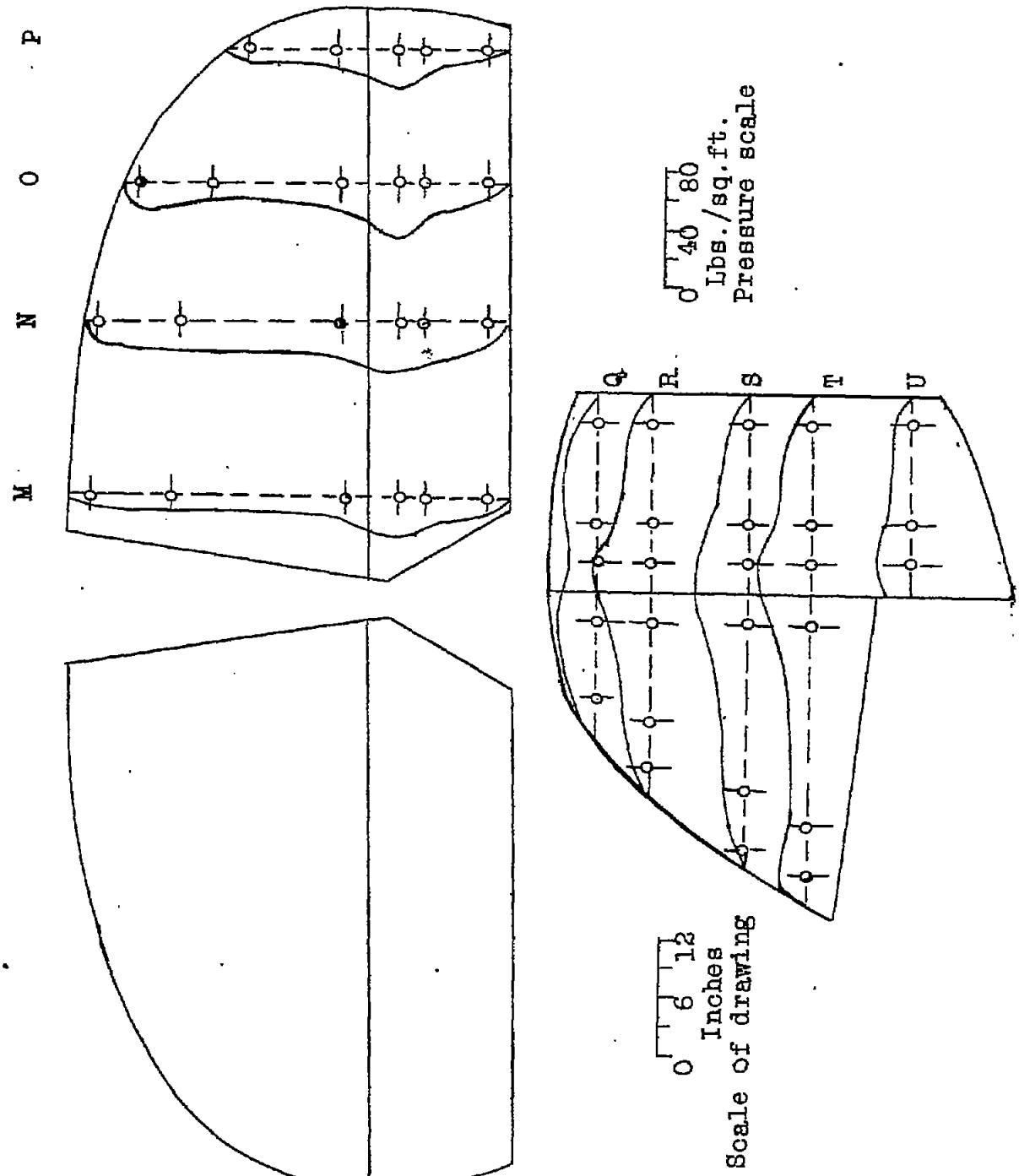

Fig. 19a Run No. 220; Right roll at 126 m.p.h. Maximum down load on horizontal surfaces; maximum load on vertical surfaces.

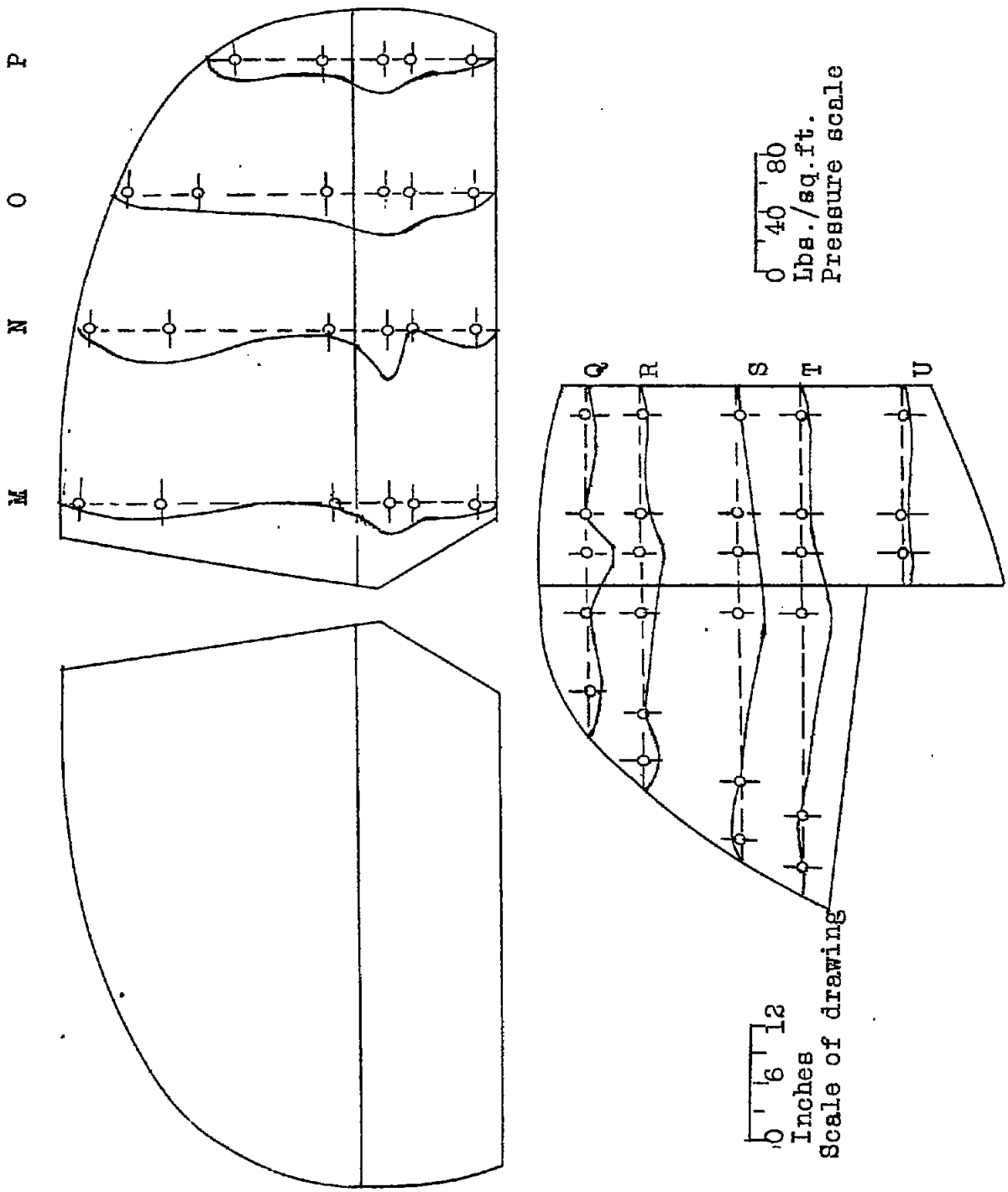

Fig. 20a Run No. 223; Left roll at 120.5 m.p.h. Maximum down load.

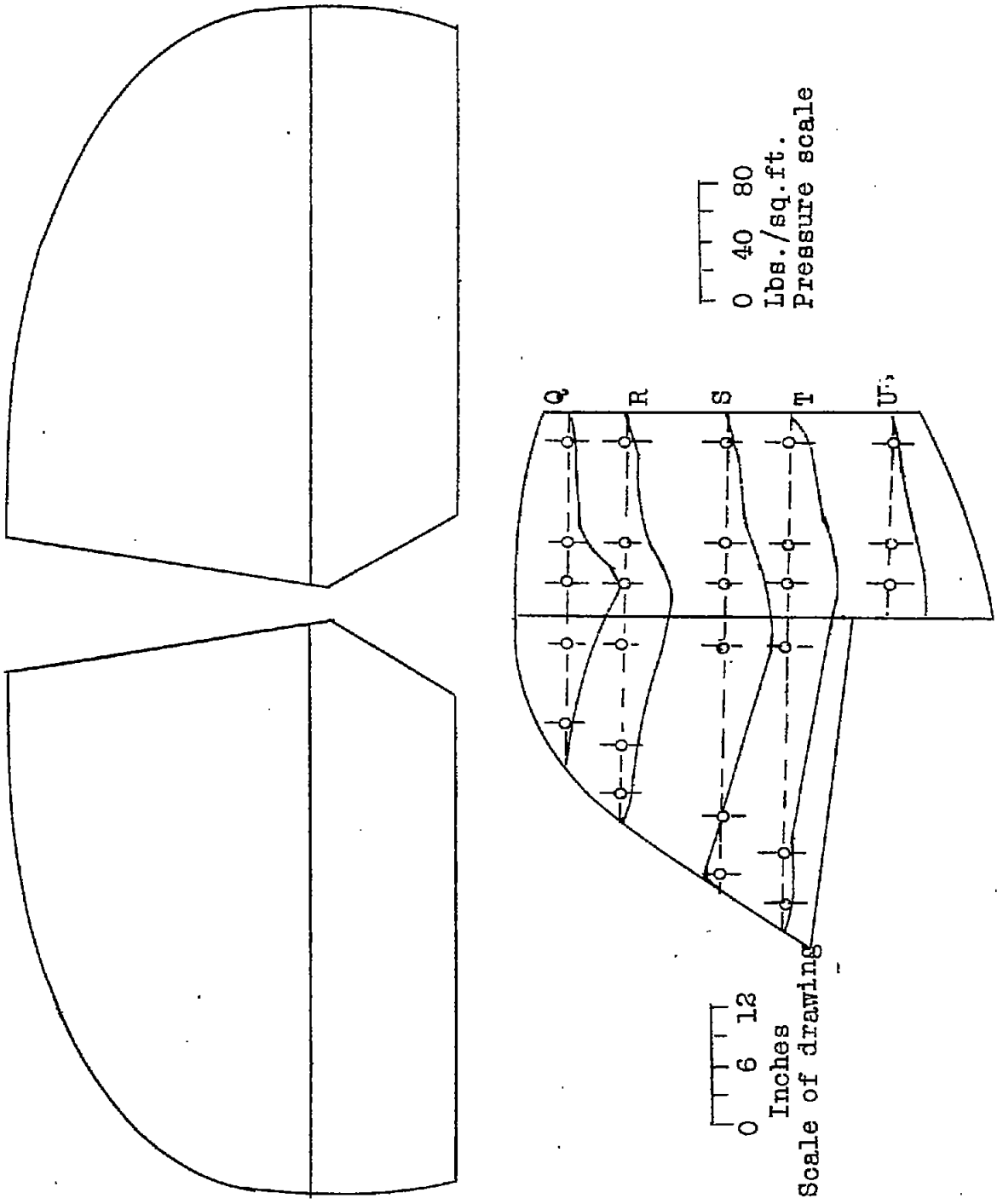

Fig. 20b Run No. 223; Left roll; Maximum load on vertical surfaces.

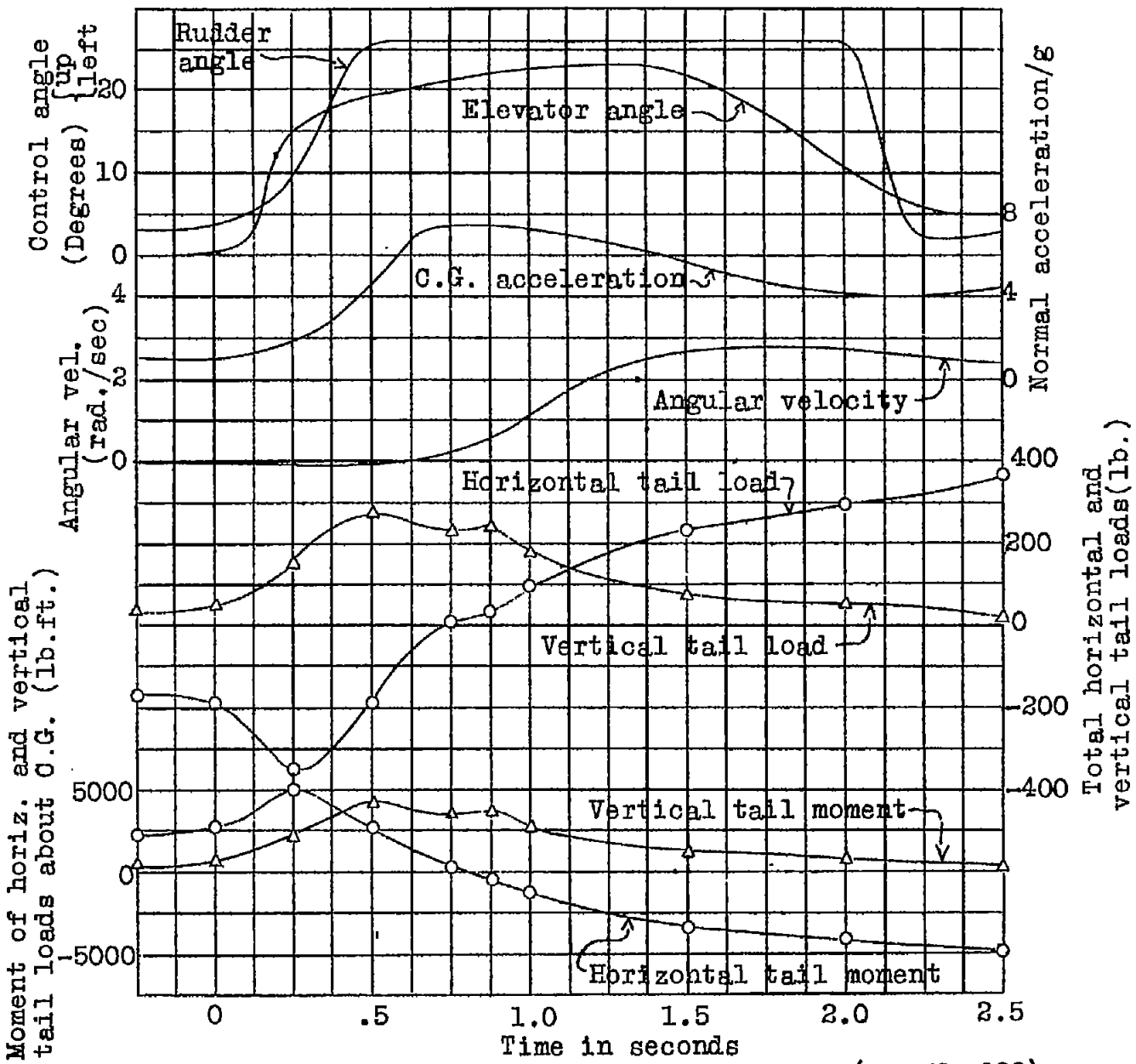

Fig.21 History of a right barrel roll at 167 m.p.h. (Run No.222)

Fig.21 (Continued on next page)

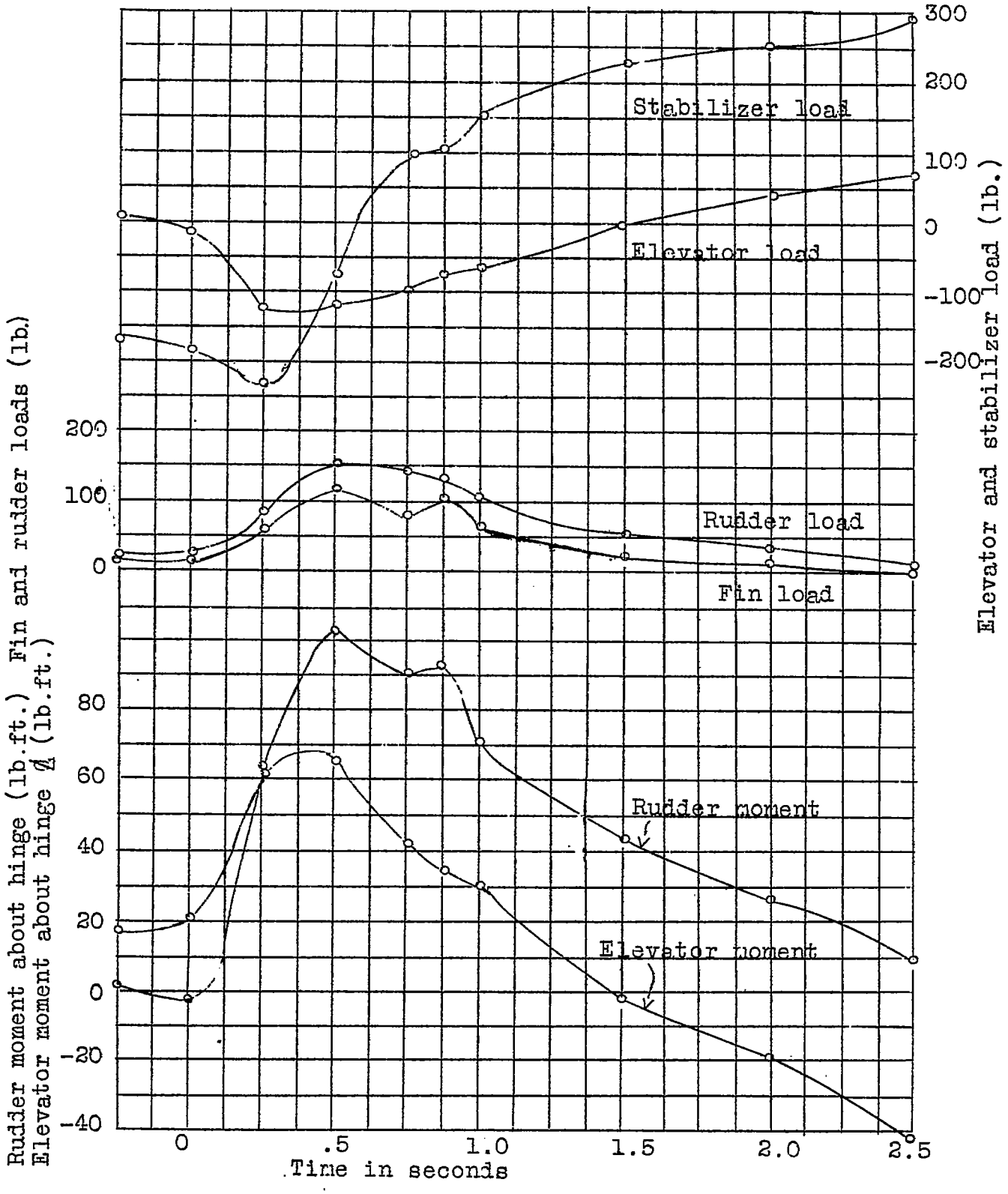
Stabilizer load
Elevator load
Rudder load
Fin load
Rudder moment
Elevator moment
Elevator and stabilizer load (lb.)
Fin and rudder loads (lb.)
Rudder moment about hinge (lb.ft.)
Elevator moment about hinge (lb.ft.)
Time in seconds
300
200
100
0
-100
-200
200
100
0
80
60
40
20
0
-20
-40
0
.5
1.0
1.5
2.0
2.5

(Continued on next page.)

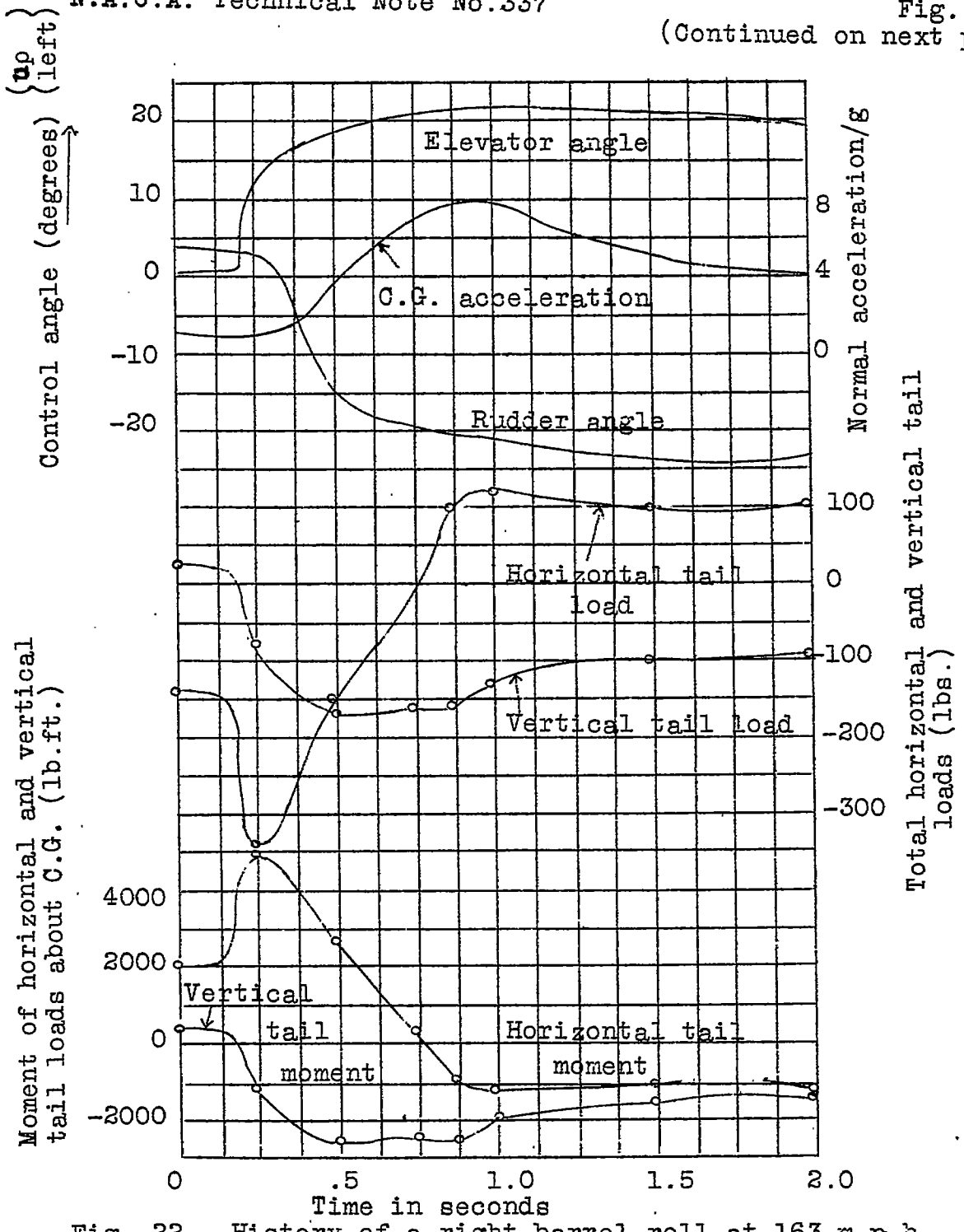

Fig. 22 History of a right barrel roll at 163 m.p.h. (Run No.225)

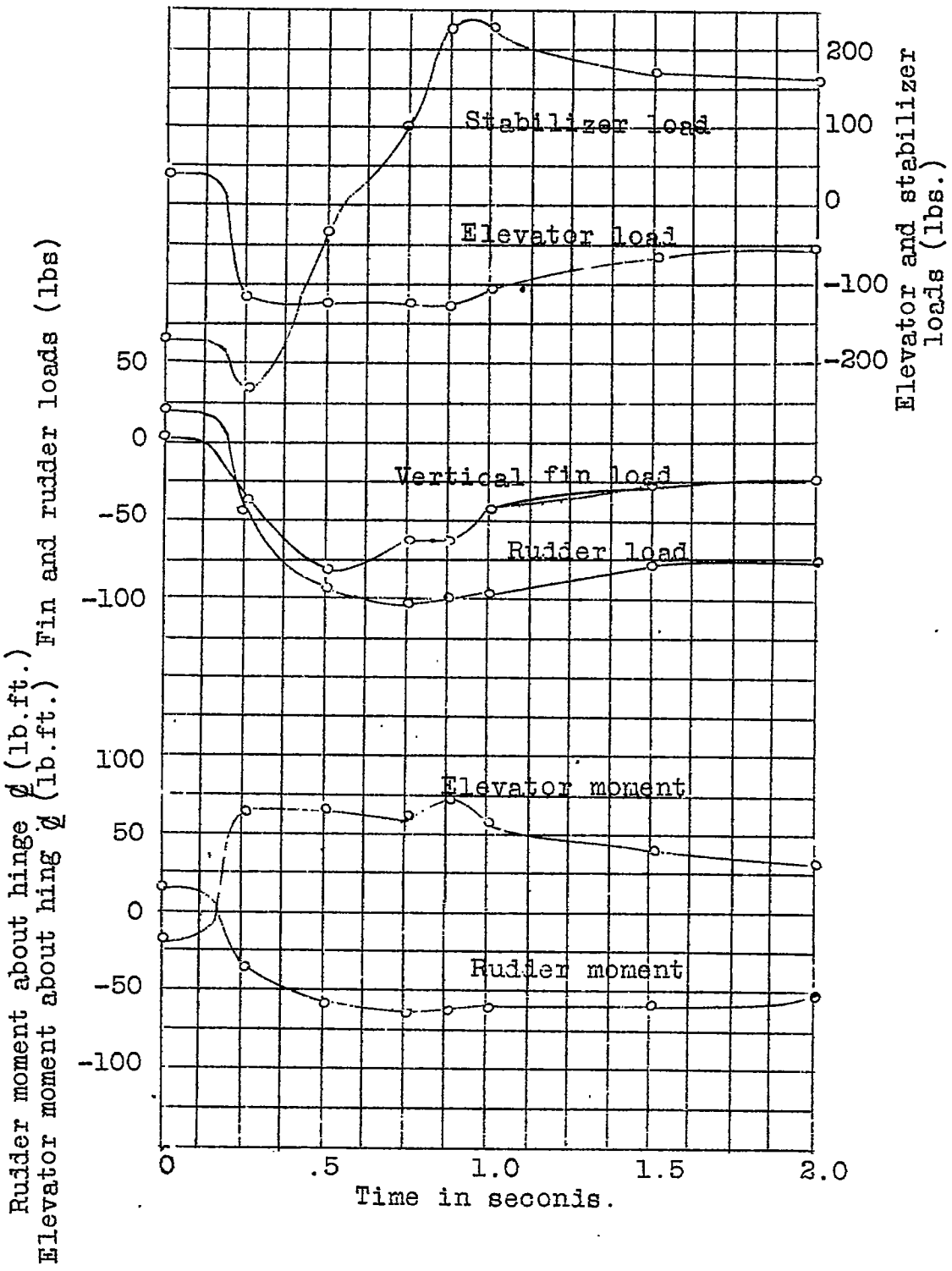
Stabilizer load
Elevator load
Vertical fin load
Rudder load
Elevator moment
Rudder moment
200
100
0
-100
-200
Elevator and stabilizer loads (lbs.)
50
0
-50
-100
Fin and rudder loads (lbs)
100
50
0
-50
-100
Rudder moment about hinge ℄ (lb.ft.)
Elevator moment about hing ℄ (lb.ft.)
0
.5
1.0
1.5
2.0
Time in seconds.

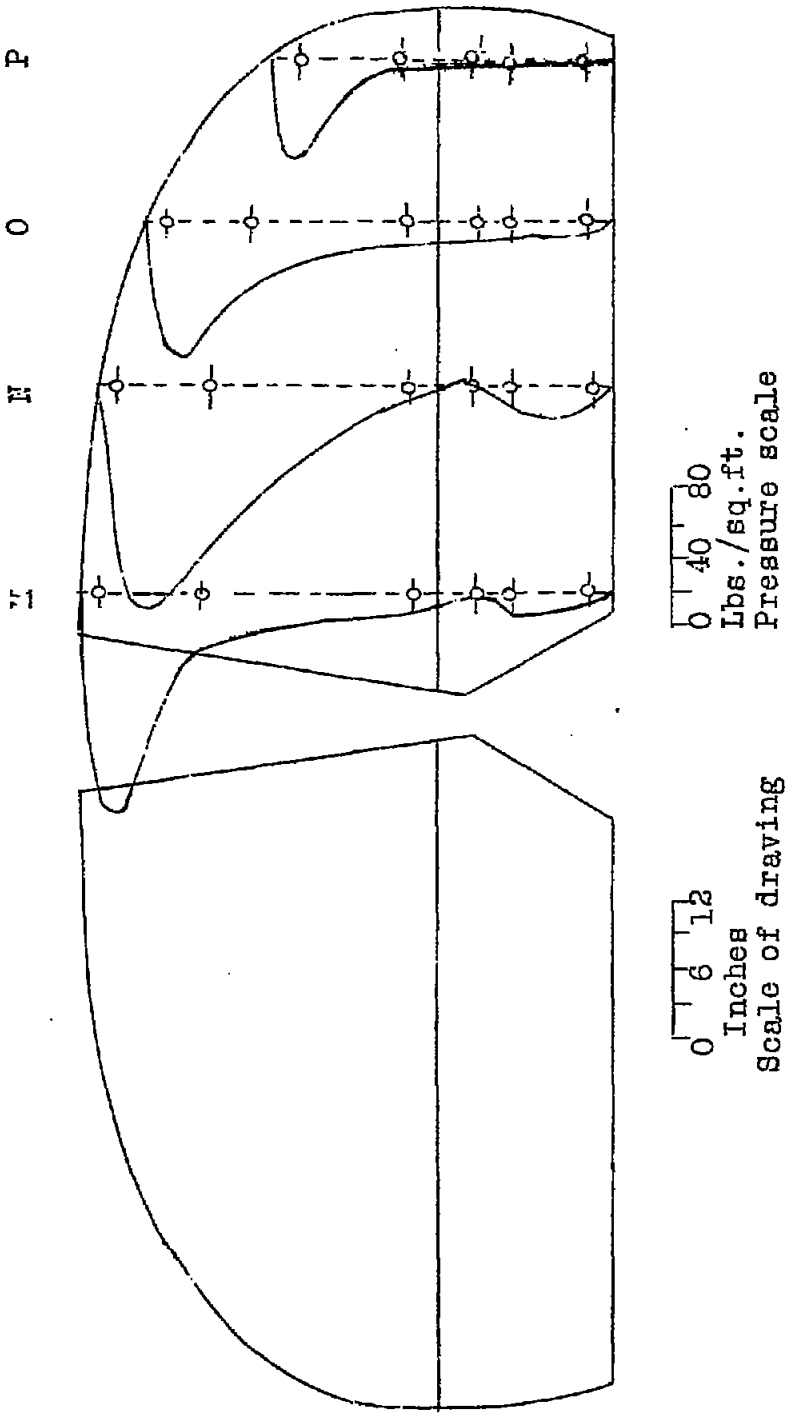

Fig. 23 Run No. 213; Dive;
Air speed unknown; over 250 m.p.h.

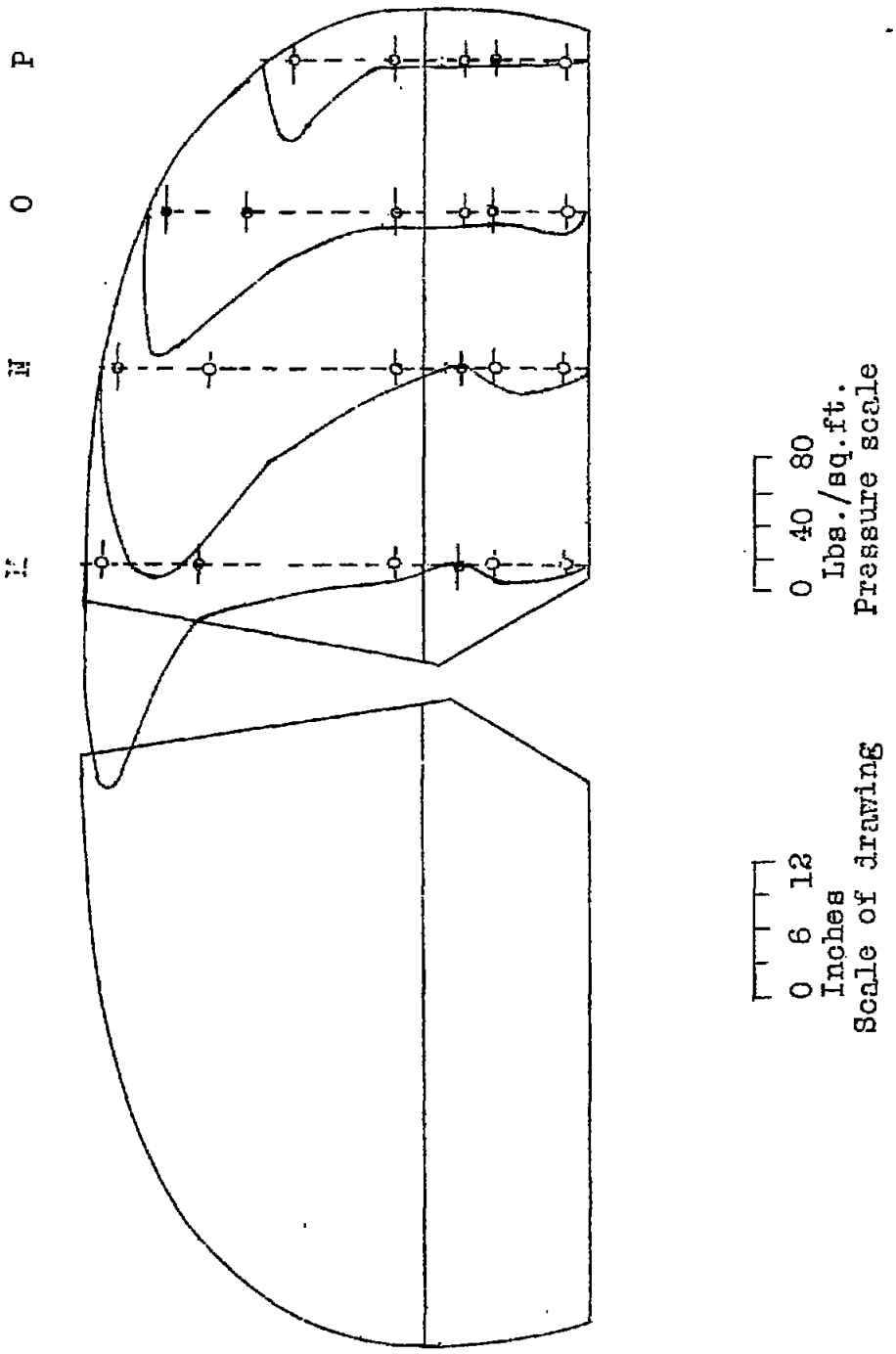

Fig. 24 Run No. 226; Dive at 260 m.p.h.

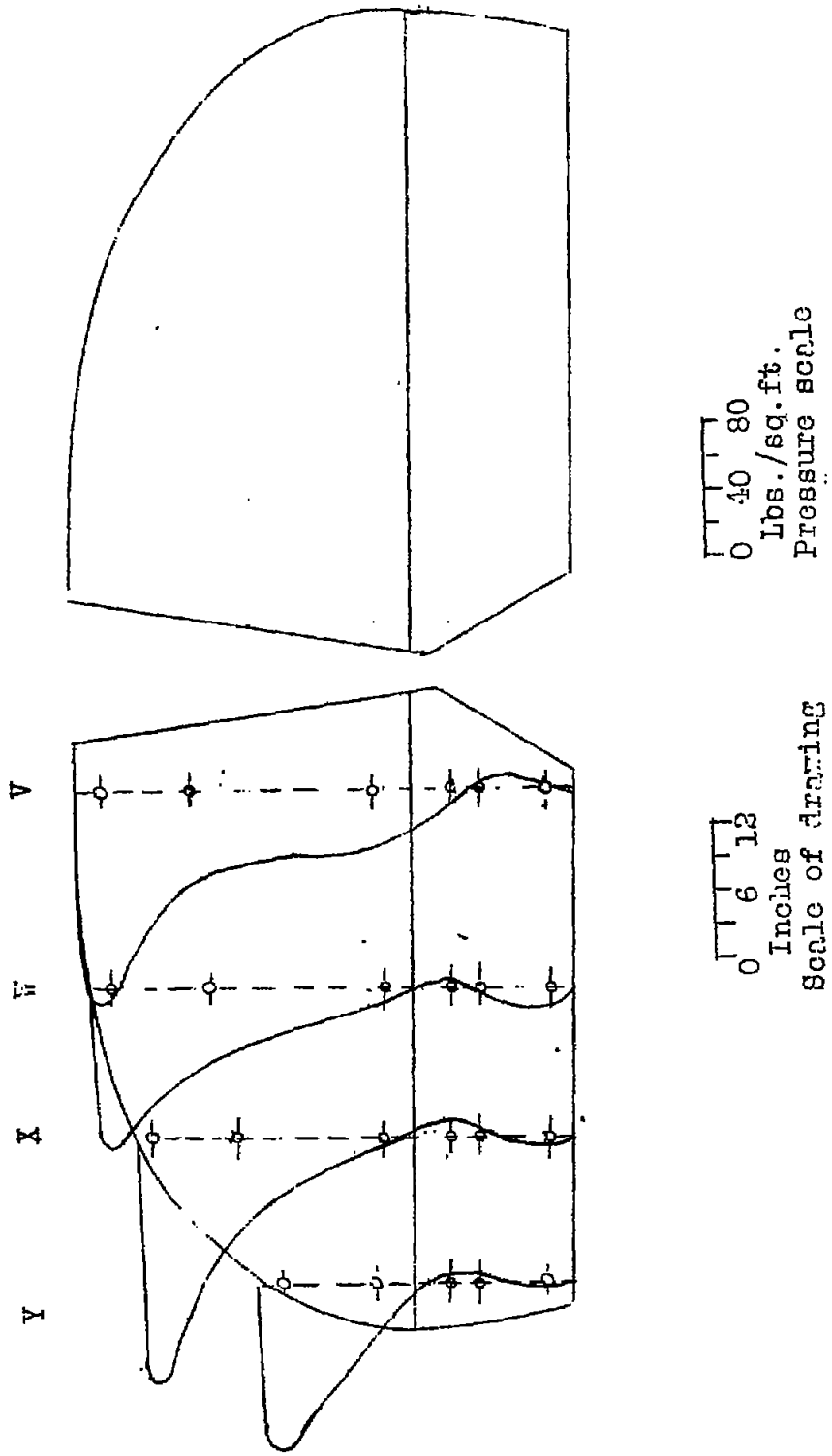

Fig. 25 Run No. 326; Dive.
Air speed unknown, over 250 m.p.h.

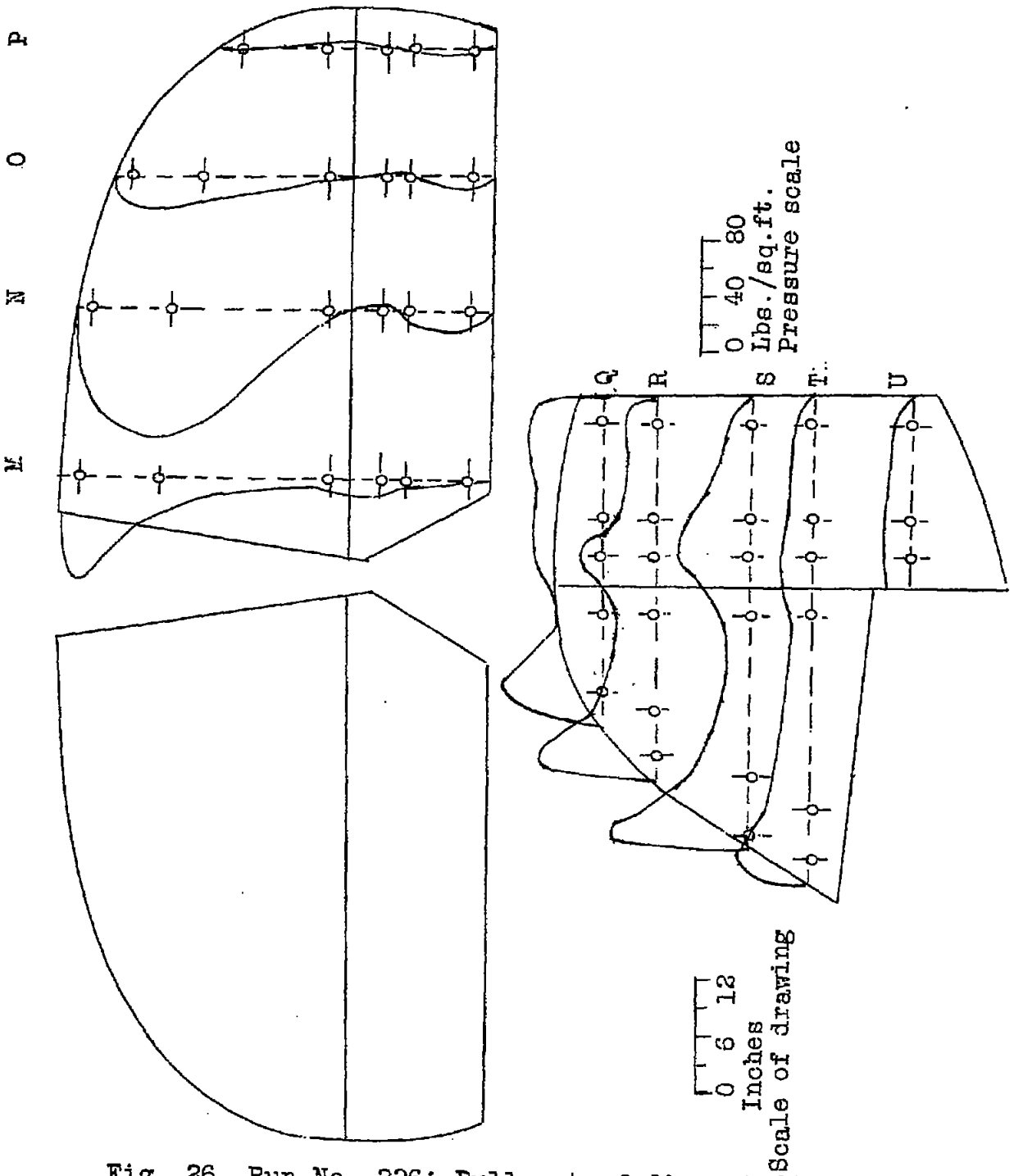

Fig. 26 Run No. 226; Pull-out of dive at 260 m.p.h.

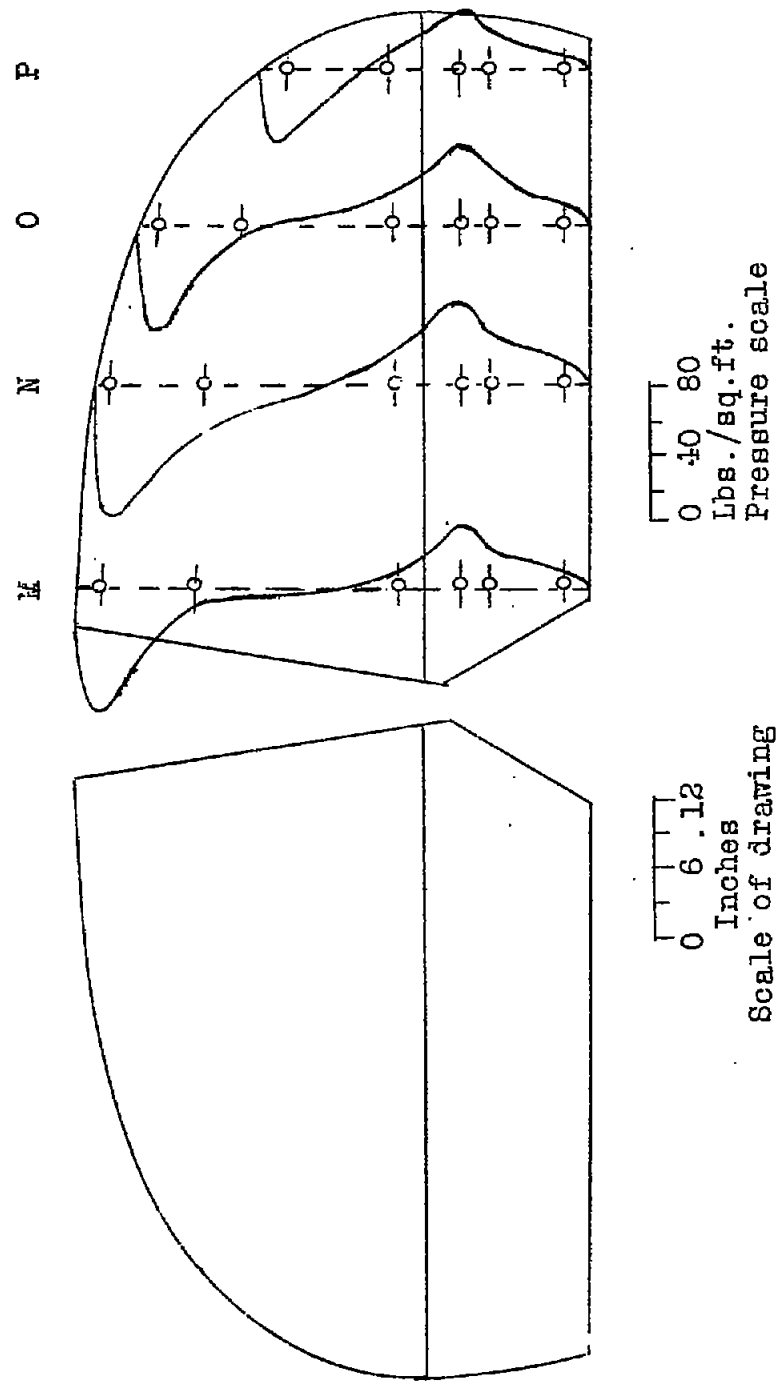

Fig. 27 Run No. 215; Push-down at 161 m.p.h.

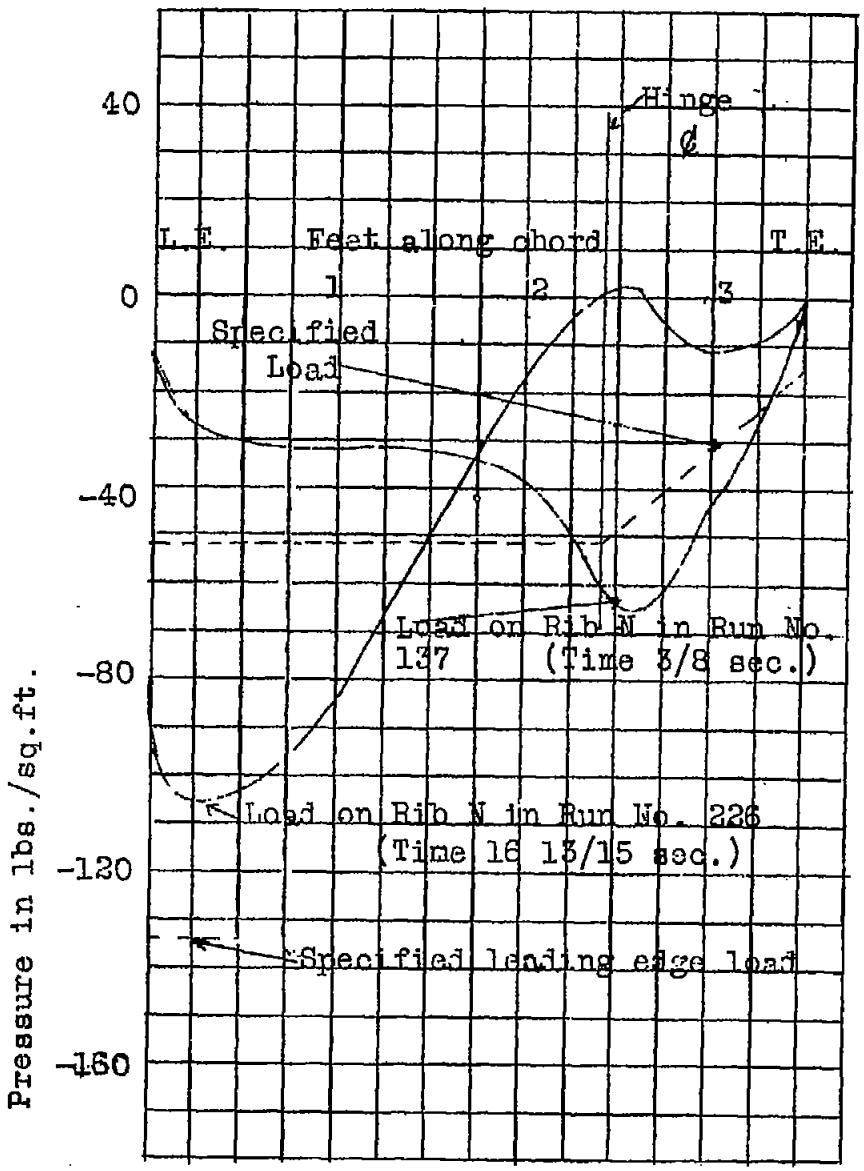

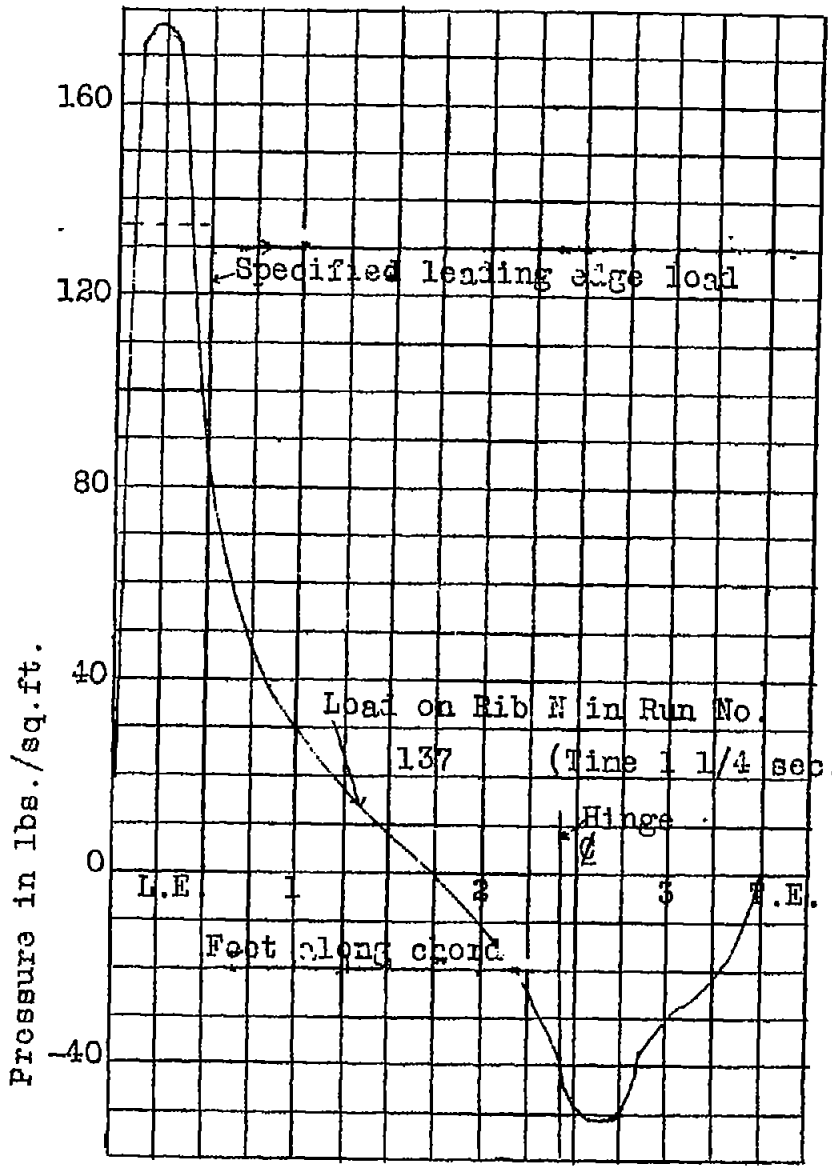

Fig. 28 Comparison of most severe horizontal surface Rib loads with specified loads.

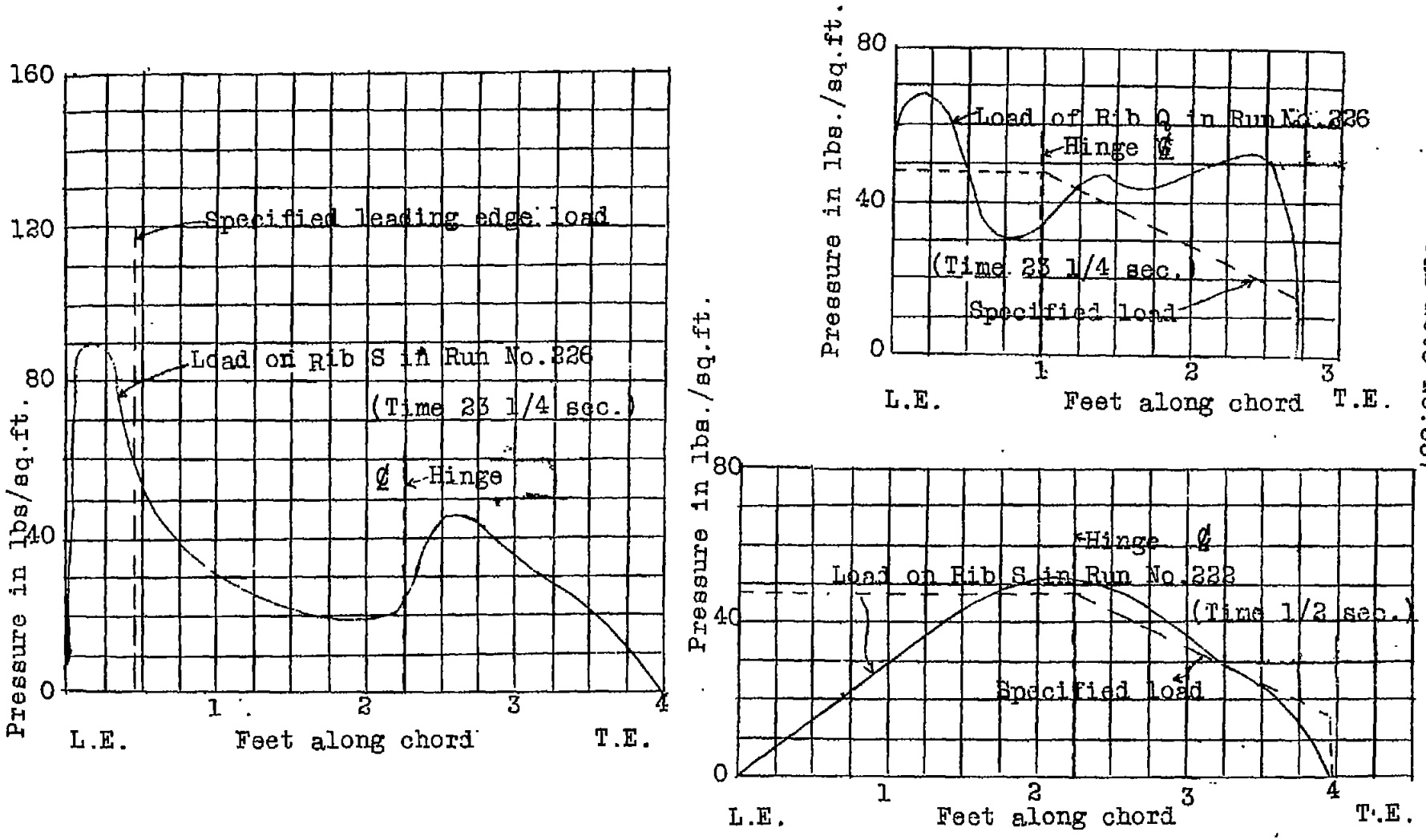

Fig.29 Comparison of most severe vertical surface Rib load with specified loads.