JUN 1 7 1930

NATIONAL ADVISORY COMMITTEE
FOR AERONAUTICS
MAILED
JUN 17 1930
TO: Library L.M.A.L.

~~5012.1~~
~~164~~

TECHNICAL NOTES

NATIONAL ADVISORY COMMITTEE FOR AERONAUTICS

No. 343

STRENGTH IN SHEAR OF THIN CURVED SHEETS OF ALCLAD

By George Michael Smith

FILE COPY
To be returned to
the files of the Langley
Memorial Aeronautical
Laboratory

Washington
June, 1930

NASA Technical Library
3 1176 01431 9397

NATIONAL ADVISORY COMMITTEE FOR AERONAUTICS.

TECHNICAL NOTE NO. 343.

STRENGTH IN SHEAR OF THIN CURVED SHEETS OF ALCLAD.*

By George Michael Smith.

Summary

This note is on an investigation made to obtain information on the strength of thin curved sheets of Alclad in shear. Designers may utilize this material as a strength member as well as for a covering for the wings and fuselages. A reduction may then be made in the size of the internal strength members. These experiments were undertaken with the object of securing the maximum value from the metal in this respect.

The point at which buckling occurs is of primary importance. The buckling shear of a curved thin plate was determined mathematically and also experimentally. The following formula was obtained mathematically:

$$s = K E \frac{t}{r}$$

in which s is the unit shear, K is a constant, E is the modulus of elasticity, t is the thickness of the material, and r is the radius of curvature. The value of K as determined by the experiments was found to be .075. This formula applies only when s is within the elastic limit of the material.

*Thesis submitted in partial satisfaction of the requirements for the degree of Master of Science in Mechanical Engineering in the Graduate Division of the University of California.

NATIONAL ADVISORY COMMITTEE FOR AERONAUTICS.

TECHNICAL NOTE NO. 343.

STRENGTH IN SHEAR OF THIN CURVED SHEETS OF ALCLAD.*

By George Michael Smith.

S u m m a r y

This note is on an investigation made to obtain information on the strength of thin curved sheets of Alclad in shear. Designers may utilize this material as a strength member as well as for a covering for the wings and fuselages. A reduction may then be made in the size of the internal strength members. These experiments were undertaken with the object of securing the maximum value from the metal in this respect.

The point at which buckling occurs is of primary importance. The buckling shear of a curved thin plate was determined mathematically and also experimentally. The following formula was obtained mathematically:

$$s = K E \frac{t}{r}$$

in which s is the unit shear, K is a constant, E is the modulus of elasticity, t is the thickness of the material, and r is the radius of curvature. The value of K as determined by the experiments was found to be .075. This formula applies only when s is within the elastic limit of the material.

*Thesis submitted in partial satisfaction of the requirements for the degree of Master of Science in Mechanical Engineering in the Graduate Division of the University of California.

The breaking point of the material was obtained in most of the tests as a matter of information and the results are included in this report. The effect of the supporting ribs was determined by varying the number used.

Introduction

In military aircraft the pay load that an airplane can carry is not always the primary consideration. However, in commercial aviation such is usually the case and every effort is directed toward securing the maximum pay load. By utilizing the maximum strength values of the wing and fuselage coverings it is possible to decrease the weight required for the internal strength members of the airplane. This saving in weight can then be devoted to carrying additional pay load.

The material used throughout in the experimental work was alclad. This is the regular 17ST duralumin with a coating of pure aluminum on each surface. This surface coating greatly increases the resistance of the material to corrosion. An account of this is given in the appendix.

The length of the test sheet in all of the experiments was twenty-four inches. The tests were made with the material curved to form the quadrant of a circle. The four values used for the radii in making the tests were: 4.312", 5.187", 6.187", and 6.937". Four gauges of the material were used with the following thicknesses in thousandths of an inch: .010,

.014, .020, and .032. A test was made using three ribs for each of the gauges with the different radii. In the set of tests using four ribs, every gauge was used with one of the radii. The 5.187" radius was the one used in making the tests with four ribs. Duplicate tests were made to check the results of tests which seemed questionable. A detailed log of the tests with the tabulation of the data obtained is given in the appendix. The mathematical development of the formula for the buckling shear of a curved thin plate is also included in the appendix.

Construction and Operation of the Test Machine

A photograph of the machine used in conducting the tests is shown in Figure 1. The plan view of the machine is given in Figure 2, the front elevation in Figure 3, and the side section view is given in Figure 4. Pictures of the first twelve test specimens after being tested are shown in Figures 5, 6, and 7. These pictures show the manner in which the buckling and breaking occurred.

The machine is supported above the floor with a wooden base. This is necessary to make possible the operation of the jackscrew which applies the upward force to the movable edge of the test specimen. The jackscre transmits the force to the lever arm through a small metal block which is shown in the side section view. The block has a knife-edge at the top to carry the beam in order to reduce the effect of friction to a minimum.

The short arm of the beam transmits the force to the slide through another knife-edge arrangement as shown in the side-section view. The movable edge of the test specimen is secured to the slide. The longer arm of the beam is connected to a scale which registers the force at that end of the beam. The length of each arm was carefully measured and it was then possible to obtain the actual force that was applied to the moving edge of the test specimen. It was not necessary to take into account the weight of the lever arm and the scale as these weights were counterbalanced.

The lever arm retaining strap was used to protect the scale from damage when the test specimens reached the breaking point. Without this protection the scale would have had the lever arm fall upon it every time that a test specimen was broken. However, difficulty was experienced with the scale at the breaking point of the material but from another source. The material usually broke quite suddenly and the sudden release of the tension on the scale often caused the internal mechanism of the scale to jump a tooth. The scale was therefore carefully checked before each test and when necessary it was adjusted and recalibrated.

The largest scale available was a 600-pound scale. By means of a lever-arm arrangement it was possible to use it for taking readings up to almost 6000 pounds for the force applied to the test specimen. However, some of the tests required readings to

be taken above this value. The range of the machine was increased by adding known weights by means of a bar on the lever arm just above the scale. By this means it was possible to determine the amount of the force that was applied up to the limit of the machine. The limit of the machine was then determined only by the limit of the jackscrew. In one of the tests a force of over 12,000 pounds was determined but the jackscrew failed at this point as it was only a 5-ton jackscrew. It was replaced with a similar jackscrew and in the remainder of the tests no force greater than 10,000 pounds was applied. All of the buckling values were obtained in the lower range of the machine. The breaking points of all except the one gauge with a thickness .032 inch were within the 10,000-pound limit.

The slide receives the force from the lever arm through a small flat plate welded to it at the bottom. This plate rests on the knife edge on the lever arm which was previously mentioned. The slide is kept between the two large vertical guides by the two small guard straps shown in the front elevation in Figure 3. These guard straps are made of one-inch angle iron but it was found necessary to reinforce them by bolting a half-inch plate over them. Each of these plates was about four by five inches and they were bolted to the vertical guides. This was necessary in order to enable the guard straps to withstand the outward force of the slide as the upper limit of the machine was approached.

The slide was made of two four-inch C channels placed back-to-back. The open side of one of these channels was placed toward the front of the machine and it carries the angle irons with the moving edge of the test specimen. The clearance between the slide and the vertical guides was adjusted to the proper amount by means of an adjusting bolt above the slide. This adjusting bolt is shown in the front elevation. The sliding surfaces were kept well oiled to reduce the friction as much as possible.

A two-inch strip of heavy gauge sheet iron was bolted on each vertical side of the test sheet with quarter-inch bolts. These strips were in turn bolted between pairs of two-inch angle irons. The angle irons on the moving side of the test sheet were bolted to the open side of the slide with half-inch bolts. The angle irons on the fixed side of the test sheet were bolted to the web of adjustable fixed support as shown in Figures 3 and 4. This support was made from an I-beam by cutting off one of the flanges. It would have been better to have removed only half of the flange and left the other half there to stiffen the web. In some of the experiments it was necessary to use stiffeners for the web in the upper ranges of the machine. The web of the I-beam was slotted to permit varying the position of the angle irons which carried the fixed edge of the test sheet. The flange was also slotted as shown in Figure 3 to permit adjusting the machine to the different size radii.

The test sheets were secured to the supporting ribs at the top and bottom with quarter-inch bolts. These bolts as well as those on the vertical sides were spaced at one-inch intervals. Great care was exercised to get the material to fit snugly over the ribs. In the first experiment the material was also bolted to the center rib but the material broke there first. To bolt the material to any but the end ribs had the same effect as shortening the test sheet to the length between the nearest ribs. Therefore, in the remainder of the tests the material was bolted to none but the ribs at the top and bottom of the test sheet. In the first three tests the two-inch strips had been bolted on the outside of the curve of the test sheets. Better results were obtained by placing the strips inside the curve for it prevented the washers on the bolts from causing the material to fail at the edge of the washers. This can be observed by studying the breaks for tests three and four as shown in Figure 5. Test three was made with the strip on the outside of the curve and test four was made with it inside the curve. With the exception of these two alterations the original procedure in conducting the tests was found to be satisfactory.

In running off a test the scale and counterbalance were first checked. The test sheet was then fitted into the machine. It was found best to secure the moving edge to the slide before securing the fixed end. For the first test with each size radius

the adjustable fixed support was then brought into position and securely bolted in place. The angle irons on the fixed edge of the test sheet were then bolted to the web of the I-beam through the slots previously mentioned. The jackscrew was taken up and the reading of the scale recorded. The force applied to the test specimen was computed later.

Results

The value at which each of the test sheets first buckled was obtained for each of the experiments. The breaking point was also obtained for those tests in which the material was broken. The data for each succeeding wrinkle is also included in the appendix of this report.

The results obtained were plotted as curves. In Figure 8 the total force required to buckle the material is plotted as one ordinate and the thickness of the material in thousandths of an inch is plotted as the abscissa. Five curves are given here, one for each size radius in which the material was supported with three ribs, and one curve for the 5.187-inch radius where four ribs were used. The buckling values for all of the tests made using three ribs were plotted in Figure 9. A curve was also plotted here to represent the formula which was obtained mathematically for the buckling shear. The ordinate here is the shear in pounds per square inch and the abscissa is the ratio of radius over thickness. Figure 10 is similar to Figure

9, but it is for the breaking values instead of for the buckling values. Figure 10 is just included as a matter of information as the results obtained for the breaking values are not as satisfactory as those for the buckling values.

Discussion of Results

The results of these experiments as shown in Figure 9 have proven most satisfactory. Most of the experiments plotted very nicely along a smooth curve and they followed this curve remarkably well in the left half. None of the tests was wild. The curve which was plotted with the formula obtained mathematically agreed very closely with the experimental curve. These two curves represent the basis of this investigation. All of the data necessary for the interpretation of the curves are included on the sheets with the curves.

The curves in Figure 8 show that the resistance of the material to buckling increases with a reduction in the radius of curvature for the material being tested. For example, when using the material with a thickness of .032 inch with a radius of 6.937 inches it buckled at 3,125 pounds. The same material used with a radius of 4.312 inches did not buckle until the force had been increased to 4,375 pounds. The difference in using these two radii resulted in a difference of 1,250 pounds in the force required to buckle the material.

The effect of increasing the number of supporting ribs is

also shown very definitely in this set of curves. Here the 5.187-inch radius when supported with three ribs required less force to buckle it than was required to buckle the 4.312-inch radius sheet. However, when the 5.187-inch radius was used with four ribs the resistance to buckling was greater than that for the smaller radius. In obtaining the curves in Figure 8 a test was made for every gauge and using each radius. There were also some check tests made.

The curves in Figure 10 give a general idea of where to find the breaking point. Such great accuracy was not deemed necessary in obtaining the breaking point as was the case with the buckling values. This is the only information that is probably necessary in this respect for in actual practice the breaking point of the material should not even be approached. After the material has been buckled, its life in aircraft construction has ended and it must be immediately replaced.. The formula obtained for the buckling shear was limited to use within the elastic limit of the material but a constant was determined to fit it to the curve for the breaking value. In view of the fact that the breaking point is beyond the elastic limit of the material the curves followed each other as closely as could be expected. The best value of K to use in this case was found to be .200. With that value of K the curves crossed at their centers and diverged in approximately the same amount on both sides. The breaking curves also follow the general direction of the buckling curves but at a fairly constant larger value.

The difference here would serve somewhat as a factor of safety though it should be additional to it and not considered as part of it.

Conclusions

Reliable results were obtained in regard to the values of the buckling points for Alclad. These experiments show that this material can carry a considerable load in addition to just serving as a covering on the wings and fuselages. It was also shown that the resistance of the material to buckling was increased appreciably by the use of internal supports. It is evident therefore that this material can be successfully used also as a strength member but that to obtain its maximum value it should have some internal supports.

Appendix A

Detailed Description of the Tests

The first test was made with the size .032 material supported with three ribs. The material in this test was bolted to each of the three ribs. The scale was calibrated prior to beginning the test and it was found to read three pounds heavy. This was taken into account in the calculations later on. The scale was calibrated by means of the two 50-pound standard weights that were available. One weight alone registered 53 pounds and the two weights suspended together registered 103 pounds. The material buckled in this experiment when the scale

registered 375 pounds. It appeared quite likely that the limit of the scale would be reached before the test specimen would break and therefore the two 50-pound weights were placed on the bar just above the scale on the lever arm. As the scale only ran up to 600 pounds, this was necessary to increase the range of usefulness for the scale. The test was then continued and the material failed at 580 pounds scale reading. The test sheet broke at the holes where it was bolted to the center rib. As previously explained these holes had the same effect as would have been obtained by halving the test sheet. So in the remainder of the tests the material was only bolted to the end ribs. A photograph of this break as well as pictures for the following eleven experiments are shown in Figures 5, 6, and 7.

The second test was made with the .014 size material, and it was also supported with three ribs. An additional bolt was placed at each end of the supporting strips for the great force employed in these tests had caused one of the corners to slip a little in the first test. A small shear force was exerted on the test sheet while it was being clamped into the machine but it was registered on the scale and read in on the scale reading. A large wrinkle formed in each half of the test sheet at 48 pounds scale reading. Another wrinkle formed at 63½ pounds scale reading. At 175 pounds there were four wrinkles in the upper half and three in the lower half. At 318 pounds the bolt holes in the upper right-hand corner broke and the scale dropped to 307½ pounds. As the force was increased more holes tore out

without showing any increase in the scale reading. The failure in this test occurred at the outer edge of the washers placed under the nuts. This can be clearly seen in the picture of the number two specimen in plate two and more so for the number three specimen. In test number two the material broke first at the edge of the washer for the major break and then it broke next at the holes proper. In test three there were many more of the breaks at the edge of the washers.

The third test was made with the .020 size material supported with three ribs. A wrinkle formed in the lower half when the scale registered 165 pounds. At 215 pounds a wrinkle formed in the upper half. It appeared that it would be necessary to exceed the limit of the scale in order to break this specimen. Therefore, at 350 pounds scale reading the two 50-pound weights were added. The addition of these weights brought the scale back to the 287-pound mark. The test was then continued and at 574 pounds scale reading the material broke at the lower left-hand corner of the test sheet. The force was increased with the jackscrew but at 527 pounds the material separated at the bolt holes on the left side of the sheet and the scale reading dropped to 230 pounds. In this test it was clearly shown that the washers under the nuts holding the material in place were weakening the material there. It was decided to determine whether this could be overcome by placing the strip of supporting galvanized iron inside the curve of the test sheet. This proved to be the better method and it was used for the remainder of the tests.

The fourth test was made with the .010 size material. In this test the material did not fit so snugly as in the preceding tests but it did not appear to be sufficiently loose to cause any appreciable error in the result of the test. The value of the readings obtained in this test did compare favorably with other similar tests. A wrinkle formed in the upper half at 57 pounds, and at 100 pounds one formed in the lower half. The two 50-pound weights with their supporting bar were now added. The test was continued and at 475 pounds scale reading the upper right-hand and the lower left-hand corner holes cracked. At 478 pounds the holes in the upper right-hand corner gave way and the scale dropped to 290 pounds. The test sheet in this case was also supported with three ribs as for the preceding experiments.

The fifth test was made with the .032 size material and it was supported with four ribs. Two wrinkles formed in the middle section at 520 pounds scale reading. Then the two 50-pound weights and also two T sections of a large pipe and a number of other weights of known weight were added. The values of these weights are given in this appendix with the tabulation of the data from these experiments. Before the breaking point of the material was reached and before the limit of the machine was reached the test was held up. This was due to the failure of the bolts holding the slide guard straps in place. At this time the tension appeared to be greatest along a ridge in the

center of the test sheet. The edges of the material all looked very strong yet at that time. After repairing the slide guard straps the test was continued. All of the weights were added and the total force exerted on the test specimen was later calculated to be 12,300 pounds. The material did not break, however. The jackscrew used in this machine was only a 5-ton jackscrew and it failed in this experiment. It was replaced by a similar jackscrew and for the remaining experiments it was deemed advisable to limit the use of the machine to 10,000 pounds. This could be done very well and still carry out all of the tests with the exception of securing the breaking point for the .032 size material. This information was not considered to be of such great importance as compared to the other information obtained in these experiments. Ample data were secured in this respect from the three smaller thicknesses of the material that were used in this work.

The sixth test was a duplication of the first test in order to check it. However, in this case the test sheet was not bolted to the center rib. The buckling value was somewhat greater and the breaking value was considerably greater. At 458 pounds scale reading a wrinkle formed in the lower half and the scale dropped to 445 pounds. Weights were then added consisting of the two 50-pound weights, the two T-sections, and two of the similar solid steel cylinders. The addition of these weights brought the scale reading down to 192 pounds. The test was

continued until the slide slipped out of place due to a springing of the slide guard straps. The value of the force applied to the test sheet when the slide slipped out of place was calculated to be 10,804 pounds and as this was beyond the limit of the jackscrew it was deemed advisable to discontinue this test. The assistant whose weight was 183½ pounds, added his weight to that on the end of the lever arm to obtain the maximum forces in these tests. After this test the slide guards were reinforced with a plate covering which was bolted to the guides. A separate plate was placed over each of the slide guards. After this there was no further difficulty experienced with the slide slipping out of place.

In the seventh test four ribs were used to support the .014 size material. At 78 pounds a wrinkle formed in the middle section and at 115 pounds another wrinkle formed in it. One also formed in the top section at the same time. At this point, put on the two T-sections and continued. At 300 pounds the material appeared to have reached its elastic limit for the needle would ease back from the maximum readings as the force was increased. However, this may have been due to a tension or spring effect. At 380 pounds the first and third rivet holes in the upper right-hand corner gave way and the scale dropped to 368 pounds. With just a little more force the specimen failed completely in the upper right-hand corner.

The eighth test was a very good test throughout. The test

specimen was fitted very snugly to the ribs in the set-up. It was the size .020 material and it was supported with four ribs. At 145 pounds a wrinkle formed in the lower section and at 255 pounds the middle and upper sections wrinkled. The wrinkling continued up to the limit of the scale at which time more weights were added. The two T-sections, the two similar cylinders, and the two 50-pound weights were added, and this brought the scale reading back to 290 pounds; continued the test up to the limit of the scale and then added more weights. The flange and the large solid steel cylinder were added at this time. The test was then continued and at 585 pounds the material broke. In this test the material broke out in the crease first, away from the bolt holes. This break was followed by the holes tearing out at the right edge as shown in Figure 6. The material also cracked at the bottom edge in the left-hand corner. This was a very good test.

Test number nine was also made with four ribs. The size .010 material was used. Prior to beginning this test the slide guides were carefully readjusted with the slide adjusting bolt to give the slide the best clearance. At 71 pounds a wrinkle formed in the middle section. The two 50-pound weights were added at the time when the scale read 170 pounds, and this brought the scale reading back to 94 pounds; continued the test up to the breaking point which was at 460 pounds scale reading. The material broke then and the scale dropped to 421 pounds.

Test number ten was made with the size .014 material supported with three ribs. This test was a repetition of test number two and was made as a check. The radius for this test and all of the preceding ones was 5.187 inches. At 52 pounds a wrinkle formed in the lower half of the test sheet. At 87 pounds there were two wrinkles in the lower half and one in the upper half. Another wrinkle formed in the upper half at 135 pounds. At 238 pounds scale reading the two 50- pound weights were added and the scale dropped to 170 pounds. At 440 pounds it failed at the top edge of the upper right-hand corner and also at the bottom edge of the lower left-hand corner. The force was continued up to 480 pounds scale reading at which point the specimen broke completely and the scale reading dropped to 380 pounds.

Tests had now been made with this radius for two sets of ribs and for four sizes of the material. Two check tests had been made and they agreed very well with the original tests. Therefore it was decided to use a different size radius in the next tests. The radius used in the next four tests was 6.937 inches. All of the remaining tests were made with three ribs.

Test number eleven was made with the size .020 material. At 118 pounds a wrinkle formed rather faintly in the upper left-hand corner. At 136 pounds a wrinkle formed in the lower left-hand corner. There was also a wrinkle formed in the upper right-hand corner at 126 pounds. The adjustable fixed support slipped

at 320 pounds and the scale dropped to 152 pounds. The reason for this was probably due to the use of the larger radius. The support was braced with a metal block at the upper left edge and the test was continued. Weights were added and the force was run up to the limit of the machine but the material did not break. This may have been due to the fact that it had previously slipped during the test. The values obtained for the buckling point were good, however, as they had been taken prior to the slipping of the support. The values for the buckling point of the material when used with the larger radii were satisfactory but the values for the breaking point were not as good as those for the smaller radii.

In test number twelve the size .010 material was used. It wrinkled at 50 pounds scale reading and at 360 pounds it broke in the upper right-hand corner. The holes in this test tore out under the washers. A picture of this test sheet and the one for test number eleven are included in Figure 7. This is the last test sheet that was photographed as the pictures of the first twelve specimens bring out the details of the breaks. In all of the tests the bolts used to secure the test sheet in place were all screwed up very tight in order to give as good results as could have been obtained by using rivets. The results appear to be just as accurate as if rivets had been used. The travel of the slide during this test was one inch and it was approximately the same in the other tests. This is just included as a matter of information.

Test number thirteen was made with the size .032 material. This specimen fit unusually well on the ribs and also in the machine. At 330 pounds two wrinkles appeared in the upper half and at 345 pounds a wrinkle formed in the lower half. At the limit of the scale all of the weights were added. These included the two T-sections, the three similar cylinders, the flange, the large cylindrical piece, and the two 50-pound weights. This brought the scale back to 310 pounds; continued the test up to 330 pounds and then deemed it advisable to discontinue due to the bending of the web of the I-beam at the outer lower edge. It was not likely that the breaking point of this material would have been within the range of the jackscrew and therefore no further thought was given toward obtaining the breaking point. However, the web of the I-beam was reinforced with a flat metal plate bolted on the web on the opposite side from the place where the angle irons carrying the test sheet were supported. These bolts for the reinforcing plate also were used to bolt the angle irons to the web of the adjustable fixed support. The difficulty here mentioned was spoken of in the description of the machine with a recommendation for alteration in a duplication of this machine. The reinforcing plate fitted to the machine at this time proved satisfactory in the remaining tests and no further difficulty was experienced from this source.

Test number fourteen was made with the size .014 material. At 50 pounds scale reading a wrinkle formed in the upper half

and also one in the lower half. At 95 pounds, another wrinkle formed in the lower half. At 555 pounds the material broke simultaneously in the upper right-hand and the lower left-hand corners. The scale dropped to 540 pounds; continued the test until the scale registered 550 pounds. The specimen then failed completely and the scale dropped to 218 pounds. This test completed the series of tests for the 6.937-inch radius using each gauge of the material. When compared with the results obtained in the preceding tests these appeared to be quite satisfactory. Therefore, we proceeded to use the next size radius in the next tests.

During the interval between running off tests, numbers fourteen and fifteen, the scale had been used in other work in the shop. Prior to being placed in the machine for test number fifteen it was recalibrated and it was now found to read five pounds light instead of three pounds heavy as in the preceding tests. This was taken into account in making the calculations for obtaining the value of the force applied to the test sheet.

Test number fifteen was made with the size .020 material. The size of the radius used in this test and the three succeeding ones was 6.187 inches. At 110 pounds, a wrinkle formed in the upper half, and at 115 pounds one formed in the lower half. At the limit of the scale, added the two T-sections, the two 50-pound weights, the two similar cylinders, the large cylinder, and the flange. The test specimen had not broken at the limit of the machine and the test was then discontinued.

Test number sixteen was made using the size .014 material. At 41 pounds a wrinkle formed in each half; continued the test up to the limit of the scale and then added the two 50-pound weights. This brought the scale back to 525 pounds; continued the test and at 550 pounds the material broke. In this test the material broke very suddenly and caused one of the difficulties which was mentioned in the description of the machine: This was the jumping of a tooth in the internal mechanism of the scale. This caused the scale to only back down to 55 pounds instead of to its zero reading. The scale was readjusted and recalibrated prior to beginning the next test. The scale was now found to read three pounds light and this was taken into account in the computations.

Test number seventeen was made with the size .032 material. At 370 pounds scale reading a wrinkle formed in the upper half and at 434 pounds one formed in the lower half. The test was discontinued at 560 pounds scale reading as from the previous experiments with this gauge material it was found that the breaking point was beyond the limit of the machine. Therefore, only the buckling point was obtained for this size material.

Test number eighteen was with the size .010 material. At 17 pounds two wrinkles formed in the upper half and also one in the lower half. At 410 pounds the top edge of the upper right-hand corner cracked. At 460 pounds scale reading the test specimen failed completely and the scale dropped to 330 pounds.

This test completed the series of each gauge for this radius and as the results appeared satisfactory it was decided to proceed to the next size radius.

Test number nineteen was made with the radius of 4.312 inches and this was the radius used in the remainder of the tests. The size .010 material was used in this test. At 54 pounds scale reading a wrinkle formed in the upper half and also in the lower half. At 430 pounds scale reading the bottom edge cracked at the left corner. At 448 pounds the top edge also cracked at the right-hand corner. At 530 pounds the material began failing but it held together until the scale registered 560 pounds and then it broke.

Test number twenty was made with the material size .020. The test specimen in this test began wrinkling in the upper half at 192 pounds. At 250 pounds a wrinkle formed in the lower half. At the limit of the scale, the two 50-pound weights, the two T-sections, and the two similar cylinders were added. This brought the scale back to 350 pounds. Ran the scale back up to its limit which was now also the limit of the machine. The test sheet showed no indications of failing and therefore the test was discontinued.

Test number twenty-one was made with the size .032 material. Prior to running off this test it was necessary to again adjust and recalibrate the scale. It then read four pounds light. At 430 pounds scale reading a wrinkle formed in the upper half.

A wrinkle formed in the lower half at 530 pounds. The breaking point of this material was known to be beyond the limit of the scale and therefore the test was now discontinued.

Test number twenty-two was made with the size .014 material. At 40 pounds a wrinkle began to form very slightly in the upper half, and at 57 pounds it was completely formed. At 90 pounds a wrinkle formed in the lower half; continued the test up to 540 pounds and then added the two 50-pound weights. This brought the scale back to 460 pounds; continued the test up to 560 pounds and then added one of the T-sections. This brought the scale back to 505 pounds; then resumed the test and at 595 pounds the material broke. This was the most complete break of all the tests run off. It broke everywhere at the same time, the lower left-hand corner, the upper right-hand corner, and also along the right edge.

This test completed the series for the fourth size radius. There had now been tests run off using four different gauges of the material and four radii in every possible combination. Some check tests had been made also. When the computations had been made and the results plotted the data obtained proved to be very good. The data obtained for tests in which the number of ribs had been varied had also proved to be satisfactory. It was therefore not deemed necessary to run off any more tests.

Tabulation of Data Obtained from the Tests

Test No.	Size	Radius	Ribs	Buckling load	Breaking load
1	.032	5.187	3	3610	6600
2	.014	5.187	3	437	3056
3	.020	5.187	3	1571	6539
4	.010	5.187	3	524	5628
5	.032	5.187	4	5015	Unbroken at 12,300
6	.032	5.187	3	4414	" " 10,804
7	.014	5.187	4	728	4951
8	.020	5.187	4	1377	9640
9	.010	5.187	4	666	5433
10	.014	5.187	3	475	5627
11	.020	6.937	3	1116	Unbroken at 7,956
12	.010	6.937	3	456	3463
13	.032	6.937	3	3172	Unbroken at limit of machine
14	.014	6.937	3	456	4354
15	.020	6.187	3	1115	Unbroken at limit of machine
16	.014	6.187	3	446	6383
17	.032	6.187	3	3618	Unbroken at limit of machine
18	.010	6.187	3	194	4006
19	.010	4.312	3	553	4200
20	.020	4.312	3	1892	Unbroken at limit of machine
21.	.032	4.312	3	4210	Unbroken at limit of machine
22	.014	4.312	3	427	7592

Appendix A

Tabulation of Data from Tests in Final Form

Test No.	Shear in lb./sq.in.	Radius/Thickness
1	4694	162
2	1299	371
3	3275	259
4	2179	518
5 (four ribs)	6523	162
6	5749	162
7 (four ribs)	2161	371
8 (four ribs)	2863	259
9 (four ribs)	2776	518
10	1414	371
11	2321	348
12	1901	695
13	4128	217
14	1358	495
15	2390	305
16	1328	443
17	4695	194
18	808	618
19	2305	431
20	3940	216
21	5483	135
22	1271	309

Values of the Weights Used on the Lever Arm

The two T-sections (each 63-1/4 lb.)	126½ lb.
The large cylindrical weight	62½ "
Flange	38½ "
The three similar cylindrical weights	103½ "
Weight of the assistant	183½ "

Weight of the Material Used in the Tests

Size	.010	24" x 120"	4 lb.	(in sheets)
"	.014	28" x 120"	5 "	" "
"	.020	36" x 120"	9 "	" "
"	.032	36" x 144"	17 "	" "

The ratio of the arm of the scale to the arm of the slide was calculated to be 9.7 and the same ratio for the cross-bar carrying the added weights was calculated to be 10.0.

Note.- Tests were made in the mechanical laboratory of the University of California. The material used was furnished by The Aluminum Company of America.

April, 1930.

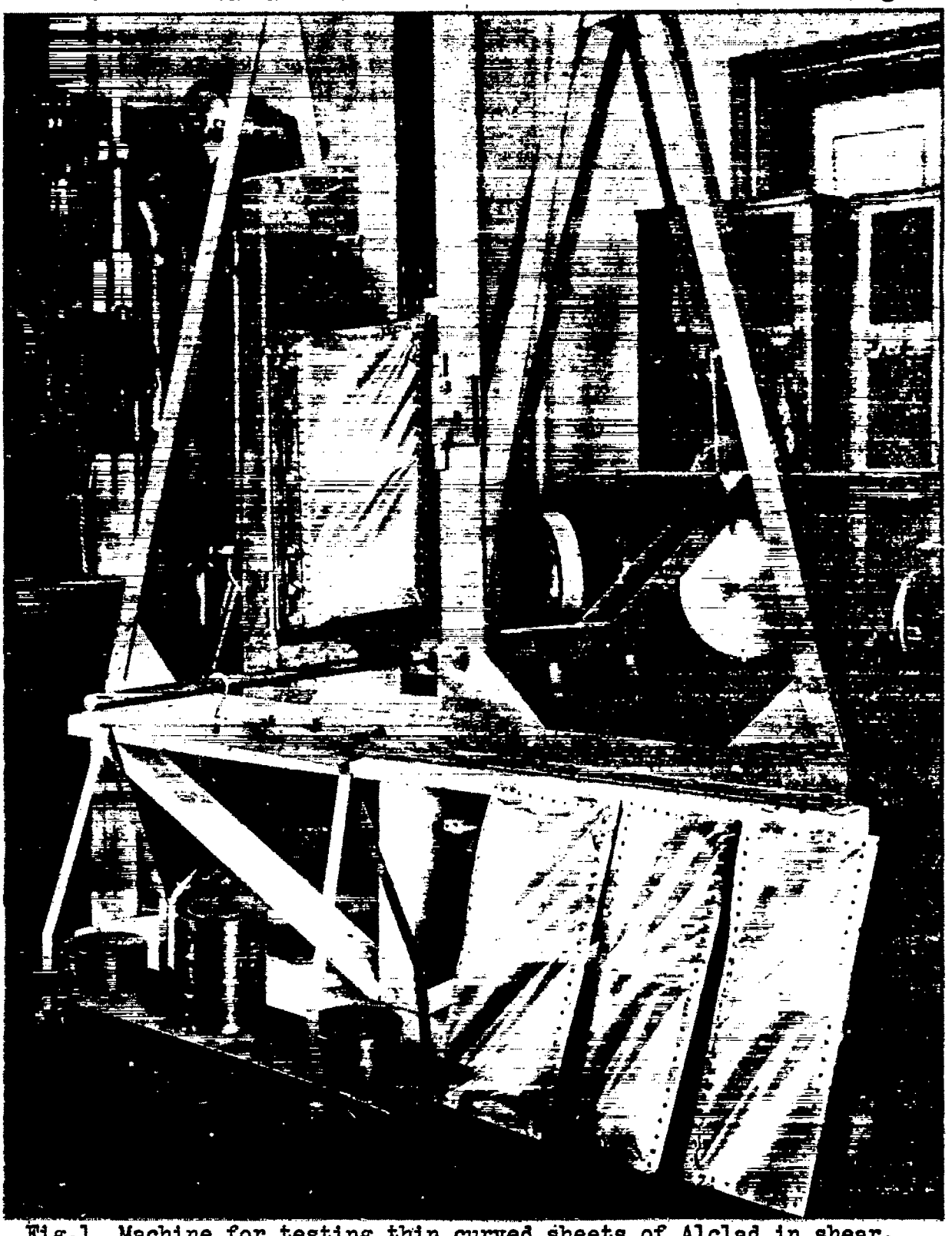

Fig.1 Machine for testing thin curved sheets of Alclad in shear. Tests made in the Mechanical Laboratory of the University of California, 1929 - 1930.

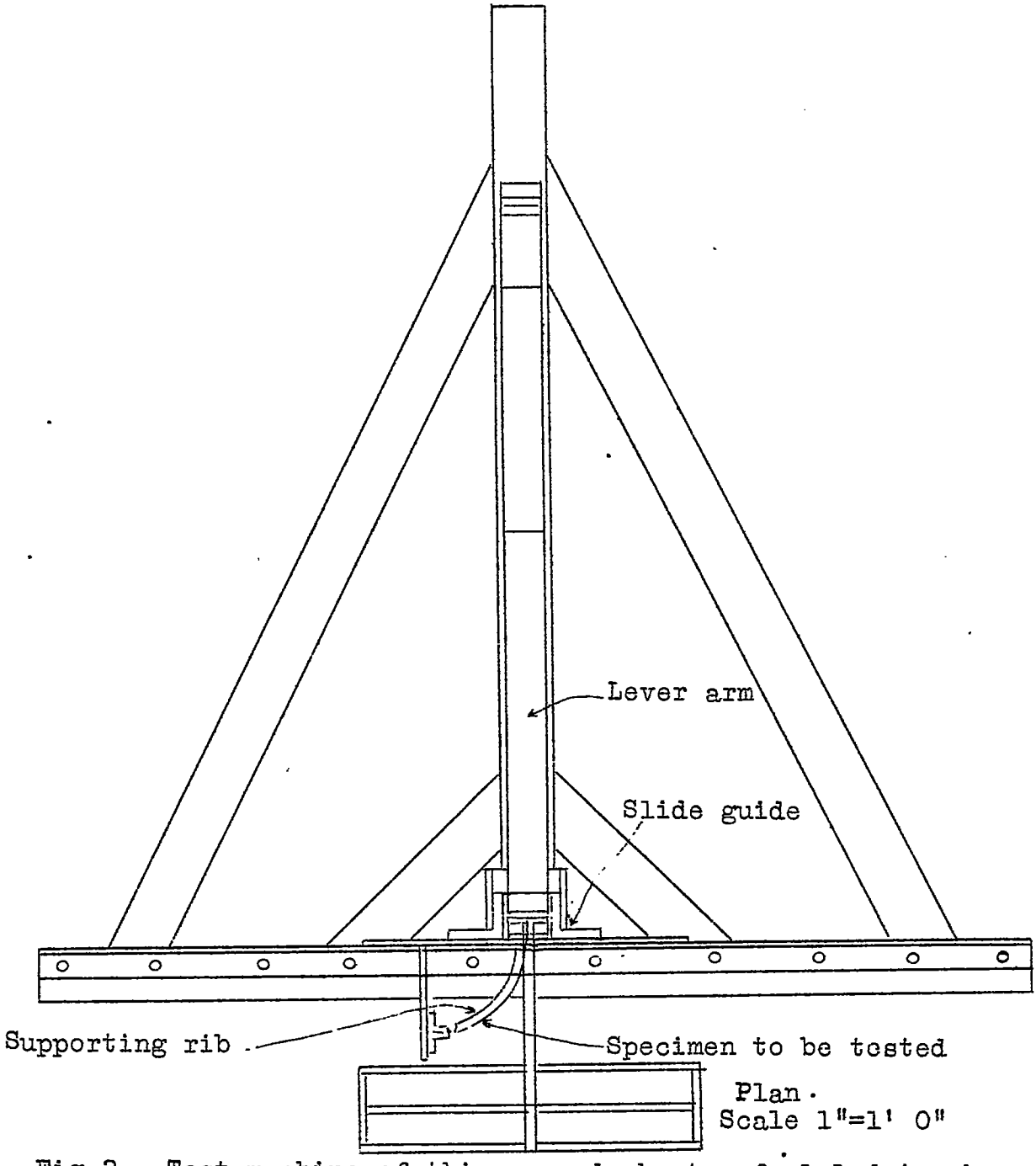

Fig.2 Test machine of thin curved sheets of alclad in shear.

Continued on the next two pages.

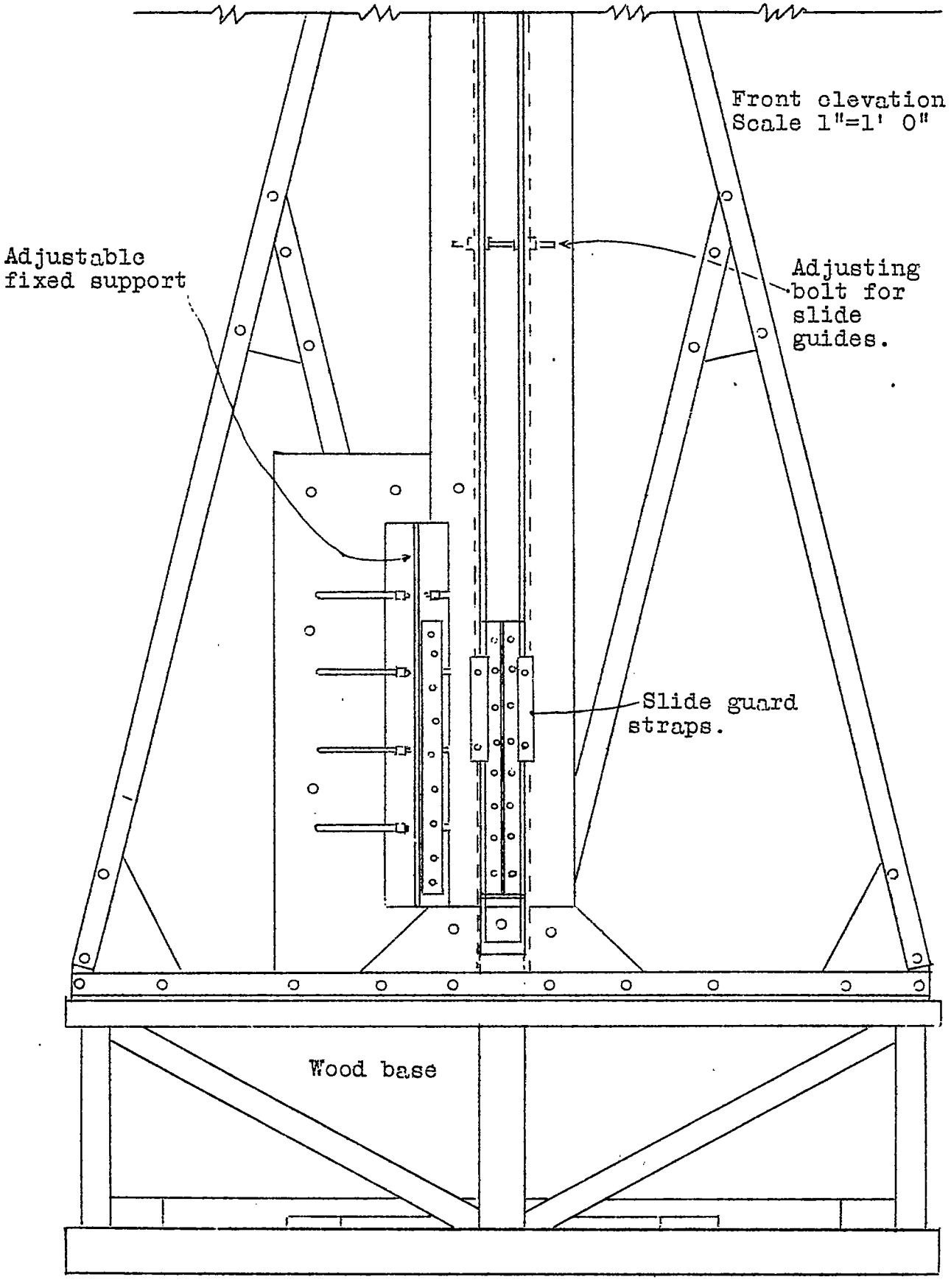
Front elevation
Scale 1"=1' 0"
Adjustable
fixed support
Adjusting
bolt for
slide
guides.
Slide guard
straps.
Wood base

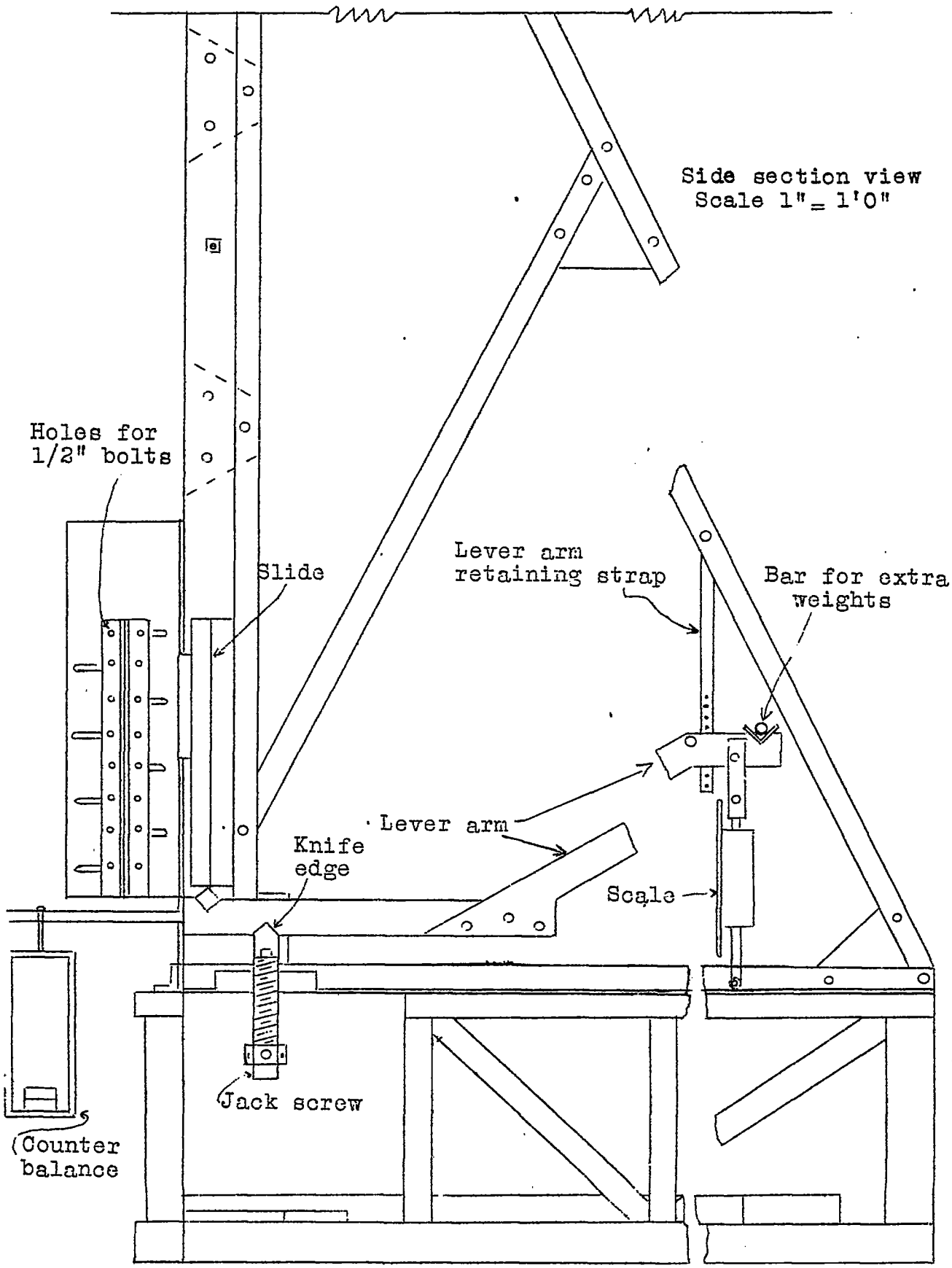
Side section view
Scale 1" = 1'0"
Holes for
1/2" bolts
Slide
Lever arm
retaining strap
Bar for extra
weights
Lever arm
Knife
edge
Scale
Jack screw
Counter
balance

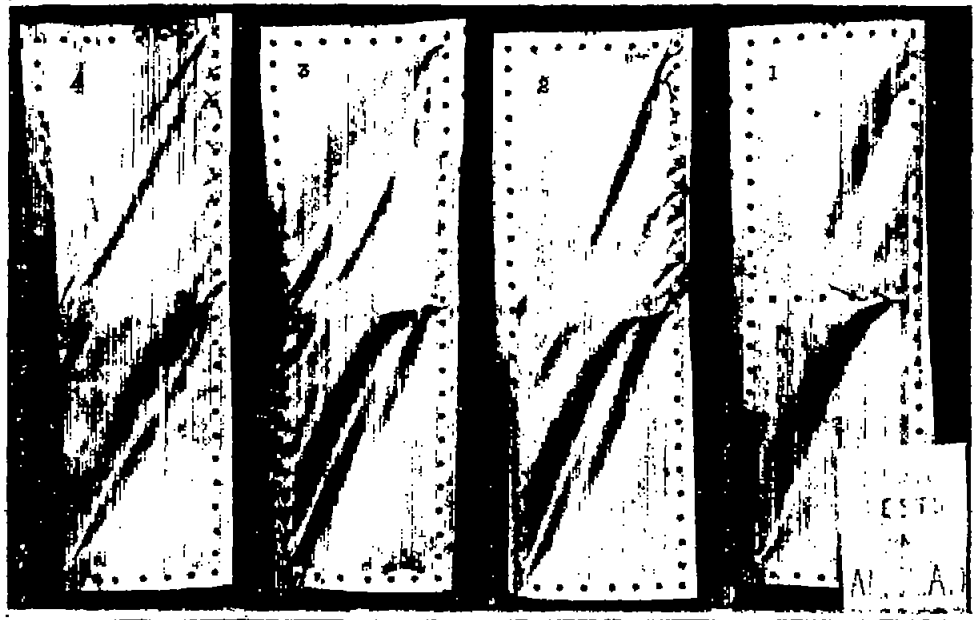

Fig.5

Experiments 1 to 4.

Fig.7

Experiments 9 to 13.

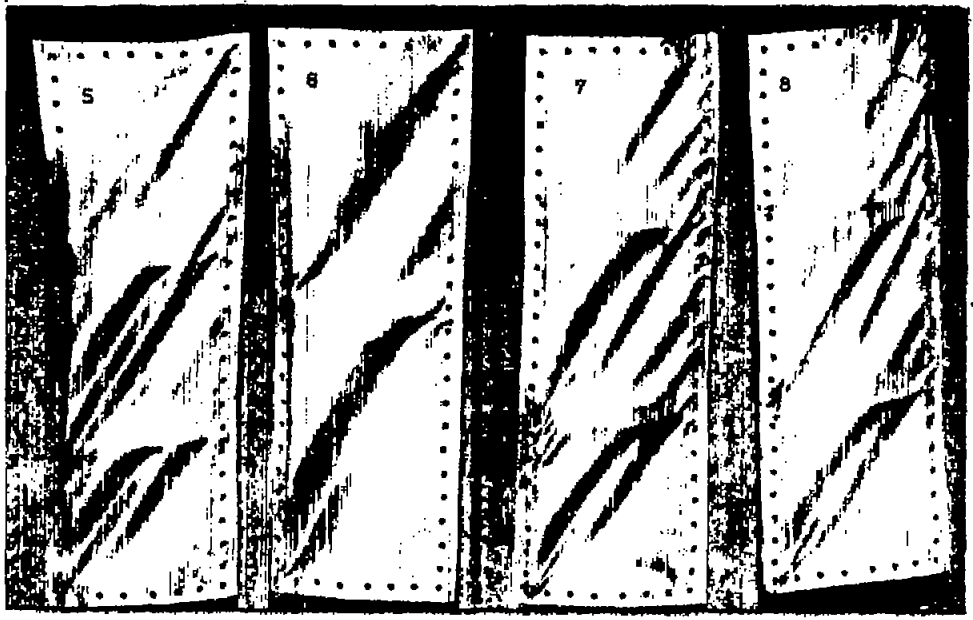

Fig.6

Experiments 5 to 8.

Test sheets of 13 experiments after being tested.

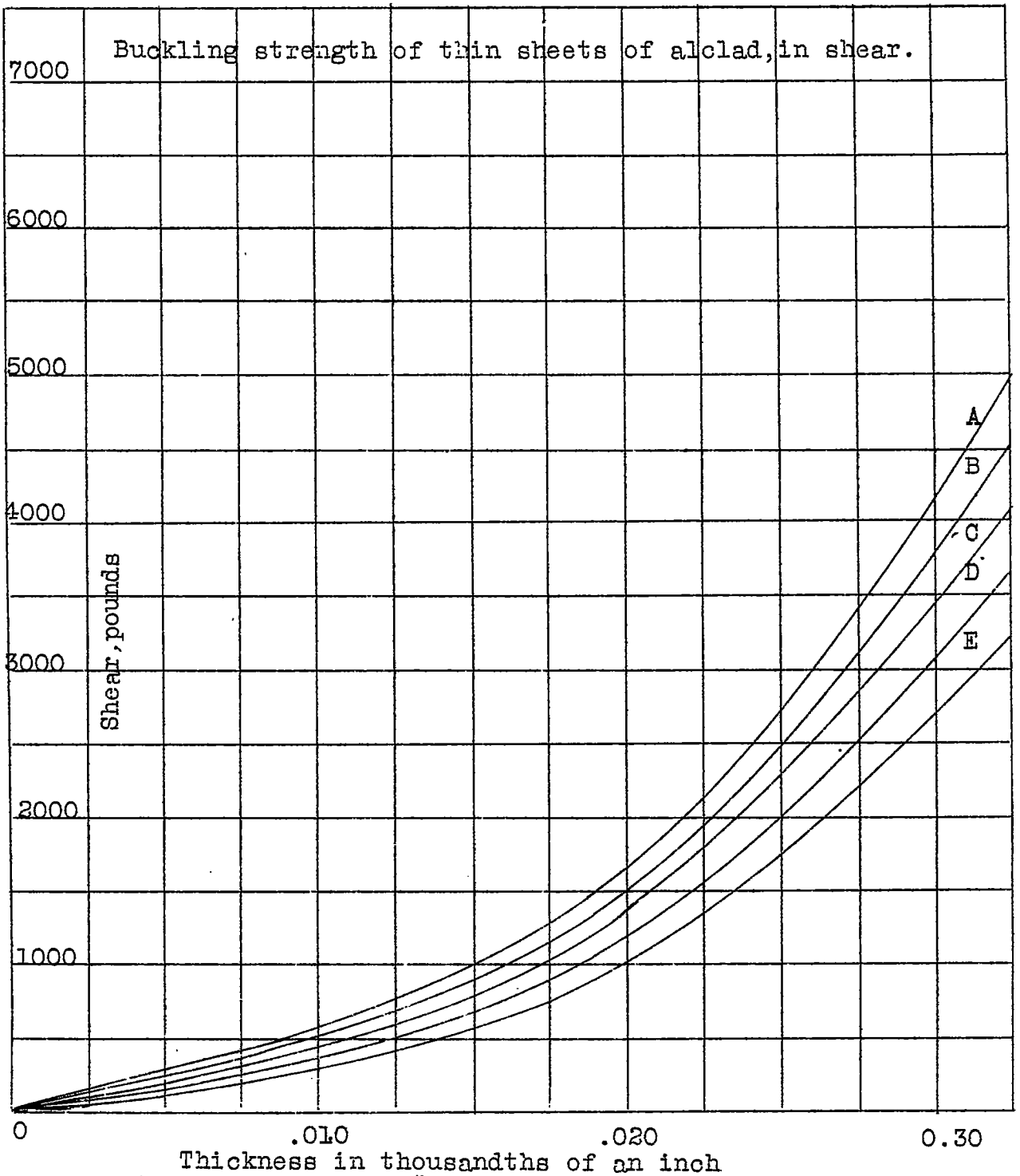

Fig.8 A, four ribs 5.187" radius.
B, three " 4.312" "
C, " " 5.187" "
D, " " 6.187" "
E, " " 6.937" "

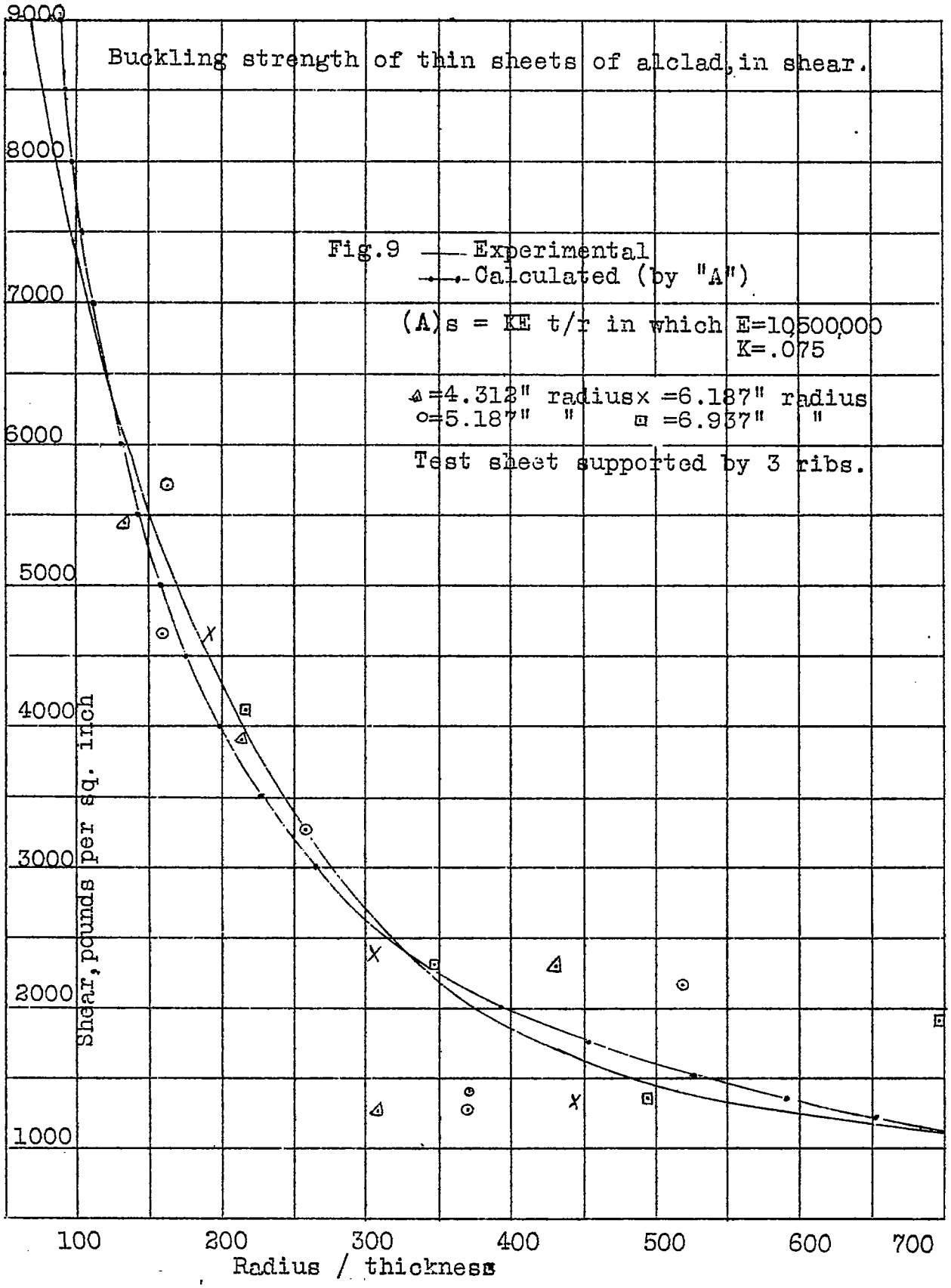
Buckling strength of thin sheets of alclad, in shear.
Fig.9 —— Experimental
-•-•- Calculated (by "A")
(A) s = KE t/r in which E=10,500,000
K=.075
△=4.312" radius × =6.187" radius
○=5.187" " ⊡ =6.937" "
Test sheet supported by 3 ribs.
9000
8000
7000
6000
5000
4000
3000
2000
1000
Shear, pounds per sq. inch
100
200
300
400
500
600
700
Radius / thickness

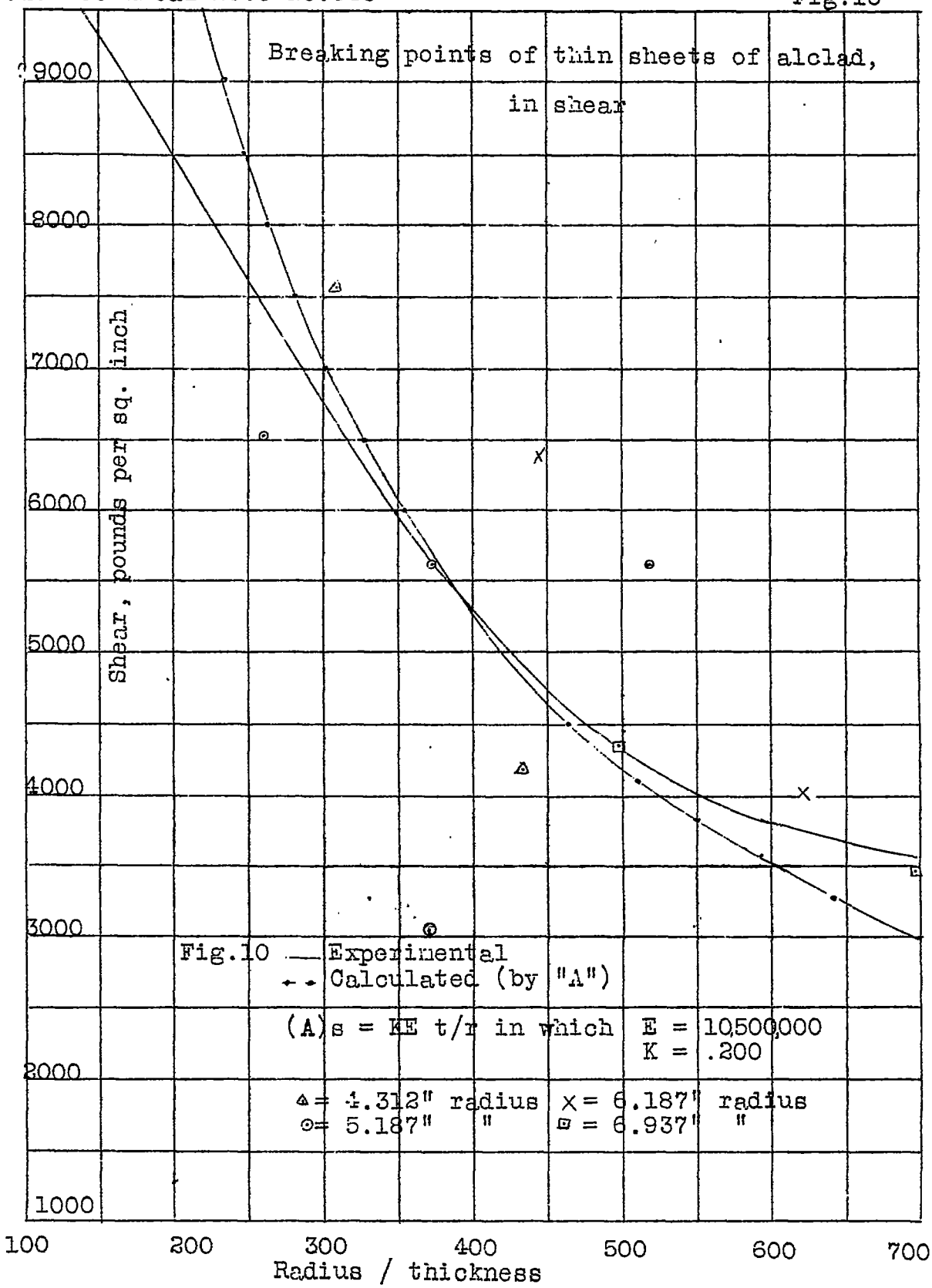
Breaking points of thin sheets of alclad, in shear
Shear, pounds per sq. inch
9000
8000
7000
6000
5000
4000
3000
2000
1000
100
200
300
400
500
600
700
Radius / thickness
Fig.10 —— Experimental
- - Calculated (by "A")
(A) s = KE t/r in which E = 10,500,000
K = .200
△ = 4.312" radius
⊙ = 5.187" "
× = 6.187" radius
⊡ = 6.937" "