REPORT No. 362

AN EXTENDED THEORY OF THIN AIRFOILS AND ITS APPLICATION TO THE BIPLANE PROBLEM

By CLARK B. MILLIKAN
California Institute of Technology

REPORT No. 362

AN EXTENDED THEORY OF THIN AIRFOILS AND ITS APPLICATION TO THE BIPLANE PROBLEM

By Clark B. Millikan

SUMMARY

The present paper gives a new treatment, due essentially to von Karman, of the problem of the thin airfoil. The standard formulæ for the angle of zero lift and zero moment are first developed and the analysis is then extended to give the effect of disturbing or interference velocities, corresponding to an arbitrary potential flow, which are superimposed on a normal rectilinear flow over the airfoil. An approximate method is presented for obtaining the velocities induced by a 2-dimensional airfoil at a point some distance away. In certain cases this method has considerable advantage over the simple "lifting line" procedure usually adopted. The interference effects for a 2-dimensional biplane are considered in the light of the previous analysis. The results of the earlier sections are then applied to the general problem of the interference effects for a 3-dimensional biplane, and formulæ and charts are given which permit the characteristics of the individual wings of an arbitrary biplane without sweepback or dihedral to be calculated. In the final section the conclusions drawn from the application of the theory to a considerable number of special cases are discussed, and curves are given illustrating certain of these conclusions and serving as examples to indicate the nature of the agreement between the theory and experiment.

I. INTRODUCTION

In the autumn of 1928 Dr. Theodor von Karman, in a series of lectures at the California Institute of Technology, presented the elements of a new approximate theory of thin airfoils, and also gave certain extensions and applications of the theory to the 2-dimensional biplane problem. The present author was interested in the question of the interference effects for a 3-dimensional biplane and attempted the extension of the theory to this problem. Since the airfoil theory had never been published, Doctor von Karman suggested to the author that the latter work it over and prepare it for publication along with the biplane analysis. The following paper submitted to the National Advisory Committee for Aeronautics for its consideration relative to publication as a technical report, is the result of the effort to do this. The material in sections II to IV is based largely on Karman's ideas, although the author must accept the responsibility for the details of the analysis, since they frequently differ widely from those given by Karman. In many cases, also, the original theory has been considerably amplified and extended. The 3-dimensional biplane theory itself has been developed entirely independently.

II. THE THIN AIRFOIL IN AN UNDISTURBED FLOW

The present development of the theory of thin airfoils, in common with many others, is based on the method of conformal transformation in which two complex planes are connected by a relation of the form $z=f(\zeta)$. Here $z=x+iy$ is the complex variable for one of the planes, $\zeta=\xi+i\eta$ is the complex variable for the other plane, and f is an analytic function of ζ. Such a relation transforms any curve, and in particular any streamline, in the ζ plane into a corresponding curve or streamline in the z plane. If the streamlines in the first plane correspond to an irrotational motion, the transformed flow in the other plane will have the same property. If the velocity of such a flow is known at any point in the ζ plane the velocity of the transformed flow at the corresponding point in the z plane is given by

$$q_x-iq_y=\frac{q_\xi-iq_\eta}{\frac{dz}{d\zeta}}$$

where $q_{subscript}$ is the appropriate component of velocity. Very often only the absolute magnitudes of the corresponding velocities need be considered, so that the following simplified form of the above relation may be used:

$$q_z=\frac{q_\zeta}{\left|\frac{dz}{d\zeta}\right|}$$

where q_z, q_ζ are the absolute values of the resultant velocities and the bars signify absolute value. For a very lucid account of conformal transformation as applied to aerodynamics the reader is referred to Chapter VI of Reference 1, in which these formulæ are deduced.

In the present work we shall use only the very simple transformation—

$$z=\zeta+\frac{1}{\zeta} \tag{1}$$

so that the transformation relation for the velocities has the form—

$$q_z=\frac{q_\zeta}{\left|1-\frac{1}{\zeta^2}\right|} \tag{2}$$

We start with an arbitrary flow about a unit circle with center at the origin of the ζ plane. Then (1) gives the corresponding flow about what may be considered as a straight-line airfoil in the z plane, extending between $x=\pm 2$. The resultant force and moment acting on this straight-line airfoil can be easily determined for any simple flow. The problem is now to deform this straight line into a more or less arbitrary airfoil shape and then determine the force and moment acting on this final airfoil. If $y=y(x)$ is the equation of the airfoil, then by taking y as a double-valued function we can construct an airfoil of arbitrary camber and thickness. However Jeffreys has shown (Reference 2) that for normal airfoils the effect of thickness is small, so that, in view of the difficulties introduced into the present method by the consideration of thickness, we shall confine ourselves to the discussion of airfoils of zero thickness. These line airfoils which we shall discuss may be considered as the mean camber lines of actual airfoils of finite thickness. We impose the restriction that the ordinates of the airfoils shall everywhere be small with respect to their chords, and for the purpose of actually carrying out the transformations we also make the additional restriction that the leading and trailing edges shall coincide with the points $x=-2$, $+2$, respectively. Then y will be a single valued function of x and the airfoil will be a curve between $x=\pm 2$, which is slightly distorted from the original straight line.

In accordance with (1) there will be a corresponding curve in the ζ plane which will differ slightly from the original unit circle. For simplicity we shall refer to this curve as the pseudocircle. If r, θ represent polar coordinates in the ζ plane and if on the pseudo circle we write $r=1+\epsilon$, where ϵ is a variable whose value is everywhere small compared with 1, then the equation of the pseudocircle may be written in complex form as

$$\zeta=(1+\epsilon)e^{i\theta} \tag{3}$$

The equation of the airfoil is obtained from this by applying (1). Since ϵ is a small quantity we neglect its second and higher powers and in this way obtain very simply the equation of the airfoil in complex form:

$$z=2\ (\cos\theta+i\epsilon\sin\theta)$$

or in the more convenient parametric form:

$$\begin{cases} x=2\cos\theta \\ y=2\epsilon\sin\theta \end{cases} \tag{4}$$

It will later be necessary to find the velocity along the surface of the airfoil, being given that along the pseudocircle. Since both velocities will be tangential to the corresponding surfaces we shall require only the relation between the absolute magnitudes of the velocities at corresponding points of the two curves, which is readily obtained from (2) and (3). Neglecting powers of ϵ we get as a first approximation:

$$q_z=\frac{q_\zeta}{2\sin\theta} \tag{5}$$

where q_z and q_ζ are velocities at corresponding points P_z and P_ζ (fig. 1).

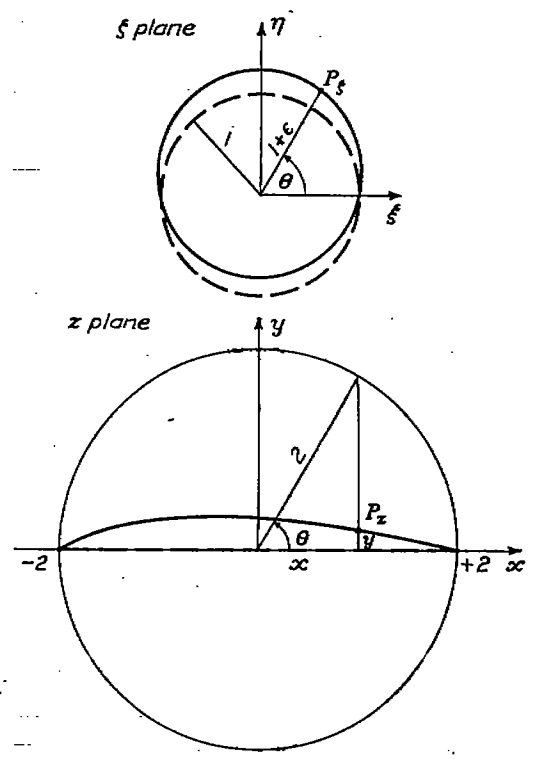

FIGURE 1

If q_r, q_θ represent the indicated components of velocity in the ζ plane and q_y, q_x the components at the corresponding point in the z plane, then within the limits of accuracy of our approximation we may write the velocity at the pseudocircle as q_θ and that at the airfoil as q_x. Hence, taking into account the conventions as to directions indicated in Figure 1, equation (5) becomes:[1]

$$q_x=\frac{-q_\theta}{2\sin\theta} \tag{6}$$

[1] Both equations (5) and (6) should properly be multiplied by factors of the form $[1+0(\epsilon)]$ where $0(\epsilon)$ denotes a quantity which is of the order of magnitude of ϵ and which vanishes with ϵ. Hence these two equations are exact at the unit circle and are in error by quantities of the order ϵ at the pseudocircle. When the relation (5) is used, however, as for instance in obtaining (18) from the preceding equation, it is applied either at the unit circle or, if at the pseudocircle, it is used to transform a small velocity increment which is already of the order ϵ. Hence the error introduced into any of the expressions in which the approximate relations (5) and (6) have been employed is of the order ϵ^2 in agreement with the degree of approximation throughout the theory.

The present method of determining airfoil characteristics is essentially the following: The conditions for an arbitrarily assumed flow about the straight line airfoil are taken as known, and the changes produced when the straight line is deformed into a curved airfoil are then calculated. The actual analysis, however, is carried out in the ζ plane and the final results transferred back to the z plane. Let subscripts zero refer to the original conditions of a flow about the straight line airfoil or unit circle, i. e. q_{r_0}, q_{θ_0} are the velocities in the ζ plane for the flow in which the unit circle is a streamline. Then in order to distort the flow so that the pseudocircle may be a streamline we must superimpose on the original flow additional velocities q_r', q_θ'. The unique feature in von Karman's method is that it permits a direct determination of these additional velocities based on very simple physical reasoning. The following discussion, while not identical with that given by von Karman, is the same in principle. Consider the conditions at a small element (fig. 2) in order that the

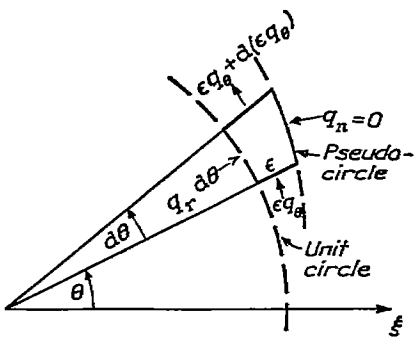

FIGURE 2

pseudocircle may be a streamline, i. e. no flow across it. Since ϵ is small we may, to a first approximation, take q_θ as constant along any radius between the circle and the pseudocircle. Then

$$q_r d\theta = d(\epsilon q_\theta)$$

$$q_r = \frac{d}{d\theta}(\epsilon q_\theta)$$

According to our notation

$$q_r = q_{r_0} + q_r'$$

$$q_\theta = q_{\theta_0} + q_\theta'$$

but at the unit circle $q_{r_0} = 0$ and hence

$$q_r' = \frac{d}{d\theta}(\epsilon q_{\theta_0}) \tag{7}$$

where, within the limits of our accuracy, q_r' may be taken either at the circle or the pseudocircle, and similarly for q_{θ_0}. q_θ' has been omitted from the parenthesis of (7), since its inclusion introduces only terms of order ϵ^2 into q_r'.

In order to find q_θ' we employ a known relation in potential theory. If ϕ is a potential function, i. e. a scalar function whose gradient gives the velocity for an irrotational motion, then the general expression for ϕ in polar coordinates, subject to the restriction $\phi = 0$ at $r = \infty$ is

$$\phi = \sum_{n=1}^{\infty} \frac{A_n \sin n\theta + B_n \cos n\theta}{n r^n}$$

and the corresponding velocity components are given by

$$q_r = \frac{\partial \phi}{\partial r} = -\sum_{n=1}^{\infty} \frac{A_n \sin n\theta + B_n \cos n\theta}{r^{n+1}}$$

$$q_\theta = \frac{1}{r}\frac{\partial \phi}{\partial \theta} = \sum_{n=1}^{\infty} \frac{A_n \cos n\theta - B_n \sin n\theta}{r^{n+1}}$$

By a little calculation it can be verified that

$$\frac{1}{2\pi}\int_0^{2\pi} \sum_{n=1}^{\infty} \frac{A_n \sin n\theta + B_n \cos n\theta}{r^{n+1}} \cot \frac{\theta - \tau}{2}\, d\theta$$

$$= \sum_{n=1}^{\infty} \frac{A_n \cos n\tau - B_n \sin n\tau}{r^{n+1}}$$

and hence

$$q_\theta(\tau, r) = -\frac{1}{2\pi}\int_0^{2\pi} q_r(\theta, r) \cot \frac{\theta - \tau}{2}\, d\theta \tag{8}$$

where τ is an arbitrary value of the variable θ. This is a perfectly general result holding whenever q_r and q_θ are velocities derived from a potential function (i. e. for an irrotational flow) which vanishes at infinity.[2] Taking ϕ as the potential function for our additional or superimposed flow we get at the psuedocircle as a special case of (8)

$$q_\theta'(\tau) = -\frac{1}{2\pi}\int_0^{2\pi} q_r'(\theta) \cot \frac{\theta - \tau}{2}\, d\theta$$

which gives, in view of (7),

$$q_\theta'(\tau) = -\frac{1}{2\pi}\int_0^{2\pi} \frac{d}{d\theta}(\epsilon q_{\theta_0}) \cot \frac{\theta - \tau}{2}\, d\theta \tag{9}$$

Starting with an assumed velocity around the unit circle equation (9) gives the velocity $q_\theta = q_{\theta_0} + q_\theta'$ at the pseudocircle from which the velocity at the airfoil may be determined from (6). In general q_θ will not be zero at $\theta = 0$ which implies that the velocity q_s at the trailing edge of the airfoil will be infinite. We now impose Kutta's condition that at the trailing edge the flow must be smooth; i. e., the velocity at this point must be finite. Then, since $\theta = 0$ corresponds

[2] It should be remarked that for all integrals of the form (8) the principal value of the integral is to be taken. The reader interested in a mathematically more rigorous derivation of equation (8) is referred to page 9 of H. Villat's book "La Resistance de Fluids," Scientia Series, Gauthier-Villars, Paris (1920).

to the trailing edge, and in view of (6), Kutta's condition takes the form

$$q_\theta(0)=0$$

In order to satisfy this condition we must superimpose upon the existing flow a circulation flow characterized by a circulation Γ and by velocities at the airfoil or pseudocircle q_Γ. Then Kutta's condition becomes

$$q_\theta(0)=q_{\theta_0}(0)+q_\theta'(0)+q_{\theta_\Gamma}(0)=0 \tag{10}$$

This equation permits the determination of Γ in the following manner. Since y is an even function of θ and hence ϵ is an odd function (cf. equation 4), therefore the perimeter of the pseudocircle is to a first approximation the same as that of the unit circle, so that the tangential velocity due to a circulation Γ about the pseudocircle is, within our accuracy, the same as that which would exist at the unit circle due to a circulation Γ about it. Hence at the pseudocircle

$$q_{\theta_\Gamma}(\theta)=\text{constant}=-\frac{\Gamma}{2\pi}$$

where Γ is taken as positive when the tangential flow is clockwise about the pseudocircle or airfoil (cf. fig. 1). Then (10) gives for the determination of Γ.

$$\Gamma=2\pi[q_{\theta_0}(0)+q_\theta'(0)]$$

Introducing expression (9) for q_θ'

$$\Gamma=2\pi q_{\theta_0}(0)-\int_0^{2\pi}\frac{\mathrm{d}}{\mathrm{d}\theta}(\epsilon q_{\theta_0})\cot\frac{\theta}{2}\,\mathrm{d}\theta \tag{11}$$

and the total tangential velocity at any point, θ, of the pseudocircle is

$$q_\theta(\theta)=q_{\theta_0}(\theta)+q_\theta'(\theta)-\frac{\Gamma}{2\pi},\text{ or} \tag{12'}$$

$$q_\theta(\theta)=q_{\theta_0}(\theta)-q_{\theta_0}(0)-\frac{1}{2\pi}\int_0^{2\pi}\frac{\mathrm{d}}{\mathrm{d}\tau}(\epsilon q_{\theta_0})\cot\frac{\tau-\theta}{2}\,\mathrm{d}\tau+\frac{1}{2\pi}\int_0^{2\pi}\frac{\mathrm{d}}{\mathrm{d}\tau}(\epsilon q_{\theta_0})\cot\frac{\tau}{2}\,\mathrm{d}\tau \tag{12}$$

(Notice that the variable of integration has been changed from θ to τ.) These are the fundamental equations of the present airfoil theory.

We shall first apply these equations to the determination of the lift and moment coefficients of an airfoil at an angle of attack α in a uniform, rectilinear flow. The velocity at infinity in the z plane is taken as having the constant value U inclined at an angle α to the positive x axis. Then since the transformation (1) leaves the region at infinity unaltered we shall have these same conditions in the ζ plane. The velocity about a circle in such a flow is well known. In our notation we have

$$\begin{cases} q_{\theta_0}=-2U\sin(\theta-\alpha) \\ q_{\theta_0}(0)=2U\sin\alpha \end{cases} \tag{13}$$

In finding the lift we make use of the fortunate fact that a circulation is invariant to a conformal transformation. In other words, if we are given the circulation about any closed curve in a plane, and are also given a second plane connected with the first by a conformal transformation, then the circulation about the corresponding curve in the second plane is identical with that about the original curve in the first plane. Hence in our case the lift of the airfoil is given by the familiar Kutta-Joukowsky relation

$$L=\rho U\Gamma$$

where ρ is the density of the fluid and Γ is the circulation about the pseudocircle as given by (11).

Introducing expressions (13) into (11) we get

$$\Gamma=4\pi U\sin\alpha+2U\int_0^{2\pi}\frac{\mathrm{d}}{\mathrm{d}\theta}[\epsilon\sin(\theta-\alpha)]\cot\frac{\theta}{2}\,\mathrm{d}\theta$$

In simplifying this expression it is convenient to perform a partial integration, but since the integral is improper this step requires a little investigation. Near $\theta=0$ we have along the airfoil or pseudocircle from (4)

$$\frac{y}{2-x}=\frac{\epsilon\sin\theta}{1-\cos\theta}=\frac{\epsilon}{\tan\frac{\theta}{2}}\simeq 2\frac{\epsilon}{\theta}$$

But near $\theta=0$ $\frac{y}{2-x}=K$ (say) is the slope of the tangent to the airfoil at the trailing edge so that for any normal airfoil K is at most of order of magnitude 1. Hence

$$\text{for } \theta\to 0\ \epsilon=\frac{K}{2}\theta,\text{ where } |K|<1$$

Using this fact the ordinary methods of elementary calculus show that the partial integration may be performed and that the integrated term vanishes, giving

$$\Gamma=4\pi U\sin\alpha+2U\int_0^{2\pi}\frac{\epsilon\sin(\theta-\alpha)}{1-\cos\theta}\,\mathrm{d}\theta$$

For all practical purposes the angle of attack is small, so that in the future we shall throughout call α a small quantity, writing

$$\sin\alpha=\alpha,\ \cos\alpha=1$$

Hence

$$\Gamma=4\pi U\alpha+2U\int_0^{2\pi}\frac{\epsilon}{1-\cos\theta}(\sin\theta-\alpha\cos\theta)\mathrm{d}\theta,$$

or introducing the airfoil ordinate by means of (4)

$$\Gamma=4\pi U\alpha+U\int_0^{2\pi}\frac{y\mathrm{d}\theta}{1-\cos\theta}-U\alpha\int_0^{2\pi}\frac{y\cot\theta}{1-\cos\theta}\mathrm{d}\theta$$

Since y is an even function of θ the second integrand is odd and the first is even. Hence the second integral vanishes and we have:

$$\Gamma=4\pi U\alpha+2U\int_0^{\pi}\frac{y\mathrm{d}\theta}{1-\cos\theta}$$

Defining the lift coefficient in the usual way, employing however the German notation in which t=chord,

$$\Gamma=\rho U\Gamma=C_L\frac{\rho}{2}U^2t$$

In our case $t=4$ so that

$$C_L=\frac{\Gamma}{2U}$$

and

$$C_L=2\pi\alpha+\int_0^{\pi}\frac{y\mathrm{d}\theta}{1-\cos\theta}\qquad(\text{chord}=4)\tag{14}$$

For purposes of theoretical analysis this is a very convenient form of the expression for C_L but for finding the characteristics of an actual airfoil the following alternative forms are more suitable. They are obtained by replacing θ by x in accordance with (4)

$$\begin{cases} C_L=2\pi\alpha+\dfrac{1}{2}\displaystyle\int_{-2}^{+2}\frac{y\mathrm{d}x}{\left(1-\frac{x}{2}\right)\sqrt{1-\left(\frac{x}{2}\right)^2}} & (\text{chord}=4)\\[2ex] C_L=2\pi\alpha+2\displaystyle\int_{-1}^{+1}\frac{y\mathrm{d}x}{(1-x)\sqrt{1-x^2}} & (\text{chord}=2)\end{cases}\tag{15}$$

Note that in (14), (15) the airfoil chord lies along the x axis.

Before discussing these equations it will be advantageous to deduce the corresponding expressions for the moment coefficient. Throughout the present paper the moment will be measured about the center of the airfoil—i. e., the origin in the z plane—and will be considered as positive when it tends to raise the leading edge of the airfoil, i. e., stalling moments are positive. There is, unfortunately, no simple analogue of the Kutta-Joukowsky equation for moments, so that pressures must actually be integrated over the airfoil, which makes this calculation somewhat more tedious than the corresponding one for lift.

The general expression for pitching moment may be written

$$M=\int px\,\mathrm{d}x\tag{16}$$

where p is the pressure at any point in the fluid and the path of integration is taken in a clockwise direction about the surface of the airfoil. Introducing the variable θ through the substitution used before, $x=2\cos\theta$,

$$M=4\int_0^{2\pi}p\sin\theta\cos\theta\,\mathrm{d}\theta\tag{17}$$

At the airfoil Bernoulli's equation gives

$$p=H-\frac{\rho}{2}q_x^2$$

where H is the total pressure head and is constant throughout the fluid. Substituting this in (17) the term containing H vanishes and replacing q_x by q_θ according to (6) we have

$$M=-\frac{\rho}{2}\int_0^{2\pi}q_\theta^2\cot\theta\,\mathrm{d}\theta$$

It is convenient to consider the moment in two parts: M_1=moment acting on the straight line airfoil at angle of attack α; M_2=additional moment due to the deformation of the straight line into a curved airfoil. Considering first M_1, $\epsilon=0$ for the straight line airfoil and hence from (12) and (13)

$$q_\theta=-2U[\sin\theta+\alpha(1-\cos\theta)]$$

$$\therefore M_1=-2\rho U^2\int_0^{2\pi}[\sin^2\theta+\alpha^2(1-\cos\theta)^2+2\alpha\sin\theta(1-\cos\theta)]\cot\theta\,\mathrm{d}\theta$$

$$=+4\rho U^2\alpha\int_0^{2\pi}\cos^2\theta\,\mathrm{d}\theta$$

and finally

$$M_1=4\pi\alpha\rho U^2$$

As the straight line is deformed into the curved airfoil the velocities q_x are changed by small amounts corresponding to the changes in q_θ as the circle is deformed into the pseudocircle. We must calculate the additional moment M_2 due to these changes. Let p^*, q_x^*, q_θ^* represent pressure and velocities for the straight line airfoil ($y=\epsilon=0$), and let Δp, Δq_x, Δq_θ represent the additional pressure and velocities introduced by the airfoil camber. Then from Bernoulli's equation

$$p^*+\frac{\rho}{2}(q_x^*)^2=p^*+\Delta p+\frac{\rho}{2}(q_x^*+\Delta q_x)^2$$

and neglecting the small term containing $(\Delta q_x)^2$

$$\Delta p=-\rho q_x^*\Delta q_x$$

Replacing p in (17) by Δp we have

$$M_2=-4\rho\int_0^{2\pi}q_x^*\Delta q_x\sin\theta\cos\theta\,\mathrm{d}\theta$$

or

$$M_2=-\rho\int_0^{2\pi}q_\theta^*\Delta q_\theta\cot\theta\,\mathrm{d}\theta\tag{18}$$

q_θ^* is given by the first two terms of (12) and Δq_θ by the last two. Hence using (13)

$$M_2=4\rho U^2\int_0^{2\pi}[\sin\theta+\alpha(1-\cos\theta)]\cot\theta\left\{\frac{1}{2\pi}\int_0^{2\pi}\frac{d}{d\tau}[\epsilon(\sin\tau-\alpha\cos\tau)]\cot\frac{\tau-\theta}{2}d\tau-\frac{1}{2\pi}\int_0^{2\pi}\frac{d}{d\tau}[\epsilon(\sin\tau-\alpha\cos\tau)]\times\cot\frac{\tau}{2}d\tau\right\}d\theta.$$

The second integral inside the curly brackets is a constant with respect to θ so that upon integration with respect to θ the term containing it vanishes. Therefore

$$M_2=\frac{2\rho U^2}{\pi}\int_0^{2\pi}[\cos\theta+\alpha(1-\cos\theta)\cot\theta]\left\{\int_0^{2\pi}\frac{d}{d\tau}[\epsilon(\sin\tau-\alpha\cos\tau)]\cot\frac{\tau-\theta}{2}d\tau\right\}d\theta=\frac{2\rho U^2}{\pi}\int_0^{2\pi}\frac{d}{d\tau}[\epsilon(\sin\tau-\alpha\cos\tau)]\left\{\int_0^{2\pi}\cos\theta\cot\frac{\tau-\theta}{2}d\theta\right\}d\tau$$
$$+\frac{2\rho U^2}{\pi}\alpha\int_0^{2\pi}\frac{d}{d\tau}[\epsilon(\sin\tau-\alpha\cos\tau)]\left\{\int_0^{2\pi}(1-\cos\theta)\times\cot\theta\cot\frac{\tau-\theta}{2}d\theta\right\}d\tau$$

The second integral in the last expression for M_2 is apparently of order $\alpha\epsilon$ but a somewhat lengthy calculation shows it to be actually of order $\alpha^2\epsilon$, so that to our degree of approximation it can certainly be neglected. In order to perform the integration with respect to θ in the remaining part of M_2 we write $\tau-\theta=u$. Then

$$\int_0^{2\pi}\cos\theta\cot\frac{\tau-\theta}{2}d\theta=\int_\tau^{\tau-2\pi}(\cos\tau\cos u+\sin\tau\sin u)\frac{1+\cos u}{\sin u}du$$
$$=\cos\tau\int_0^{2\pi}\cot u(1+\cos u)du+\sin\tau\int_0^{2\pi}(1+\cos u)du=2\pi\sin\tau$$

so that

$$M_2=4\rho U^2\int_0^{2\pi}\sin\tau\frac{d}{d\tau}[\epsilon(\sin\tau-\alpha\cos\tau)]d\tau$$

Integrating by parts

$$M_2=-4\rho U^2\int_0^{2\pi}\epsilon(\sin\tau-\alpha\cos\tau)\cos\tau\,d\tau$$

and since ϵ is an odd function of τ

$$M_2=-8\rho U^2\int_0^{\pi}\epsilon\sin\tau\cos\tau\,d\tau$$

or changing the variable of integration to θ and replacing ϵ by y from (4)

$$M_2=-4\rho U^2\int_0^{\pi}y\cos\theta\,d\theta$$

Combining the results for M_1 and M_2 we have, for the total moment acting on a curved airfoil at an angle of attack α,

$$M=M_1+M_2=4\pi\alpha\rho U^2-4\rho U^2\int_0^{\pi}y\cos\theta\,d\theta$$

Defining C_M by

$$M=C_M\frac{\rho}{2}U^2t^2$$

where in our case $t=4$

$$C_M=\frac{\pi}{2}\alpha-\frac{1}{2}\int_0^{\pi}y\cos\theta\,d\theta\ (\text{chord}=4) \tag{19}$$

In terms of the airfoil coordinates this gives

$$\begin{cases} C_M=\dfrac{\pi}{2}\alpha-\dfrac{1}{8}\displaystyle\int_{-2}^{+2}\frac{yx\,dx}{\sqrt{1-\left(\frac{x}{2}\right)^2}} & (\text{chord}=4)\\ C_M=\dfrac{\pi}{2}\alpha-\displaystyle\int_{-1}^{+1}\frac{yx\,dx}{\sqrt{1-x^2}} & (\text{chord}=2)\end{cases} \tag{20}$$

Note that in (19) and (20) the airfoil chord lies along the x axis.

Expressions (15) and (20) are essentially the same as those first given by Munk (Reference 3). They illustrate very clearly that the lift coefficient of a thin airfoil may be split up into two parts, the first due to angle of attack with a constant center of pressure 25 per cent of the chord back from the leading edge, and the second due to camber whose magnitude and center of pressure are independent of the angle of attack but depend upon the camber.

In spite of the large amount of discussion which these equations have received at the hands of various authors there are one or two points which should be mentioned explicitly here. The first relates to the agreement which has been observed between these expressions and experiment. The so-called angles of zero lift and zero moment as predicted by (15) and (20) are found to be verified quite satisfactorily, but the theoretical slope of lift and moment coefficient curves is not realized in practice, the discrepancies being roughly the same in both cases. Hence a very simple and satisfactory method of bringing both expressions into agreement with experiment is to multiply both by a constant factor which has been referred to as the "efficiency factor" and which we shall denote by $\eta\cdot\eta$ varies somewhat from wing section to wing section, but if experimental data on a particular section are lacking $\eta=0.875$ may safely be taken as a good average value.

The second point is largely one of notation. In the present method of derivation of the expressions for C_L and C_M it was necessary to take the airfoil chord as lying along the x axis and extending between the points $x=-2$ and $x=+2$. In the later analysis of section III it will be convenient to take the x axis in the direction of the velocity U in which case we

shall again require the airfoil trailing edge to lie upon the x axis at the point $x=+2$, but shall vary the angle of attack by rotating the airfoil chord about this point, so that the leading edge will no longer be required to lie upon the x axis. In this case y is measured as before from the x axis which implies that for a given airfoil $y=y(x)$ will vary with the angle of attack. The formulæ deduced in this section remain valid even under this changed notation, although in applying them it must be remembered that α is to be placed equal to zero. We shall verify this fact for equations (14) and (19).

Consider the same airfoil at the same angle of attack from the two points of view. Let primed quantities denote conditions relative to the new system and unprimed quantities conditions relative to the system previously employed (cf. fig. 3).

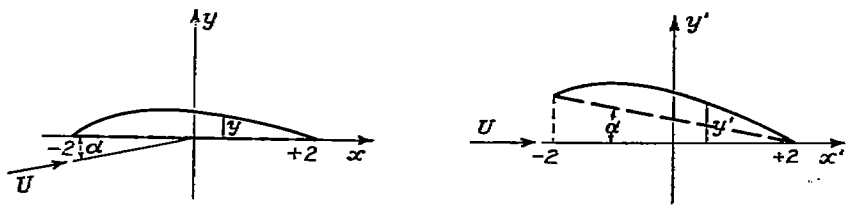

FIGURE 3

Then using the old system C_L and C_M are given by (14) and (19). In the new system we have provisionally (since we write $x=2\cos\theta$ in both cases)—

$$C_L'=\int_0^\pi \frac{y'd\theta}{1-\cos\theta}$$

$$C_M'=-\frac{1}{2}\int_0^\pi y'\cos\theta d\theta$$

Since, however, α is small we may write with sufficient accuracy

$$y'=(2-x)\alpha+y=2(1-\cos\theta)\alpha+y$$

so that

$$C_L'=2\alpha\int_0^\pi d\theta+\int_0^\pi \frac{yd\theta}{1-\cos\theta}$$

$$C_M'=\alpha\int_0^\pi \cos^2\theta d\theta-\frac{1}{2}\int_0^\pi y\cos\theta d\theta$$

or

$$C_L'=2\pi\alpha+\int_0^\pi \frac{yd\theta}{1-\cos\theta}$$

$$C_M'=\frac{\pi}{2}\alpha-\frac{1}{2}\int_0^\pi y\cos\theta d\theta$$

which are identical with expressions (14) and (19) for C_L and C_M. Hence the only restriction on the equations of this section is that the trailing edge must lie on the x axis at $x=+2$ ($x=+1$ for chord$=2$), and that y must be small compared with the chord. α in general is then the angle between the velocity U and the positive x axis. The mathematical reason for the removal of the restriction on the leading edge position lies in the fact that for the convergence of the integrals of this section it is only necessary that $y=0$ for $\theta=0$, and it is not necessary that $y=0$ for $\theta=\pi$.

The methods of this section may be applied to the calculation of the lift or moment of any portion of the airfoil, for example the lift and hinge moment of an airfoil flap, by choosing the appropriate origin and limits of integration in (16) and in the corresponding equation for lift. In carrying out this procedure it appears that very unpleasant integrals are sometimes encountered. In such a case an alternative method which avoids the use of integrals is possible which will be briefly outlined here. If ϵq_{θ_0} be expressed as a Fourier series then from (7) q_r' may also be so expressed. q_θ' may then be found in the same form by employing the series expressions preceding (8), and finally q_θ may be obtained from an expression analogous to (12) in a form containing no integrals. Having q_θ the determination of lift and moment follows the procedure already discussed. The forces and moments acting on an airfoil with flap have been obtained in this manner with comparatively little difficulty, and the earlier results of Glauert (Reference 4) entirely verified.

III. THE EFFECT OF SMALL SUPERIMPOSED VELOCITIES

Consider a second irrotational flow superimposed upon the flow of the previous section, the additional flow being such as would give velocities δq_x and δq_y at the airfoil if the latter were not present. Due to the principle of superposition, which states that the resultant of several irrotational flows is given by the vector addition of the velocities of the individual flows, the effect of this additional flow upon the airfoil characteristics can be determined by merely superimposing the additional velocities upon those which were found in Section II. It must be remembered, however, that Kutta's condition is to be satisfied after the superposition.

The analysis follows closely that of the last section, but a few important changes must be noted. Since the notation tends to become cumbersome we shall not carry through the calculation for a general q_{θ_0} as was done before, but shall immediately specify the particular q_{θ_0} and q_{r_0} which are of practical interest. We adopt the second system of notation as described at the end of Section II, taking the velocity U as parallel to the X axis. Since we have already seen that the radial velocity at the unit circle is zero for

the original flow without superimposed velocities, and from (13) $q_{\theta_0}=-2U\sin\theta$, we have

$$q_{\theta_0}=-2U\sin\theta+\delta q_\theta$$

$$q_{r_0}=\delta q_r$$

where from (5) and (6)

$$\delta q_\theta=-\delta q_x\cdot 2\sin\theta \tag{21}$$

$$\delta q_r=+\delta q_y\cdot 2\sin\theta$$

From the two sets of equations preceding (7), the analogue of (7) becomes

$$q_r'=-\frac{\mathrm{d}}{\mathrm{d}\theta}[\epsilon\,(U+\delta q_x)\;2\sin\theta]-\delta q_r$$

or introducing y from (4)

$$q_r'=-U\frac{\mathrm{d}}{\mathrm{d}\theta}\left[y\left(1+\frac{\delta q_x}{U}\right)\right]-\delta q_r$$

In order to carry out the subsequent analysis it will be necessary to make certain simplifying assumptions as to the nature of the superimposed velocities. The first of these assumptions, which will be introduced at this point, is that in the cases considered in this paper the variations in δq_x over the airfoil chord are small and relatively unimportant in their effects. This assumption permits the variable δq_x to be replaced by a constant which will be taken to be the value of δq_x at the center of the airfoil, and will be written in the future simply as δq_x. Then

$$q_r'=-U\left(1+\frac{\delta q_x}{U}\right)\frac{\mathrm{d}y}{\mathrm{d}\theta}-\delta q_r$$

so that, corresponding to (9),

$$q_\theta'(\theta)=\frac{U}{2\pi}\left(1+\frac{\delta q_x}{U}\right)\int_0^{2\pi}\frac{\mathrm{d}y}{\mathrm{d}\tau}\cot\frac{\tau-\theta}{2}\,\mathrm{d}\tau+\frac{U}{2\pi}\int_0^{2\pi}\frac{\delta q_r}{U}(\tau)\cot\frac{\tau-\theta}{2}\,\mathrm{d}\tau.$$

In this equation and until (25′) $\frac{\delta q_r}{U}$ is written as $\frac{\delta q_r}{U}(\tau)$ to indicate that $\frac{\delta q_r}{U}$ is to be considered as a function of τ not θ. From (25′) on the argument (τ) is omitted since θ and τ do not occur simultaneously and no ambiguity is possible.

Introducing Kutta's condition to determine the circulation,

$$\Gamma=2\pi\,[q_{\theta_0}(0)+q_\theta'(0)]$$

$$\therefore\frac{\Gamma}{2\pi}=\delta q_\theta(0)+\frac{U}{2\pi}\left(1+\frac{\delta q_x}{U}\right)\int_0^{2\pi}\frac{\mathrm{d}y}{\mathrm{d}\tau}\cot\frac{\tau}{2}\,\mathrm{d}\tau+\frac{U}{2\pi}\int_0^{2\pi}\frac{\delta q_r}{U}(\tau)\cot\frac{\tau}{2}\,\mathrm{d}\tau$$

δq_x, δq_y are assumed to be everywhere finite, therefore from (21) $\delta q_\theta(0)=\delta q_r(0)=0$. Hence the final equation for the total tangential velocity at the pseudo-circle is, from (12′),

$$\begin{aligned}q_\theta(\theta)=&\left\{-2U\sin\theta+\frac{U}{2\pi}\int_0^{2\pi}\frac{\mathrm{d}y}{\mathrm{d}\tau}\cot\frac{\tau-\theta}{2}\,\mathrm{d}\tau-\frac{U}{2\pi}\int_0^{2\pi}\frac{\mathrm{d}y}{\mathrm{d}\tau}\cot\frac{\tau}{2}\,\mathrm{d}\tau\right\}\\&+\left\{\delta q_\theta+\frac{\delta q_x}{U}\frac{U}{2\pi}\int_0^{2\pi}\frac{\mathrm{d}y}{\mathrm{d}\tau}\cot\frac{\tau-\theta}{2}\,\mathrm{d}\tau-\frac{\delta q_x}{U}\frac{U}{2\pi}\int_0^{2\pi}\frac{\mathrm{d}y}{\mathrm{d}\tau}\cot\frac{\tau}{2}\,\mathrm{d}\tau\right.\\&\left.+\frac{U}{2\pi}\int_0^{2\pi}\frac{\delta q_r}{U}(\tau)\cot\frac{\tau-\theta}{2}\,\mathrm{d}\tau-\frac{U}{2\pi}\int_0^{2\pi}\frac{\delta q_r}{U}(\tau)\cot\frac{\tau}{2}\,\mathrm{d}\tau\right\}\end{aligned} \tag{22}$$

where the terms in the first bracket are those for the original undisturbed flow, and those in the second bracket are the additional terms introduced by the superimposed flow: δq_x, δq_y.

In the present case it is convenient to integrate for both the moment and the lift. The equation (16) has already been given for the moment; the corresponding one for the lift is

$$L=-\oint p\,\mathrm{d}x$$

so that

$$\begin{cases}L=-2\int_0^{2\pi}p\sin\theta\,\mathrm{d}\theta\\M=4\int_0^{2\pi}p\sin\theta\cos\theta\,\mathrm{d}\theta\end{cases} \tag{23}$$

We follow the previous method of splitting up the moment (or lift) into two parts the second of which may be considered as a correction factor. In this case, however, we take the first part, L_0 or M_0, as being that for the curved airfoil in the undisturbed flow where $\delta q_x=\delta q_y=0$. Then the additional part, ΔL or ΔM, is the additional effect introduced by δq_x and δq_y. As before we let p^*, q_θ^*, etc., denote conditions corresponding to L_0, M_0, and let Δp, Δq_θ, etc., denote the additional pressures and velocities introduced by the superimposed flow, δq_x, δq_y. C_{L_0} and C_{M_0} have already been found and are given from (14) and (19) by setting $\alpha=0$, since U is parallel to the x axis.

$$\begin{aligned}C_{L_0}&=\int_0^{\pi}\frac{y\,\mathrm{d}\theta}{1-\cos\theta}\\C_{M_0}&=-\frac{1}{2}\int_0^{\pi}y\cos\theta\,\mathrm{d}\theta\end{aligned} \tag{24}$$

It remains to calculate ΔC_L and ΔC_M. Exactly as in Section II, p must be replaced by Δp in (23), where

$$\Delta p = -\rho q_x{}^* \Delta q_x = -\rho \frac{q_\theta{}^* \Delta q_\theta}{4 \sin^2 \theta}$$

Hence

$$\Delta L = \frac{\rho}{2} \int_0^{2\pi} \frac{q_\theta{}^* \Delta q_\theta}{\sin \theta} \, d\theta$$

$$\Delta M = -\rho \int_0^{2\pi} q_\theta{}^* \Delta q_\theta \cot \theta d\theta.$$

where $q_\theta{}^*$ is given by the first bracket of (22) and Δq_θ by the second bracket. Only the portion of $(q_\theta{}^* \, \Delta q_\theta)$ which is an odd function of θ will furnish any contribution to ΔL and ΔM, so that we may write

$$(25) \quad \begin{cases} \Delta L = \dfrac{\rho}{2} \displaystyle\int_0^{2\pi} \frac{(q_\theta{}^* \Delta q_\theta)_{\text{odd}}}{\sin \theta} \, d\theta \\ \Delta M = -\rho \displaystyle\int_0^{2\pi} (q_\theta{}^* \Delta q_\theta)_{\text{odd}} \cdot \cot \theta \, d\theta. \end{cases}$$

It can readily be shown that all of the integrals of (22) are even functions of θ. Remembering that θ and τ are merely two different notations for the same variable, it follows from the geometry of our conformal transformation that $\tau = +\tau_1$ and $\tau = -\tau_1$ refer at the airfoil to points on the top and bottom surface with the same value of x. Since the airfoil is infinitely thin these points are infinitely close together. y, δq_x, δq_y are assumed to be continuous functions of position so that $y\ (-\tau) = y\ (+\tau)$, $\delta q_x(-\tau) = \delta q_x(+\tau)$, $\delta q_y(-\tau) = \delta q_y(+\tau)$, or y, δq_x, δq_y are all even functions of τ. From (21) it follows that δq_r, δq_θ are odd functions, and hence δq_θ, δq_r, $\frac{dy}{d\tau}$ are all odd functions of τ (or θ). The three integrals in (22) which contain θ may now all be written in the form

$$I\ (\theta) = \int_0^{2\pi} f\ (\tau) \cot \frac{\tau - \theta}{2} \, d\tau, \text{ where } f\ (-\tau) = -f\ (+\tau).$$

But

$$I\ (-\theta) = \int_0^{2\pi} f\ (\tau) \cot \frac{\tau + \theta}{2} \, d\tau$$

and writing $-\tau = \varphi$ (say)

$$I\ (-\theta) = \int_0^{-2\pi} f\ (-\varphi) \cot \frac{\varphi - \theta}{2} \, d\varphi$$

$$= -\int_0^{2\pi} f\ (-\varphi) \cot \frac{\varphi - \theta}{2} \, d\varphi$$

But $f\ (-\varphi) = -f\ (+\ \varphi)$;

$$\therefore I\ (-\theta) = +\int_0^{2\pi} f\ (\varphi) \cot \frac{\varphi - \theta}{2} \, d\varphi = I\ (+\theta)$$

Hence the three integrals containing θ in (22) are even functions of θ, the other three integrals are also even functions since they are constants with respect to θ, and δq_θ is an odd function.

$$\begin{aligned} \therefore (q_\theta{}^* \Delta q_\theta)_{odd} = -\frac{U^2}{\pi} \sin \theta \Big\{ & \int_0^{2\pi} \frac{\delta q_r}{U} (\tau) \cot \frac{\tau - \theta}{2} \, d\tau \\ & - \int_0^{2\pi} \frac{\delta q_r}{U} (\tau) \cot \frac{\tau}{2} d\tau + \frac{\delta q_x}{U} \int_0^{2\pi} \frac{dy}{d\tau} \cot \frac{\tau - \theta}{2} \, d\tau \\ & - \frac{\delta q_x}{U} \int_0^{2\pi} \frac{dy}{d\tau} \cot \frac{\tau}{2} \, d\tau \Big\} \\ & + \frac{U}{2\pi} \delta q_\theta \Big\{ \int_0^{2\pi} \frac{dy}{d\tau} \cot \frac{\tau - \theta}{2} \, d\tau \\ & - \int_0^{2\pi} \frac{dy}{d\tau} \cot \frac{\tau}{2} \, d\tau \Big\} \end{aligned}$$

or using (21) and integrating the last term in each bracket by parts

$$\begin{aligned} (q_\theta{}^* \Delta q_\theta)_{odd} = -\frac{2U^2}{\pi} \sin \theta \Big\{ & \int_0^{2\pi} \frac{\delta q_y}{U} (\tau) \sin \tau \cot \frac{\tau - \theta}{2} \, d\tau \\ & - \int_0^{2\pi} \frac{\delta q_y}{U} (\tau) \, (1 + \cos \tau) \, d\tau \\ & + \frac{\delta q_x}{U} \int_0^{2\pi} \frac{dy}{d\tau} \cot \frac{\tau - \theta}{2} \, d\tau - \frac{\delta q_x}{U} \int_0^{2\pi} \frac{y d\tau}{1 - \cos \tau} \Big\} \end{aligned}$$

Substituting this in the expression for ΔL of (25)

$$\begin{aligned} \Delta L = -\frac{\rho U^2}{\pi} \Big\{ & \int_0^{2\pi} \frac{\delta q_y}{U} (\tau) \sin \tau \left[\int_0^{2\pi} \cot \frac{\tau - \theta}{2} d\theta \right] d\tau \\ & - \int_0^{2\pi} \frac{\delta q_y}{U} (\tau) \, (1 + \cos \tau) \left[\int_0^{2\pi} d\theta \right] d\tau \\ & + \frac{\delta q_x}{U} \int_0^{2\pi} \frac{dy}{d\tau} \left[\int_0^{2\pi} \cot \frac{\tau - \theta}{2} d\theta \right] d\tau \\ & - \frac{\delta q_x}{U} \int_0^{2\pi} \frac{y}{1 - \cos \tau} \left[\int_0^{2\pi} d\theta \right] d\tau \Big\} \end{aligned}$$

and correspondingly

$$\begin{aligned} \Delta M = \frac{2\rho U^2}{\pi} \Big\{ & \int_0^{2\pi} \frac{\delta q_y}{U} (\tau) \sin \tau \left[\int_0^{2\pi} \cos \theta \cot \frac{\tau - \theta}{2} \, d\theta \right] d\tau \\ & - \int_0^{2\pi} \frac{\delta q_y}{U} (\tau) \, (1 + \cos \tau) \left[\int_0^{2\pi} \cos \theta \, d\theta \right] d\tau \\ & + \frac{\delta q_x}{U} \int_0^{2\pi} \frac{dy}{d\tau} \left[\int_0^{2\pi} \cos \theta \cot \frac{\tau - \theta}{2} d\theta \right] d\tau \\ & - \frac{\delta q_x}{U} \int_0^{2\pi} \frac{y}{1 - \cos \tau} \left[\int_0^{2\pi} \cos \theta \, d\theta \right] d\tau \end{aligned}$$

We have seen in Section II that

$$\int_0^{2\pi} \cos \theta \cot \frac{\tau - \theta}{2} \, d\theta = 2\pi \sin \tau$$

and in the same way it is easy to show that

$$\int_0^{2\pi} \cot \frac{\tau - \theta}{2} \, d\theta = 0$$

Hence

$$(25') \quad \begin{cases} \Delta L = 2\rho U^2 \left\{ \dfrac{\delta q_x}{U} \displaystyle\int_0^{2\pi} \frac{y d\tau}{1 - \cos \tau} + \int_0^{2\pi} \frac{\delta q_y}{U} (1 + \cos \tau) \, d\tau \right\} \\ \Delta M = 4\rho U^2 \left\{ \dfrac{\delta q_x}{U} \displaystyle\int_0^{2\pi} \frac{dy}{d\tau} \sin \tau \, d\tau + \int_0^{2\pi} \frac{\delta q_y}{U} \sin^2 \tau \, d\tau \right\} \end{cases}$$

or, returning to the original variable of integration, θ, integrating the first term of ΔM by parts, and defining ΔC_L and ΔC_M in the normal way for our chord of 4,

$$\Delta C_L=\frac{\delta q_x}{U}\int_0^{2\pi}\frac{y\mathrm{d}\theta}{1-\cos\theta}+\int_0^{2\pi}\frac{\delta q_y}{U}(1+\cos\theta)\,\mathrm{d}\theta$$

$$\Delta C_M=-\frac{1}{2}\frac{\delta q_x}{U}\int_0^{2\pi}y\cos\theta\mathrm{d}\theta+\frac{1}{4}\int_0^{2\pi}\frac{\delta q_y}{U}(1-\cos 2\theta)\,\mathrm{d}\theta$$

Remembering that y, δq_y are even functions of θ, and using (24)

$$\Delta C_L=2\frac{\delta q_x}{U}C_{L_0}+2\int_0^{\pi}\frac{\delta q_y}{U}(1+\cos\theta)\,\mathrm{d}\theta$$

$$\Delta C_M=2\frac{\delta q_x}{U}C_{M_0}+\frac{1}{2}\int_0^{\pi}\frac{\delta q_y}{U}(1-\cos 2\theta)\,\mathrm{d}\theta$$

In order to obtain more useful expressions for the two integrals we express $\frac{\delta q_y}{U}$ as a Fourier series in θ, which takes the following form, since $\frac{\delta q_y}{U}$ is an even function,

$$\frac{\delta q_y}{U}=\sum_0^{\infty}A_n\cos n\theta$$

We now introduce our second simplification by assuming that in the cases of most interest $\frac{\delta q_y}{U}$ is a fairly slowly changing function of position, so that at the airfoil it can be satisfactorily approximated by the first three terms of this series. We assume, therefor,

$$\frac{\delta q_y}{U}=A_0+A_1\cos\theta+A_2\cos 2\theta \tag{26}$$

where A_0, A_1, A_2 are constants. Then

$$\Delta C_L=2\frac{\delta q_x}{U}C_{L_0}+2\pi A_0+\pi A_1$$

$$\Delta C_M=2\frac{\delta q_x}{U}C_{M_0}+\frac{\pi}{2}A_0-\frac{\pi}{4}A_2$$

We must now find general expressions for A_0, A_1, A_2, and shall obtain such expressions in terms of an airfoil of arbitrary chord t instead of for the special case of chord=4 which has previously been discussed. Since $\theta=0$ should still represent the trailing edge and $\theta=\pi$ the leading edge, we have as the generalization of (4)

$$x=\frac{t}{2}\cos\theta.$$

Substituting this in (26)

$$\frac{\delta q_y}{U}=A_0-A_2+2\frac{A_1}{t}x+\frac{8A_2}{t^2}x^2$$

Letting the subscript zero denote $x=0$ for the time being,

$$A_0=\left(\frac{\delta q_y}{U}\right)_0+\frac{t^2}{16}\left[\frac{\mathrm{d}^2}{\mathrm{d}x^2}\left(\frac{\delta q_y}{U}\right)\right]_0$$

$$A_1=\frac{t}{2}\left[\frac{\mathrm{d}}{\mathrm{d}x}\left(\frac{\delta q_y}{U}\right)\right]_0$$

$$A_2=\frac{t^2}{16}\left[\frac{\mathrm{d}^2}{\mathrm{d}x^2}\left(\frac{\delta q_y}{U}\right)\right]_0$$

In order to simplify the notation we shall, in the future, drop the subscript zero and let $\frac{\delta q_y}{U}$, as well as $\frac{\delta q_x}{U}$, represent the value of the indicated quantity at the center of the airfoil. Then we have

$$\left\{\begin{aligned}\Delta C_L&=2\frac{\delta q_x}{U}C_{L_0}+2\pi\frac{\delta q_y}{U}+\frac{\pi}{2}t\frac{\mathrm{d}}{\mathrm{d}_x}\left(\frac{\delta q_y}{U}\right)+\frac{\pi}{8}t^2\frac{\mathrm{d}^2}{\mathrm{d}x^2}\left(\frac{\delta q_y}{U}\right)\\ \Delta C_M&=2\frac{\delta q_x}{U}C_{M_0}+\frac{\pi}{2}\frac{\delta q_y}{U}+\frac{\pi}{64}t^2\frac{\mathrm{d}^2}{\mathrm{d}x^2}\left(\frac{\delta q_y}{U}\right)\end{aligned}\right. \tag{27}$$

Each of the terms of (27) has a very simple physical significance. The terms containing $\frac{\delta q_x}{U}$ are just those which would arise if the airfoil were in a rectilinear flow in which the velocity was increased from U to $U+\delta q_x$. Hence they are the increments due to the x component of velocity, and may conveniently be denoted by $\Delta_x C_L, \Delta_x C_M$. $\frac{\delta q_y}{U}$ is the change in effective angle of attack at the center of the airfoil, and the terms in $\frac{\delta q_y}{U}$ are those which would appear if the angle of attack of the airfoil in a rectilinear flow were increased by $\Delta\alpha=\frac{\delta q_y}{U}$. They may be thought of as the terms due to the y component of velocity, and may therefore be written $\Delta_y C_L$, $\Delta_y C_M$. The term containing $\frac{\mathrm{d}}{\mathrm{d}_x}\left(\frac{\delta q_y}{U}\right)$ occurs because of the fact that the superimposed flow is such that the streamlines at the airfoil have a curvature symmetrical about the airfoil center. The streamline curvature has the same effect as would an additional camber of equal and opposite curvature on the airfoil in a rectilinear flow. Since this curvature is symmetrical about the airfoil center it furnishes no contribution to the moment. The term in the lift may be thought of as the "curvature term" and written $\Delta_c C_L$. The other two terms arise from the fact that the superimposed streamlines have also an S-shaped or double curvature, and the effect is the same as if the airfoil in a rectilinear flow were given an S-shaped camber of equal and opposite amount. These terms may conveniently be described as the "double-curvature" terms and written $\Delta_d C_L$, $\Delta_d C_M$. All of the above physical explanations may very readily be verified.

It has already been mentioned in Section II that the ordinary expressions for C_L and C_M can be brought into satisfactory agreement with experiment by multiplying both the angle of attack and camber terms by an efficiency factor η. Hence to bring (27) into agreement with reality the same procedure should be followed, i. e. all the terms due to effective angle of attack or effective camber should be multiplied by η.

In view of these remarks the following convenient method of summarizing the results of this section has been adopted:

$$
(28)\left\{
\begin{aligned}
&C_L = C_{L_0} + \Delta C_L \qquad C_M = C_{M_0} + \Delta C_M \\
&\Delta C_L = \Delta_x C_L + \Delta_y C_L + \Delta_c C_L + \Delta_d C_L \\
&\Delta C_M = \Delta_x C_M + \Delta_y C_M \qquad + \Delta_d C_M \\
&\Delta_x C_L = 2\frac{\delta q_x}{U} C_{L_0} \qquad \Delta_x C_M = 2\frac{\delta q_x}{U} C_{M_0} = \frac{C_{M_0}}{C_{L_0}} \Delta_x C_L \\
&\Delta_y C_L = 2\pi\eta \frac{\delta q_y}{U} \qquad \Delta_y C_M = \frac{\pi}{2}\eta \frac{\delta q_y}{U} = \frac{1}{4}\Delta_y C_L \\
&\Delta_c C_L = \frac{\pi}{2}\eta t \frac{\mathrm{d}}{\mathrm{d}x}\left(\frac{\delta q_y}{U}\right) \\
&\Delta_d C_L = \frac{\pi}{8}\eta t^2 \frac{\mathrm{d}^2}{\mathrm{d}x^2}\left(\frac{\delta q_y}{U}\right) \quad \Delta_d C_M = \frac{\pi}{64}\eta t^2 \frac{\mathrm{d}^2}{\mathrm{d}x^2}\left(\frac{\delta q_y}{U}\right) \\
&\qquad\qquad = \frac{1}{8}\Delta_d C_L
\end{aligned}
\right.
$$

where:

C_{L_0}, C_{M_0} are the coefficients of an airfoil in an undisturbed rectilinear flow with velocity U in the direction of the positive x axis;

C_L, C_M are the coefficients of the same airfoil in the same flow but with the velocities δq_x, δq_y superimposed;

δq_x, δq_y are the values of the additional superimposed velocities at the center of the airfoil chord, except when δq_x, δq_y occur in derivatives, in which case the values of the derivatives are to be taken at the center of the airfoil;

t is the airfoil chord; and

η is the efficiency factor which is most conveniently determined from the fact that $2\pi\eta$ is the slope (in radians) of the curve of C_L vs. angle of attack for the airfoil at infinite aspect ratio.

IV. THE SUPERIMPOSED VELOCITIES FOR A 2-DIMENSIONAL BIPLANE

In this section we shall not develop the complete theory of the 2-dimensional biplane, since the results are not of any considerable practical interest, but shall restrict ourselves to the determination of the disturbing velocities at an airfoil caused by the presence, in an otherwise rectilinear flow, of a second airfoil. The results so obtained will then be extended to the case of the 3-dimensional biplane in the next section. Since the results of this section are intended to be used for the biplane problem, an approximation method of finding the disturbing velocities is adopted, in which the disturbing velocities due to an airfoil are determined at a point whose distance from the airfoil center is of the order of magnitude of the airfoil chord or larger.

In finding the velocities induced by an airfoil at a point some distance away the simplest and most naïve method consists in replacing the airfoil by a vortex filament or lifting line fixed at a definite position along the airfoil chord. This method, which has been widely used, gives the variation in induced velocity with variation in the lift coefficient of the airfoil as the angle of attack is changed. However, the effect of the variation in the moment coefficient or center of pressure does not appear. In order to take account of this factor Prandtl, among others, has employed the device of taking the vortex filament at the center of pressure of the airfoil. Then, as the angle of attack of the airfoil is varied, both the strength and position of the equivalent vortex filament change to correspond with the change in the lift and moment coefficients of the airfoil. This simple method suffers from the defect that, in finding the induced velocity at a point fixed with reference to the airfoil, the geometrical arrangement determined by the point, the vortex filament, and the undisturbed velocity U, changes with the angle of attack.

Karman's method, which is here followed, takes into account variations both in C_L and also in C_M, but

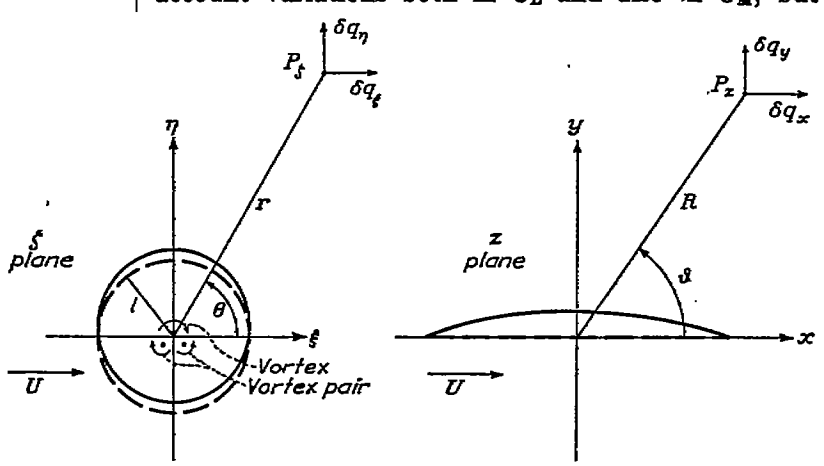

FIGURE 4

NOTE.—The vortex and vortex pair are actually superimposed.

without requiring any change in the geometrical arrangement as these quantities vary. It consists essentially in replacing the airfoil by a vortex filament and a vortex pair or doublet, both of which change in strength but not in position with variations in the airfoil C_L and C_M. The position of both the vortex and the vortex pair is taken to be at the center of the airfoil chord. The following analysis, which justifies this picture and puts the results in simple analytical form, uses the methods of the complex potential function and of the elementary Cauchy theory of the complex variable, which are amply described in Chapters V to VII of Reference 1.

Let w represent a complex potential function such that for the z and ζ planes of Figures 1, 4

$$q_x - iq_y = \frac{\mathrm{d}w}{\mathrm{d}z}$$

$$q_\xi - iq_\eta = \frac{\mathrm{d}w}{\mathrm{d}\zeta}$$

where ζ and z are connected by the original conformal transformation (1). Consider initially a uniform, rectilinear flow about the straight line airfoil in the z plane given by

$$w_0(z) = Uz$$
$$\therefore q_x = U \quad ; \quad q_y = 0$$

This corresponds to the flow about the unit circle in the ζ plane:

$$w_0(\zeta) = U\left(\zeta + \frac{1}{\zeta}\right) \tag{29}$$

As the straight line is deformed into a curved airfoil as in Figure 4 the velocity at a point P_z is altered. We must determine the additional or induced velocities at P_z which may be denoted by δq_x, δq_y. In carrying out the analysis we require the airfoil to have its leading edge at $x=-2$ and its trailing edge at $x=+2$, but exactly as in Section II the final results will be valid even when the restrictions on the leading edge are removed. As before the analysis is largely carried out in the ζ plane, i. e., we must find at the point P_ζ, corresponding to P_z, the additional velocities introduced by the deformation of the unit circle into the pseudocircle.

Let w_1 be the potential function corresponding to these additional velocities. Then since the additional velocities must vanish at infinity we may write in general.

$$w_1(\zeta) = U\left(A_0 \log \zeta + \frac{A_1}{\zeta} + \frac{A_2}{\zeta^2} + \cdots + \frac{A_j}{\zeta^j} + \cdots\right)$$

where the A_j's are complex coefficients of the form

$$A_j = a_j + ib_j$$

and a_j and b_j are real quantities.

With the scale we have chosen the coefficients A_1, A_2, etc., must have absolute values of the order of 1 or less since, except for the circulation given by A_0, conditions even fairly close to the circle are not violently altered by the deformation of the circle into the pseudocircle. We are interested in conditions at P_z where R is of the order of the airfoil chord $=4$. Hence in the ζ plane r is of the order of 4 and the magnitude of the successive terms in $\frac{w_1(\zeta)}{U}$ is at most

$$A_0 \log 4, \frac{1}{4}, \frac{1}{16}, \cdots \frac{1}{4^j}, \cdots \text{ etc.}$$

Since $w_1(\zeta)$ is itself a small correction factor to be added to $w_0(\zeta)$ at P_ζ it is apparent that to any degree of practically interesting accuracy terms in $w_1(\zeta)$ of higher degree than $\frac{1}{\zeta}$ may be neglected. Hence we write

$$w_1(\zeta) = U\left(A_0 \log \zeta + \frac{A_1}{\zeta}\right)$$

These terms have definite physical significances as follows:

$$w = UA_0 \log \zeta = U(a_0 + ib_0) \log \zeta$$

represents a flow due to a source at the origin (a_0) plus that due to a vortex at the origin (b_0). Since we must not introduce any net sources or sinks if the pseudocircle is to be a closed curve, we must take $a_0=0$. Similarly

$$w = \frac{A_1}{\zeta} = \frac{a_1 + ib_1}{\zeta}$$

represents the flow due to a vortex pair at the origin with axis perpendicular to U (a_1) plus that due to a vortex pair at the origin with axis parallel to U (b_1). The first gives an increase in size of the pseudocircle symmetrical about the x axis, and corresponds essentially to an increase in thickness of the airfoil symmetrical about the mean camber line. As already mentioned, Jeffreys has shown that even near to the airfoil the effect of such a thickening is small, hence this effect may be entirely neglected for our purposes, and we may take $A_1 = ib_1$. Hence

$$w_1(\zeta) = iU\left(b_0 \log \zeta + \frac{b_1}{\zeta}\right) \tag{30}$$

where the first term corresponds to a vortex at the origin and the second to a vortex pair at the origin with axis parallel to U.

The velocities in the ζ plane corresponding to this flow are given by

$$\frac{\delta q_\xi}{U} - i\frac{\delta q_\eta}{U} = \frac{1}{U}\frac{dw_1}{d\zeta} = i\left\{\frac{b_0}{r}e^{-i\theta} - \frac{b_1}{r^2}e^{-2i\theta}\right\},$$

and in the z plane, from the first equation of Section II,

$$\frac{\delta q_x}{U} - i\frac{\delta q_y}{U} = \left(\frac{\delta q_\xi}{U} - i\frac{\delta q_\eta}{U}\right)\frac{1}{1-1/\zeta^2}$$

Since ζ is of order of magnitude 4 at P_ζ, $1/\zeta^2$ is of order of magnitude $1/16$ and we have already neglected terms of this order relative to 1. Hence we may take

$$\frac{\delta q_x}{U} - i\frac{\delta q_y}{U} = \frac{\delta q_\xi}{U} - i\frac{\delta q_\eta}{U} = i\left\{\frac{b_0}{r}(\cos\theta - i\sin\theta) - \frac{b_1}{r^2}(\cos 2\theta - i\sin 2\theta)\right\}$$

or

$$\frac{\delta q_x}{U} = b_0\frac{\sin\theta}{r} - b_1\frac{\sin 2\theta}{r^2}$$

$$\frac{\delta q_y}{U} = -b_0\frac{\cos\theta}{r} + b_1\frac{\cos 2\theta}{r^2}$$

In order to express the velocities in terms of the z plane coordinates we make another approximation which introduces errors of the same order as those already introduced; i. e., we take $r=R$ and $\theta=\vartheta$ where

R, ϑ are polar coordinates of the point P_z. Hence finally

$$(31)\qquad \begin{cases} \dfrac{\delta q_x}{U}=b_0\dfrac{\sin\vartheta}{R}-b_1\dfrac{\sin 2\vartheta}{R^2} \\ \dfrac{\delta q_y}{U}=-b_0\dfrac{\cos\vartheta}{R}+b_1\dfrac{\cos 2\vartheta}{R^2} \end{cases}$$

We must now find more useful expressions for the constants b_0, b_1, and shall use the well-known relations of Blasius for this purpose. With our conventions Blasius's equations for the lift and moment acting on a body in a flow defined by the potential function w are

$$L=-\frac{\rho}{2}\Re\int_c\left(\frac{dw}{dz}\right)^2 dz$$

$$M=\frac{\rho}{2}\Re\int_c\left(\frac{dw}{dz}\right)^2 z\,dz$$

where the integrals are contour integrals about any closed curve c surrounding the body, and $\Re$ means "real part of." Transforming to the ζ plane

$$L=-\frac{\rho}{2}\Re\int_{c'}\frac{\left(\frac{dw}{d\zeta}\right)^2}{\frac{dz}{d\zeta}}d\zeta$$

$$M=\frac{\rho}{2}\Re\int_c\frac{\left(\frac{dw}{d\zeta}\right)^2}{\frac{dz}{d\zeta}}\left(\zeta+\frac{1}{\zeta}\right)d\zeta$$

where c' is the closed curve in the ζ plane corresponding to c in the z plane. Writing

$$\frac{\left(\frac{dw}{d\zeta}\right)^2}{\frac{dz}{d\zeta}}=c_0+\frac{c_1}{\zeta}+\frac{c_2}{\zeta_2}+\cdots\cdots$$

$$L=-\frac{\rho}{2}\Re\int_{c'}\left(c_0+\frac{c_1}{\zeta}+\frac{c_2}{\zeta_2}+\cdots\right)d\zeta$$

$$M=\frac{\rho}{2}\Re\int_{c'}\left(c_0\zeta+c_1+\frac{c_0+c_2}{\zeta}+\frac{c_1+c_3}{\zeta^2}+\cdots\cdots\right)d\zeta$$

and by Cauchy's theorem on contour integrals

$$L=-\frac{\rho}{2}\Re\,(2\pi i c_1)=\pi\rho\Im\,(c_1)$$

$$M=\frac{\rho}{2}\Re\,(2\pi i\,[c_0+c_2])=-\pi\rho\Im\,(c_0+c_2)$$

Where $\Im$ signifies "imaginary part of."

Applying these results to the problem in hand, we have from (29), (30)

$$w(\zeta)=w_0(\zeta)+w_1(\zeta)=U\left(\zeta+ib_0\log\zeta+\frac{1+ib_1}{\zeta}\right)$$

$$\therefore\ \frac{\left(\frac{dw}{d\zeta}\right)^2}{\frac{dz}{d\zeta}}=U_2\left(1+\frac{2ib_0}{\zeta}-\frac{2+2ib_1+b_0^2}{\zeta^2}+\cdots\cdots\right)\left(1+\frac{1}{\zeta^2}+\cdots\cdots\right)=U^2\left(1+\frac{2ib_0}{\zeta}-\frac{1+b_0^2+2ib_1}{\zeta^2}+\cdots\cdots\right)$$

$$\therefore\ c_1=2ib_0U^2$$

$$c_0+c_2=-(b_0^2+2ib_1)\,U^2$$

$$\therefore\ L=2\pi\rho U^2b_0$$

$$M=2\pi\rho U^2b_1$$

Hence for an airfoil of chord t

$$b_0=\frac{C_L}{4\pi}t,\quad b_1=\frac{C_M}{4\pi}t^2;$$

and substituting these expressions into (31)

$$(32)\qquad \begin{aligned} \frac{\delta q_x}{U}&=\frac{C_L}{4\pi}\frac{t}{R}\sin\vartheta-\frac{C_M}{4\pi}\left(\frac{t}{R}\right)^2\sin 2\vartheta \\ \frac{\delta q_y}{U}&=-\frac{C_L}{4\pi}\frac{t}{R}\cos\vartheta+\frac{C_M}{4\pi}\left(\frac{t}{R}\right)^2\cos 2\vartheta \end{aligned}$$

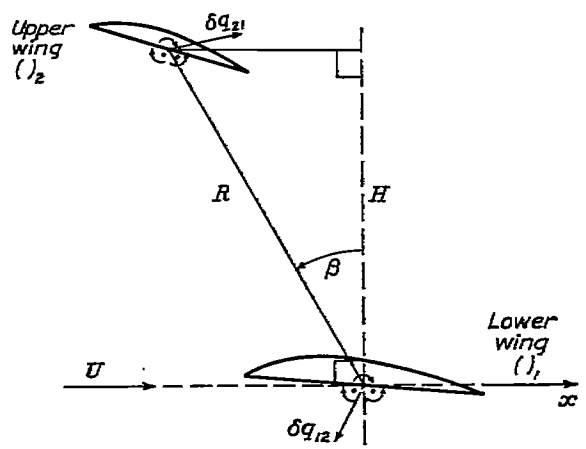

FIGURE 5

It can easily be verified that these are just the velocities which would be induced by a vortex at the center of the airfoil whose strength was proportional to C_L, and a vortex pair at the same point with axis parallel to U and whose strength was proportional to C_M. The procedure in this verification is exactly analogous to the above except that it is conducted entirely in the z plane. The vortex and vortex pair which serve to replace the airfoil are indicated in Figure 5.

By introducing the following notation (32) can be rewritten in a form more suitable for use in connection with the biplane problem. We shall hereafter use a subscript $_2$ to denote the upper wing and $_1$ to denote the lower wing of a biplane. It will often be necessary to use double subscripts, in which case the first subscript determines the position at which a quantity is measured and the second indicates the cause giving rise to the quantity.

For example, if Q is any such quantity, then Q_{21} is the value of the quantity at the upper wing which is produced by the presence of the lower wing. Unless otherwise specified, all such quantities are measured at the mid-point of the chord of the wing in question. It will be convenient to introduce the "aerodynamic stagger," β, and the "aerodynamic gap," H, as indicated in Figure 5. β is defined as the angle between the perpendicular to U and the line joining the mid-points of the two chords, and is taken as positive when the upper wing is ahead of the lower. H is the distance between the projections of the two mid-points on a line perpendicular to U. Since the x axis has been taken parallel to U the relation between β and ϑ is $\beta=\vartheta-\frac{\pi}{2}$ when the effect of the lower wing on the upper is considered, $\beta=\vartheta-\frac{3\pi}{2}$ when the effect of the upper wing on the lower is considered, and that between H and R is

$$H=R\cos\beta.$$

With these conventions equations (32) become

$$(33)\left\{\begin{aligned}
{}_{\infty}\left(\frac{\delta q_x}{U}\right)_{21}&=\frac{C_{L_1}}{4\pi}\frac{t_1}{H}\cos^4\beta+\frac{C_{M_1}}{4\pi}\left(\frac{t_1}{H}\right)^2\cos^2\beta\sin 2\beta\\
{}_{\infty}\left(\frac{\delta q_y}{U}\right)_{21}&=\frac{C_{L_1}}{4\pi}\frac{t_1}{H}\sin\beta\cos\beta-\frac{C_{M_1}}{4\pi}\left(\frac{t_1}{H}\right)^2\cos^2\beta\cos 2\beta\\
{}_{\infty}\left(\frac{\delta q_x}{U}\right)_{12}&=-\frac{C_{L_2}}{4\pi}\frac{t_2}{H}\cos^2\beta+\frac{C_{M_2}}{4\pi}\left(\frac{t_2}{H}\right)^2\cos^2\beta\sin 2\beta\\
{}_{\infty}\left(\frac{\delta q_y}{U}\right)_{12}&=-\frac{C_{L_2}}{4\pi}\frac{t_2}{H}\sin\beta\cos\beta\\
&\quad-\frac{C_{M_2}}{4\pi}\left(\frac{t_2}{H}\right)^2\cos^2\beta\cos 2\beta
\end{aligned}\right.$$

where the pre-subscript ∞ has been introduced to indicate that the results are for a 2-dimensional biplane; i. e., one with infinite spans. It should be noticed that the second group of equations relating to conditions at the lower wing can be obtained from the first or upper wing group by interchanging the subscripts 1 and 2 and replacing β by $\beta+\pi$ and H by $-H$. This is a general result and permits us in the future to determine all effects at the upper wing alone, obtaining the corresponding effects at the lower wing from the final upper wing expressions by using these simple changes.

V. THE 3-DIMENSIONAL BIPLANE

In this section the results of the previous sections are extended so as to give the lift and moment coefficients of the individual wings of a biplane in terms of the assumed coefficients of the same wings when acting as monoplanes in an undisturbed flow. The parameters which enter in addition to the monoplane characteristics are the two spans, the two geometrical aspect ratios, the geometrical gap and stagger, the decalage, and the geometrical angle of attack of the biplane cellule. The effects of sweepback and dihedral are not considered, but the latter at least should have little effect and can easily be handled by considering an equivalent biplane with no dihedral and with a gap equal to the mean gap of the actual biplane. In view of the complexity of the problem, it is unavoidable that the notation should become somewhat cumbersome, so that the various symbols and conventions employed are introduced in the body of the text as they become necessary, and the final notation is then summarized at the end of the paper.

As far as the author is aware the present problem has been considered in a general manner only twice—by Betz (Reference 5) and by Eck (Reference 6)—although certain elements have been discussed by Prandtl, Glauert, Munk, and others. Betz uses the simple "lifting line" method as described in Section IV and the results of his theory are known to be seriously in disagreement with experiment. Eck does not give any results for biplanes of unequal spans, and his analysis appears to neglect one factor which may be of some importance.[3] Hence there seems to be some justification for a new consideration of the problem, especially in view of the considerable practical interest which it holds. In the following induced drag is not discussed, since Prandtl's classical multiplane theory (Reference 7) gives the total induced drag of a biplane very satisfactorily. However, in the latter theory the distribution of lift between the two wings is assumed as known, so that from this point of view as well as from that of structural design a determination of the relative lifts of the two wings of a biplane is of considerable importance.

We reduce the 3-dimensional problem to an essentially 2-dimensional one in the normal manner, using the strip or wing element hypothesis in which the flow around each element of the wing along the span is assumed to be such that the relations of the 2-dimensional airfoil theory hold. We further assume that the lift and moment are uniformly distributed along the span of each wing whenever mutual interference effects

[3] In calculating the induced velocity at one wing due to the trailing vortices of the other, Eck uses Pohlhausen's results, which are valid only for the case in which both wings are in the same transverse plane. Hence Eck neglects the effect of stagger on this portion of the downwash.

are under consideration. Pressure distribution experiments indicate that this assumption is not a bad one even in the case of biplanes with a fair amount of taper. It should introduce only minor errors when applied to such interference effects, although it is entirely unsuitable for a treatment of the monoplane problem. For simplicity in the carrying out of the analysis both wings are considered as having rectangular plan forms, although the results are expressed in terms of span and aspect ratio so that they may be extended to other cases. The above assumptions imply that, whenever mutual interference effects are considered, the lift and moment coefficients for all elements of a particular wing are the same and are equal to the coefficients for the complete wing. The actual disturbing velocities strength and extending from wing tip to wing tip along the center of the chord. However, for the finite wing the two trailing vortices implied by the assumption of uniform lift distribution must also be considered. They are assumed to extend from the wing tips downstream to infinity and to have their axes parallel to the velocity U. In order to fix ideas we shall consider the disturbing velocities caused by the lower wing at the upper wing. Then the lower wing must be replaced by a horseshoe vortex of breadth b_1 and a vortex pair of the same length, as indicated in Figure 6, where b denotes span. The velocity induced by this system at a point P of the upper wing is to be found, and then the mean value of this velocity over the upper wing is to be obtained by integrating over b_2.

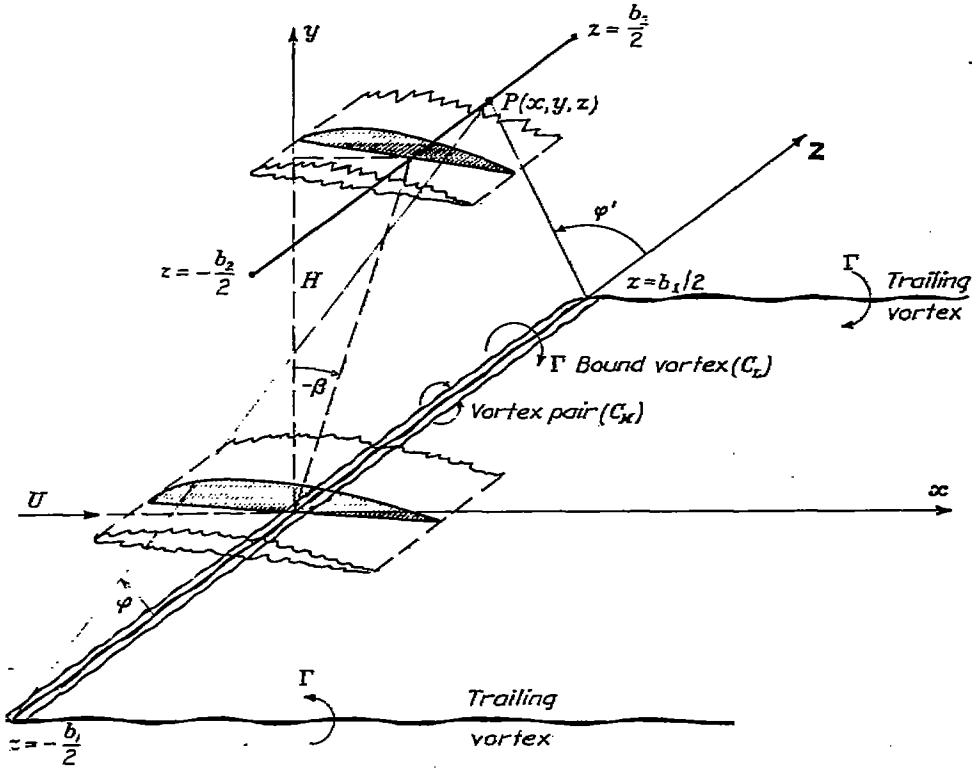

FIGURE 6

at one wing due to the other vary along the span. Hence, in accordance with the above assumptions, they must be replaced by equivalent constant velocities obtained by taking mean values across the span. When these mean values have been determined they are to be substituted into equations (28) in place of the corresponding velocities which occur there.

The first step in this procedure is to find the disturbing velocities at one wing caused by the other. In Section IV it was shown that the disturbing velocities due to an infinitely long wing could be calculated by replacing the wing by a vortex and vortex pair extending along the center of the wing chord. Hence a finite wing with constant C_L, C_M, and chord is to be replaced by a vortex and vortex pair, each of uniform

If, as in Section IV, we write ${}_\infty q$ = the velocity induced at a point P by an infinitely long rectilinear vortex of strength Γ, then ${}_\infty q$ is the velocity which would be induced at P by the vortex Γ in a 2-dimensional flow. If q = the velocity at P due to a finite length of the vortex Γ, then the well-known law of Biot-Savart may be written so as to give the following purely geometrical relation between q and ${}_\infty q$:

$$q={}_\infty q\,\frac{\cos\varphi-\cos\varphi'}{2},$$

where φ and φ' are the angles between the vortex line and the lines joining the ends of the vortex segment to P. The angles φ and φ' for the bound vortex of the lower wing are indicated in Figure 6. Choosing

the coordinate system indicated in the figure with the origin at the center of the lower wing, x axis parallel to U, y axis perpendicular to U, z axis along the span, and letting r, θ, z be cylindrical coordinates of P, then

$$q=q_\theta \qquad q_r=0 \qquad q_z=0$$
$$_\infty q={}_\infty q_\theta \qquad {}_\infty q_r=0 \qquad {}_\infty q_z=0$$

Hence the expression given above determines the relation between any component of q and the corresponding component of $_\infty q$, since q and $_\infty q$ are parallel. It might be expected that the same geometrical relation would also hold between the components of velocity induced by a finite, rectilinear, uniform vortex pair and those induced by the same vortex pair extended to infinity in both directions. An investigation of this point indicates that for a vortex pair the Biot-Savart geometrical relation does hold between q_r and $_\infty q_r$, while the relation between q_θ and $_\infty q_\theta$ is somewhat different. The actual equation connecting q_θ and $_\infty q_\theta$, which is too complicated to be conveniently used here, does not differ greatly from the Biot-Savart relation for cases of interest in the present problem. This is particularly true when mean values over the spans are taken. Also it must be remembered that the total effect due to a vortex pair is fairly small compared with that due to the corresponding vortex in most cases here considered. Hence it appears that for the purposes of this analysis it is satisfactory to assume that the Biot-Savart geometrical relation holds between the corresponding components of q and $_\infty q$ whether the velocities are induced by a vortex or by a vortex pair.

(a) Effect of the Bound Vortex and Vortex Pair.

In view of the preceding remarks and since we have assumed both C_L and C_M constant across the span, we can discuss together the induced velocity at P caused by the bound vortex and by the vortex pair. We have, therefor, for the induced velocity at P arising from both of these causes

$$\left(\frac{\delta q_x}{U}\right)_p={}_\infty\left(\frac{\delta q_x}{U}\right)_{21}\frac{\cos\varphi-\cos\varphi'}{2}$$
$$\left(\frac{\delta q_y}{U}\right)_p={}_\infty\left(\frac{\delta q_y}{U}\right)_{21}\frac{\cos\varphi-\cos\varphi'}{2},$$

where $_\infty\left(\frac{\delta q_x}{U}\right)_{21}$ and $_\infty\left(\frac{\delta q_y}{U}\right)_{21}$ are the appropriate expressions of (33) as deduced for the two-dimensional biplane (infinite span). We must now find the mean values of these quantities over the upper span and shall use a bar to denote such mean values. Then

$$\overline{\left(\frac{\delta q_x}{U}\right)_{21}}=\frac{1}{b_2}\int_{-\frac{b_2}{2}}^{\frac{b_2}{2}}\left(\frac{\delta q_x}{U}\right)_p dz,$$

and similarly for $\overline{\left(\frac{\delta q_y}{U}\right)_{21}}$. But $_\infty\left(\frac{\delta q_x}{U}\right)$ and $_\infty\left(\frac{\delta q_y}{U}\right)$ are both constant with respect to z, whence

$$\overline{\left(\frac{\delta q_x}{U}\right)_{21}}={}_\infty\left(\frac{\delta q_x}{U}\right)_{21}\cdot\frac{1}{2b_2}\int_{-b_1/2}^{b_1/2}(\cos\varphi-\cos\varphi')\,dx$$

$$\overline{\left(\frac{\delta q_y}{U}\right)_{21}}={}_\infty\left(\frac{\delta q_y}{U}\right)_{21}\cdot\frac{1}{2b_2}\int_{-b_1/2}^{b_1/2}(\cos\varphi-\cos\varphi')\,dx.$$

Defining the aerodynamic stagger β and gap H exactly as in the previous section, we have for the point P (x, y, z)

$$\cos\varphi=\frac{z+b_1/2}{\sqrt{(z+b_1/2)^2+H^2+x^2}},\quad \cos\varphi'=\frac{z-b_1/2}{\sqrt{(z-b_1/2)+H^2+x^2}}$$

A little calculation now gives, since $\cos^2\beta=\frac{H^2}{H^2+x^2}$

$$\frac{1}{2b_2}\int_{-\frac{b_2}{2}}^{\frac{b_2}{2}}(\cos\varphi-\cos\varphi')dz=\frac{H}{b_2\cos\beta}\left[\sqrt{1+\left(\frac{b_1+b_2}{2H}\cos\beta\right)^2}-\sqrt{1+\left(\frac{b_1-b_2}{2H}\cos\beta\right)^2}\right].$$

It is convenient to introduce the following parameters:

$$(34)\qquad \begin{cases}\mu=\dfrac{b_1+b_2}{2H}\cos\beta & r=\sqrt{1+\mu^2}\\[2ex] \mu'=\dfrac{b_1-b_2}{2H}\cos\beta & r'=\sqrt{1+\mu'^2}\end{cases}$$

in terms of which we have

$$\frac{1}{2b_2}\int_{-\frac{b_2}{2}}^{\frac{b_2}{2}}(\cos\varphi-\cos\varphi')\,dz=\frac{r-r'}{\mu-\mu'}$$

Hence

$$\overline{\left(\frac{\delta q_x}{U}\right)_{21}}={}_\infty\left(\frac{\delta q_x}{U}\right)_{21}\cdot\frac{r-r'}{\mu-\mu'},$$
$$\overline{\left(\frac{\delta q_y}{U}\right)_{21}}={}_\infty\left(\frac{\delta q_y}{U}\right)_{21}\cdot\frac{r-r'}{\mu-\mu'}$$

Now introducing the expressions given in (33) for

$$_\infty\left(\frac{\delta q_x}{U}\right)_{21}\text{ and }{}_\infty\left(\frac{\delta q_y}{U}\right)_{21},$$

$$\overline{\left(\frac{\delta q_x}{U}\right)_{21}}=\left[\frac{C_{L_1}}{4\pi}\frac{t_1}{H}\cos^2\beta+\frac{C_{M_1}}{4\pi}\left(\frac{t_1}{H}\right)^2\cos^2\beta\sin 2\beta\right]\frac{r-r'}{\mu-\mu'}$$

$$\overline{\left(\frac{\delta q_y}{U}\right)_{21}}=\left[\frac{C_{L_1}}{4\pi}\frac{t_1}{H}\cos\beta\sin\beta-\frac{C_{M_1}}{4\pi}\left(\frac{t_1}{H}\right)^2\times\cos^2\beta\cos 2\beta\right]\frac{r-r'}{\mu-\mu'}$$

Since we are considering rectangular wings the two aspect ratios are defined as follows:

$$A_1=\frac{b_1}{t_1},\ A_2=\frac{b_2}{t_2}$$

Then the above equations may be written in the form

$$(35)\quad \begin{cases} \overline{\left(\frac{\delta q_x}{U}\right)}_{21} = \frac{1}{4\pi A_1}\frac{b_1}{b_2}\left[C_{L_1}(r-r')\cos\beta + \frac{C_{M_1}}{A_1}\times (\mu+\mu')(r-r')\sin 2\beta\right] \\ \overline{\left(\frac{\delta q_y}{U}\right)}_{21} = \frac{1}{4\pi A_1}\frac{b_1}{b_2}\left[C_{L_1}(r-r')\sin\beta - \frac{C_{M_1}}{A_1}\times (\mu+\mu')(r-r')\cos 2\beta\right] \end{cases}$$

These expressions give the mean velocity at the upper wing induced by the bound vortex and vortex pair associated with the lower wing.

(b) Effect of the Trailing Vortices.

In accordance with our simplifying assumption which consists in replacing a wing by a horseshoe vortex and by a vortex pair, we have now to consider the mean velocities induced at the upper wing by the two vortices trailing downstream from the lower wing tips. These vortices afford no contribution to δq_x, so that all that must be calculated is their effect on $\frac{\delta q_y}{U}$. Let us consider first the effect of the vortex extending from the right wing tip, $z=b_1/2$, to infinity. The Biot-Savart Law gives for the resultant induced velocity at P

$$q = {}_\infty q\,\frac{1+\cos\varphi}{2}$$

where φ is the angle between the direction of the x axis and the line joining the wing tip to P. ${}_\infty q$ is given by

$${}_\infty q = \frac{\Gamma_1}{2\pi}\frac{1}{\sqrt{H^2+\left(\frac{b_1}{2}-z\right)^2}}$$

where Γ_1 is the circulation around the lower wing. Hence

$$q = \frac{\Gamma_1}{4\pi\sqrt{H^2+\left(\frac{b_1}{2}-z\right)^2}}\left[1+\frac{x}{\sqrt{H^2+x^2+\left(\frac{b_1}{2}-z\right)^2}}\right]$$

This velocity is perpendicular to the plane containing P and the vortex so that the component parallel to the y axis is

$$q_y = -q\,\frac{\frac{b_1}{2}-z}{\sqrt{H^2+\left(\frac{b_1}{2}-z\right)^2}}$$

The relation between Γ_1 and the lift coefficient is given by

$$L_1 = C_{L_1}\frac{\rho}{2}U^2 t_1 b_1 = \rho\,(U+\delta q_x)\,\Gamma_1 b_1$$

but δq_x is small compared with U and its inclusion gives only second order terms in the final result, so that we may write with sufficient accuracy

$$\Gamma_1 = \frac{C_{L_1}t_1 U}{2}$$

Hence

$$q_y = -\frac{C_{L_1}t_1 U}{8\pi}\,\frac{\frac{b_1}{2}-z}{H^2+\left(\frac{b_1}{2}-z\right)^2}\left[1+\frac{x}{\sqrt{H^2+x^2+\left(\frac{b_1}{2}-z\right)^2}}\right]$$

The other trailing vortex will give a corresponding term in which z is replaced by $-z$. Hence for the resultant vertical velocity induced at P by the trailing vortices:

$$\left(\frac{\delta q_y}{U}\right)_P = -\frac{C_{L_1}t_1}{8\pi}\left[\frac{\frac{b_1}{2}-z}{H^2+\left(\frac{b_1}{2}-z\right)^2}\left\{1+\frac{x}{\sqrt{H^2+x^2+\left(\frac{b_1}{2}-z\right)^2}}\right\} + \frac{\frac{b_1}{2}+z}{H^2+\left(\frac{b_1}{2}+z\right)^2}\left\{1+\frac{x}{\sqrt{H^2+x^2+\left(\frac{b_1}{2}+z\right)^2}}\right\}\right]$$

As before this expression must be integrated over b_2 in order to obtain its mean value. The integration gives directly

$$\overline{\left(\frac{\delta q_y}{U}\right)}_{21} = -\frac{C_{L_1}t_1}{8\pi b_2}\left[\log\frac{H^2+\left(\frac{b_1+b_2}{2}\right)^2}{H^2+\left(\frac{b_1-b_2}{2}\right)^2} + \log\frac{\sqrt{H^2+x^2+\left(\frac{b_1+b_2}{2}\right)^2}-x}{\sqrt{H^2+x^2+\left(\frac{b_1+b_2}{2}\right)^2}+x}\cdot\frac{\sqrt{H^2+x^2+\left(\frac{b_1-b_2}{2}\right)^2}+x}{\sqrt{H^2+x^2+\left(\frac{b_1-b_2}{2}\right)^2}-x}\right]$$

By introducing the parameters defined above and performing a little reduction this leads to the simple expression

$$(36)\quad \overline{\left(\frac{\delta q_y}{U}\right)}_{21} = -\frac{C_{L_1}}{4\pi A_1}\frac{b_1}{b_2}\log\frac{r+\sin\beta}{r'+\sin\beta}$$

giving the mean velocity at the upper wing induced by the trailing vortices of the lower wing.

(c) Complete Mutually Induced Velocities.

Combining (35) and (36) we get for the mean value over the upper wing of the total velocity induced by the lower wing:

$$\overline{\left(\frac{\delta q_x}{U}\right)}_{21} = \frac{1}{4\pi A_1}\frac{b_1}{b_2}\left[C_{L_1}(r-r')\cos\beta + \frac{C_{M_1}}{A_1}(\mu+\mu')(r-r')\sin 2\beta\right]$$

$$\overline{\left(\frac{\delta q_y}{U}\right)}_{21} = \frac{1}{4\pi A_1}\frac{b_1}{b_2}\left[C_{L_1}\left\{(r-r')\sin\beta - \log\frac{r+\sin\beta}{r'+\sin\beta}\right\} - \frac{C_{M_1}}{A_1}(\mu+\mu')(r-r')\cos 2\beta\right]$$

In order to obtain the streamline curvature corresponding to these induced velocities we must find

$$\frac{d}{dx}\overline{\left(\frac{\delta q_y}{U}\right)}_{21} \text{ and } \frac{d^2}{dx^2}\overline{\left(\frac{\delta q_y}{U}\right)}_{21}$$

where the values of the derivatives are taken at the center of the upper wing chord. From the geometry of Figure 6 it appears that

$$\frac{d}{dx}=-\frac{\cos^2\beta}{H}\frac{d}{d\beta}$$

$$\frac{d^2}{dx^2}=\frac{\cos^2\beta}{H^2}\left(\cos^2\beta\frac{d^2}{d\beta^2}-2\sin\beta\cos\beta\frac{d}{d\beta}\right)$$

Remembering that μ, μ', r, r' are functions of β, the desired integrations can be carried out in a perfectly straightforward manner. The resulting expressions are a little lengthy, but the final results can be materially simplified by the introduction of certain auxiliary functions which will now be defined. Consider the coefficient of C_{L_1} in $\overline{\left(\frac{\delta q_y}{U}\right)}_{21}$

$$(r-r')\sin\beta-\log\frac{r+\sin\beta}{r'+\sin\beta}$$

$$=[r\sin\beta-\log(r+\sin\beta)]-[r'\sin\beta-\log(r'+\sin\beta)]$$

$$=2e(\mu,\beta)-2e(\mu',\beta)=2E\text{ (say)}$$

Hence this quantity $2E$, which is a function of μ, μ', β, can be expressed as the difference of two functions of only two variables, the form of the two functions being the same and only the arguments differing. Curves giving e in terms of μ (or μ') and β are given in Figure 12 from which E may readily be calculated. It is found that the results of the differentiations can similarly be expressed in terms of the differences of pairs of functions, the functions in each pair having the same form but having arguments μ, β and μ', β respectively. In this form the results may be summarized as follows:

$$(37)\quad\begin{cases}\overline{\left(\frac{\delta q_x}{U}\right)}_{21}=\frac{1}{4\pi A_1}\frac{b_1}{b_2}\left[C_{L_1}(r-r')\cos\beta+\frac{C_{M_1}}{A_1}(\mu+\mu')(r-r')\sin 2\beta\right]\\ \overline{\left(\frac{\delta q_y}{U}\right)}_{21}=\frac{1}{4\pi A_1}\frac{b_1}{b_2}\left[C_{L_1}\cdot 2E-\frac{C_{M_1}}{A_1}(\mu+\mu')(r-r')\cos 2\beta\right]\\ \frac{d}{dx}\overline{\left(\frac{\delta q_y}{U}\right)}_{21}=\frac{1}{4\pi A_1}\frac{b_1}{b_2}\frac{\cos\beta}{H}\left[C_{L_1}\cdot 8F-\frac{C_{M_1}}{A_1}(\mu+\mu')8F^*\right]\\ \frac{d^2}{dx^2}\overline{\left(\frac{\delta q_y}{U}\right)}_{21}=\frac{1}{4\pi A_1}\frac{b_1}{b_2}\frac{\cos^2\beta}{H^2}\left[-C_{L_1}\cdot 32G+\frac{C_{M_1}}{A_1}(\mu+\mu')32G^*\right]\end{cases}$$

where

$$(38)\quad\begin{cases}E=e(\mu,\beta)-e(\mu',\beta)\\ F=f(\mu,\beta)-f(\mu',\beta)\quad F^*=f^*(\mu,\beta)-f^*(\mu',\beta)\\ G=g(\mu,\beta)-g(\mu',\beta)\quad G^*=g^*(\mu,\beta)-g^*(\mu',\beta)\\ \text{and}\\ e(\mu,\beta)=\frac{1}{2}[r\sin\beta-\log(r+\sin\beta)]\\ f(\mu,\beta)=\frac{1}{8}\left[\frac{1}{r}+\frac{\mu^2}{r}\sin^2\beta-r\cos^2\beta\right]\\ f^*(\mu,\beta)=\frac{\sin\beta}{8}\left[\frac{\mu^2}{r}\cos 2\beta+r(6\cos^2\beta-1)\right]\\ g(\mu,\beta)=\frac{\sin\beta}{32}\left[3r\cos^2\beta+3\frac{\mu^2}{r}\cos 2\beta+\frac{\mu^4}{r^3}\sin^2\beta+\frac{\mu^2}{r^3}-\frac{1}{r}\right]\\ g^*(\mu,\beta)=\frac{1}{32}\left[r(30\cos^4\beta-27\cos^2\beta+2)+\frac{\mu^2}{r}(20\cos^4\beta-24\cos^2\beta+5)-\frac{\mu^4}{r^3}(2\cos^4\beta-3\cos^2\beta+1)\right]\end{cases}$$

Graphs of e, f, f^*, g, g^* have been constructed and are given in Figures 8–12. From these curves E, F, F^*, G, G^* can readily be obtained for any particular case.

(d) **Effects of Mutual Induction.**

The results given in (37) can now be introduced into equations (28) to give the changes in the coefficients of one wing caused by the presence of the other. As a generalization of our former notation we write:

C_{L_1}, C_{L_2}, C_{M_1}, C_{M_2} are the coefficients of the individual wings of the biplane, and

$C_{L_{10}}$, $C_{L_{20}}$, $C_{M_{10}}$, $C_{M_{20}}$ are the coefficients of the individual wings when acting as monoplanes in an undisturbed flow at the same geometrical angle of attack as that which they have in the biplane, when the latter is in the particular attitude under investigation. With this notation (28) becomes

$$\Delta_x C_{L_2}=2\overline{\left(\frac{\delta q_x}{U}\right)}_{21}C_{L_{20}}$$

$$\Delta_d C_{L_2}=\frac{\pi\eta}{8}t_2^2\frac{d^2}{dx^2}\overline{\left(\frac{\delta q_y}{U}\right)}_{21},\text{ etc.}$$

A simplification is achieved by writing

$$C_{M_1}'=\frac{C_{M_1}}{A_1}(\mu+\mu')$$

so that the changes in the upper wing coefficients due to the presence of the lower wing may finally be written:

$$
(39)\quad \begin{cases}
\Delta_x C_{L_2} = C_{L_1} C_{L_{20}} \left(\dfrac{b_1}{b_2} \dfrac{r-r'}{2\pi A_1}\right) \cos\beta \\
\qquad + C_{M_1}' C_{L_{20}} \left(\dfrac{b_1}{b_2} \dfrac{r-r'}{2\pi A_1}\right) \sin 2\beta \\
\Delta_y C_{L_2} = C_{L_1} \left(\dfrac{b_1}{b_2} \dfrac{\eta}{A_1}\right) \cdot E \\
\qquad - C_{M_1}' \left(\dfrac{b_1}{b_2} \dfrac{\eta}{A_1} \dfrac{r-r'}{2}\right) \cos 2\beta \\
\Delta_c C_{L_2} = C_{L_1} \left(\eta \dfrac{\mu+\mu'}{A_1 A_2}\right) \cdot F \\
\qquad - C_{M_1}' \left(\eta \dfrac{\mu+\mu'}{A_1 A_2}\right) F^* \\
\Delta_d C_{L_2} = - C_{L_1} \left(\eta \dfrac{\mu^2-\mu'^2}{A_1 A_2^2}\right) \cdot G \\
\qquad + C_{M_1}' \left(\eta \dfrac{\mu^2-\mu'^2}{A_1 A_2^2}\right) G^* \\
\Delta_x C_{M_2} = \dfrac{C_{M_{20}}}{C_{L_{20}}} \Delta_x C_{L_2} \\
\Delta_y C_{M_2} = \dfrac{1}{4} \Delta_y C_{L_2} \\
\Delta_d C_{M_2} = \dfrac{1}{8} \Delta_d C_{L_2} \\
\qquad \Delta_m C_{L_2} = (\Delta_x + \Delta_y + \Delta_c + \Delta_d)\, C_{L_2} \\
\qquad \Delta_m C_{M_2} = (\Delta_x + \Delta_y + \Delta_d)\, C_{M_2}
\end{cases}
$$

where Δ_m represents the total change due to mutual induction.

In order to obtain the corresponding changes at the lower wing the simple procedure mentioned at the end of Section IV may be followed; i. e., in (39) the subscripts $_1$ and $_2$ are interchanged, H is replaced by $-H$, and β by $\beta+\pi$. From the definitions of (34) it follows that

$$\mu \to \mu,\ \mu' \to -\mu',\ r \to r,\ r' \to r'$$

Similarly from (38)

$$F \to F,\ F^* \to -F^*,\ G \to -G,\ G^* \to G^*$$

E requires a little more care for

$$e\ (\mu, \beta) \to e\ (\mu, -\beta),\ e\ (\mu', \beta) \to e\ (\mu', -\beta)$$

Hence if we define

$$E^* = e\ (\mu, -\beta) - e\ (\mu', -\beta)$$

then

$$E \to E^*.$$

It is convenient to define

$$C_{M_2}' = \frac{C_{M_2}}{A_2} (\mu - \mu')$$

in which case $C_{M_1}' \to C_{M_2}'$.

Making these substitutions the following expressions are an immediate consequence of (39):

$$
(40)\quad \begin{cases}
\Delta_x C_{L_1} = - C_{L_2} C_{L_{10}} \left(\dfrac{b_2}{b_1} \dfrac{r-r'}{2\pi A_2}\right) \cos\beta \\
\qquad + C_{M_2}' C_{L_{10}} \left(\dfrac{b_2}{b_1} \dfrac{r-r'}{2\pi A_2}\right) \sin 2\beta \\
\Delta_y C_{L_1} = C_{L_2} \left(\dfrac{b_2}{b_1} \dfrac{\eta}{A_2}\right) E^* \\
\qquad - C_{M_2}' \left(\dfrac{b_2}{b_1} \dfrac{\eta}{A_2} \dfrac{r-r'}{2}\right) \cos 2\beta \\
\Delta_c C_{L_1} = C_{L_2} \left(\eta \dfrac{\mu-\mu'}{A_2 A_1}\right) F \\
\qquad + C_{M_2}' \left(\eta \dfrac{\mu-\mu'}{A_2 A_1}\right) F^* \\
\Delta_d C_{L_1} = C_{L_2} \left(\eta \dfrac{\mu^2-\mu'^2}{A_2 A_1^2}\right) G \\
\qquad + C_{M_2}' \left(\eta \dfrac{\mu^2-\mu'^2}{A_2 A_1^2}\right) G^* \\
\Delta_x C_{M_1} = \dfrac{C_{M_{10}}}{C_{L_{10}}} \Delta_x C_{L_1} \\
\Delta_y C_{M_1} = \dfrac{1}{4} \Delta_y C_{L_1} \\
\Delta_d C_{M_1} = \dfrac{1}{8} \Delta_d C_{L_1} \\
\qquad \Delta_m C_{L_1} = (\Delta_x + \Delta_y + \Delta_c + \Delta_d)\, C_{L_1} \\
\qquad \Delta_m C_{M_1} = (\Delta_x + \Delta_y + \Delta_d)\, C_{M_1}
\end{cases}
$$

(e) Effect of Self-Induction.

To fix ideas consider first the upper wing. If we write

$$C_{L_2} = C_{L_{20}} + \Delta C_L,\ C_{M_2} = C_{M_{20}} + \Delta C_M$$

then we are trying to find ΔC_L and ΔC_M. In general, C_{L_2} differs from $C_{L_{20}}$ which implies that the downwash at the wing caused by its own trailing vortices is different in the two cases. This change in downwash causes a change in effective angle of attack which may be written as $\delta\alpha_2$, and a corresponding change in lift and moment coefficients:

$$\Delta_s C_{L_2} = 2\pi\eta\delta\alpha_2,\ \Delta_s C_{M_2} = \frac{\pi}{2}\eta\delta\alpha_2 = \frac{1}{4}\Delta_s C_{L_2}$$

The subscript $_s$ indicates that the changes arise because of self-induction rather than from any mutual interference effect of the two wings. The total change is the sum of the changes due to mutual and self-induction, i. e.

$$\Delta C_{L_2} = (\Delta_m + \Delta_s)\, C_{L_2},\ \Delta C_{M_2} = (\Delta_m + \Delta_s)\, C_{M_2}$$

In order to calculate the value of $\delta\alpha_2$ we must introduce a new assumption as to the distribution of lift along

the span, since the uniform distribution employed in calculating mutual effects leads in this case to infinite velocities which are physically inadmissable. Hence, for the present purpose we shall assume an elliptical lift distribution giving a constant value of $\delta\alpha_2$ along the span. This lack of consistency in the hypotheses underlying the present theory is certainly to be deplored from the standpoint of elegance, but it is probably of little importance to the actual results Assuming, then, an elliptical distribution

$$\delta\alpha_2 = -\frac{\Delta C_{L_2}}{\pi A_2}$$

so that

$$\Delta_s C_{L_2} = -\frac{2\eta}{A_2}\Delta C_{L_2} = -\frac{2\eta}{A_2}(\Delta_m C_{L_2} + \Delta_s C_{L_2})$$

or finally

$$(41) \qquad \Delta_s C_{L_2} = \frac{-2\eta/A_2}{1+2\eta/A_2}\Delta_m C_{L_2},\ \Delta_s C_{M_2} = \frac{1}{4}\Delta_s C_{L_2}$$

and similarly

$$(41') \qquad \Delta_s C_{L_1} = \frac{-2\eta/A_1}{1+2\eta/A_1}\Delta_m C_{L_1},\ \Delta_s C_{M_1} = \frac{1}{4}\Delta_s C_{L_1}$$

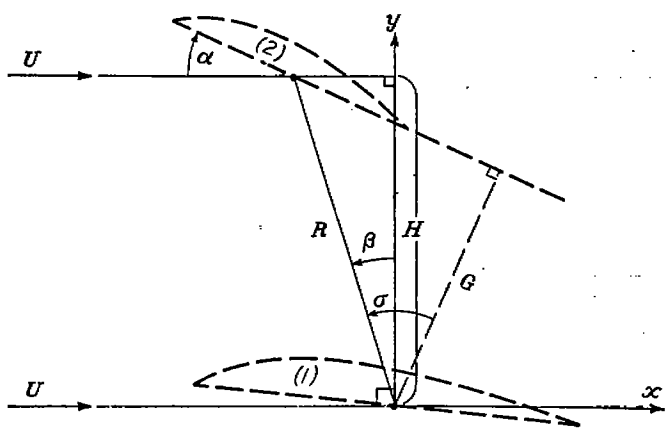

FIGURE 7

(f) Change from Aerodynamic to Geometric Stagger and Gap.

The analysis so far has been entirely in terms of the aerodynamic stagger β and gap H, which, for a given cellule, vary with the geometrical angle of attack α. We now introduce the "geometrical stagger" σ and the "geometrical gap" G which are defined exactly as in Technical Report Number 240 of the N. A. C. A. (Reference 8), except that we take the reference point of each wing at the center of its chord instead of at the leading edge. From Figure 7 it is apparent that

$$R = \frac{H}{\cos\beta} = \frac{G}{\cos\sigma}$$

Hence the parameters defined in (34) may be rewritten as

$$\mu = \frac{b_1+b_2}{2G}\cos\sigma,\ \mu' = \frac{b_1-b_2}{2G}\cos\sigma$$

so that it now appears that they are constant for a given wing cellule and do not vary with the angle of attack. Hence all of the quantities in parentheses in (39) and (40) are geometrical constants whose values for a given biplane are independent of the angle of attack. If we define α as the geometrical angle of attack of the chord line of the upper wing (since this is the reference line in the determination of G and σ), then

$$\beta = \sigma - \alpha$$

and all of the parameters involved in our problem, with the exception of the monoplane airfoil characteristics, are expressed in terms of geometrical constants of the wing cellule and the angle of attack α.

(g) Final Results and Method of Application.

The following form has been adopted as the most convenient method of summarizing the results of this section:

$$(42)\left\{\begin{aligned}
&C_L = C_{L_0} + \Delta C_L \qquad \Delta C_L = \Delta_m C_L + \Delta_s C_L\\
&C_M = C_{M_0} + \Delta C_M \qquad \Delta C_M = \Delta_m C_M + \Delta_s C_M\\
&\Delta_m C_L = \Delta_x C_L + \Delta_y C_L + \Delta_c C_L + \Delta_d C_L\\
&\Delta_m C_M = \Delta_x C_M + \Delta_y C_M + \Delta_d C_M\\
&\text{Note: } C_M \text{ is measured about the center of the airfoil chord.}\\
&\beta = \sigma - \alpha \qquad \mu = \frac{b_1+b_2}{2G}\cos\sigma \qquad r = \sqrt{1+\mu^2}\\
&\qquad\qquad\qquad \mu' = \frac{b_1-b_2}{2G}\cos\sigma \qquad r' = \sqrt{1+\mu'^2}\\
&E = e(\mu,\beta) - e(\mu',\beta) \qquad E^* = e(\mu,-\beta) - e(\mu',-\beta)\\
&F = f(\mu,\beta) - f(\mu',\beta) \qquad F^* = f^*(\mu,\beta) - f^*(\mu',\beta)\\
&G = g(\mu,\beta) - g(\mu',\beta) \qquad G^* = g^*(\mu,\beta) - g^*(\mu',\beta)\\
&\qquad\qquad \textit{Upper wing}\\
&\Delta_x C_{L_2} = C_{L_1} C_{L_{20}}\left(\frac{b_1}{b_2}\frac{r-r'}{2\pi A_1}\right)\cos\beta\\
&\qquad + C_{M_1}' C_{L_{20}}\left(\frac{b_1}{b_2}\frac{r-r'}{2\pi A_1}\right)\sin 2\beta\\
&\Delta_x C_{M_2} = \frac{C_{M_{20}}}{C_{L_{20}}}\Delta_x C_{L_2}\\
&\Delta_y C_{L_2} = C_{L_1}\left(\frac{b_1}{b_2}\frac{\eta}{A_1}\right)E - C_{M_1}'\left(\frac{b_1}{b_2}\frac{\eta}{A_1}\frac{r-r'}{2}\right)\cos 2\beta\\
&\Delta_y C_{M_2} = \frac{1}{4}\Delta_y C_{L_2}\\
&\Delta_c C_{L_2} = C_{L_1}\left(\eta\frac{\mu+\mu'}{A_1A_2}\right)F - C_{M_1}'\left(\eta\frac{\mu+\mu'}{A_1A_2}\right)F^*\\
&\Delta_d C_{L_2} = -C_{L_1}\left(\eta\frac{\mu^2-\mu'^2}{A_1A_2^2}\right)G + C_{M_1}'\left(\eta\frac{\mu^2-\mu'^2}{A_1A_2^2}\right)G^*\\
&\Delta_d C_{M_2} = \frac{1}{8}\Delta_d C_{L_2}
\end{aligned}\right.$$

$$
(42)\left\{
\begin{aligned}
&\Delta_s C_{L_2} = -\left(\frac{2\eta/A_2}{1+2\eta/A_2}\right)\Delta_m C_{L_2} \qquad \Delta_s C_{M_2} = \frac{1}{4}\Delta_s C_{L_2}\\
&\qquad C_{M_1}' = \frac{C_{M_1}}{A_1}(\mu+\mu')\\
&\qquad\qquad \textit{Lower wing}\\
&\Delta_x C_{L_1} = -C_{L_2}C_{L_{10}}\left(\frac{b_2}{b_1}\frac{r-r'}{2\pi A_2}\right)\cos\beta\\
&\qquad + C_{M_2}'C_{L_{10}}\left(\frac{b_2}{b_1}\frac{r-r'}{2\pi A_2}\right)\sin 2\beta\\
&\qquad \Delta_x C_{M_1} = \frac{C_{M_{10}}}{C_{L_{10}}}\Delta_x C_{L_1}\\
&\Delta_y C_{L_1} = C_{L_2}\left(\frac{b_2}{b_1}\frac{\eta}{A_2}\right)E^* - C_{M_2}'\left(\frac{b_2}{b_1}\frac{\eta}{A_2}\frac{r-r'}{2}\right)\cos 2\beta\\
&\qquad \Delta_y C_{M_1} = \frac{1}{4}\Delta_y C_{L_1}\\
&\Delta_c C_{L_1} = C_{L_2}\left(\eta\frac{\mu-\mu'}{A_2A_1}\right)F + C_{M_2}'\left(\eta\frac{\mu-\mu'}{A_2A_1}\right)F^*\\
&\Delta_d C_{L_1} = C_{L_2}\left(\eta\frac{\mu^2-\mu'^2}{A_2A_1^2}\right)G + C_{M_2}'\left(\eta\frac{\mu^2-\mu'^2}{A_2A_1^2}\right)G^*\\
&\qquad \Delta_d C_{M_1} = \frac{1}{8}\Delta_d C_{L_1}\\
&\Delta_s C_{L_1} = -\left(\frac{2\eta/A_1}{1+2\eta/A_1}\right)\Delta_m C_{L_1} \qquad \Delta_s C_{M_1} = \frac{1}{4}\Delta_s C_{L_1}\\
&\qquad C_{M_2}' = \frac{C_{M_2}}{A_2}(\mu-\mu')
\end{aligned}
\right.
$$

The method of using these results is essentially one of successive approximation. The following procedure has been found by the author to be most satisfactory:

A series of values of α are chosen for which the calculations are to be made. Usually four points (say $\alpha=0°$, $4°$, $8°$, $12°$) will be found sufficient to enable continuous curves to be drawn giving the values of the final coefficients over the usual flying range. The monoplane characteristics C_{L_0}, $C.\ P._0$, C_{M_0}, $\frac{C_{M_0}}{C_{L_0}}$, of each wing are then tabulated for the conditions corresponding to these angles of attack of the cellule. In making this tabulation it is best to first plot faired curves for the monoplane data and then pick the values used off of these curves, since experimental deviations from the smooth curve values are very much exaggerated in the succeeding calculations. From the monoplane data η may also be determined or the average value of $\eta=0.875$ may be used. The quantities μ, μ', r, r' are now calculated from the geometry of the wing cellule and the coefficients in parentheses $\left(\frac{b_1}{b_2}\frac{r-r'}{2\pi A_1}, \cdots\cdots, \eta\frac{\mu^2-\mu'^2}{A_1A_2^2}, \text{etc.}\right)$ are determined. The values of β corresponding to the assumed α's are listed and the various trigonometric functions required are tabulated for the α's in question. The magnitudes of the auxiliary functions $e, \cdots g^*$ corresponding to these values of α (i. e. β) are read from the charts and $E, E^*, \cdots G^*$ are determined.

Values of C_{L_1}, C_{L_2}, C_{M_1}, C_{M_2} are now assumed and ΔC_{L_1}, ΔC_{L_2}, ΔC_{M_1}, ΔC_{M_2} are calculated. The assumed quantities $C_{L_1}, \cdots C_{M_2}$, may either be the monoplane values, $C_{L_{10}}, \cdots C_{M_{20}}$, or they may be values estimated as more nearly correct by the calculator on the basis of his experience. In any case from the $\Delta C_{L_1}, \cdots \Delta C_{M_2}$ so determined new values of $C_{L_1}, \cdots C_{M_2}$ are obtained from the calculation which will in general be different from those originally assumed.

The process is then repeated, using the values obtained from this first step. The results of this second step are then introduced and the process repeated for the third time. Eventually the assumed and calculated values of $C_{L1}, \ldots C_{M2}$ will agree and these are then the final results. With a little practice in assuming reasonable values to begin with it is often possible to get the solution in a single step, and two steps should almost always suffice. Even when the first step does not lead to a solution it is often possible to estimate the effect of a second step and so write down the final result with satisfactory accuracy without actually repeating the calculations for the second time.

The process is, unfortunately, somewhat lengthy and tedious but the author has found that, after a little experience, the characteristics of a biplane at four angles of attack can be obtained by one man in a comparatively few hours. A portion of the data and calculations for a particular biplane are given below as an example and should indicate fairly clearly the general method.

Equal Wing Biplane

Data from N. A. C. A. Technical Note Number 310. [Airfoil section—Clark Y]

$$A_1 = A_2 = 6 \qquad b_1 = b_2$$

$$\sigma = +27° \qquad G = b_1/6 \qquad \text{No decalage}$$

$$\mu = 5.346 \quad r = 5.440 \quad \eta = 0.88 \quad C_{M1}' = .891 C_{M1}$$
$$\mu' = 0 \quad r' = 1.000 \quad \beta = 27° - \alpha \quad C_{M2}' = .891 C_{M2}$$

$$\frac{b_1}{b_2}\frac{r-r'}{2\pi A_1} = \frac{b_2}{b_1}\frac{r-r'}{2\pi A_2} = .118 \qquad \eta\frac{\mu+\mu'}{A_1A_2} = \eta\frac{\mu-\mu'}{A_2A_1} = .131$$

$$\frac{b_1}{b_2}\frac{\eta}{A_1} = \frac{b_2}{b_1}\frac{\eta}{A_2} = .147 \quad \eta\frac{\mu^2-\mu'^2}{A_1A_2^2} = \eta\frac{\mu^2-\mu'^2}{A_2A_1^2} = .116$$

$$\frac{b_1}{b_2}\frac{\eta}{A_1}\frac{r-r'}{2} = \frac{b_2}{b_1}\frac{\eta}{A_2}\frac{r-r'}{2} = .326 \quad \frac{2\eta/A_2}{1+2\eta/A_2} = \frac{2\eta A_1}{1+2\eta A_1} = .227$$

Consider $\alpha = 8°$ $\beta = 19°$

Monoplane data

$$C_{L_{20}} = 1.011 \quad C_{M_{20}} = .199 \quad C.P._{20} = 30.3\% \quad \frac{C_{M_{20}}}{C_{L_{20}}} = .197$$

$$C_{L_{10}} = 1.043 \quad C_{M_{10}} = .199 \quad C.P._{10} = 30.9\% \quad \frac{C_{M_{10}}}{C_{L_{10}}} = .191$$

Auxiliary functions

$$E=e\ (5.35,\ 19°)-e\ (0,\ 19°)=.02-.03=-.01$$

$$E^*=e\ (5.35,-19°)-e\ (0,-19°)=-1.70-.03=-1.73$$

Similarly $F=-.53$ $F^*=.95$ $G=.26$ $G^*=.19$

Also $\cos\beta=.946$ $\sin 2\beta=.616$ $\cos 2\beta=.788$

This data for $\alpha=8°$ is repeated for the other angles of attack to be investigated.

Equations (42) are then rewritten in the form:

$$(42')\begin{cases}\Delta_x C_{L_2}=C_{L_1}C_{L_{20}}\ (.118\cos\beta)+C_{M_1}'\,C_{L_{20}}\ (.118\sin 2\beta)\\ \Delta_y C_{L_2}=C_{L_1}\ (.147E)-C_{M_1}'\ (.326\cos 2\beta)\qquad \text{etc.}\end{cases}$$

in which the values of all the parameters independent of α are introduced. Next a table of the following type is prepared:

α	.118 cos β	.118 sin 2β	.147 E	.147 E^*	.326 cos 2β	.131 F	.131 F^*	.116 G	.116 G^*
0°									
4°									
8°	.112	.073	−.001	−.254	.257	−.069	.124	.030	.022
12°									

in which all of the values are filled in.

Considering a particular angle of attack, α, values are now assumed for C_{L_2}, C_{L_1}, C_{M_2}, C_{M_1}, from the latter of which C'_{M_2}, C'_{M_1}, are calculated. Equations (42′) are solved using these assumed values and the tabulated quantities. In our example ($\alpha=8°$) the following is obtained: (In working this example $\alpha=12°$ was calculated first, so that in making the initial assumptions for $\alpha=8°$ the computer had the benefit of the previous results. For this reason the initial assumptions approximate more nearly to the final values than would be the case in general.)

Assume:

$$C_{L_1}=.724 \quad C_{M_1}=.133 \quad C_{L_2}=.986 \quad C_{M_2}=.206$$

Then

$$\Delta_x C_{L_2}=.091 \quad \Delta_y C_{L_2}=-.031 \quad \Delta_s C_{L_2}=-.065 \quad \Delta_d C_{L_2}=-.019$$

$$\Delta_x C_{M_2}=.018 \quad \Delta_y C_{M_2}=-.008 \quad \Delta_d C_{M_2}=-.002$$

$$\Delta_m C_{L_2}=-.024 \quad \Delta_s C_{L_2}=.005 \quad \Delta C_{L_2}=-.019$$

$$\Delta_m C_{M_2}=\ .008 \quad \Delta_s C_{M_2}=.001 \quad \Delta C_{M_2}=\ .009$$

Hence $C_{L_2}=.992$ $C_{M_2}=.208$

Similarly $\Delta C_{L_1}=-.316$ $\Delta C_{M_1}=-.066$ from which

$$C_{L_1}=\ .727 \quad C_{M_1}=\ .133$$

The values of C_{L_1}, C_{L_2}, C_{M_1}, C_{M_2} originally assumed are now replaced by the values just determined and the process is repeated. In this case the final result is obtained after this second solution and is:

$$C_{L_2}=.992 \qquad C_{L_1}=.725$$

$$C_{M_2}=.208 \qquad C_{M_1}=.133$$

After a little practice the calculator can often avoid carrying through the calculation a second time, obtaining the final result by inspection of the first solution. The present example is an instance of this.

VI. RESULTS OF THE BIPLANE THEORY AND COMPARISON WITH EXPERIMENT

In order to investigate the nature of the results of the theory and to determine the agreement between theoretical and observed values, the characteristics of twenty biplanes were investigated for which experimental data were available. These biplanes were all without dihedral or sweepback. In general the agreement between theory and experiment is reasonably good, although the very considerable dispersion in the experimental results often makes comparison somewhat difficult. The sources from which experimental material was taken are given in References 9–17. A discussion of the results for the more important characteristics investigated follows.

The results for the lift coefficient of the biplane cellule (C_{L_B}) are comparatively simple. The curves of C_{L_B} when plotted against α are very nearly straight lines up to about ¾ C_{Lmax}, above which the theoretical curves begin to curve downwards. The agreement with experiment is in most cases perfect up to about ¾ C_{Lmax}. Above this point the theoretical curves usually fall off somewhat more rapidly than do the experimental ones. Biplanes with R. A. F. 15, Clark Y, U. S. A. 27, and Göttingen 387 airfoil sections were investigated. Variations in $dC_{L_B}/d\alpha$ are very small and are completely explained by the variations in the experimental values of $dC_L/d\alpha$ for the various monoplanes upon which the calculations were based. Hence we may conclude that changes in airfoil camber have no appreciable effect on the slope of the biplane lift coefficient curve. Airfoil camber does, however, have a small effect on the angle of zero lift of a biplane cellule (α_{0B}). Assuming always no decalage the following conclusions may be drawn: For small camber (R. A. F. 15) $\alpha_{0B}=\alpha_{0M}$, where α_{0M} is the angle of zero lift of the airfoil section acting as a monoplane. As the camber increases, however, α_{0B} tends to become lower than α_{0M}. For example, the experimental data used gave for the Clark Y $\alpha_{0M}=-5.8°$, while for an orthogonal biplane calculations (and experiment) gave approximately $\alpha_{0B}=-6.4°$. Similarly for a Göttingen 387 orthogonal biplane the results were $\alpha_{0M}=-6.7°$, $\alpha_{0B}=-7.7°$. Hence it appears that increasing airfoil camber tends make ot the angle of

zero lift of a biplane lower than that of the component wings acting as monoplanes.

Staggers from $-15°$ to $+30°$ were investigated, experiment and theory agreeing in general in indicating that stagger has no appreciable influence on the angle of zero lift. Stagger does, however, have a small but noticeable effect on $dC_{L_B}/d\alpha$. Zero or small positive staggers give the lowest values, which are definitely below those which occur for staggers of $+30°$. The following table indicates the nature of the results for equal wing biplanes with gap-chord ratio of one and without decalage. The experimental values differ from the theoretical ones by not over 1%, usually by much less.

R. A. F. 15		Clark Y		Gött. 387	
σ	$dC_{L_B}/d\alpha$	σ	$dC_{L_B}/d\alpha$	σ	$dC_{L_B}/d\alpha$
0°	3.57	0°	3.30	0°	3.27
29°	3.66	27°	3.59	30°	3.40

Glauert has given a very simple method of finding $dC_{L_B}/d\alpha$ for equal wing biplanes without decalage (Reference 18), which is apparently quite accurate enough for all practical purposes, except in the case of negative staggers. In this latter case both Glauert's and the present theories give values of C_{L_B} somewhat higher than those determined experimentally. In the examples which the author has investigated the present theory gives somewhat better agreement than does Glauert's but there still remains a small but apparently consistent discrepancy. Figure 8 gives curves of C_{L_B} vs. α for a particular case to indicate the nature of this discrepancy. Approximately the same types of curves are obtained in all of the cases of negative stagger investigated.

Decreasing the gap-chord ratio decreases $dC_{L_B}/d\alpha$ as is to be expected. Quantitative data on this point have not been obtained in this paper since the present theory, in view of its approximate nature, is not valid when the gap is much less than the chord.

Calculations have been made for one group of equal wing, U. S. A. 27 biplanes at unit gap-chord ratio and zero stagger, but with varying amounts of decalage (cf. Reference 15). Changing the decalage through the range from $-2°$ to $+4°$ had no perceptible influence on $dC_{L_B}/d\alpha$, and the change in the angle of zero lift was exactly what would be expected if there were no biplane interference effects. If these results are valid in general they signify that Glauert's simple theory mentioned above may be applied to equal wing biplanes with as well as without decalage.

For the effect of biplane interference on center of pressure position the present theory is in agreement with experiment in indicating that the effect is very small. An accurate comparison is rendered difficult by the very large disagreements between different sets of experiments. In certain cases the agreement is practically exact, while in others there are considerable deviations of the theory from experiment. The following tentative general conclusions may perhaps be drawn. For the upper wing the theory seems to give quite accurate results. For the lower wing there appears to be a general tendency for the theoretical *C. P.*'s to lie somewhat ahead of those observed, in certain cases as much as 4 or 5 per cent. For practical purposes, however, since the effect of interference is always small, it is probably accurate enough to assume that the relation between *C. P.* and individual lift coefficient is the same in the biplane as in the case of a monoplane wing.

The most interesting and important quantity discussed in this paper is the relative lift distribution between the two wings. It has seemed of most practical interest and convenience to consider this point as follows: Curves of the ratio "lift coefficient of the upper wing to lift coefficient of the biplane" have been plotted as ordinates against biplane lift coefficients as abscissae $\left(\frac{C_{l_2}}{C_{L_B}} \text{ vs. } C_{L_B}\right)$. Unfortunately the quantity C_{L_2}/C_{L_B} is extremely sensitive to small errors in C_{L_1} and C_{L_2}. For example, a very small change in effective decalage will change C_{L_2}/C_{L_B} from plus to minus infinity in the neighborhood of $C_{L_B}=0$. Thus very slight errors in the settings of the wings, slight variations in profile, and very small amounts of wash-in or wash-out will cause large variations in the experimental curves, particularly in the region of small lift coefficients. Several of the experiments were conducted by the pressure plotting method, in which cases it was

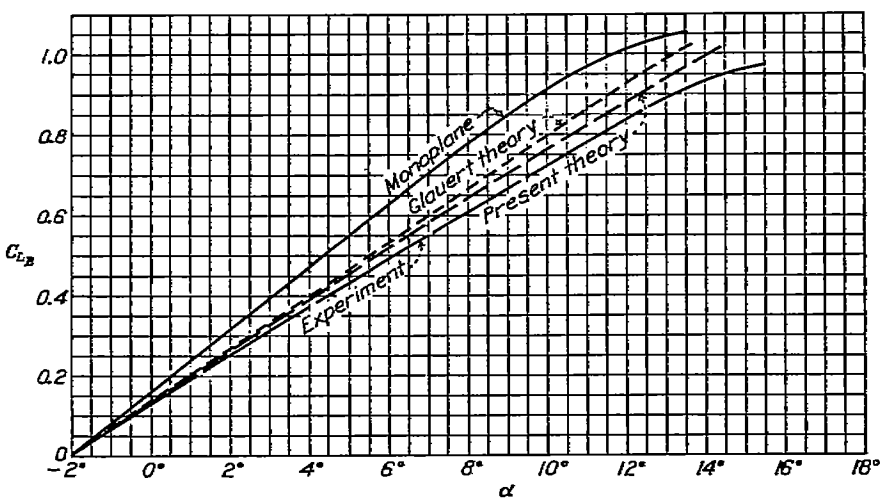

FIGURE 8.—R. A. F.-15 equal wing biplane

$A=6, \frac{G}{t}=1.0, \sigma=-15.6°$.

No decalage. Experimental data from R. & M. Nos. 857 and 816.

necessary to assume the coefficient of normal force equal to the lift coefficient, and it was often impossible to apply any legitimate corrections for the effect of wind tunnel interference. In addition practically all of the experiments were made at comparatively small values of the Reynold's Number, so that deviations from the potential flow assumed by the theory might be expected to be larger than at the high Reynold's Numbers occurring in actual flight. Furthermore, the calculations give very erratic results unless the monoplane experimental data are very carefully faired, since small variations in $C_{L_{10}}$ and $C_{L_{20}}$ are considerably magnified in the computation of interference effects. For all of the above reasons a very close agreement between theory and experiment is not to be expected. In certain cases considerable discrepancies are found, but on the whole the agreement is surprisingly good.

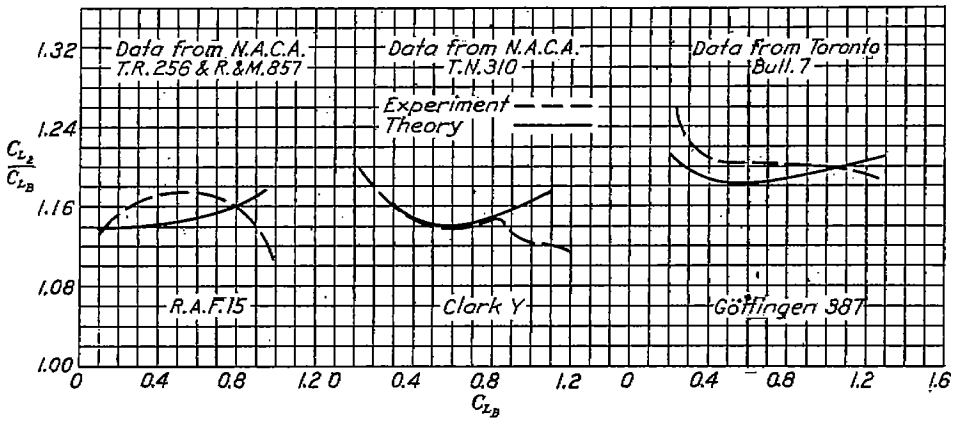

FIGURE 9.—Effect of airfoil camber on equal wing biplanes

$A=6, \frac{G}{t}=1.0, \sigma=+30°$. No decalage.

The general conclusions which may be drawn from the results are as follows:

The effect of airfoil camber on C_{L_2}/C_{L_B} is small but its exact nature has not yet been very satisfactorily determined. There does, however, appear to be a tendency for increasing camber to increase the amount by which C_{L_2}/C_{L_B} differs from unity. In order to illustrate this effect, as well as to indicate the nature of the agreement between theory and experiment, curves are given in Figure 9 for three equal wing biplanes which are approximately identical except for the airfoil sections used. It should be remarked in connection with these curves that the Clark Y biplane of the series had a small effective decalage of such a nature that above $C_{L_B} \approx 0.2$ the lower wing had a larger lift coefficient than the upper when each was tested separately as a monoplane. Hence for this biplane (above $C_{L_B} \approx 0.2$) C_{L_2}/C_{L_B} is less than it would be if the two wings were actually identical and there were no effective decalage. For negative staggers experiment and theory agree in substantiating the general conclusion stated above, for the cases investigated, although the effect is small. For zero stagger C_{L_2}/C_{L_B} differs very little from unity, and although the calculated results seem to confirm the above general conclusion, the considerable inconsistencies in the experimental data and the deviations of some of the individual results from those predicted by the theory render it difficult to make any generalizations in this case.

Stagger has a very definite effect, increasing stagger in the positive direction tending to increase C_{L_2}/C_{L_B}. As an example of this effect, theoretical and experimental curves are plotted in Figure 10 for an R. A. F. 15 equal wing biplane with various staggers. At 30° stagger the British and American tests were in such good agreement that a single curve could be plotted to represent both. At zero stagger the British results lie considerably below the American and the theoretical ones and have not been included in the figure. Figures 9 and 10 illustrate a phenomenon which has been

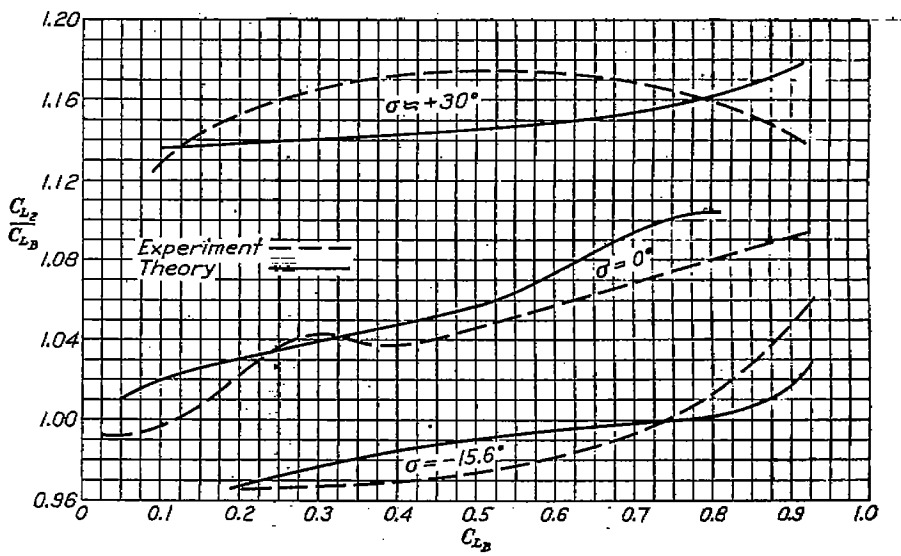

FIGURE 10.—Effect of stagger on equal wing biplanes

R. A. F.-15 biplanes $A=6, \frac{G}{t}=1.0$.

Experimental data from: N. A. C. A. T. R. 256
$\sigma=+30°$
$\sigma=0°$
and R. & M. 857
$\sigma=+30°$
$\sigma=-15.6°$

observed in practically all of the pertinent cases investigated. For positive staggers the experimental values of C_{L_2}/C_{L_B} fall off rapidly for values of C_{L_B}, which are large but still well below the normal burble point. The theoretical curves do not exhibit such a behavior. The discrepancy may be a real one or it may be due to the low Reynold's Numbers at which the tests were conducted.

The effect of decalage has been investigated with reference to the series of biplanes with decalage mentioned previously. The agreement with experiment, while not exact in every instance, is reasonably good, and is very much better than is the case for the early Betz theory.

Decreasing the gap tends to accentuate whatever interference effects exist, i. e., C_{L_B} is reduced and C_{L_2}/C_{L_B} becomes more different from unity. In the neighborhood of gap-chord ratio = 1, however, the changes in biplane characteristics for a small change in gap-chord ratio are comparatively small. This fact furnishes a convenient method of determining the range of validity of the present theory. For an R. A. F. 15 orthogonal biplane with gap-chord ratio = 0.6 the theory gives values of C_{L_2}/C_{L_B} which are much too high, while for the same biplane with staggers of $\pm 30°$ the agreement with experiment, while not good, is quite within reason. In the former case $\mu - \mu' = 10.0$, while in the latter it is 8.7. It appears from the limited data now available that the theory begins to deviate consistently from experience for $\mu - \mu'$ greater than 7 or 8, the deviations increasing rapidly as $\mu - \mu'$ rises above this value. This means that for normal orthogonal biplanes the theory should be valid for gap-chord ratios above approximately three-fourths. As the stagger increases either positively or negatively the permissible gap-chord ratios may be somewhat reduced. This breakdown of the theory for small gap-chord ratios was to have been expected in view of the assumptions made in its derivation.

As a final example the characteristics of an R. A. F. 15 unequal wing biplane have been calculated. C_{L_2}/C_{L_B} and the geometrical properties of the cellule are given in Figure 11. It will be seen that the agreement with experiment is satisfactory in spite of the small gap, the reason being that the overhang causes μ-μ' to have the small value of 5.3.

It should be mentioned that, following a conversation with Prof. L. Prandtl, the theory was also developed upon the assumption that the spacing of the trailing vortices is less than the span of the wing, being equal to the spacing between the "rolled up" vortices far behind an actual rectangular wing. (Cf. Chapter XII, Reference 1.) The formulæ so obtained are not much more complicated than those given above, but the application of them to any particular biplane involves considerably more labor than does the use of the simpler theory given here. The results appear to be slightly better, but it is felt that the increased accuracy is not enough to warrant the increase in complexity, so that this extension to the theory is not given here.

It is perhaps interesting to note the effect of the relative lift distribution on the induced drag of a biplane cellule without decalage, as calculated from Prandtl's well-known formula. The error introduced by assuming the lifts of the two wings proportional to their areas instead of taking into account the relative efficiencies was found to be only 3 per cent in the most extreme case investigated. This means that for practical performance calculation it is normally quite permissible to neglect the effect of relative efficiency as is usually done by the engineer.

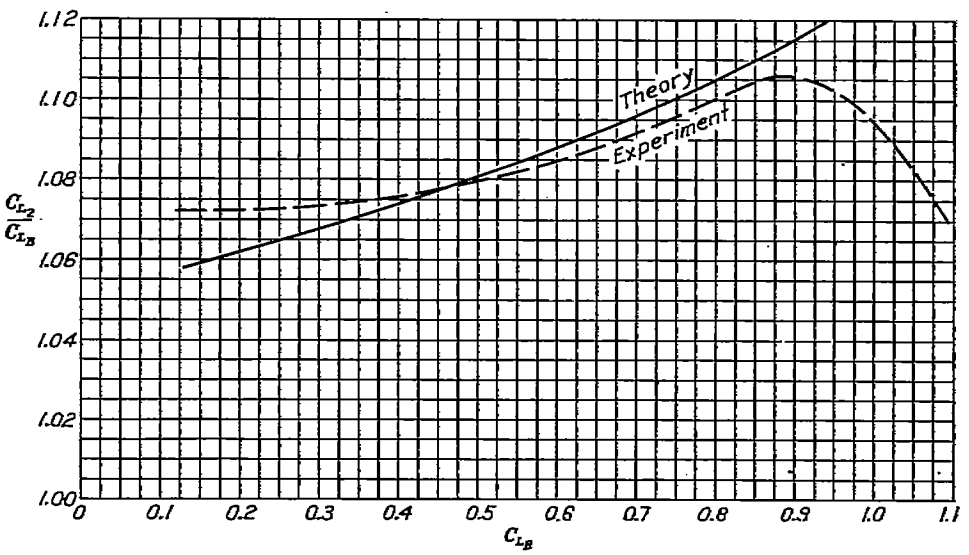

FIGURE 11.—R. A. F.-15 unequal wing biplane

$\frac{b_2}{b_1} = 1.5$, $A_1 = A_2 = 6.0$, $\frac{G}{t_2} = 0.75$.

$\sigma = +7°$. No decalage. Experimental data from R. & M. No. 937.

VII. CONCLUSION

The airfoil theory presented in this paper has been applied to the biplane problem only. It furnishes, however, a general method of attacking the problem of the behavior of an airfoil in a disturbed flow, whenever the disturbing velocities at the airfoil are known. For this reason it should have a fairly extended range of usefulness. The biplane theory itself is somewhat

cumbersome and the application to particular examples involves rather tedious computations, but it is difficult to see at present how a much simpler theory could be developed for so complex a problem without the introduction of unjustifiable assumptions. The agreement of the present theory with experiment, as indicated in the examples which have been investigated, is in general satisfactory, although considerable discrepancies have been found in certain cases. For the further investigation of these discrepancies and in view of the interest in the question per se, it is felt that it would be highly desirable to have a systematic series of experiments conducted at considerably larger Reynold's Numbers than any which have heretofore been employed in this connection.

The author wishes to take this opportunity of expressing his sincere appreciation of the assistance rendered by Mr. W. B. Oswald in checking several of the more lengthy differentiations and all of the numerical calculations involved in plotting the biplane auxiliary functions.

Daniel Guggenheim Graduate
School of Aeronautics,
California Institute of Technology,
Pasadena, Calif., *March 15, 1930.*

NOTATION EMPLOYED IN THE FINAL RESULTS OF THE BIPLANE THEORY

Subscript $(\ )_2$ implies "upper wing."

Subscript $(\ )_1$ implies "lower wing."

C_{L_1}, C_{L_2} = lift coefficients of the individual wings in a biplane

C_{M_1}, C_{M_2} = moment coefficients of the individual wings in a biplane
measured about the center of the airfoil chord and defined as positive for stalling moments.

$C_{L_{10}}, \cdots C_{M_{20}}$ = characteristics of the individual wings when tested separately as monoplanes at the angle of attack corresponding to $C_{L_1}, \cdots\cdots C_{M_2}$.

Δ_x, Δ_y, etc. = various components of the change in coefficients in passing from monoplane to biplane conditions.

b = span.

t = chord.

G = geometric gap defined as in Figure 7.

σ = geometric stagger defined as in Figure 7.

A = aspect ratio.

α = angle of attack of the biplane cellule defined as in Figure 7.

$e, \cdots\cdots g^*$ = auxiliary biplane functions given in Figures 12–16.

η = efficiency factor; $2\pi\eta$ = slope of the monoplane lift coefficient curve for infinite aspect ratio.

REFERENCES

1. Glauert, H.: The Elements of Aerofoil and Airscrew Theory. Cambridge University Press (1926).
2. Jeffreys, H.: On Aerofoils of Small Thickness. Proc. Roy. Soc. Lon. A 121 (1928) 22.
3. Munk, M.: General Theory of Thin Wing Sections. N. A. C. A. Technical Report No. 142 (1922).
4. Glauert, H.: Theoretical Relationships for an Aerofoil with Hinged Flap. British A. R. C. Reports and Memoranda No. 1095 (1927).
5. Betz, A.: Die Gegenseitige Beeinflussung Zweier Tragflächen. Zeitschrift für Flugtechnik und Motorluftschiffahrt, V (1914) 253.
6. Eck, Bruno: Neuartige Berechnung der aerodynamischen Eigenschaften eines Doppeldeckers. Zeitschrift für Flugtechnik und Motorluftschiffahrt, XVI (1925) 183.
7. Prandtl, L.: Der induzierte Widerstand von Mehrdeckern, Technische Berichte, II, 7. (For translation, see N. A. C. A. Technical Note No. 182: Induced Drag of Multiplanes (1924).)
8. National Advisory Committee for Aeronautics: Nomenclature for Aeronautics. N. A. C. A. Technical Report No. 240 (1926).
9. Cowley, W. L., and Lock, C. N. H.: Biplane Investigation with R. A. F. 15 Section. British A. R. C. Reports and Memoranda No. 774 (1921).
10. Cowley, W. L., and Lock, C. N. H.: A Comparison between the Aerodynamic Properties of Two Aerofoils of the Same Section, but with Square and Rounded Wing Tips Respectively. British A. R. C. Reports and Memoranda No. 816 (1921).
11. Cowley, W. L., and Jones, L. J.: Biplane Investigation with R. A. F. 15 Section. Part II. British A. R. C. Reports and Memoranda No. 857 (1922).
12. Irving, H. B., and Batson, A. S.: The Distribution of Pressure Over a Biplane with Wings of Unequal Chord and Span. British A. R. C. Reports and Memoranda No. 997 (1925).
13. Batson, A. S., Halliday, A. S., and Maidens, A. L.: The Distribution of Pressure Over a Monoplane and a Biplane with Wings of Unequal Chord and Equal Span. British A. R. C. Reports and Memoranda No. 1098 (1927).
14. Munk, Max M.: The Air Forces on a Systematic Series of Biplane and Triplane Cellule Models. N. A. C. A. Technical Report No. 256 (1927).
15. Mock, Richard M.: The Distribution of Loads between the Wings of a Biplane Having Decalage. N. A. C. A. Technical Note No. 269 (1927).
16. Knight, Montgomery, and Noyes, Richard W.: Wind Tunnel Pressure Distribution on a Series of Biplane Wing Models. N. A. C. A. Technical Note No. 310 (1929). These data were supplemented by tabular material contained in unpublished memoranda by Mr. Knight and Mr. Elton Miller, which was supplied to the author through the courtesy of the National Advisory Committee for Aeronautics.
17. Parkin, J. H., Shortt, J. E. B., and Gade, J. G.: Biplane Investigation. Aeronautical Research Paper No. 19, University of Toronto Bulletin No. 7 (1927).
18. Glauert, H.: Theoretical Relationships for a Biplane. British A. R. C. Reports and Memoranda No. 901 (1923)

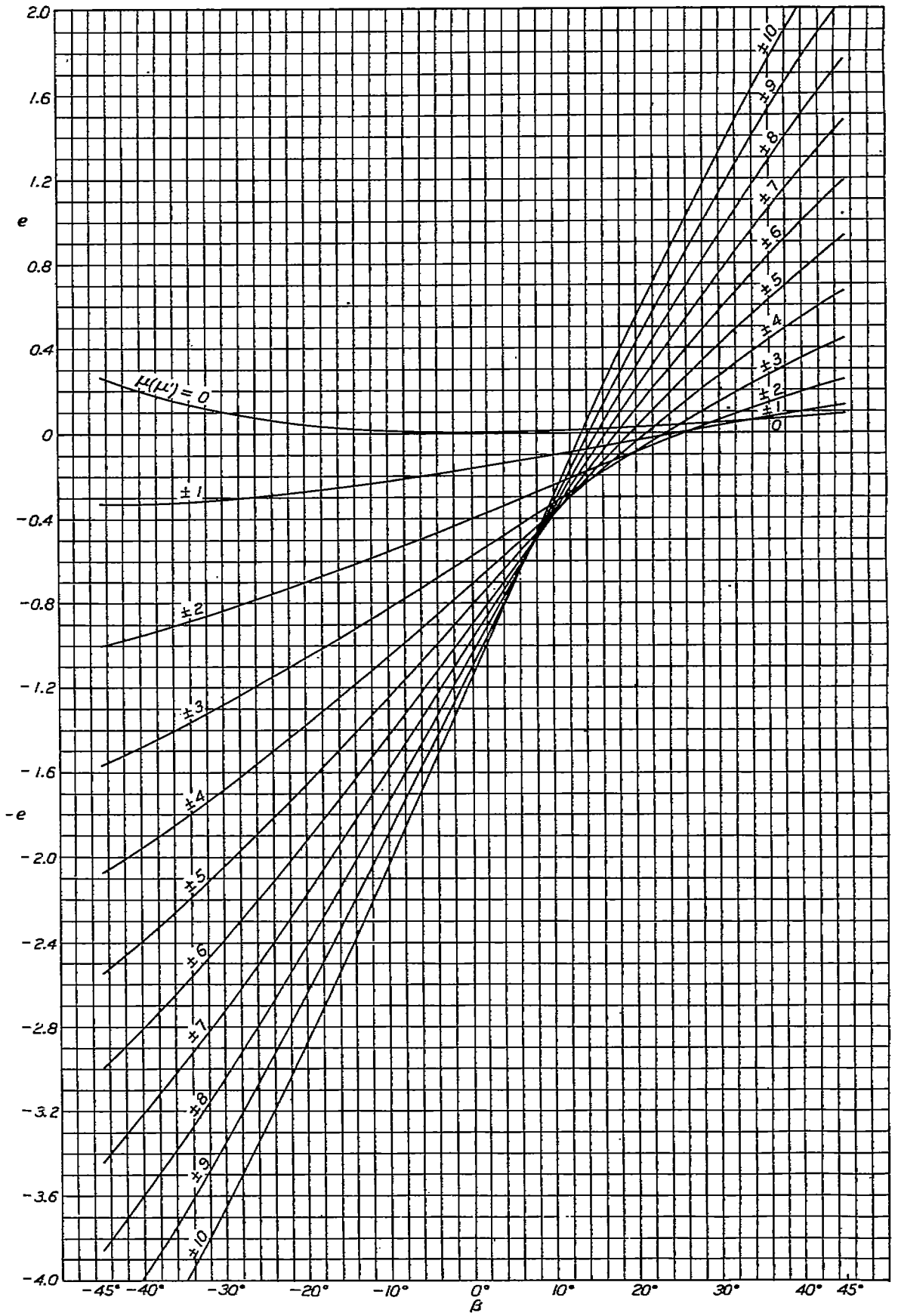

FIGURE 12.—Biplane theory auxiliary functions
e vs. β, μ (μ')

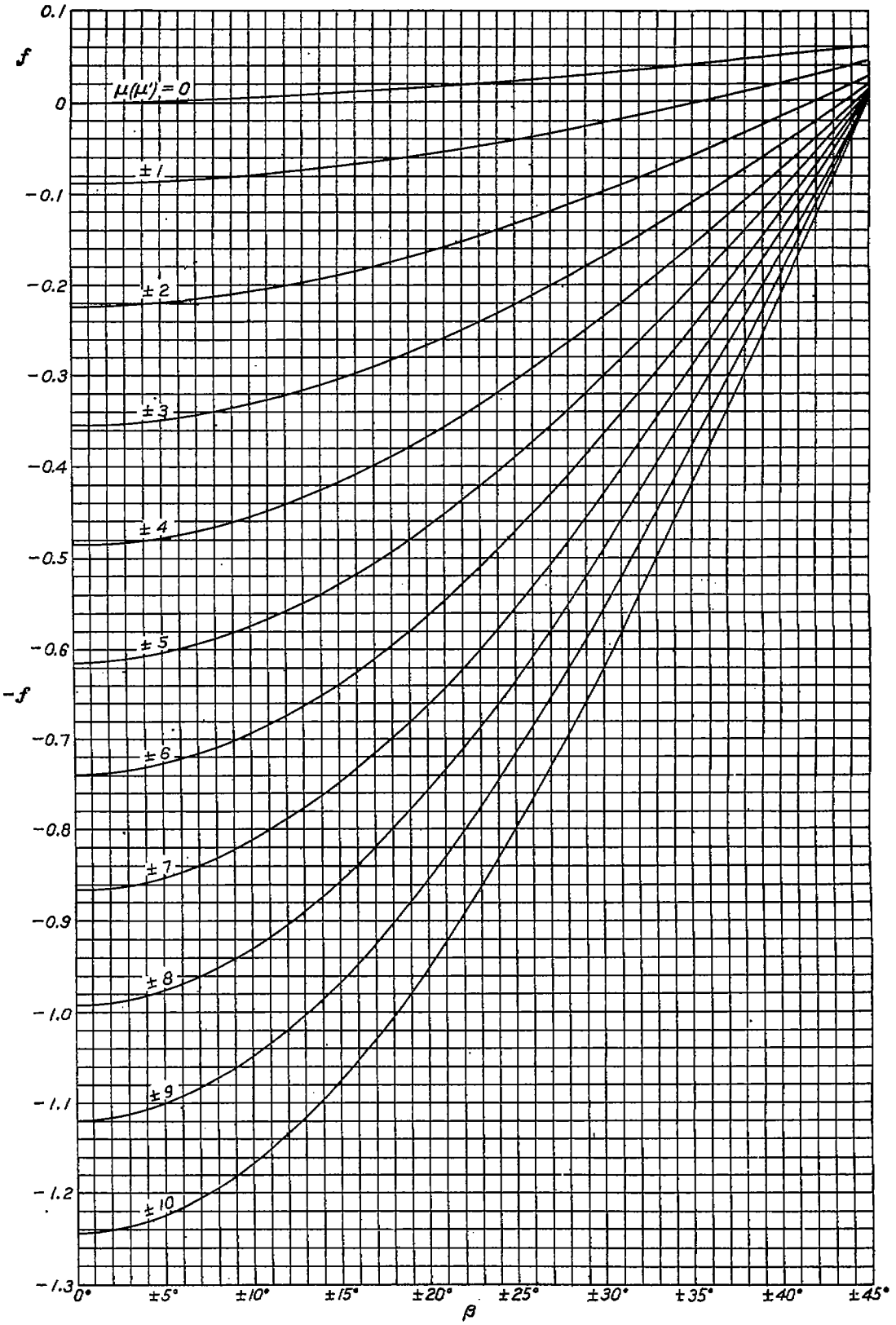

FIGURE 13.—Biplane theory auxiliary functions
f vs. β, μ (μ')
$(-\beta) = +f(\beta)$

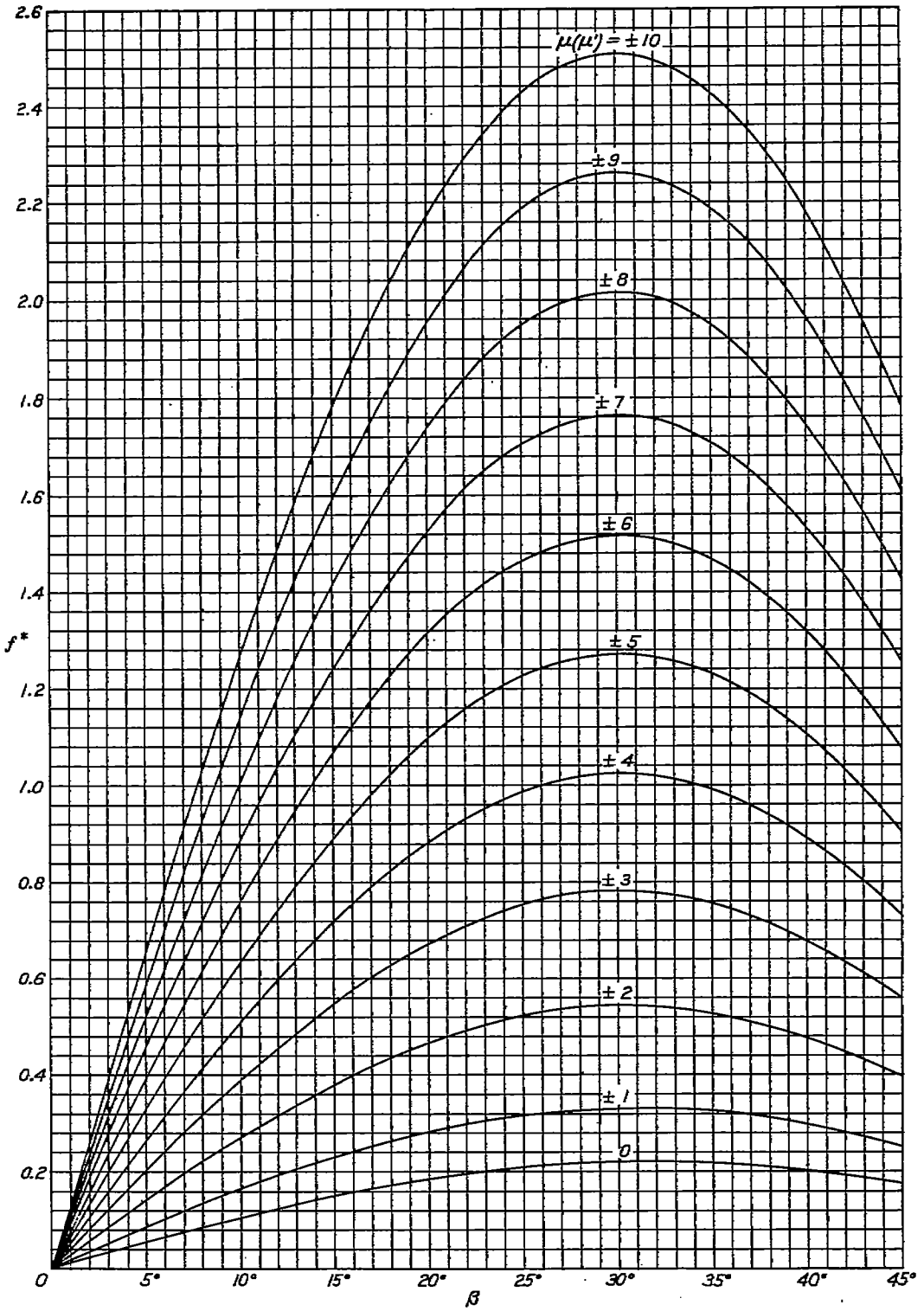

FIGURE 14.—Biplane theory auxiliary functions
f^* vs. β, μ (μ')
$^*(-\beta) = -f^*(\beta)$

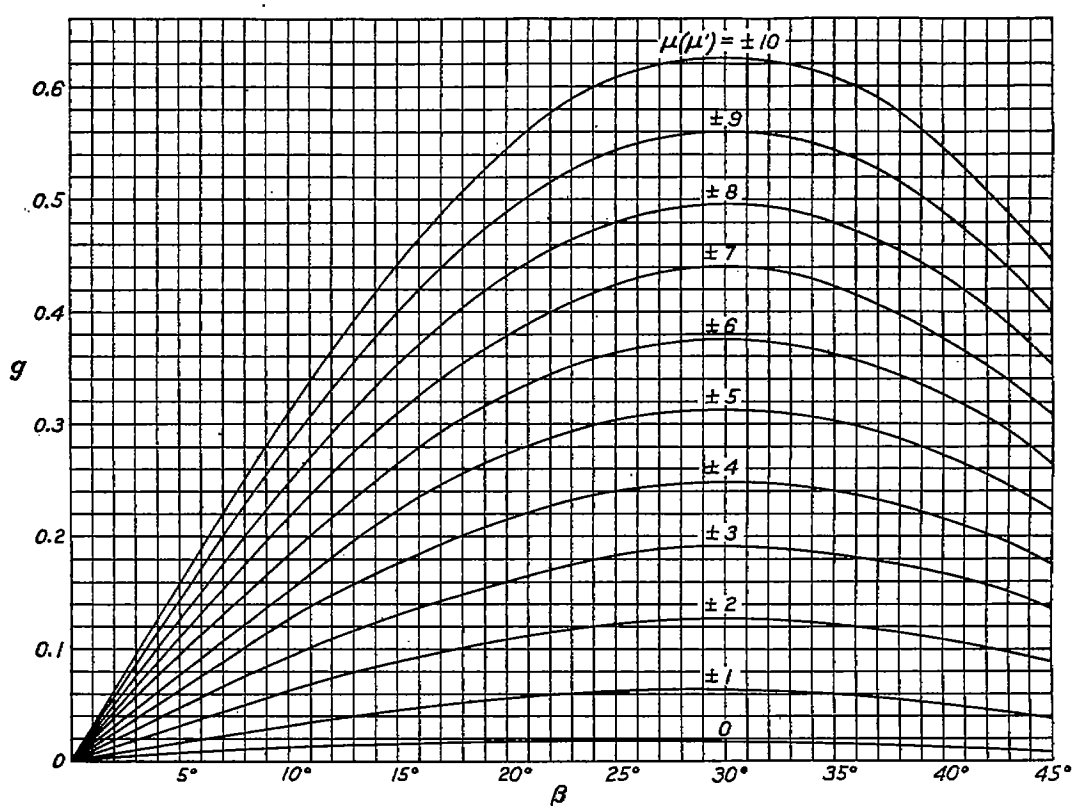

FIGURE 15.—Biplane theory auxiliary functions
g vs. β, μ (μ')
$g(-\beta) = -g(\beta)$

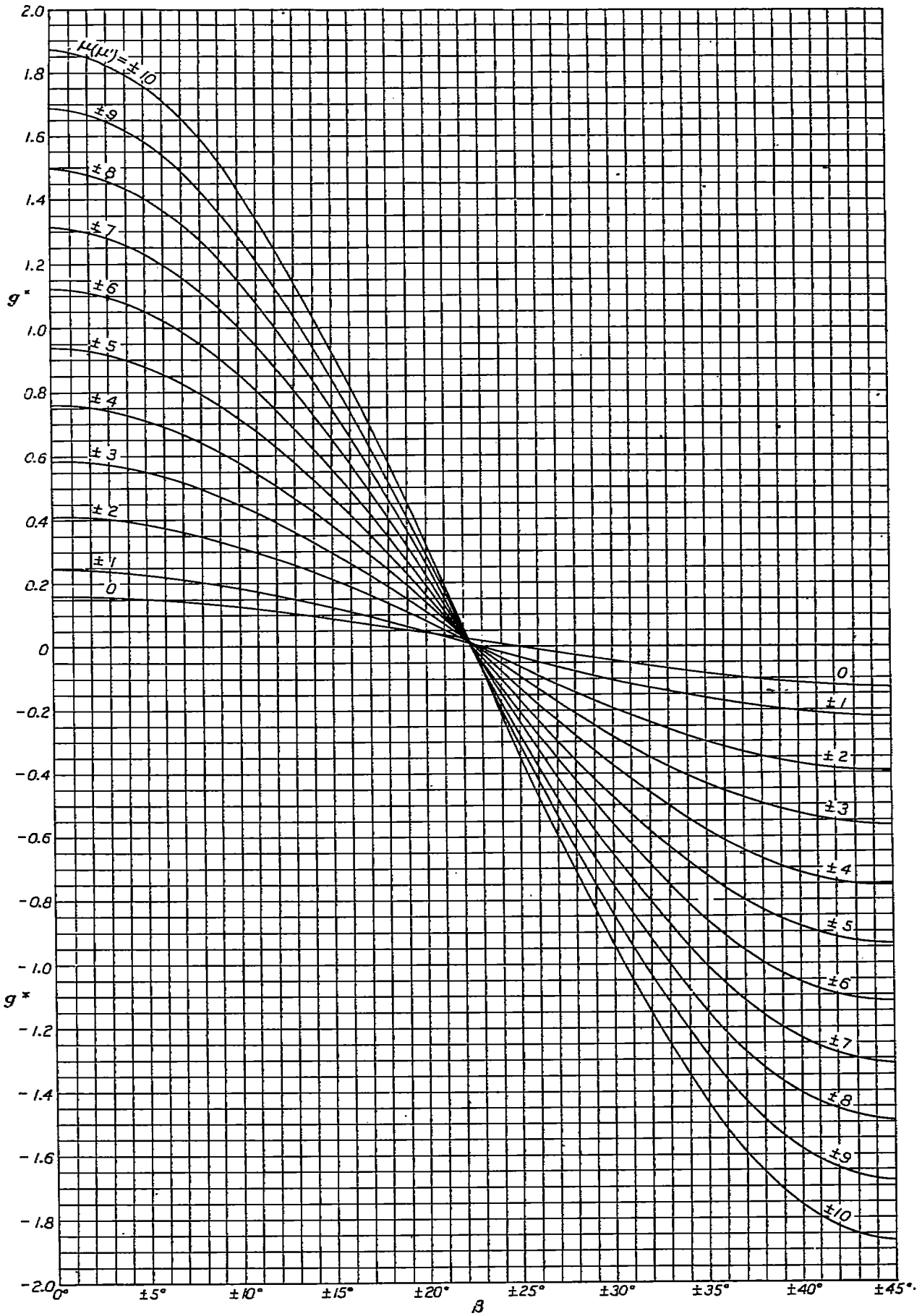

FIGURE 16.—Biplane theory auxiliary functions
g^* vs. β, μ (μ')
$g^*(-\beta) = g^*(\beta)$