REPORT No. 373

COEFFICIENTS OF DISCHARGE OF FUEL INJECTION NOZZLES FOR COMPRESSION-IGNITION ENGINES

By A. G. Gelalles

SUMMARY

This report presents the results of an investigation to determine the coefficients of discharge of nozzles with small, round orifices of the sizes used with high-speed compression-ignition engines. The injection pressures and chamber back pressures employed were comparable to those existing in compression-ignition engines during injection. The construction of the nozzles was varied to determine the effect of the nozzle design on the coefficient. Tests were also made with the nozzles assembled in an automatic injection valve, both with a plain and with a helically grooved stem.

It was found that a smooth passage before the orifice is requisite for high flow efficiency. A beveled leading edge before the orifice gave a higher coefficient of discharge than a rounded edge. Varying the length-diameter ratio from 1 to 3 for one of the orifices having a beveled leading edge was found to have no effect on the value of the coefficient. The results with the nozzles assembled in an automatic injection valve having a plain stem duplicated those with the nozzles assembled at the end of a straight tube of constant diameter. Lower coefficients were obtained with the nozzles assembled in an injection valve having a helically grooved stem.

When the coefficients of nozzles of any one geometrical shape were plotted against values of corresponding Reynold's Numbers for the orifice diameters and rates of flow tested, it was found that experimental points were distributed along a single curve.

INTRODUCTION

In designing injection valves for high-speed compression-ingition engines using solid injection, it is necessary to know the flow characteristics of several geometrical shapes of nozzles in order to determine the most suitable type to be used. The required performance of the injection valve varies for the different combustion conditions.

To design a valve utilizing all the energy supplied by the pump to the best advantage and to obtain the desired type of spray requires a knowledge of the flow characteristics of a number of geometrical shapes of nozzles, both open and closed, and combinations of nozzles and stem shapes. Failure to use a nozzle design giving the spray features required by the combustion chamber can only result in poor combustion efficiency.

With the small orifices employed in high-speed compression-ignition engines, the flow conditions through the orifices are controlled by the coefficients of discharge of the orifices. Some work has been done in determining these coefficients of discharge. Joachim (Reference 1) determined the coefficients of discharge of three nozzles that had sharp entering and exit edges. He used injection pressures up to 8,000 pounds per square inch and ratios of back pressure to injection pressure up to 0.8 for pressures between 1,000 and 2,000 pounds per square inch. Kuehn (Reference 2) determined the coefficients of discharge of several nozzle units with small orifices, but the injection pressures he used were somewhat lower than those actually employed for solid injection engines. Numerous other investigations on nozzles of different shapes have been made with larger sizes of orifices and lower injection pressures, but these results are of limited value when applied to the design of fuel injection valves for compression-ignition engines.

The purpose of this investigation was to determine the coefficients of discharge of nozzles with several geometrical shapes. Injection pressures and air back pressures comparable to those existing in the combustion chamber of compression-ignition engines were used. The investigation was conducted at the Langley Memorial Aeronautical Laboratory at Langley Field, Va.

A brief explanation of the meaning of the coefficient of discharge, a derivation of the algebraic expression for the coefficient, and a discussion of the factors affecting the flow of a liquid through an orifice are given in the appendix. For a more complete treatment of the subject the reader is referred to a paper by Hodgson (Reference 3), the report of the American Society of Mechanical Engineers Research Committee on Fluid Meters (Reference 4), a paper in the Bureau of Standards Journal of Research (Reference 5), and

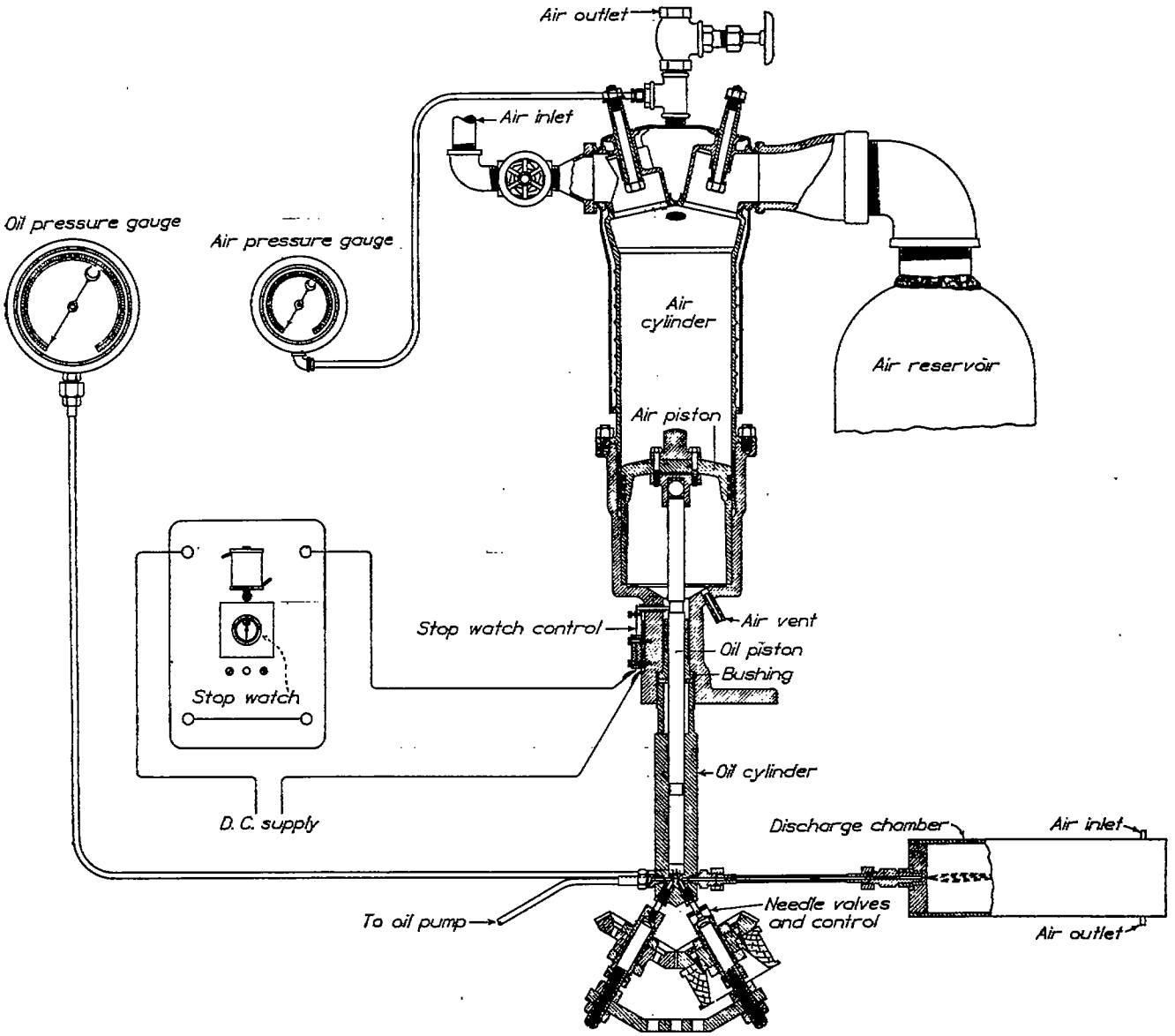

FIGURE 1.—Coefficient of discharge apparatus

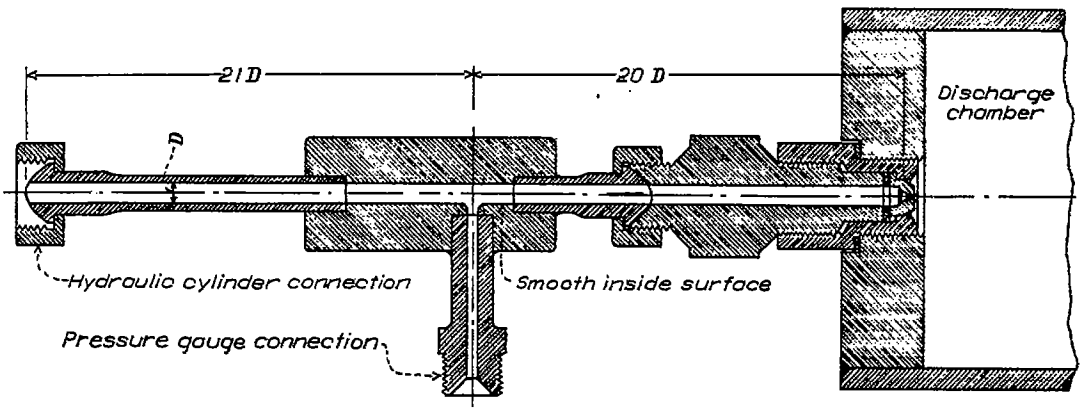

FIGURE 2.—Special flow passage with gauge connection

a more recent publication by the American Society of Mechanical Engineers on "Hydraulic Laboratory Practice" (Reference 6).

The terms used in the determination of the coefficients of discharge of the injection valve nozzles are defined as follows:

1. *Orifice.*—The smallest outside opening of the nozzle from which the jet of fluid issues.

2. *Orifice length.*—The depth of the opening or the length of the cylindrical portion that is of the same diameter as the orifice.

3. *Orifice throat.*—The cylindrical portion referred to in the definition for orifice length.

4. *Nozzle.*—In addition to the throat, that part of the passage which is beveled or rounded and which is not of a constant diameter.

APPARATUS AND METHODS

The apparatus used in this investigation (Figure 1) was similar to that employed by Joachim in his researches on the coefficients of discharge of small round orifices (Reference 1). It consisted of an air cylinder and a piston 5 inches in diameter used as a pressure intensifier for a hydraulic cylinder having a plunger 0.720 inch in diameter. To prevent leakage, the plunger moved through a closely fitting bushing, both of which were lapped separately. Two needle valves located at the bottom of the plunger cylinder permitted oil to be pumped into the cylinder or to be discharged through the orifice. The chamber, into which the oil was discharged through the orifice, was 3 inches in diameter and 18 inches in length. The back pressure into which the discharge took place was obtained from a compressed-air bottle connected to the discharge chamber.

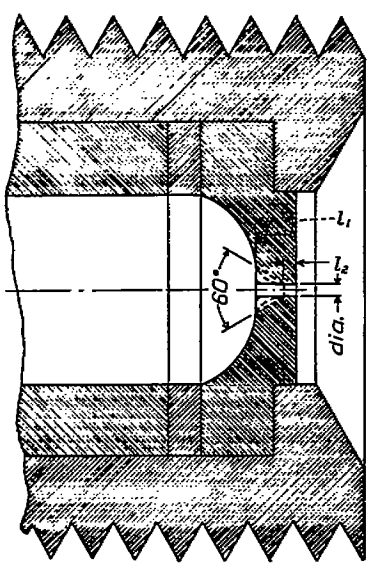

Orifice dia.	l_1	l_2
Inches	Inches	Inches
.015	.050	.015
.020	.060	.020
.025	.080	.025

FIGURE 3.—Concave-entrance nozzle assembly

As the discharge through the orifice took place, the time for the plunger to travel the distance between the two notches in the plunger was recorded by a one one-hundredth second stop watch as shown in the figure.

The timed volume of the oil discharged was equivalent to the volume of the plunger between the two notches, minus the leakage between the hydraulic plunger and bushing. To insure uniformity of flow during the discharge of the timed volume, the apparatus was designed so that 12 per cent of the total liquid volume was discharged through the orifice before the watch was started and 3 per cent after the watch was stopped.

The connection between the hydraulic cylinder of the apparatus and the discharge nozzle holder was a commercial seamless steel tube of three-sixteenths inch inside diameter and nine thirty-seconds inch outside diameter. The distance from the hydraulic cylinder to the nozzle was 30 tube diameters. The only sharp edges in the path of the flow were at the valve seats at the bottom of the hydraulic cylinder. The velocities through the tube varied from a minimum of 0.4 to a maximum of 4.5 feet per second. According to Gibson (Reference 7), the critical velocity for the tube, liquid and maximum pressures used, would be about 11 feet per second. The flow through the tube was, therefore, laminar. Computations made according to the method given in Reference 6 on the losses of head for the maximum velocity through the tube used in these tests showed the loss to be less than 1 pound per square inch. Since there were no other losses possible, the pressure at the hydraulic cylinder of the apparatus was transmitted virtually undiminished to the discharge orifice.

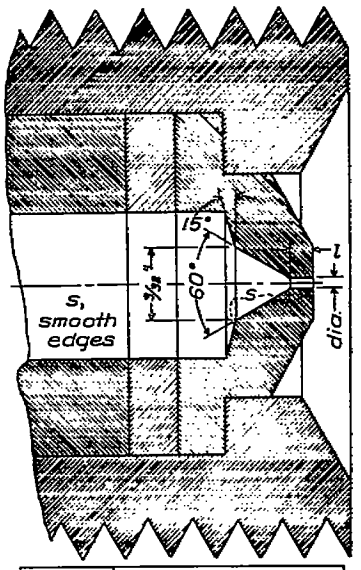

Orifice dia.	l
Inches	Inches
.008	.020
.014	.007, .014, .028, .041
.020	.080

FIGURE 4.—Bevel-entrance nozzle assembly

A special fitting, shown in Figure 2, was used to determine whether or not any pressure difference existed in the injection pressure readings taken at the bottom of the hydraulic cylinder and taken midway in the tube connection to the nozzle. Various injection pressures and back pressures representing extreme conditions were employed for these tests. Within the experimental error of the test data no difference in the pressure readings was observed. The pressure tap in this special fitting was placed about 20 tube diameters from the nozzle, to avoid the effect of any disturbance to the flow. This tap could not be used continually, as the sudden building up of pressure caused by the rapid opening of the outlet valve subjected the gage to severe strains.

Three nozzles with concave surfaces connecting the tube end and the inside edge of the orifice throat,

with the inside and outside edges of the throat sharp, as shown by full lines in Figure 3, were tested. These nozzles were the same that were tested by Joachim in his researches on the coefficients of discharge of small

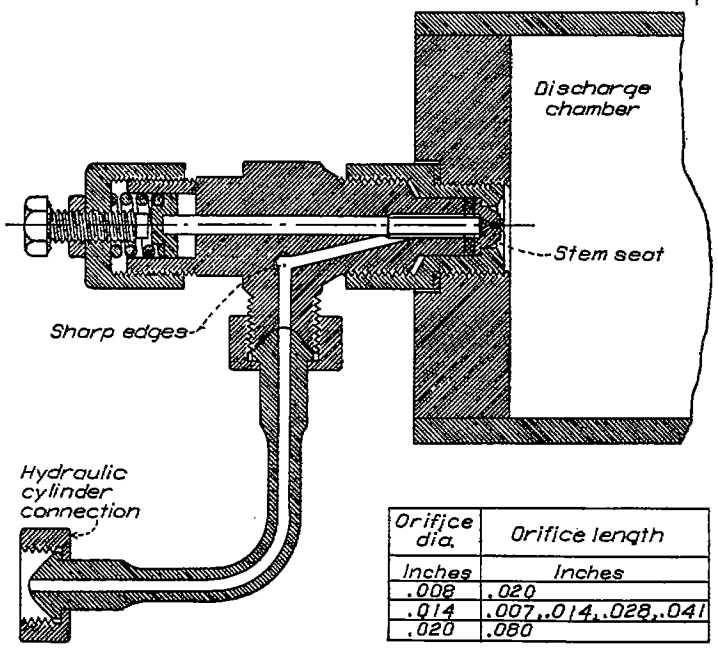

Orifice dia.	Orifice length
Inches	Inches
.008	.020
.014	.007, .014, .028, .041
.020	.080

FIGURE 5.—Automatic injection valve assembly with plain stem

round orifices (Reference 1). The tests with the inside edge sharp, therefore, served to check the previous results with the same nozzles and also to be used as a starting point for this investigation. Following the tests with the sharp edges, the inside edge of each orifice was rounded to approximately one sixty-fourth-inch radius, then to one thirty-second-inch radius, and finally was beveled to a 60° angle as shown by the dotted lines in the figure. A second set of nozzles was also tested that had the geometrical shape and dimensions shown in Figure 4. The length of the 0.014-inch orifice was varied from 0.5 to 3 times the diameter, in order to determine the effect of length-diameter ratio on the coefficient of discharge. Further tests were made to determine the coefficients for these nozzle assembled in a fuel injection valve with a plain stem and also with a helically grooved stem, as shown in Figures 5 and 6. The diameters and lengths of the orifices tested with each assembly are given in the tables accompanying the figures.

Injection pressures from 200 to 5,000 pounds per square inch were used in these tests. The maximum pressure employed with each orifice depended on the minimum time permissible for accurately measuring the oil discharged. Back pressures up to 0.8 of the injection pressures were employed in testing the nozzles. The Diesel fuel oil used had a specific gravity of 0.859 and an absolute viscosity of 0.048 poises at 80° F. and atmospheric pressure.

The equation from which the coefficient of discharge C was computed is

$$C=\frac{B}{a\left[\frac{2g(P_1-P_2)}{\rho}\right]^{1/2}} \tag{1}$$

where

B = actual rate of flow,
a = orifice area,
g = gravitational acceleration,
P_1 = static pressure at a section of the tube immediately before the nozzle, the injection pressure,
P_2 = static pressure into which the discharge took place, the back pressure,
ρ = density of the Diesel oil used.

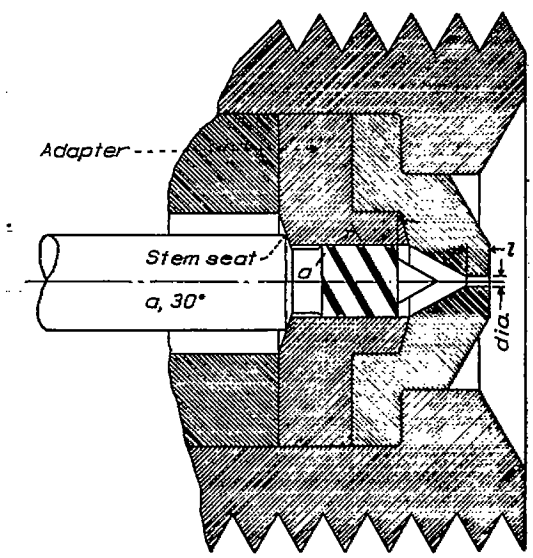

Orifice dia.	l
Inches	Inches
.008	.020
.014	.007, .014, .028, .041
.020	.080
.030	.120
.040	.160

FIGURE 6.—Automatic injection valve nozzle assembly with helically grooved stem

PRECISION OF RESULTS

The precision of results obtained in this investigation depended upon the precision of the several factors included in the coefficient of discharge equation. These factors are the volume of the liquid discharged, the hydraulic pressure before the nozzle, the chamber back pressure, the time of discharge for the known oil volume, the orifice area, and the density and temperature of the oil.

The displacement of the hydraulic plunger for the timed volume discharged was calculated from micrometer measurements of the plunger diameter and the length between the two shallow notches, taking into account the volume of the notches. The accuracy

of the micrometer measurements permitted the determination of the volume within 0.15 per cent. The leakage past the hydraulic plunger and sleeve was determined separately for all hydraulic pressures employed and has been included in the corrections for the coefficient. Corrections also were made for compressibility of the oil.

Bourdon spring pressure gauges, suitable to the pressure range to be investigated, were used to indicate the hydraulic pressures in the plunger cylinder, in the tube before the nozzle, and the air pressure in the discharge chamber. These gauges were calibrated frequently during the period of the investigation by means of a high-pressure and a low-pressure deadweight gauge tester. As the timed volume was discharged through the orifice the pressure fluctuated slightly. These fluctuations were not more than 10 pounds per square inch for the gauges measuring the oil pressures, and not more than 5 pounds per square inch for the gauges measuring the back pressures. Hence, the results obtained with the lower injection pressures contain a relatively higher error.

Any errors in the one-hundredths second stop watch were determined by comparison with a stop watch that had been calibrated by the United States Bureau of Standards for running, starting, and stopping errors. In the many hundreds of observations that were made during these tests with this stop watch, the maximum deviation from the mean was never more than 0.5 per cent.

The mean diameter of each orifice was measured with a dividing engine consisting of a microscope with micrometer attachment. The maximum deviation of the readings from the mean was not more than 0.3 per cent, so the error in the computed orifice area was not more than 0.6 per cent.

The specific gravity of the fuel oil was determined with a Westphal balance with an error of less than 0.1 per cent. The temperature of the oil during the period of the tests varied between 68° and 74° F. As the tests were conducted during the winter, no difficulty was experienced in maintaining the temperature of the room within these limits. The effect of this variation on the coefficient of discharge was negligible, for the Reynolds Numbers in nearly all of these tests were such that the viscosity, which is sensibly affected by small changes of temperatures in this range (Reference 8), had little or no effect on the rate of flow.

The precision of the results from the calculated deviations and estimated residual errors varies from 1.8 to 2.3 per cent. The error is greater in the results with the lower hydraulic injection pressures.

RESULTS AND DISCUSSION

CONCAVE-ENTRANCE NOZZLE TESTS

Jet discharges into air at atmospheric pressure.—Figures 7, 8, and 9 give the coefficients obtained with the concave entrance nozzles shown in Figure 3 when the discharges were made into the chamber containing

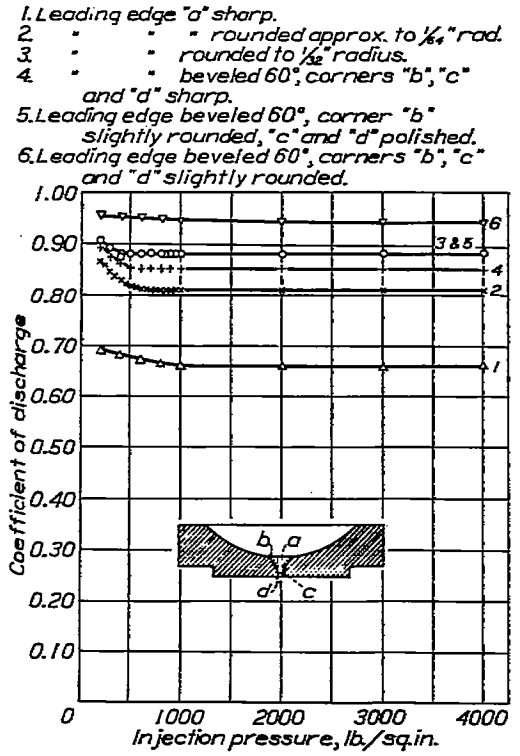

FIGURE 7.—Effect of injection pressure on coefficient of discharge. 0.015 inch diameter orifice. Atmospheric back pressure

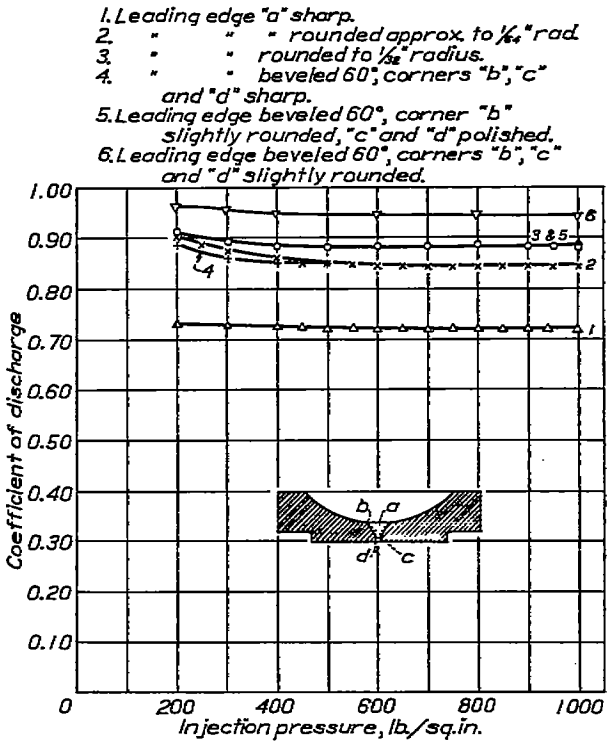

FIGURE 8.—Effect of injection pressure on coefficient of discharge. 0.020 inch diameter orifice. Atmospheric back pressure

air at atmospheric pressure. The characteristics of the curves for each geometrical shape tested are the same for all three nozzles. With but few exceptions,

the coefficient remained constant for injection pressures above 500 pounds per square inch. A rounding of the leading edge to approximately one sixty-fourth

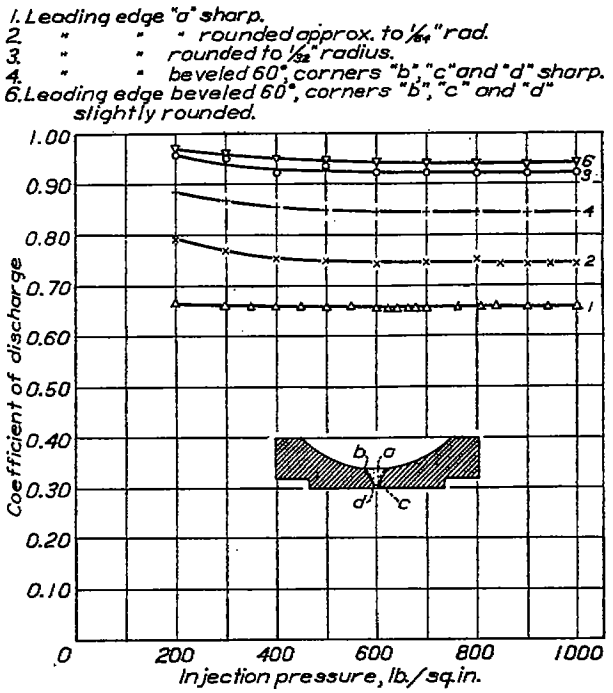

FIGURE 9.—Effect of injection pressure on coefficient of discharge. 0.025 inch diameter orifice. Atmospheric back pressure

inch radius increased the values of the coefficient 0.15 for the 0.015 inch, 0.12 for the 0.020 inch, and 0.09 for the 0.025 inch diameter orifice. By increasing the roundness to about one thirty-second inch radius, a further increase in the values of the coefficients was realized, 0.07 for the 0.015 inch, 0.04 for the 0.020 inch, and 0.17 for the 0.025 inch diameter orifice. Beveling the leading edge 60°, making the length of the orifice equal to the diameter and leaving the corners of the bevel sharp, gave coefficients several per cent lower than when the leading edge was rounded to one thirty-second inch radius. Slightly rounding corner b of the bevel again increased the coefficient by about 0.03 for both 0.015 and 0.020 inch diameter orifices. By slightly rounding all corners, b, c, and d, the coefficient was increased 0.09 for the 0.015 inch, 0.10 for the 0.020 inch, and 0.10 for the 0.025 inch diameter orifice. Thus, by altering the leading edge of the orifice from approximately sharp edges to a bevel of 60° with corners slightly rounded, the coefficients were increased from 0.66 to 0.94 for the 0.015 and 0.025 inch diameter orifices, and from 0.72 to 0.94 for the 0.020 inch orifice for all pressures tested above 500 pounds per square inch. The presence of sharp corners or rough surfaces between the upstream passage and throat of the orifice apparently decreased the efficiency of flow through the nozzle. The principal conclusion that can be drawn from these tests is that as the passage between the upstream side of the nozzle and the orifice throat is made smoother the coefficient of discharge approaches unity.

When examined, at the start of the tests under a microscope with a magnification of fifty diameters, the inside edge of the 0.020 inch orifice was seen to be pitted and slightly rounded as compared to those of the other two orifices, which were sharp. This was probably caused by the passage of unstrained oil through the orifice in previous experiments conducted at the Laboratory (Reference 1). It was probably due to the effect of this pitting and slight rounding of the leading edge that coefficients 0.06 higher were obtained in the first tests with the 0.020 than with the 0.015 and 0.025 inch orifices, curves No. 1 of Figures 7, 8, and 9.

According to the principles of similitude, when nozzles of similar geometrical shape are tested under similar working conditions, regardless of scale, liquid, or rate of flow, the data obtained may be represented by a single curve of coefficients of discharge plotted against corresponding values of Reynolds Numbers. Geometrically similar nozzles existed when the inside edge of the orifices was beveled to an included angle of 60° and the length was made equal to the diameter. Figure 10 shows the coefficients for the geometrically similar nozzles plotted against corresponding Reynolds Numbers. The points from all three nozzles for each geometrical shape lie on the same curve within the limits of experimental error. As can be reasonably

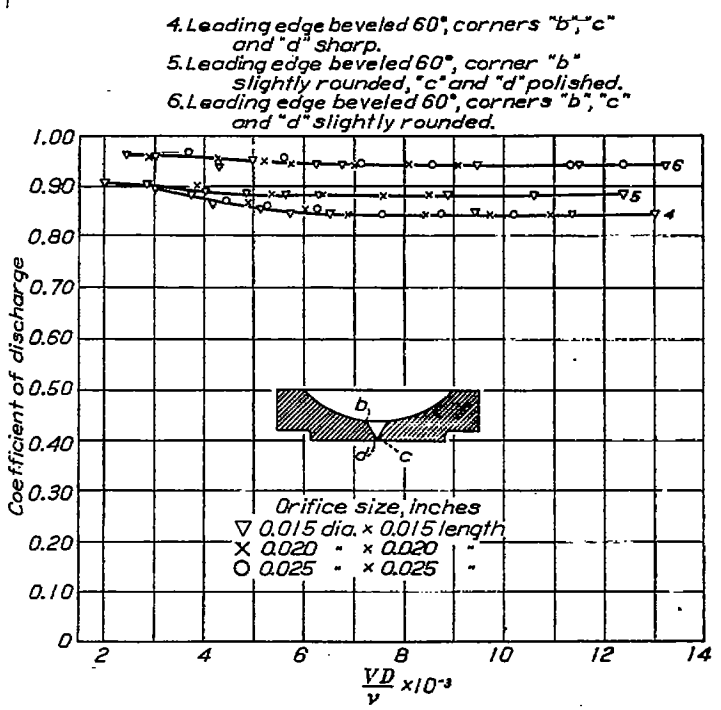

FIGURE 10.—Variation of coefficient of discharge with Reynolds number. Atmospheric back pressure

expected for such small differences in scale, the curves show the existence of hydraulic similitude in the flow through the nozzles. Following the explanation

given in the Appendix, the shapes of the curves of Figures 7, 8, and 9 indicate that, except for pressure below 500 pounds per square inch, the flow through the orifices was turbulent. The rising of the curve at the lower injection pressures is due to the presence of a semiturbulent motion in the orifice for which the viscosity effect becomes noticeable.

Information on the critical velocities of flow through the small orifices and nozzles of these tests is lacking. The following equation (Reference 7), however, was found to be true for tubes of larger diameters and lengths:

$$V_k = \frac{2{,}000\nu}{d}, \qquad (2)$$

and in gravitational units

$$V_k = \frac{2{,}000\mu g}{\rho d}, \qquad (3)$$

where, in English units

V_k = critical velocity of flow, feet per second.
μ = viscosity of the liquid, pounds-second per foot.[2]
g = gravitational acceleration, feet per second.[2]
ρ = density of the liquid, pounds per foot.[3]
d = orifice diameter, feet.
ν = kinematic viscosity, feet[2] per second.

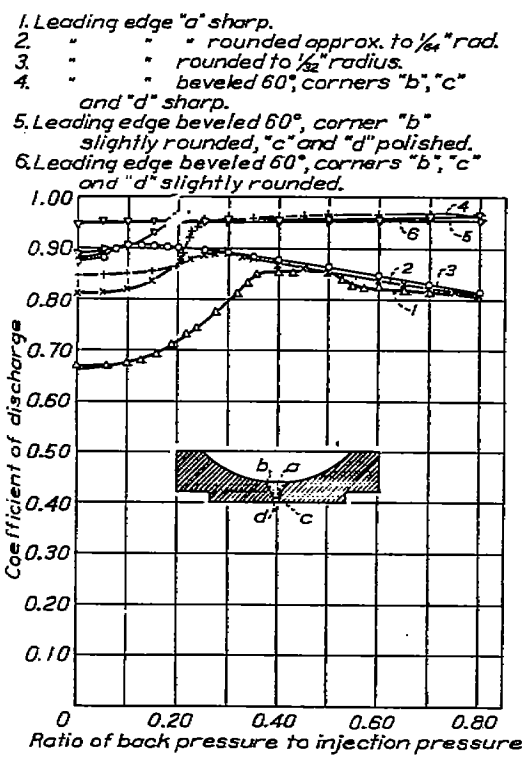

FIGURE 11.—Effect of back pressure on coefficient of discharge. 0.015 inch diameter orifice. Curves 1, 2, and 3, injection pressure 1,000 pounds per square inch. Curves 4, 5, and 6, injection pressure 1,000, 2,000, 3,000, and 4,000 pounds per square inch

By assuming the critical velocities through these orifices to be similar to those in a parallel tube of the same diameter, and the above equation to be applicable to these sizes of orifices, the values given in Table I are obtained for the range of diameters between 0.008 and 0.040 inch. It will be seen from

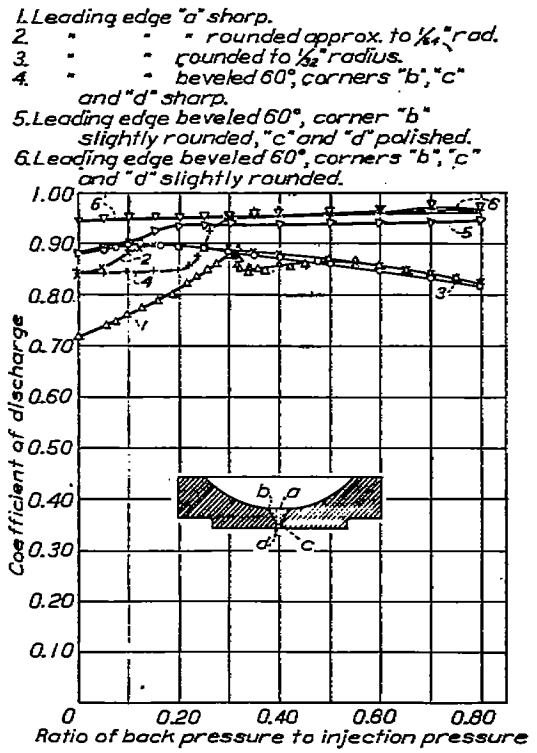

FIGURE 12.—Effect of back pressure on coefficient of discharge. 0.020 inch diameter orifice. Injection pressure 1,000 pounds per square inch

this table that the critical velocities approach the region of velocities through the orifices corresponding to the lower pressure differences employed in these tests.

Strictly similar geometrical shapes did not exist between the nozzles having the leading edge of the orifice rounded, as is apparent from the differences in the values of the coefficients with each nozzle for supposedly the same geometrical shape. This was probably due to the inexact rounding of the leading edge in proportion to the diameter, because of the difficulty of machining so small radii with satisfactory tolerances. Slightly rounding the corners of the bevel or the downstream edge of the orifices, however, did not so readily destroy the geometrical similarity between the nozzles.

Jet discharges into air at different pressures.—Figures 11, 12, and 13 show the coefficients with the same set of nozzles and geometrical shapes, but with the discharges made into the chamber containing air under pressure. The coefficients are plotted against the ratio of air back pressure to injection pressure. Excepting for the nozzles with the leading edge of the orifice beveled and with smooth corners, the coefficients of the nozzles for the same head differential did not agree with the values obtained when discharges were made into air at atmospheric pressure. This is in agreement with Joachim's results with the same nozzles (Refer-

ence 1). A comparison of the set of curves with and without back pressure suggests the possibility that the actual pressure at the throat of the orifice was different

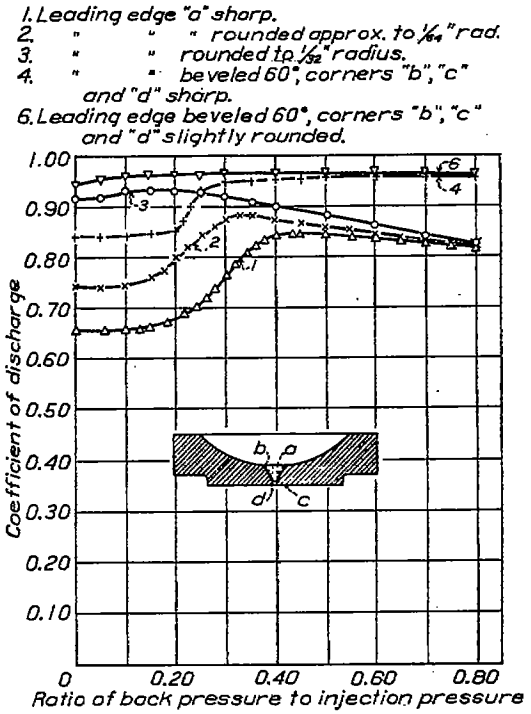

FIGURE 13.—Effect of back pressure on coefficient of discharge. 0.025 inch diameter orifice. Injection pressure 1,000 pounds per square inch.

for the two conditions. The air under pressure in the discharge chamber apparently was the cause of a disturbance to the motion through the nozzle that resulted in the creation of abnormal flow conditions.

The disparity between the values of the coefficient with the jet discharging into atmospheric air and those with the jet discharging into air at different pressures was greatest when the leading edge was sharp. The data show that when the nozzles had the leading edge sharp (Curves 1) the coefficients reached the maximum values of 0.85 for the 0.015 and 0.025 inch orifices and 0.89 for the 0.020 inch diameter orifice between the pressure ratios of 0.3 and 0.4. As the back-pressure ratio increased beyond these points, the coefficient ultimately decreased to about 0.82 at the pressure ratio of 0.8. By successively rounding the leading edge to one sixty-fourth and to one thirty-second inch radii (Curves 2 and 3), the pressure ratio at which the maximum coefficients were reached became lower. As the pressure ratio was increased, however, the coefficient again decreased to the minimum value of 0.82, regardless of the degree of roundness.

The coefficient characteristics of the nozzles having the leading edge beveled to 60° differed from those with the nozzles having the rounded edge. With the nozzles having the leading edge beveled and the corners of the bevel sharp (Curves 4), a maximum coefficient of about 0.96 was reached at the back pressure ratio of 0.25. Increasing the back pressure to beyond this ratio had no effect on the value of the coefficient for the injection pressures and pressure ratios tested. Slightly rounding the leading corner b of the bevel (Curves 5) decreased the ratio at which the maximum value was reached, and the coefficient beyond this ratio was virtually the same as for the nozzles having all corners of the bevel sharp. By slightly rounding corners b, c and d (Curves 6) the coefficients obtained were equal for all pressure ratios and, within the error of the observation, were equal to the maximum coefficients with the nozzles having the corners of the bevel sharp or the leading corner slightly rounded.

In comparing the set of curves shown in Figures 7, 8, and 9 with the set of curves in Figures 11, 12, and 13, two conclusions can be drawn which indicate the advantages of the nozzles with the beveled leading edges and corners in the flow passage slightly rounded.

First, higher coefficients are obtained by beveling the leading edge of the orifice and slightly rounding any sharp corners in the flow passage than by beveling the leading edge, but leaving the corners sharp, or by simply rounding the leading edge of the orifice.

Second, the coefficients for the nozzles with the bevel and the corners slightly rounded are unaffected by changes in the injection pressure or back pressure.

Different bevel angles were not tried, as this was beyond the scope of the present investigation. How-

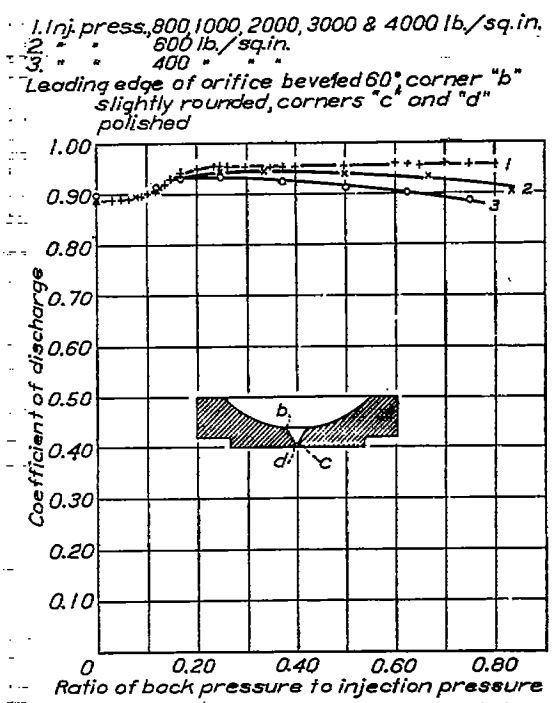

FIGURE 14.—Effect of back pressure on coefficient of discharge. Orifice size, 0.015 inch diameter × 0.015 inch length

ever, recent experiments by Zucrow (Reference 9) on the coefficient of discharge of submerged nozzles having the leading edge beveled and using small

differential heads, showed the values of the coefficient to vary but slightly for angles between 20° and 90°. The distribution of the experimental points in a plot

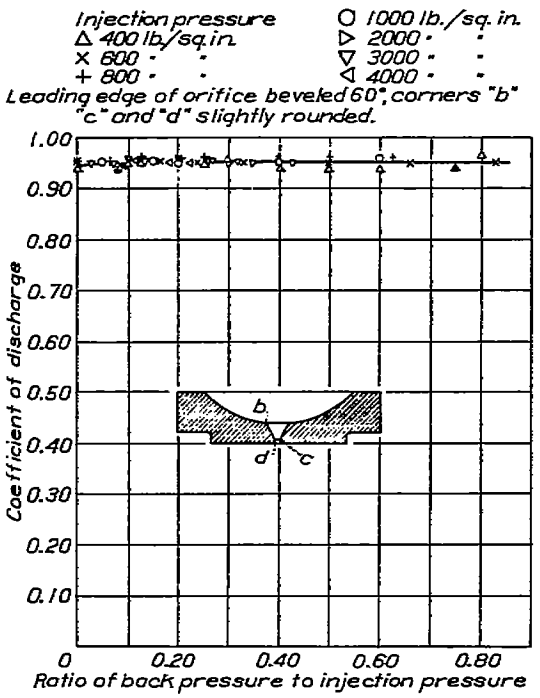

FIGURE 15.—Effect of back pressure on coefficient of discharge. Orifice size, 0.015 inch diameter × 0.015 inch length

of coefficient against bevel angle indicated the angle giving the highest coefficient to be not far from 60°.

Tests were also made with the injection pressures of 400, 600, and 800 pounds per square inch. (Figures

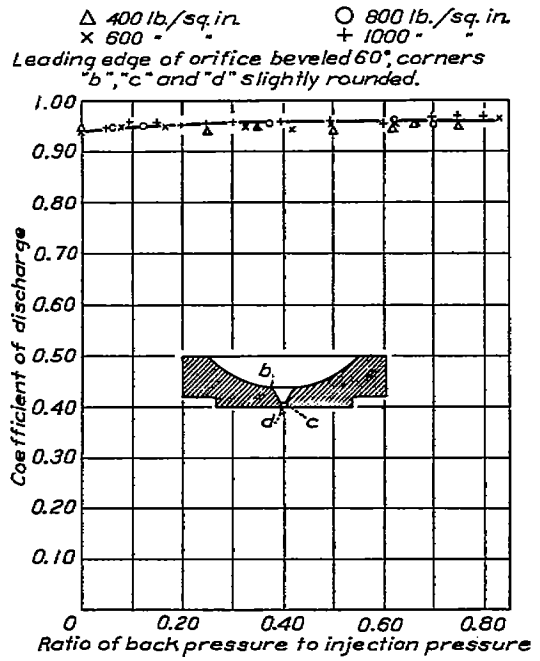

FIGURE 16.—Effect of back pressure on coefficient of discharge. Orifice size, 0.020 inch diameter × 0.020 inch length

14 to 17.) The coefficients obtained with the injection pressures of 400 and 600 pounds per square inch, when back pressures were used, differed from those with the injection pressures above 800 pounds per square inch for the same ratio, excepting the nozzles having the leading edge beveled and all corners of the flow passage smooth. Figure 14 gives the results with the 0.015 inch diameter orifice, having only the leading corner of the bevel slightly rounded. Similar results were obtained with the 0.020 inch diameter orifice. It will be observed that the coefficient was different with the lower injection pressures for the pressure ratios above 0.2. The greatest variation was 0.07 at a pressure ratio of 0.75 for the injection pressure of 400 pounds per square inch. Figures 15, 16, and 17 give the data obtained with the nozzles having the 60° bevel and smooth corners, and for varying injection pressures. Within the errors of the observation, the coefficients were equal for all three nozzles and all injection pressures tested, regardless of the back pressure to injection pressure ratio.

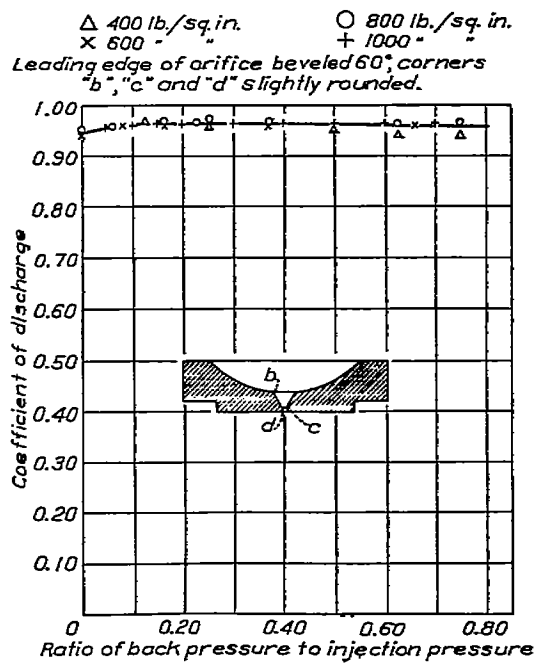

FIGURE 17.—Effect of back pressure on coefficient of discharge. Orifice size, 0.025 inch diameter × 0.025 inch length

BEVEL-ENTRANCE NOZZLE TESTS

Jet discharges into air at atmospheric pressure.—Figures 18, 19, and 20 show the coefficients with the nozzles having the beveled entrance (Figure 4) when the discharges were made into the chamber containing air at atmospheric pressure. It will be observed that the coefficients were virtually the same for the three nozzles and with the 0.014 inch diameter orifice for all length to diameter ratios tested, except for the ratio of 0.5. Excepting this smallest ratio, the efficiency of the flow was apparently unaffected by the magnitude of the orifice length or diameter for the conditions of these tests. Larger length-diameter ratios and different rates and type of flow would possibly give greater deviation. That this is possible was shown by Zucrow's tests (Reference 9) on submerged nozzles in

a type of flow that appeared to have ranged between turbulent and semiturbulent.

The decrease in the values of the coefficients for the ratio of 0.5 at pressures above 1,000 pounds per square

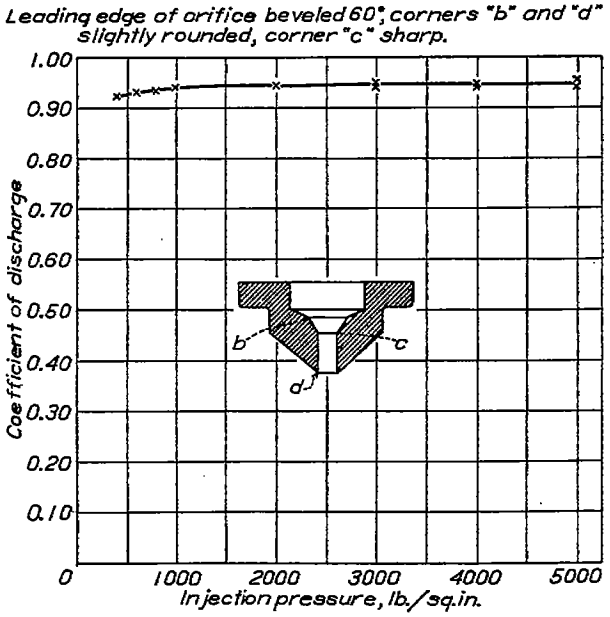

FIGURE 18.—Effect of injection pressure on coefficient of discharge. Orifice size, 0.008 inch diameter × 0.020 inch length. Atmospheric back pressure

inch was possibly due to the increase of jet contraction. As the jet passes the inner edge of the orifice, it contracts and forms what is known as the vena-contracta. The amount of the contraction depends on the differ-

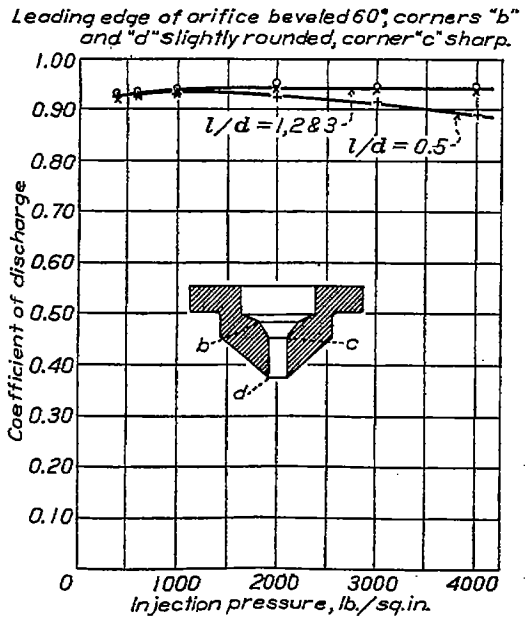

FIGURE 19.—Effect of injection pressure on coefficient of discharge. l=orifice length. d=orifice diameter. 0.014 inch diameter orifice. Atmospheric back pressure

ence of head, the properties of the fluid and, to a large extent, on the form of the leading edge of the orifice. High differences in head, low viscosity or sharp leading edges tend to increase the contraction. Low differences in head, high viscosity, and properly smoothed out passages immediately before the orifice tend to eliminate contraction. It is known that the jet expands immediately after contraction and, if sufficient length is provided, quickly fills the throat of the orifice again.

The distance from the entrance of the throat at which the contraction occurs depends to a large extent on the form of the leading edge of the orifice. The momentum given to the oil particles flowing past the wall of the passage for the nozzles of these tests was in a direction of 30° to the jet axis. The contraction of the jet, therefore, should have been at a distance of not more than $\sqrt{\frac{3}{2}}$ times the orifice diameter from the inner edge of the orifice. With the sufficient length provided when the higher length-diameter ratios were

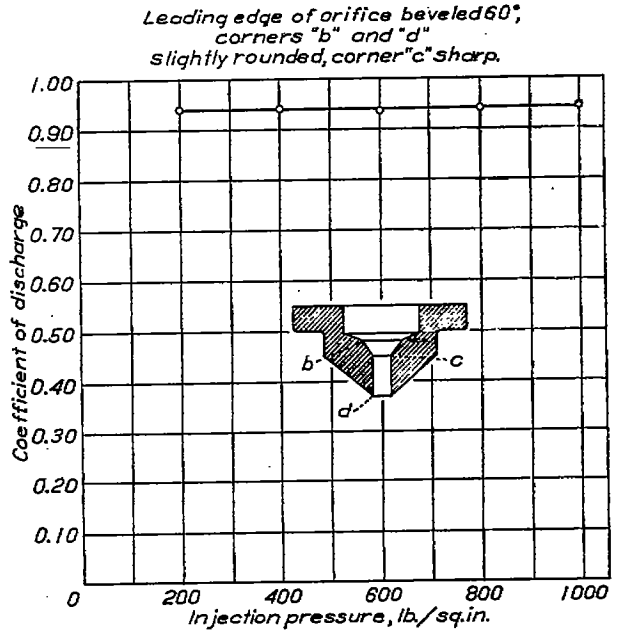

FIGURE 20.—Effect of injection pressure on coefficient of discharge. Orifice size, 0.020 inch diameter × 0.080 inch length. Atmospheric back pressure

used, the jet reexpanded and filled the throat of the orifice, so that the contraction coefficient became unity. In that event, the loss in efficiency to the flow was chiefly due to the loss of head in the eddying during the contraction and the following expansion, and the skin friction on the walls. When the length of the orifice was made so small that it did not provide sufficient interference to the jet reexpansion, the discharge coefficient became dependent on the contraction coefficient. As was explained previously, a high difference in head favors contraction, for then the centrifugal force urging the liquid particles toward the axis of the jet is increased. Thus the contraction of the jet, which was possibly small at the pressures below 1,000 pounds per square inch, with the smooth passage used before the orifice, increased as the injection pressure was increased and, consequently, decreased the coefficient of contraction. The result of

this contraction was the decrease of the coefficient of discharge.

Figure 21 shows the coefficients plotted as a function of corresponding Reynolds Number for the 0.008, 0.014,

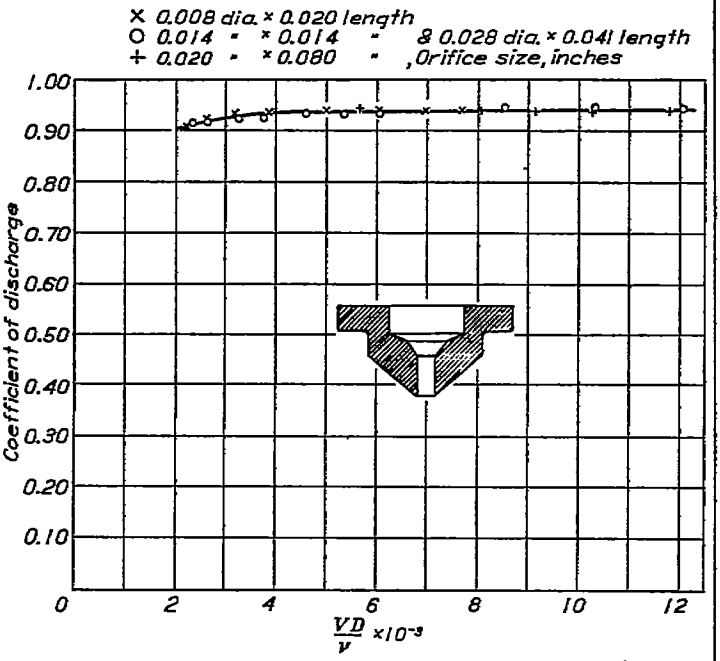

FIGURE 21.—Variation of coefficient of discharge with Reynolds number. Atmospheric back pressure

and 0.020 inch orifices with the length-diameter ratios between 1 and 4 and conditions given in Figures 18, 19, and 20. At the lower injection pressures the

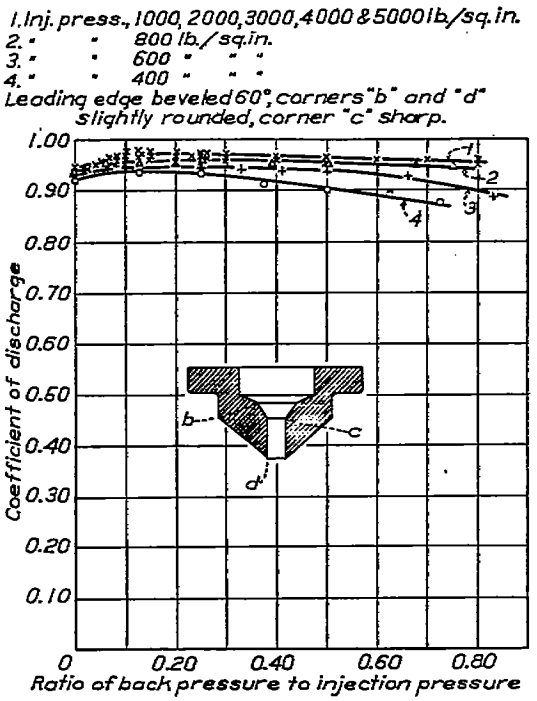

FIGURE 22.—Effect of back pressure on coefficient of discharge. Orifice size, 0.008 inch diameter × 0.020 inch length

coefficient decreases with the decrease of Reynolds Number. This is contrary to the results obtained with the nozzles of the other geometrical shape (Figure 10) in which the coefficient increases. If previous experimental results with larger sizes of orifices by Hodgson and others are considered, as explained in the

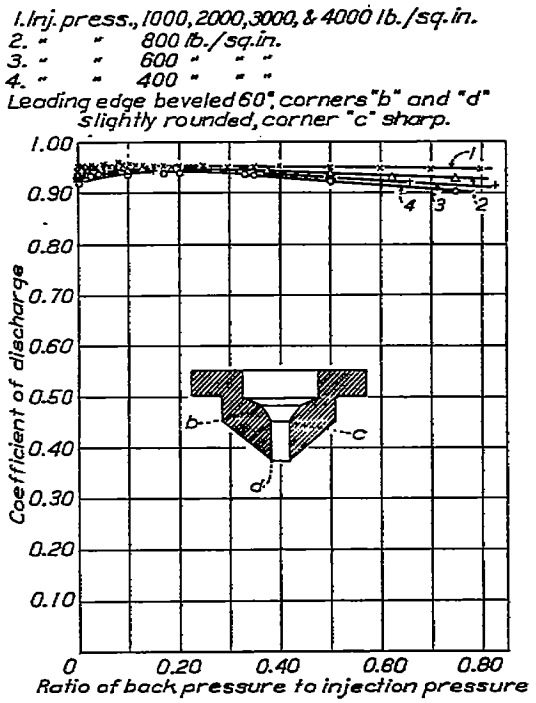

FIGURE 23.—Effect of back pressure on coefficient of discharge. Orifice size, 0.014 inch diameter × 0.014 inch length

Appendix, this means that the region of semiturbulent flow for the orifices having the concave entrance is

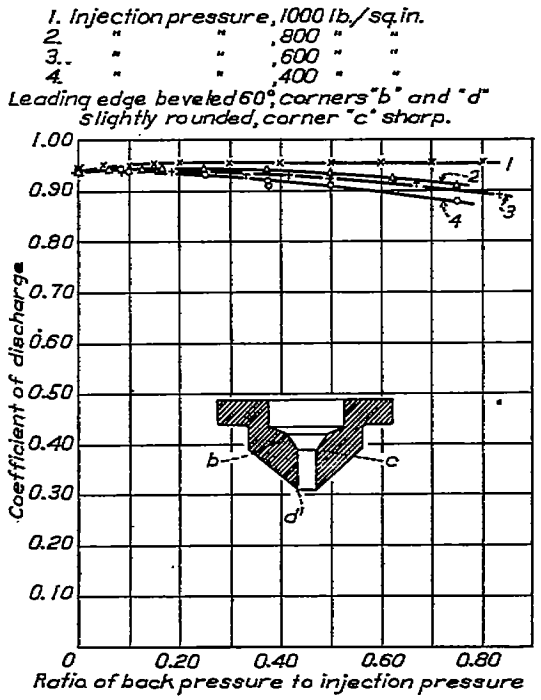

FIGURE 24.—Effect of back pressure on coefficient of discharge. Orifice size, 0.020 inch diameter × 0.080 inch length

longer than for those having the bevel entrance. With the nozzles having the concave entrance the coefficient curve must attain a certain maximum value before it

drops to zero at zero injection pressure, as the Reynolds Number is further lowered.

Jet discharges into air at varying pressures.—Figures 22, 23, and 24 give the data obtained with the same nozzles when the discharges were made into the chamber containing air at different pressures. The variation in the values of the coefficients between the three orifices was not more than 2 per cent from the mean for each test condition. The points for injection pressures above 1,000 pounds per square inch lie along the same curve for each orifice. It will be observed that there is a slight increase in coefficients for pressure ratios up to 0.1, this being especially noticeable with the 0.008 inch diameter orifice. The reason that these curves do not have the same shape as those obtained with the nozzles having a concave entrance from the upstream side (Figures 15, 16, and 17) was probably because corner c was left sharp and only b and d slightly relieved. The remarks made, therefore, regarding the disturbance created to the flow through the nozzles for Figures 11, 12, and 13 apply also to Figures 22, 23, and 24. The decrease in the value of the coefficient with the increase of back-pressure ratio for pressures below 1,000 pounds per square inch, is due to the influence of viscosity of the liquid at these low throat velocities.

TESTS WITH THE INJECTION VALVE ASSEMBLY

The results obtained with the nozzles assembled in an automatic injection valve having a plain stem, illustrated in Figure 5, duplicated those obtained with the assembly in Figure 4 for the same conditions. The data given in Figures 18 to 24, therefore, also represent the results with the nozzles assembled in the injection valve. The upstream passage, as will be noted in Figure 5, has both sharp corners and an elbow within a comparatively short distance from the nozzle, as compared to the nozzle holder illustrated in Figure 1 that was used with the assemblies of Figures 3 and 4. The valve shown in Figure 5 is of a type commonly used for high-speed compression-ignition engines. The lift of the stem for these tests was limited to 0.030 inch.

Additional tests were also made with lifts as low as 0.005 inch, which gave an area equivalent to a 0.043-inch orifice. No appreciable difference was observed in the values of the coefficients with the smaller lifts. An analysis of the approach velocities of the liquid past any section at the upstream passage, even at the stem lift of 0.005 inch, showed this velocity head to be negligible as compared to the pressure head.

Since there was no difference in the values of the coefficients with the nozzles assembled in the valve as compared to those that had a smoother upstream passage, the head losses from skin friction and eddying, due to presence of sharp corners, and the loss due to the restrictions on the upstream passage were negligible.

TESTS WITH A VALVE HAVING A STEM WITH HELICAL GROOVES

The results obtained with the nozzles assembled in the automatic injection valve when a helically-grooved stem was used are shown in Figures 25, 26,

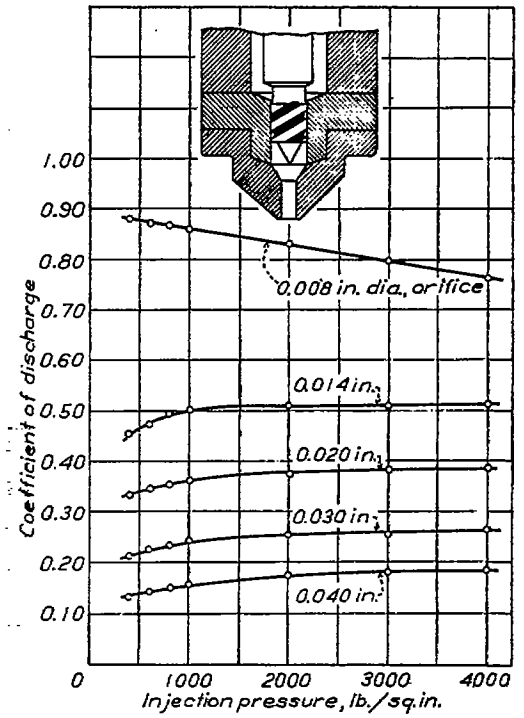

FIGURE 25.—Coefficients of discharge of a valve having a stem with helical grooves. Atmospheric back pressure. Coefficients computed on the basis that the area of efflux equals the cross-sectional area of the orifice

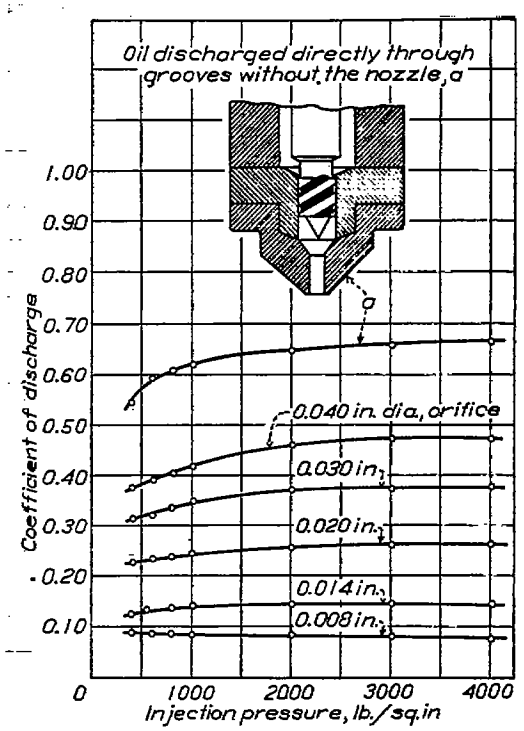

FIGURE 26.—Coefficients of discharge of a valve having a stem with helical grooves. Atmospheric back pressure. Coefficients computed on the basis that the area of efflux equals the combined cross-sectional area of the helical grooves

and 27. The nozzles listed in the table accompanying Figure 6 were used. The combined cross-sectional area of the four grooves was equivalent to that of a 0.025 inch diameter orifice.

Figure 25 gives the coefficients of the nozzles plotted against injection pressures for the range between 400 and 4,000 pounds per square inch. The coefficients given in Figure 25 were computed on the basis that the value of a of equation (1) was equal to the cross-sectional area of the orifice. The magnitude of the

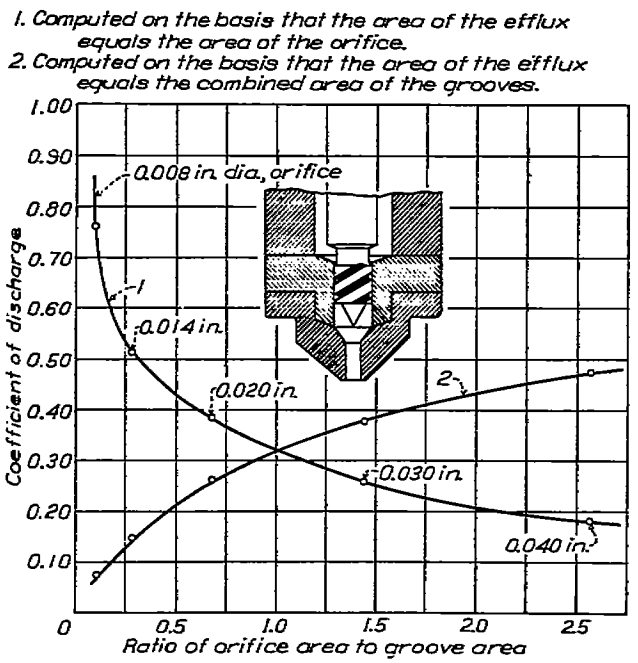

FIGURE 27.—Effect of ratio of orifice area to groove area on coefficient of discharge. Atmospheric back pressure. Injection pressure, 4,000 pounds per square inch

energy loss can also be shown if the coefficients are computed on the basis that a equals the combined area of the helical grooves, and then compared with the coefficients obtained when the valve was assembled with the centrifugal stem and adapter without the nozzle. The results with the coefficients thus computed, together with the coefficients without the nozzle are given in Figure 26.

Figure 27 gives the coefficient as a function of the ratio of the orifice area to the groove area for the hydraulic injection pressures of 4,000 pounds per square inch when the coefficients were computed by both methods. As the ratio of areas becomes smaller the efficiency of the flow through the orifice is increased, and the coefficients approach the values obtained with the valve assembly having a stem with no helical grooves. Apparently, large energy losses occur as the liquid passes through the restricted groove passages.

CONCLUSIONS

This investigation has shown that for the small sizes of nozzles employed for high-speed compression-ignition engines a smooth entrance passage to the throat of the orifice is necessary for a high efficiency of flow. A beveled leading edge to the orifice gives higher coefficient than a rounded leading edge. The coefficient of discharge depends upon the geometrical shape of the nozzle and not upon the size of the orifice.

For the nozzles having the leading edge of the orifice beveled and all corners in the flow passage slightly rounded, the coefficients were identical, regardless of the effective head or the back pressure that was employed. For the nozzles having the leading edge beveled and corners in the flow passage sharp, or the leading edge only rounded, the coefficients were different for the conditions with and without back pressure when the same effective head was used.

Varying the length-diameter ration from 1 to 3 for a 0.014-inch diameter orifice having a beveled leading edge was found to have no effect on the values of the coefficient. However, for a ratio of 0.5 the coefficient decreased with the increase of pressure above 1,000 pounds per square inch.

Tests with the nozzles assembled in an automatic injection valve, with sufficient stem lift to give no throttling, gave the same coefficient as those with the nozzles at the end of a straight tube. Low coefficients were obtained when tests were made with the nozzles in an injection valve containing a stem with helical grooves.

The result of experiments from nozzles of any one geometrical shape for the orifice diameters and rates of flow tested were represented by a single curve of coefficients of discharge versus Reynolds Numbers.

LANGLEY MEMORIAL AERONAUTICAL LABORATORY,
NATIONAL ADVISORY COMMITTEE for AERONAUTICS,
LANGELY FIELD, VA., *September 11, 1930.*

APPENDIX

DEFINITION AND DERIVATION OF THE ALGEBRAIC EXPRESSION FOR THE COEFFICIENT OF DISCHARGE

The algebraic expression for the ideal rate of flow of a liquid through an orifice is at best an approximate statement of a physical phenomenon which is so complicated that it is quite impossible to construct a complete mathematical theory for what actually occurs. It is conventionally used because it is amenable to treatment by simple mechanical principles. This statement is based on the assumption that several important conditions are satisfied. These are:

First, at a transverse section immediately before the nozzle, the static pressure is uniform across the section and the velocity of flow is parallel to the axis perpendicular to the section and uniform throughout.

Second, at the orifice, the static pressure is uniform throughout the section and equal to the pressure existing in the chamber into which the liquid is discharged, and the velocity of flow is parallel to the axis and uniform throughout.

Third, between the upstream section and orifice, there are no energy losses due to turbulence, viscosity, or skin friction.

The expression for the ideal rate of flow of a liquid through an orifice based on these conditions is obtained as follows:

Let

Q = ideal rate of discharge, pounds per second.
A = area of the section before the nozzle, square feet.
a = area of the orifice, square feet.
D = diameter of upstream section or tube, feet.
d = diameter of orifice, feet.
V_1 = velocity at A, feet per second.
V_2 = velocity at a, feet per second.
ρ_1 = density of liquid at A, pounds per cubic foot.
ρ_2 = density of liquid at a, pounds per cubic foot.
P_1 = static pressure at A, pounds per square foot.
P_2 = static pressure at a, pounds per square foot.
$n = A/a = \frac{D^2}{d^2}$.

For the liquids and the pressures used in these tests it may be assumed that $\rho_1 = \rho_2 = \rho$. The error introduced by this assumption in the calculations for the coefficient of discharge is less than 0.5 per cent for an injection pressure of 5,000 pounds per square inch.

Since the rate of flow at sections A and a is the same,

$$Q = AV_1\rho_1 = aV_2\rho_2, \tag{1}$$

from which

$$V_1 = \frac{aV_2\rho_2}{A\rho_1} = \frac{V_2}{n} \tag{2}$$

By hypothesis there is no energy loss between sections A and a. Therefore, equating the loss in potential energy between the two sections to the kinetic energy gained at the throat,

$$\frac{P_1 - P_2}{\rho} = \frac{V_2^2 - V_1^2}{2g} \tag{3}$$

Substituting (2) in (3),

$$\frac{P_1 - P_2}{\rho} = \frac{V_2^2 - \left(\frac{V_2}{n}\right)^2}{2g} = \frac{V_2^2(n^2-1)}{2gn^2}$$

and

$$V_2 = \left[(P_1 - P_2)\frac{2g}{\rho}\left(\frac{n^2}{n^2-1}\right)\right]^{1/2} \tag{4}$$

Substituting (4) in (1),

$$Q = a\rho\left[(P_1 - P_2)\left(\frac{2g}{\rho}\right)\left(\frac{n^2}{n^2-1}\right)\right]^{1/2} \tag{5}$$

This is the ideal rate of flow for a liquid. The actual rate of flow Q', is, by definition, Q multiplied by the coefficient of discharge, C, or

$$Q' = a\rho C\left[(P_1 - P_2)\left(\frac{2g}{\rho}\right)\left(\frac{n^2}{n^2-1}\right)\right]^{1/2} = Ca\left[2g\rho\left(\frac{P_1 - P_2}{1 - \frac{d^4}{D^4}}\right)\right]^{1/2} \tag{6}$$

and the coefficient of discharge,

$$C = \frac{Q'}{Q} = \frac{Q'}{a\left(2g\rho\,\frac{P_1 - P_2}{1 - \frac{d^4}{D^4}}\right)^{1/2}} \tag{7}$$

Dividing both numerator and denominator by ρ, equation (7) becomes

$$C = \frac{B}{a\left[\left(\frac{2g}{\rho}\right)\left(\frac{P_1 - P_2}{1 - \frac{d^4}{D^4}}\right)\right]^{1/2}} \tag{8}$$

where B is the actual rate of flow in cubic feet per second. When $\frac{d^4}{D^4}$ is small, this equation may be further modified to the form

$$C = \frac{B}{a\left[2g\left(\frac{P_1 - P_2}{\rho}\right)\right]^{1/2}} \tag{9}$$

If any or all of the conditions assumed in deriving the expression for the ideal rate of flow of a liquid through an orifice are not satisfied, the coefficient of discharge may be different from unity. For the fuel injection systems of oil engines where small orifice diameters and orifice lengths, high throat velocities, and high cylinder pressures are used, the conditions for an ideal state of flow are far from satisfied.

DISCUSSION OF FACTORS AFFECTING THE FLOW OF A LIQUID THROUGH AN ORIFICE

The most important properties of a liquid that affect its flow are its density and viscosity. These two properties, for a given liquid, normally give rise to three types of flow which succeed one another as the speed of the flow across the throat of an orifice increases. At low speeds the influence of viscosity on the flow is so large, as compared to that of the density, that the effect of the latter may be considered negligible. As the speed of the flow is increased, however, the kinetic energy and the accompanying inertia reactions of the liquid against acceleration, which are proportional to the density, increase as the square of the speed, whereas the viscosity effects increase directly as the speed. Hence, as the speed of the flow increases a point is reached beyond which the influence of viscosity becomes negligible as compared to the influence of density. It follows that there may be:

First, streamline or viscous flow which depends on the viscosity only and is proportional to the difference of pressure across the orifice.

Second, mixed streamline and turbulent flow which depends on both viscosity and density.

Third, turbulent flow which depends on the density alone and is proportional to the square root of the difference of pressure across the orifice.

Another factor affecting the flow is the diameter of the orifice. Reducing the diameter of the orifice, without changing the magnitude of the liquid properties and the rate of flow, increases the transverse gradients of speed to which the viscous forces are proportional. The effect on the flow and, therefore, on the coefficient of discharge, is the same as though the viscosity of the liquid was increased.

There are no other factors or properties of a liquid that affect the flow through an orifice to an extent that merits consideration in this discussion. The nature of flow, therefore, can be completely determined by the speed of flow, V, the diameter of the orifice, D, the viscosity of the liquid, μ, and density, ρ. Since the rate of flow depends on the relative magnitude of the viscous forces, in comparison to the inertia forces which are due to the density of the liquid, the last two factors can be considered as one, $\frac{\mu g}{\rho}=\nu$, which is the kinematic viscosity of the liquid. In this ratio the dimension of μ are pounds-second per foot,[2] and of ρ pounds per foot.[3]

It follows from the foregoing that there is some relation connecting the coefficient of discharge with the factors affecting the flow through an orifice, or

$$C=f\ (D,\ V,\ \nu) \tag{10}$$

The form of the functional symbol f depends on the particular geometrical shape of the orifice, and can be determined only by experiment for any one shape.

By the principles of dimensional homogeneity it is known that the coefficient, being a pure number, or dimensionless, must depend not on any one of the factors of equation (10) separately, but on a dimensionless product of these factors. The product DV/ν, better known as Reynolds Number, satisfies this requirement, so that

$$C=f\ (DV/\nu)=f\ (R) \tag{11}$$

Although nothing may be known as to the function f, much useful information can be obtained from even incomplete experimental data by the application of this equation. It may be noted that there is only one independent variable to be considered in equation (11) instead of three in equation (10). The results of experiments from a nozzle of any one geometrical shape with any liquid whatever, with any orifice diameter, or with any rate of flow, can be represented within the errors of observation by a single curve of C versus (DV/ν). When such a curve is obtained for any nozzle, to determine the coefficient of discharge for a nozzle of the same geometrical shape and the same flow conditions, it will only be necessary to compute the value of (VD/ν) for the particular conditions, and then obtain the coefficient from the curve.

Previous experiments by Hodgson (Reference 3) and others on the form of curve representing equation (11) for nozzles of one geometrical shape, gave curves of the form illustrated in Figure 28. A clear understanding concerning the effect of varying the factors V, D, and ν separately would suggest a similar curve. If, by reason of high kinematic viscosity, low discharge velocities or small diameters, or all of these combined, R falls below R_1, at which region the value of C/R becomes constant, the flow is streamline or laminar. In the absence of turbulence the coefficient depends for its value largely on the resistance of the walls and the internal dissipation of energy, which are proportional to the viscosity and virtually independent of the density. Hence, any changes in the viscosity would sensibly affect the coefficient. If by

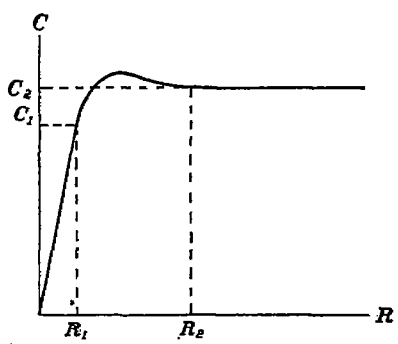

FIGURE 28

reason of higher velocity, lower kinematic viscosity or larger diameter, the value of R falls between R_1 and R_2, the flow is mixed turbulent and laminar. The coefficient now depends for its value not only on the internal dissipation of energy and friction of the walls, but also on the turbulence which is known to depend on the density. The nearer the value of R_2 is approached the higher the turbulence, and the less the coefficient depends on the viscosity. If R is above R_2, the flow may be termed turbulent. The coefficient then becomes virtually independent of viscosity and is practically constant. The type of flow that exists in practice in injection nozzles of high-speed compression-ignition engines is nearly always turbulent.

REFERENCES

1. Joachim, W. F.: An Investigation of the Coefficient of Discharge of Liquids through Small Round Orifices. N. A. C. A. Technical Report No. 224, 1926.
2. Kuehn, R.: Atomization of Liquid Fuels. Part II, Description of Apparatus; Fuels Tested; Atomization Experiments; Discharge Measurements; Atomization. (Translation from Der Motorwagen, October 10 and 20, November 30, 1924.) N. A. C. A. Technical Memorandum No. 330, 1925.
3. Hodgson, J. L.: The Orifice as a Basis of Flow Measurement. Transactions, Institution of Civil Engineers, Selected Engineering Paper No. 31, 1924.
4. ———: Fluid Meters, Their Theory and Applications. Reports of American Society of Mechanical Engineers Special Committee on Fluid Meters. Second Edition, 1927.
5. Bean, H. S., Buckingham, E., and Murphy, P. S.: Discharge Coefficients of Square-Edged Orifices for Measuring the Flow of Air. Bureau of Standards Journal of Research, Volume 2, March, 1929.
6. ———: Hydraulic Laboratory Practice. Edited by J. R. Freeman. Published by the American Society of Mechanical Engineers, 1929.
7. Gibson, A. H.: The Mechanical Properties of Fluids, a collective work, Applied Physics Series, 1923. Glasgow, Blackie and Sons, Ltd.
8. Hersey, M. D.: Viscosity of Diesel Engine Fuel Oil under Pressure. N. A. C. A. Technical Note No. 315, 1929.
9. Zucrow, M. F.: Flow Characteristics of Submerged Jets. Transactions, American Society of Mechanical Engineers, Applied Mechanics Division, 1929.

TABLE I

CRITICAL VELOCITIES OF FLOW

$$V_K = \frac{2{,}000\ ug}{ed}$$

Orifice diameter	Pressure difference	Corresponding ideal velocity	Critical velocity
Inches	*Lbs. per sq. in.*	*Ft. per sec.*	*Ft. per sec.*
0.008	200	187	222
.015	200	187	118
.020	200	187	89
.025	200	187	71
.040	200	187	45
.008	500	295	234
.015	500	295	125
.020	500	295	94
.025	500	295	75
.040	500	295	47
.008	1,000	418	247
.015	1,000	418	132
.020	1,000	418	99
.025	1,000	418	79
.040	1,000	418	50
.008	2,000	592	278
.015	2,000	592	148
.020	2,000	592	111
.025	2,000	592	89
.040	2,000	592	55
.008	3,000	725	316
.005	3,000	725	168
.020	3,000	725	126
.025	3,000	725	101
.040	3,000	725	63
.008	4,000	836	358
.015	4,000	836	191
.020	4,000	836	144
.025	4,000	836	115
.040	4,000	836	72
.008	5,000	934	413
.015	5,000	934	220
.020	5,000	934	165
.025	5,000	934	132
.040	5,000	934	83