NATIONAL ADVISORY COMMITTEE
FOR AERONAUTICS
FILED
FEB 17 1932
TO: Library L.M.A.L.

FEB 2 1932

TECHNICAL NOTES

NATIONAL ADVISORY COMMITTEE FOR AERONAUTICS

No. 407

EFFECT OF THE RESERVOIR VOLUME ON THE DISCHARGE PRESSURES IN THE INJECTION SYSTEM OF THE N.A.C.A. SPRAY PHOTOGRAPHY EQUIPMENT

By A. M. Rothrock and D. W. Lee
Langley Memorial Aeronautical Laboratory

FILE COPY
To be returned to
the files of the Langley
Memorial Aeronautical
Laboratory.

Washington
February, 1932

NASA Technical Library
3 1176 01425 5690

NATIONAL ADVISORY COMMITTEE FOR AERONAUTICS

TECHNICAL NOTE NO. 407

EFFECT OF THE RESERVOIR VOLUME ON THE DISCHARGE PRESSURES IN THE INJECTION SYSTEM OF THE N.A.C.A. SPRAY PHOTOGRAPHY EQUIPMENT

By A. M. Rothrock and D. W. Lee

SUMMARY

Tests were made to determine the effect of the reservoir volume on the discharge pressures in the injection system of the N.A.C.A. spray photography equipment. The data obtained are applicable to the design of a common-rail fuel-injection system. The data show that an injection system of the type described can be designed so that not more than full load fuel quantity can be injected into the engine cylinders, and so that the fuel spray characteristics remain constant over a large range of engine speeds. Formulas are presented for computing the volume of the reservoir and the diameter of the discharge orifice.

INTRODUCTION

Investigations are being conducted by the National Advisory Committee for Aeronautics at Langley Field, Va., to develop a fuel-injection system for high-speed compression-ignition engines which will give the same injection characteristics for a wide range of engine speeds. The requirements of such a system have been discussed in reference 1.

The tests are being conducted on the fuel-injection system of the N.A.C.A. spray photography equipment. (Reference 2.) This system is being used instead of one designed for engine operation because it is particularly adaptable to test work. The injection is caused by releasing fuel under pressure from a reservoir through an injection tube to a discharge orifice, mounted either in a plain holder or in an automatic injection valve. (Fig. 1.) The duration of injection is regulated by the time

interval between the opening of the timing valve and the opening of the by-pass valve. The operation of the system has been described in detail in reference 1.

The factors which have been investigated are: the effect of the injection-tube length on the rate of pressure rise at the timing valve after the opening of the valve (reference 3); the effect of the injection-tube length and diameter, and of the pressures in the injection system on the time lag between the opening of the timing valve and the appearance of the spray from the automatic injection valve (reference 4); and the effect of the injection-tube dimensions, the discharge-orifice area, the velocity of the opening of the timing valve, and the pressures in the injection system on the instantaneous pressures at the discharge orifice (reference 1). Some data were presented in reference 1 on the effect of the volume of the high-pressure reservoir on the instantaneous pressures at the discharge orifice. The present report contains the results of tests conducted to complete this investigation.

METHOD AND APPARATUS

The method of determining the movement of the injection valve stem (fig. 1) and from this movement computing the instantaneous pressures at the discharge orifice has been fully described in reference 1.

The conditions that were maintained constant during the present tests were:

Orifice diameter,	0.020 in.
Injection-tube length,	44 "
Injection-tube internal diameter,	0.12 "
Injection-tube external diameter,	0.25 "
Total length of tubing between high-pressure reservoir and discharge orifice,	58 "
Injection pressure,	3500 lb./sq.in.
Time interval of injection as regulated by the by-pass valve,	0.0047 sec.

The high-pressure reservoir was a cylinder with an outside diameter of 4 inches and an inside diameter of 2 inches. The volume of the reservoir was changed by plac-

ing 2-inch diameter cylinders inside the reservoir. The tube connecting the high-pressure reservoir to the timing valve was connected to the top of the reservoir instead of the bottom, as shown in Figure 1.

Tests were made with the by-pass valve operating, with the by-pass valve disconnected, and with the timing valve held open to determine the maximum discharge that could be obtained with each reservoir volume.

The tube connecting the timing valve to the hand pump was approximately 20 feet long. A hand-operated needle valve was mounted between the junction of this tube and the timing valve to determine the effect of the fuel under pressure in this tube on the instantaneous pressures at the dischrage orifice.

RESULTS AND DISCUSSION

Effect of reservoir volume.- Figure 3 shows the effect of the reservoir volume on the instantaneous pressures at the discharge orifice. It should be noticed in analyzing the curves that the injection valve-closing pressure (V.C.P.) was lower with the 3.2-cubic-inch reservoir than with the other volumes. The injection valve-closing pressure is defined as that pressure which, if acting on the whole of the stem area, would result in a hydraulic force equal to but oppositely directed to the force exerted by the injection-valve spring when the injection-valve stem is seated. The injection valve-closing pressure is equal to the injection valve-opening pressure multiplied by the ratio of the stem area presented to the hydraulic pressure before the injection valve opens to the stem area presented to the hydraulic pressure after the injection valve opens. For the valve tested, this was equivalent to approximately 0.7 times the opening pressure. The closing pressure was determined from the calibration records (reference 1) by extending the stem lift-pressure curve to zero stem lift. It could be determined more accurately than the opening pressure. Whether or not the pressure on the injection-valve stem was equal to the V.C.P. when cut-off occurred depended on the position and direction of movement of the stem when the by-pass valve opened.

The curves in Figure 3 show that the initial rate of pressure rise was practically independent of the reservoir

volume. The maximum pressures increased slightly as the volume was increased. The general shape of the curves for the first 0.003 second is the same, regardless of the reservoir volume. As was shown in reference 2, for volumes greater than 11 cubic inches, the injection pressures were independent of the reservoir volume. The total recorded injection period with the 4.7-cubic-inch reservoir, as will be shown later, was 0.0045 second; but the stem lift after the first 0.003 second was not sufficient to give efficient injection. Consequently, the instantaneous pressures were determined for only the first 0.0033 second. Restriction to flow between the injection-valve stem and the valve seat did not occur until cut-off in any of the tests, as the area between the stem and seat for a stem lift of 0.001 inch was equal to the discharge orifice area.

The 1.6-cubic-inch volume was sufficient for an injection period of 0.003 second. Since 0.003 second is approximately the allowable injection period for high-speed engine operation, it can be concluded that the 1.6-cubic-inch volume is sufficient for the reservoir under these test conditions. The total fuel quantity discharged, computed from the instantaneous pressures according to the method given in reference 2, was 0.00023 pound. Assuming 14.5 pounds of air required to burn 1 pound of fuel and complete combustion, the discharge was sufficient for an engine cylinder with a bore and stroke of 4.6 inches. It is seen, therefore, that the reservoir volume need not be excessive in comparison to the other dimensions of the engine, provided that the pressure in the reservoir is built up to the required injection pressure before the start of each injection.

The pressure difference between the injection pressure and injection valve-closing pressure for the test with the 1.6-cubic-inch common-rail volume was 1,475 pounds per square inch. The decrease in fuel volume for this pressure difference was $\frac{1475}{284000} \times 1.6$ cubic inches or 0.0083 cubic inch, in which 284,000 pounds per square inch is the bulk modulus of the fuel. (Reference 5.) This volume is equal to 0.00026 pound, since the density of the fuel was 0.0307 pound per cubic inch. This value compares favorably with the discharge of 0.00023 pound computed from the instantaneous pressures.

To compute the reservoir volume for any conditions, let

V = reservoir volume

W = weight of fuel for maximum load

P_m = pressure in reservoir at start of injection

P_c = closing pressure of injection valve

E = bulk modulus of fuel

γ = specific weight of fuel

Then

$$W = V \frac{P_m - P_c}{E} \times \gamma \qquad (1)$$

Solving for V

$$V = \frac{W E}{\gamma (P_m - P_c)} \qquad (2)$$

Care must be taken in using the equation to substitute the same units of mass and length for all the factors.

The total tube length of 58 inches between the common rail and the discharge orifice, according to reference 2, was sufficient for an injection period of 0.0029 second. Figure 3 shows that, had the cut-off been controlled by the by-pass valve and had it occurred at 0.0024 second after the start of injection, the cut-off of the fuel sprays with the 1.6, 3.2, and 4.7 cubic inch reservoirs would have been sharper and there would have been less tendency for after dribble.

With the 3.2-cubic-inch common rail, the fuel volume for discharge was $\frac{3500 - 1785}{284000} \times 3.2$ cubic inches or, expressed as a weight, 0.00052 pound. The discharge, computed from the instantaneous pressures, was 0.00024 pound. The difference in the two quantities was caused by the pressure-wave phenomena discussed in reference 2. The time required to discharge 0.00052 pound of fuel through a 0.020-inch orifice with a pressure head of 3,500 pounds per square inch is 0.0071 second, assuming a coefficient

of discharge of 0.94. (Reference 1.) Consequently, it can be concluded that the 0.020-inch orifice was too small for the 58-inch injection-tube length and the 3.2-cubic-inch common rail. To determine the orifice diameter to be used with the 3.2-cubic-inch volume, the orifice area necessary to discharge 0.00052 pound of fuel in 0.0024 second with a pressure head of 3,500 pounds per square inch is computed. Using the flow formula

$$W = \frac{\pi}{4} d^2 \; C \; t \sqrt{2 \; P \; g \; \gamma} \tag{3}$$

in which d is the orifice diameter, C the coefficient of discharge of the orifice, and t the time of discharge. Solving for d

$$d = \sqrt{\frac{4 \; W}{\pi \; C \; t \sqrt{2 \; P \; g \; \gamma}}} \tag{4}$$

Substituting the numerical values

$$d = \sqrt{\frac{4 \times 0.00052}{3.14 \times 0.94 \times 0.0024 \sqrt{2 \times 3500 \times 386 \times 0.0307}}}$$

$$= 0.032 \text{ inch.}$$

In the design of an injection system of the type described in this report, equation (2) is used for computing the volume of the reservoir, and equation (4) for computing the diameter of the discharge orifice. If a multiple-orifice nozzle is used, the sum of the areas of the orifices should be equivalent to that of a single orifice with the diameter given in equation (4), making suitable corrections for any variation in the coefficient of discharge. The data presented in reference 1 show that the length of the injection tube in inches should be twice the injection period in 0.0010 second and that the area of all passages between the common rail and the discharge orifice should be at least four times the area of the discharge orifice.

Effect of form of high-pressure reservoir.- To determine whether or not the high-pressure reservoir could consist of a long tube, a test was made in which a 94-inch tube with a volume of 1.1 cubic inches was used for the

high-pressure reservoir. The recorded movement of the injection-valve stem is shown in Figure 4. The total injection period is longer than was obtained with the 1.6-cubic-inch reservoir. The curve shows, however, that the instantaneous pressures were considerably lower than when the 1.6-cubic-inch volume of short length was used. Further tests would be necessary to determine the maximum permissible ratio between the length and the cross-sectional area of the high-pressure reservoir. The results do show that a safe rule to follow is that the linear dimensions of the high-pressure reservoir should all be of the same magnitude.

Effect of by-pass valve on the injection period.- The injection-valve stem records for the 4.7-cubic-inch reservoir with and without the by-pass valve operating are shown in Figure 5. The upper record shows that with the by-pass valve operating, the total injection period was approximately the same as that for the 11 and 20 cubic inch volumes. However, after the first 0.0033 second with the 4.7-cubic-inch reservoir, the stem lift was insufficient to give efficient injection. When the by-pass valve was disconnected, the injection was controlled by the time interval during which the timing valve was opened and was consequently longer than with the by-pass valve operating. With the 1.6 and 3.2 cubic inch reservoirs, as has been shown in Figure 3, the total injection period was independent of the by-pass valve setting, provided it was set for an injection period of greater than 0.0030 and 0.0034 second, respectively. Consequently, it can be concluded that with small reservoir volumes and individual pumps and reservoirs for each engine cylinder, the maximum fuel quantity which could be delivered to an engine employing the type of injection system described herein, could be limited to full load fuel quantity.

Effect of slow opening of the timing valve.- Reference 1 shows there was little variation in the instantaneous injection pressures for camshaft speeds of 470 to 1,100 r.p.m. In the present investigation, a test was made in which the timing valve was opened by giving the camshaft a partial turn by hand so that the timing valve remained open. The injection-valve stem lift record (fig. 6) shows that, although the instantaneous pressures were lower than when the cam was rotated by engaging the clutch, the stem was lifted clear of the seat until the pressure in the injection system dropped to the injection valve-closing

pressure. The record shows that at engine cranking speed satisfactory injection characteristics were maintained, and that an injection system of the type herein described should be satisfactory for operation over a wide speed range.

Effect of tube connecting timing valve to hand pump.- A comparison of the results presented in Figure 3 with those in reference 1 shows that the initial rate of pressure rise was slower in the present investigation. In the tests from which the data for Figure 3 were obtained, a hand-operated needle valve was placed between the timing valve and the tube connecting the timing valve to the hand pump. When this valve was removed, the injection-valve stem record showed the same rate of pressure rise (fig. 7) as presented in reference 1. It can be concluded that the higher rates of pressure rise presented in reference 1 were caused by the additional impulse given to the initial pressure wave by the fuel under pressure in the tube connecting the timing valve to the hand pump. When the valve between the timing valve and pump was inserted but left opened, some damping of the energy from the tube was noticed. When the valve was closed so that the injection was entirely controlled by the fuel under pressure in the reservoir, the injection-valve stem records and the instantaneous pressures were those given in Figure 3. (The bottom curve in Figure 7 is the same as the curve for the stem lift with the 11-cubic-inch reservoir volume shown in Figure 3.)

CONCLUSIONS

It can be concluded from the data presented that:

1. In an injection system of the type described, the reservoir can be made sufficiently small to prevent more than full load fuel quantity from being injected into the engine, and still give satisfactory injection characteristics over a large range of engine speeds.

2. The volume of the reservoir and the diameter of the discharge orifice can be computed from a knowledge of the fuel quantity to be discharged and the time of discharge.

3. The reservoir should be designed with linear dimensions of equal magnitude.

Langley Memorial Aeronautical Laboratory,
National Advisory Committee for Aeronautics,
Langley Field, Va., January 18, 1932.

REFERENCES

1. Rothrock, A. M.: Pressure Fluctuations in a Common-Rail Fuel Injection System. T.R. No. 363, N.A.C.A., 1930.

2. Beardsley, E. G.: The N.A.C.A. Photographic Apparatus for Studying Fuel Sprays from Oil Engine Injection Valves and Test Results from Several Researches. T.R. No. 274, N.A.C.A., 1927.

3. Gelalles, A. G., and Rothrock, A. M.: Experimental and Analytical Determination of the Motion of Hydraulically Operated Valve Stems in Oil Engine Injection Systems. T.R. No. 330, N.A.C.A., 1929.

4. Rothrock, A. M.: Injection Lags in a Common-Rail Fuel Injection System. T.N. No. 332, N.A.C.A., 1930.

5. Hersey, Mayo D.: Viscosity of Diesel Engine Fuel Oil Under Pressure. T.N. No. 315, N.A.C.A., 1929.

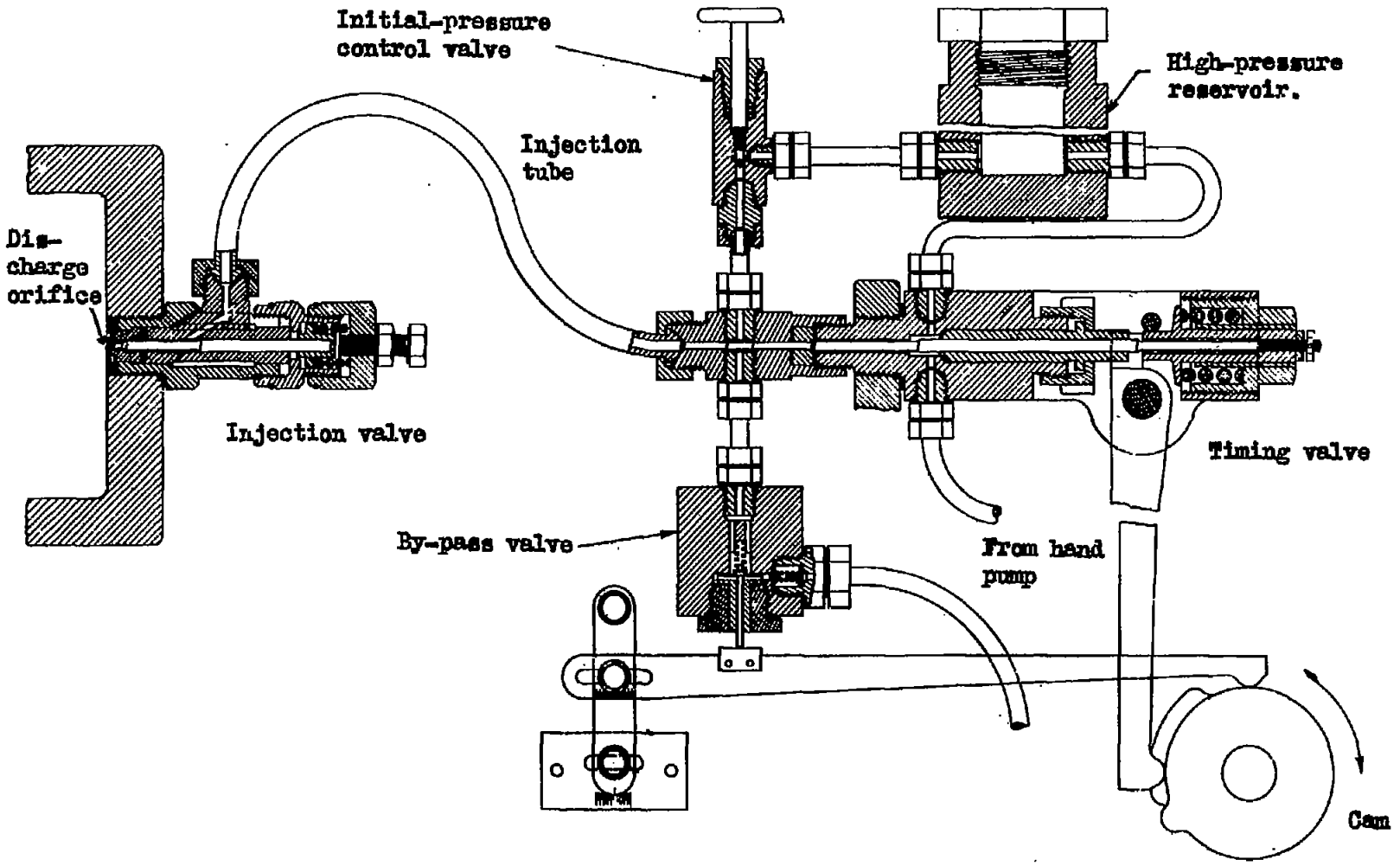

Fig.1 Fuel spray injection system.

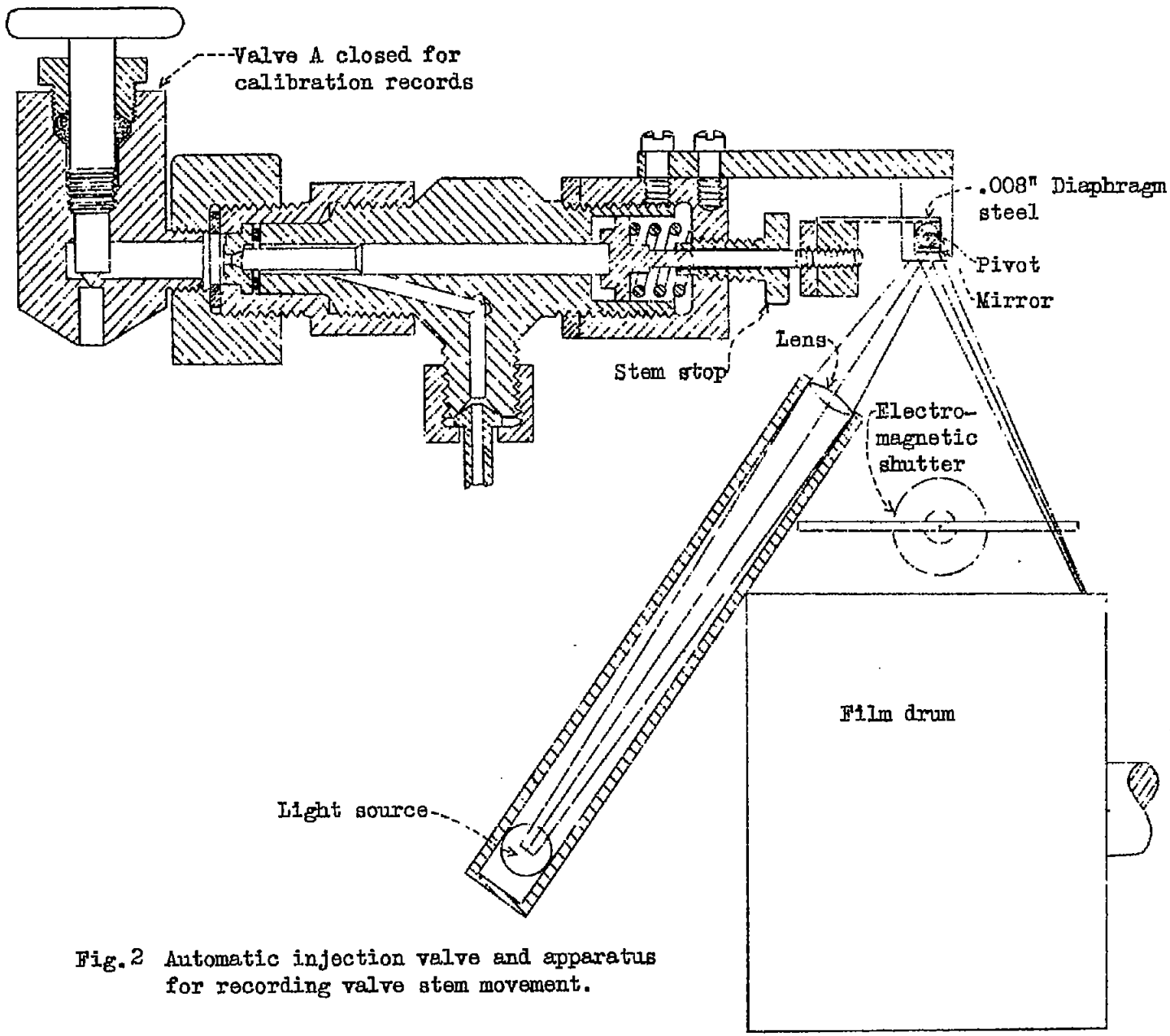

Fig. 2 Automatic injection valve and apparatus for recording valve stem movement.

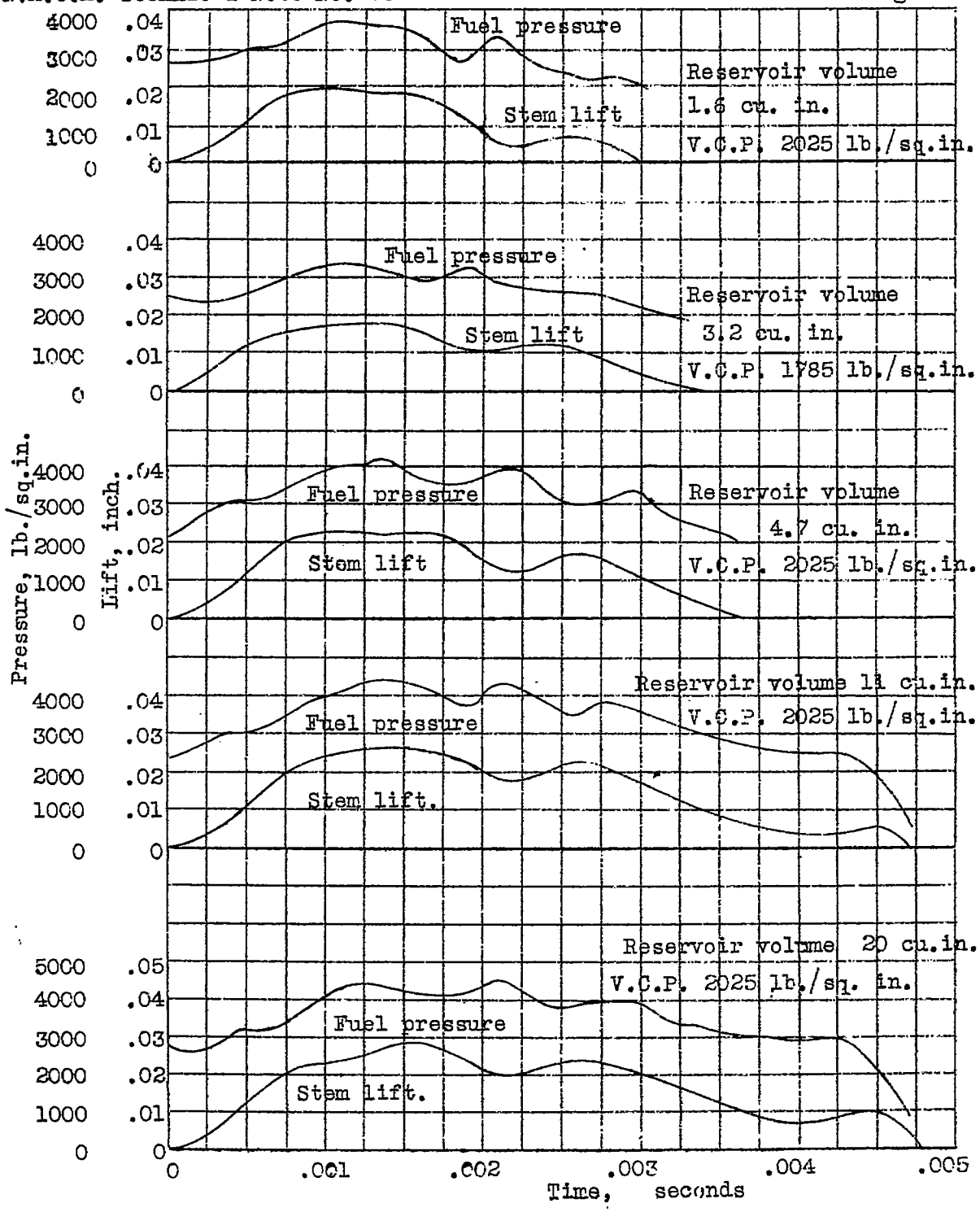

Discharge-orifice diameter	0.020 in.
Injection-tube length	44 in.
Initial pressure	300 lb./sq.in.
Injection pressure	3500 lb./sq.in.

Fig. 3 Effect of reservoir volume on stem lift and fuel pressure at the discharge orifice.

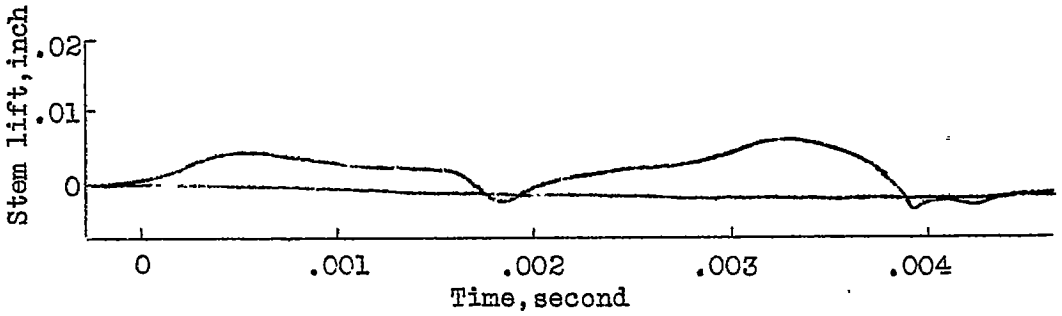

Reservoir, 94 in., tube, 1.1 cu. in.

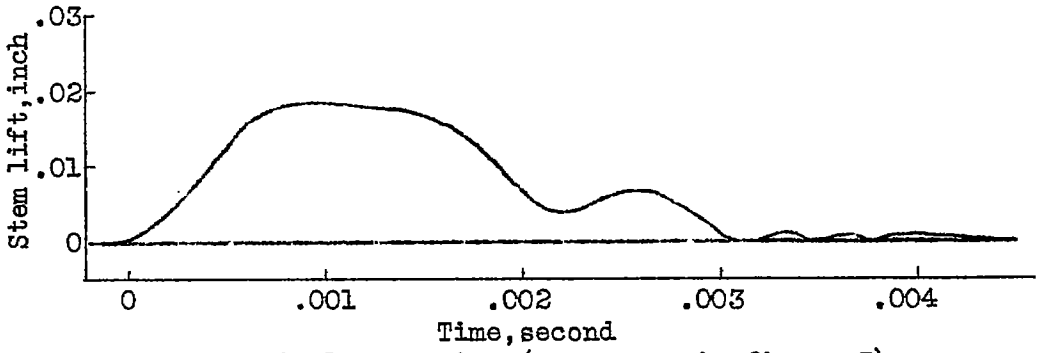

Reservoir, 1.6 cu. in. (see curve in figure 3)

Discharge-orifice diameter,	0.020 in.
Injection-tube length,	44 in.
Injection-valve closing pressure,	2025 lb./sq. in.
Injection pressure,	3500 " " "
Initial pressure,	300 " " "

Fig.4 Effect of shape of reservoir on injection-valve stem lift.

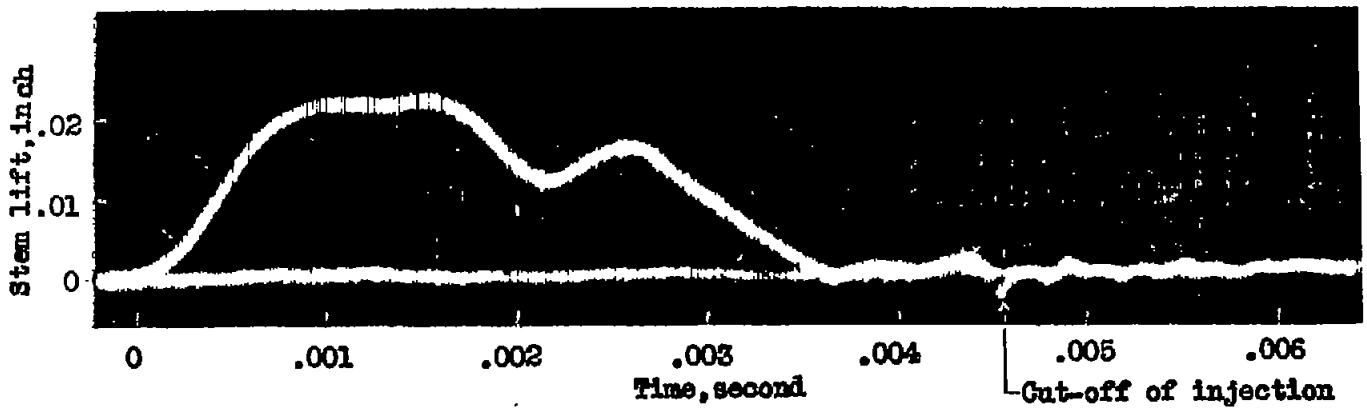

Stop of injection caused by opening of by-pass valve

Discharge-orifice diameter, 0.020 in.
Injection-valve closing pressure, 2025 lb./sq. in. Injection pressure, 3500 lb./sq. in.
Injection-tube length, 44 in. Initial pressure 300 lb./sq. in.

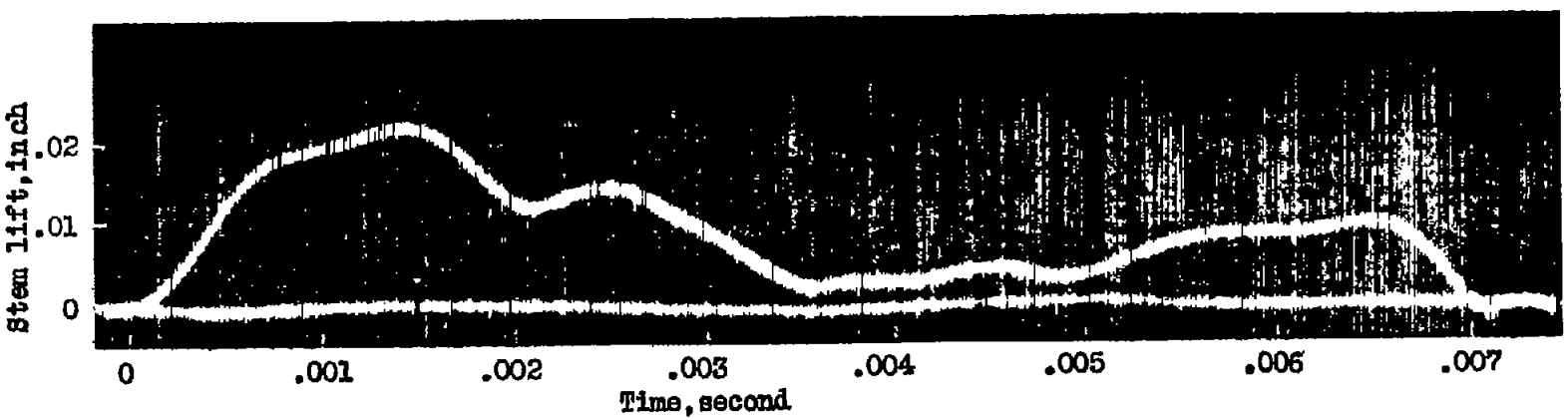

Stop of injection caused by closing of timing valve (by-pass valve disconnected)

Fig.5 Effect of by-pass valve on duration of injection with 4.7 cu. in. reservoir.

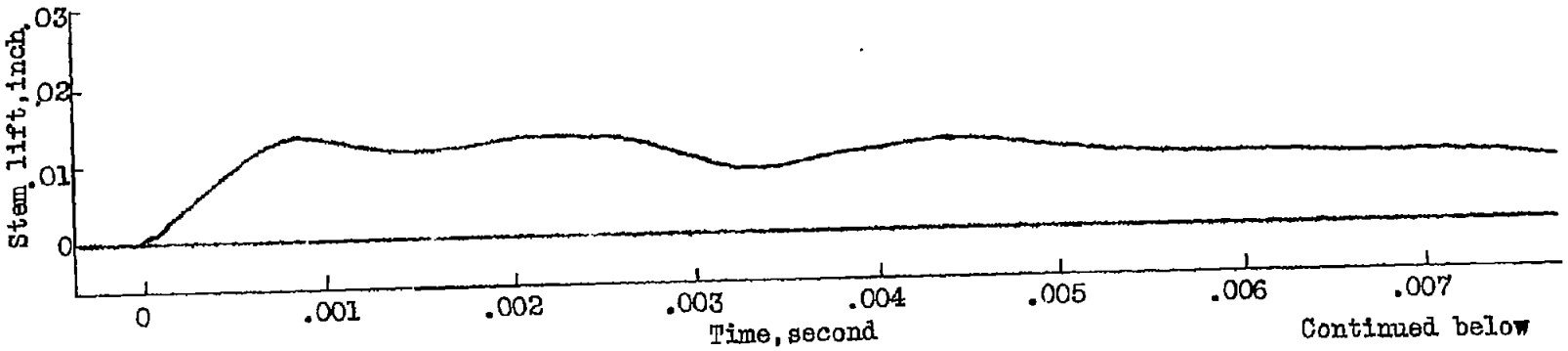

Continued below

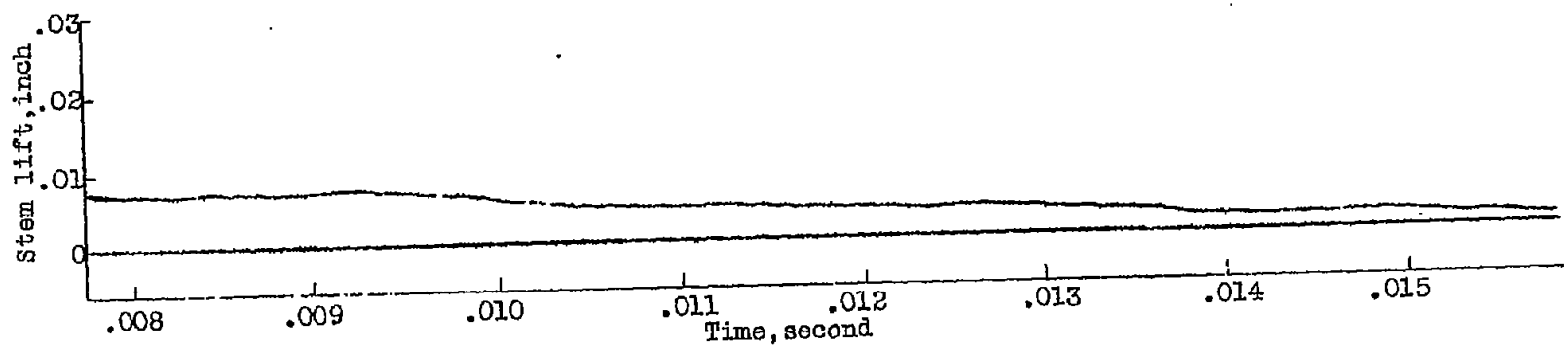

Reservoir volume,	4.7 cu. in.	Injection pressure,	3500 lb./sq. in.
Discharge-orifice diameter,	0.020 in.	Injection-tube length,	44 in.*
Injection-valve closing pressure,	2025 lb./sq. in.	*Total length,	58 in.
Initial pressure,	300 " " "		

Fig.6 Timing-valve cam operated by hand. Injection period controlled by fuel under pressure in reservoir.

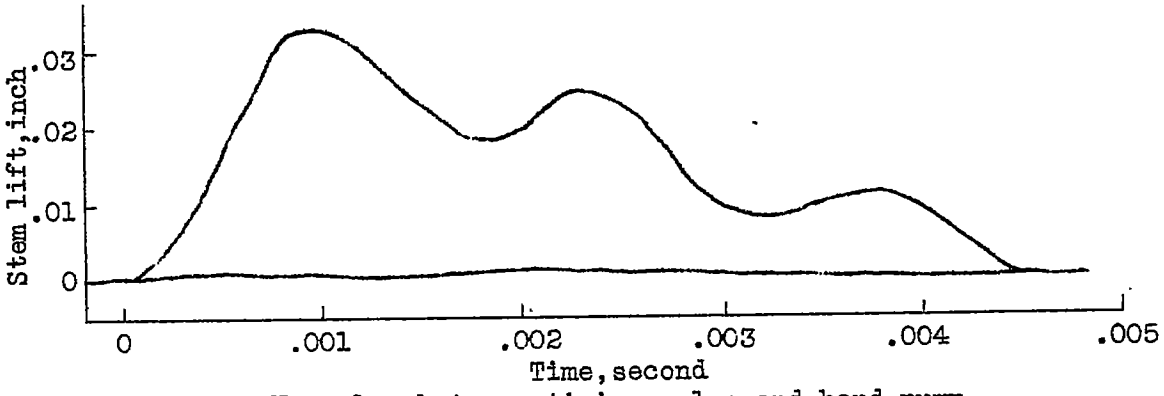

No valve between timing valve and hand pump

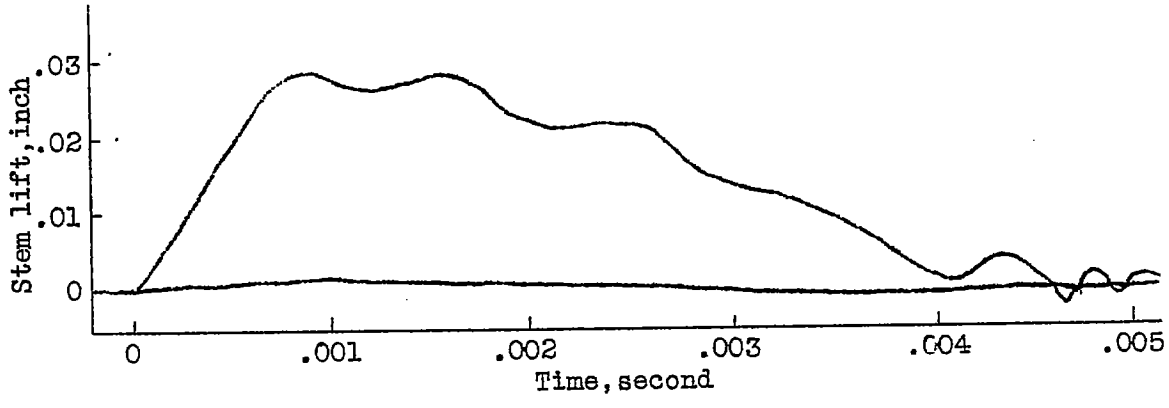

Needle valve between timing valve and tube to hand pump, valve opened.

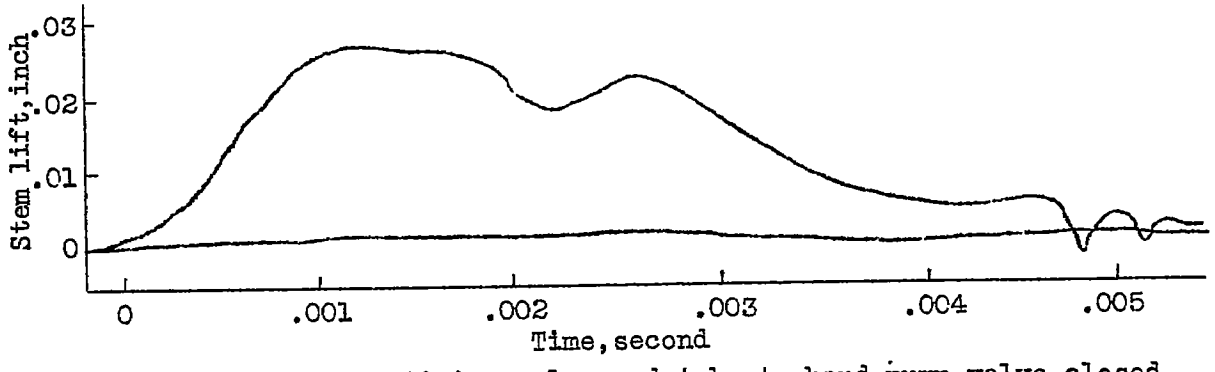

Needle valve between timing valve and tube to hand pump, valve closed.

11 cu. in reservoir	
Discharge-orifice diameter,	0.020 in.
Injection-tube length,	44 in.
Injection-valve closing pressure,	2025 lb./sq. in.
Initial pressure,	300 " " "
Injection pressure,	3500 " " "

Fig.7 Effect on injection-valve stem lift of fuel under pressure in tube connecting high-pressure hand pump to timing valve.