for Aeronautics
MAILED
FEB 14 1933
To: Library, L. M. A. L.

JAN 1 1933 [redacted]

TECHNICAL NOTES

NATIONAL ADVISORY COMMITTEE FOR AERONAUTICS

No. 445

WIND-TUNNEL RESEARCH COMPARING LATERAL CONTROL DEVICES, PARTICULARLY AT HIGH ANGLES OF ATTACK

VIII. STRAIGHT AND SKEWED AILERONS ON WINGS WITH ROUNDED TIPS

By Fred E. Weick and Joseph A. Shortal
Langley Memorial Aeronautical Laboratory

To be returned to
the files of the Langley
Memorial Aeronautical
Laboratory.

Washington
February, 1933

NASA Technical Library
3 1176 01433 1566

NATIONAL ADVISORY COMMITTEE FOR AERONAUTICS

TECHNICAL NOTE NO. 445

WIND-TUNNEL RESEARCH COMPARING LATERAL CONTROL DEVICES, PARTICULARLY AT HIGH ANGLES OF ATTACK

VIII. STRAIGHT AND SKEWED AILERONS ON WINGS WITH ROUNDED TIPS

By Fred E. Weick and Joseph A. Shortal

SUMMARY

This report is the eighth of a series of systematic tests in which various lateral control devices are compared with particular reference to their effectiveness at high angles of attack. The present tests were made with rounded tips; one rather blunt and only slightly rounded, and the other more slender with the curvature extending well in from the end of the wing. Medium-sized and short wide ailerons were tested on both wings, and in addition, skewed ailerons were tested on the wing having the more slender tip. The tests, which were made in the N.A.C.A. 7 by 10 foot wind tunnel, showed the effect of the ailerons and the tip shapes on the general performance of the wing, as well as on the lateral control and stability characteristics. The hinge moments were not measured but approximate values are given in the first report of the series.

It was found that the general performance of the wing with slightly rounded tips was somewhat poorer than that of a previously tested rectangular wing, but that the performance of the wing with tips having more extreme curvature was slightly better than that for a rectangular wing. Both of the aileron sizes tested on the wing with slightly rounded tips gave lower rolling moments at high angles of attack than the corresponding ailerons on rectangular wings. Reasonably satisfactory rolling moments at all angles of attack that can be maintained by average airplanes were given by all of the short wide ailerons tested with both tip shapes, and particularly by the short wide skewed ailerons on the wing having tips with extreme

curvature. In general, the yawing moments were somewhat smaller for the ailerons on the wings with rounded tips than for the corresponding ailerons on rectangular wings.

INTRODUCTION

A series of systematic wind-tunnel investigations, one of which is covered by this report, is being made by the National Advisory Committee for Aeronautics in order to compare various lateral control devices, particularly at high angles of attack. The various devices are given the same routine tests to show their relative merits in regard to lateral controllability and their effect on the lateral stability and on airplane performance. They are being tested first on rectangular Clark Y wings of aspect ratio 6, to be followed by wings with different plan forms and also with such variations as washout and sweepback which affect lateral stability.

Part I of this series (reference 1) deals with three different sizes of ordinary ailerons on rectangular wings. One of these ailerons was of a medium size taken from the average of a number of conventional airplanes, one was extremely short and wide, and the other was extremely long and narrow. All the ailerons were proportioned to give approximately equal controllability with equal up-and-down deflection at angles of attack below the stall. The results were analyzed to show the relative merits of the three sizes of ailerons when set in the above manner and also in accordance with two differential movements, and with upward movement only. The narrow-chord ailerons were found to be definitely inferior to those having medium and wide chords in regard to the rolling moments given at high angles of attack.*

This report covers similar tests of ordinary ailerons on wings with two representative forms of rounded tips. One of these is only slightly rounded, and the other is rounded more sharply, the curvature extending well in from the end of the wing. Since the narrow-chord ailerons gave poor control moments at high angles of attack on rectangular wings, they were not tested on the wings with rounded tips.

---

*Other work that has been done in this series is reported in Parts II to VII, inclusive, under reference 1.

Skewed ailerons had previously been shown to be undesirable on wings of rectangular plan form (reference 1, Part VI), so that the medium and short wide ailerons tested on the wing with only slightly rounded tips were made straight. On a wing having long curved tips, however, a skewed aileron would have a more uniform chord than a straight aileron and might be expected to give better results. Hence, the ailerons on this wing were tested with hinge axes skewed 10° and 20°. In addition the medium ailerons were tested with 0° skew. Each of the ailerons had the same span, area, and average chord as the ones of corresponding width tested on rectangular wings in Part I.

APPARATUS

Wind tunnel.- The N.A.C.A. 7 by 10 foot wind tunnel, which is being used throughout the entire investigation, has an open jet and a single closed return passage. The tunnel, together with the regular balance and associated apparatus, is described in detail in reference 2.

Models.- Inasmuch as previous tests (reference 1, Part I) had shown that the moments caused by both right and left ailerons could be found separately and added together to give the total effect of both with a satisfactory accuracy, the present tests were made with the right aileron only. Only two wing models were tested, one for each tip form. Each wing model had a removable portion in the right rear corner, as shown in Figures 1 and 2, a different model of this portion of the wing being made for each of the ailerons. The wing with the slightly rounded tips, designated tip No. 1, is shown with the different ailerons in Figure 1. The wing with the more slender tip having the curvature extending well in from the end is designated tip No. 2, and shown in Figure 2. Both of the wing models were constructed of laminated mahogany with a span of 60 inches and an aspect ratio of 6. The Clark Y airfoil section was used over the entire span except for a slight rounding at the extreme tip, the chords of all of the sections along the span were parallel, and the centers of the nose radii were all in one horizontal plane.

TESTS

The tests were conducted in accordance with the standard procedure, and at the dynamic pressure and Reynolds Number employed throughout the entire series of investigations on lateral control. (Reference 1.) The dynamic pressure was 16.37 pounds per square foot, corresponding to an air speed of 80 miles per hour at standard density, and the Reynolds Number was 609,000, based on the average chord.

Force tests were made at angles of attack up to 60° with the ailerons neutral and up to 40° with the right aileron deflected up or down various amounts. The tests were made at 0° yaw with all deflections and at 20° yaw in certain cases. Free-autorotation tests were made to determine the angle of attack above which autorotation was self-starting at 0° yaw with aileron neutral. Forced-rotation tests were also made in which the rolling moment while rolling was measured at the rotational velocity corresponding to $\frac{pr_b}{2V} = 0.05$, the highest rate likely to be caused by gusty air, and at angles of yaw both 0° and -20°.

Accuracy.- The accuracy of the results presented in this report is the same as that obtained in Part I. It is considered satisfactory for the purposes of the investigation at all angles of attack except in the burbled region between 20° and 25° where the rolling and yawing moments are relatively unreliable due to the critical, and often unsymmetrical, condition of the burbled air flow around the wing.

Aileron movements.- From tests with the single ailerons deflected upward and downward various amounts, data were obtained from which criterions were computed for four aileron movements; the equal up-and-down, average differential, extreme differential, and up-only movements. These movements were the same at those used in Part I. (Reference 1.) The relative up-and-down displacements with the two differential movements are given in Table I and the assumed linkages to obtain all of the movements in Figure 3. The deflection of the skewed ailerons was measured in a plane perpendicular to the hinge axis, and is slightly greater than the projected angle of deflection in a longitudinal plane.

TABLE I

SIMULTANEOUS AILERON DISPLACEMENTS

WITH ASSUMED DIFFERENTIAL ARRANGEMENTS

Average differential (No. 1)		Extreme differential (No. 2)	
Upward displacement	Downward displacement	Upward displacement	Downward displacement
Degrees	Degrees	Degrees	Degrees
0.0	0.0	0.0	0.0
10.0	8.5	10.0	7.0
20.0	13.0	20.0	12.0
30.0	15.0	30.0	14.0
35.0	15.0	40.0	11.5
		50.0	7.0

RESULTS

Coefficients.- The force-test results are given in the form of absolute coefficients of lift and drag and of the rolling and yawing moments:

$$C_L = \frac{\text{lift}}{q\ S}$$

$$C_D = \frac{\text{drag}}{q\ S}$$

$$C_l' = \frac{\text{rolling moment}}{q\ b\ S}$$

$$C_n' = \frac{\text{yawing moment}}{q\ b\ S}$$

where S is the total wing area, b is the wing span, and q is the dynamic pressure. The coefficients as given above are not corrected for tunnel-wall effect. They are obtained directly from the balance and refer to the wind (or tunnel) axes. In special cases in the discussion where the moments are used with reference to body axes,

the coefficients are not primed. Thus the symbols for the rolling and yawing moment coefficients about body axes are C_l and C_n.

The results of the forced-rotation tests are given, also about the wind axes, by a coefficient representing the rolling moment due to rolling:

$$C_\lambda = \frac{\lambda}{q\ b\ S}$$

where λ is the rolling moment measured while the wing is rolling, and the other factors have the usual significance. This coefficient may be used as a measure of the degree of lateral stability or instability of a wing under various rolling conditions. In the present case, it is used to indicate the characteristics of a wing when it is subjected to a rolling velocity equal to the maximum likely to be encountered in controlled flight in very gusty air. This rolling velocity may be expressed in terms of the wing span as

$$\frac{p'b}{2\ V} = 0.05$$

where V is the air speed at the center section of the wing, and p' is the angular velocity in roll about the wind axis.

Tables.- The results of the tests are given in Tables II to XVII. Table II gives values of C_L, C_D, C_l', and C_n' for all control deflections at 0° yaw for the wing with tip No. 1 and medium ailerons. Table III contains similar data for the same wing and aileron combination but with 20° yaw. Tables IV and V are similar to II and III but contain the data for the short wide ailerons on the same wing. Table VI contains the results of the rotation tests for the same wing. Similarly, Tables VII to XVII give the results for the wing with tip No. 2.

DISCUSSION IN TERMS OF CRITERIONS

For a comparison of the different lateral control arrangements, the results of the tests are discussed in terms of criterions, which are explained in detail in Part I and briefly in the following paragraphs. By use of these criterions a comparison of the effect of the different control devices on the general performance, the lateral controllability, and the lateral stability may be made. The values of the criterions summarizing the results of the present tests are given in Table XVIII, and the values for the standard and the short wide ailerons of Part I (rectangular wings) are included for comparison.

General Performance (Ailerons Neutral)

Wing area required for desired landing speed.- The value of the maximum lift coefficient is used as a criterion of the wing area required for the desired landing speed, or conversely, for the landing speed obtained with a given wing area. The maximum lift coefficient of the wing with tip No. 2 was about the same as those for the rectangular wings, but that for the wing with tip No. 1 was definitely lower.

Speed range.- The ratio C_{Lmax}/C_{Dmin} is a convenient figure of merit for comparison of the relative speed range obtained with various wings. The wing with tip No. 1 had a slightly lower minimum drag coefficient than the rectangular wings, and the speed-range ratio was about the same. The ratio for the wing with tip No. 2 was about 5 per cent higher.

Rate of climb.- In order to establish a suitable criterion for the effect of the wing and the lateral control devices on the rate of climb of an airplane, the performance curves of a number of types and sizes of airplanes were calculated, and the relation of the maximum rate of climb to the lift and drag curves was studied. This investigation showed that the L/D at $C_L = 0.70$ gave a consistently reliable figure of merit for this purpose. Rounding the tips of the wings had no appreciable effect on this criterion.

Lateral Controllability (Maximum Assumed Aileron Deflection).

Rolling criterion.- The rolling criterion upon which the control effectiveness of each of the aileron arrangements is judged is a figure of merit that is designed to be proportional to the initial acceleration of the wing tip that follows instantaneous deflection of the ailerons from neutral, regardless of the air speed or the plan form of the wing. Expressed in coefficient form, this rolling criterion is

$$RC = \frac{C_l \; S \; b^2}{12 \; C_L \; I_x}$$

where C_l is the coefficient of rolling moment due to the ailerons with respect to the body axis (which axis for the wing alone is taken as the midspan chord line), and I_x is the area moment of inertia of the wing about the midspan chord line. A more detailed explanation of the derivation of RC and the assumptions upon which it is based is given in Part I. (Reference 1.)

The numerical value of this criterion that is assumed to represent satisfactory control conditions is approximately 0.075, the value given by the standard ordinary ailerons with the assumed maximum deflection of $\pm 25^\circ$ at an angle of attack of 10°. (See Part I, reference 1.)

The comparison of the various ailerons and movements is given in Table XVIII for four representative angles of attack: 0°, 10°, 20°, and 30°. The 0° angle represents the high-speed attitude; $\alpha = 10^\circ$ represents the highest angle of attack at which entirely satisfactory control with ordinary ailerons is obtained; $\alpha = 20^\circ$ is the condition of greatest lateral instability and is probably about the greatest obtainable angle of attack in a steady glide with most present-day airplanes; and finally, $\alpha = 30^\circ$ is given only for a comparison with controls for possible future types of airplanes.

At $\alpha = 0^\circ$ all the ailerons gave values of RC greatly in excess of those considered necessary, the ailerons on wings with rounded tips giving higher values than the corresponding ailerons on rectangular wings.

At $\alpha = 10^\circ$ all the ailerons gave values of RC rea-

sonably close to the assumed satisfactory value with the exception of the short wide ailerons on the wing having tip No. 2. These ailerons, when given the extreme differential or the up-only movements, gave substantially higher values of RC at $\alpha = 10^\circ$. By the simple expedient of changing slightly the assumed maximum deflection any of these ailerons can be arranged to give the same maximum rolling moment at $\alpha = 10^\circ$, which will allow a more accurate comparison if desired.

At $\alpha = 20^\circ$ none of the medium ailerons gave satisfactory values of RC. In fact, the medium ailerons on both wings with rounded tips gave substantially lower values than the medium ailerons on the rectangular wing. The short wide ailerons on the wings with both forms of rounded tips, however, gave values with the extreme differential and the up-only movements which approximated the satisfactory value of 0.075. The highest value was obtained on the wing with tip No. 2 by the short wide ailerons having 10° skew and the up-only movement, this value being 5 per cent higher than the assumed satisfactory one.

At $\alpha = 30^\circ$ none of the ailerons gave satisfactory values of RC, most of them being less than one-third of the satisfactory value. The short wide ailerons with 20° skew on the wing with tip No. 2 gave values definitely better than the others, that for the up-only movement being 60 per cent of the assumed satisfactory value.

Lateral control with sideslip.- If a wing is yawed appreciably, a rolling moment is set up that tends to raise the forward tip. The magnitude of this rolling moment is always greater at very high angles of attack than the available rolling moment due to ordinary ailerons. The highest angle of attack at which the aileron can balance the rolling moment due to 20° yaw is tabulated for all the arrangements tested as a criterion of control with sideslip. As previously mentioned, 20° yaw represents the conditions in a fairly severe sideslip. The lateral control against the effect of 20° sideslip is maintained up to approximately the same angle of attack with all of the combinations tested.

Yawing moment due to ailerons.- The desirable yawing moment due to ailerons depends to some extent upon the type of airplane that is being considered. It is obvious that a yawing moment tending to retard the high wing when the airplane is banked is never desirable. For highly ma-

neuverable military or acrobatic machines complete independence of the controls as they affect turning moments about the various body axes is probably a desirable feature. On the other hand, at high angles of attack a yawing moment of the proper magnitude tending to retard the low wing would under certain circumstances be an appreciable aid to safe flying for large transport airplanes or for machines to be operated by relatively inexperienced pilots.

In general, the yawing moment coefficients, both adverse and favorable, were somewhat smaller with both wings having rounded tips than for corresponding ailerons on rectangular wings. One exception to this rule was found for all of the ailerons with equal up-and-down deflection at an angle of attack of 20°, or just above the stall. No serious adverse yawing moments were obtained for any of the ailerons with up-only movement, and reasonably small values were obtained with the differential movements. The yawing moments could be improved still further by rigging the ailerons to be up 10° when neutral and deflecting them from that position. (See Part III, reference 1.)

Lateral Stability (Ailerons Neutral)

Angle of attack above which autorotation is self-starting.- This criterion is a measure of the range of angles of attack above which autorotation will start from an initial condition of practically zero rate of rotation. For the wing with tip No. 2 this angle was the same as for the rectangular wings, but for that with tip No. 1 it was 2° lower.

Stability against rolling caused by gusts.- Test flights have shown that in severe gusts a rolling velocity such that $\frac{p'b}{2V} = 0.05$ may be obtained. Consequently, the rolling moment of a wing due to rolling at this value of $\frac{p'b}{2V}$ gives a measure of its stability characteristics in rough air. In the present case, the angle at which this rolling moment becomes zero is used as a more severe criterion than the previously mentioned angle at which autorotation is self-starting, to indicate the practical upper limit of the useful angle-of-attack range. With the wing at 0° yaw, this angle had values 1° lower in every

case than the self-starting values for free autorotation. With 20° yaw, this criterion was the same for the wing with tip No. 1 as for the previously tested rectangular wing, but it was 2° higher for the wing with tip No. 2.

The above criterion shows the critical range below which stability is such that any rolling is damped out, and above which instability exists. The last criterion, maximum C_λ, indicates the degree of this instability. With both 0° and 20° yaw both the wings with rounded tips had maximum values of C_λ which come within the range found for the various rectangular wings which have been tested. This range is fairly wide because the values depend in a very critical manner on the exact dimensions and shape of the airfoil and are affected by variations in shape which are well within the ordinary limits of accuracy of construction for wing models.

Control Force Required

The hinge moments were not measured in the present tests, but an approximate idea of control force required may be obtained by a comparison with the ailerons on rectangular wings on the assumption that the hinge moment varies as the square of the aileron chord. On the basis of such a comparison all of the ailerons on the wings with rounded tips would have hinge moments not greatly different from those of the ailerons of corresponding size on rectangular wings.

At the end of the investigation of various lateral control devices it is intended to test the best devices in more detail, especially in regard to control force required.

CONCLUSIONS

1. From a standpoint of general performance the wing with slightly rounded tip (No. 1) was found to be slightly inferior to the rectangular wing, but the wing with more extremely rounded tip (No. 2) was somewhat better than the rectangular.

2. Rolling moments due to the ailerons at high angles of attack were lower with the wing with tip No. 1

than for the corresponding ailerons on a rectangular wing.

3. Rolling moments due to the ailerons on the wing with long rounded tip (No. 2) were better than those for the rectangular wing with both sizes of ailerons tested when compared for optimum arrangements, the ailerons on the wing with rounded tips giving the best results when skewed 20°.

4. Reasonably satisfactory rolling moments at all angles of attack which can be maintained by average airplanes were given by all the short wide ailerons with the extreme differential and up-only movements on both of the wings with rounded tips.

5. In general, the yawing moments were somewhat smaller for the ailerons on the wings with rounded tips than for corresponding ailerons on rectangular wings.

6. The lateral stability factors tested were not appreciably different for the wings with rounded tips than for rectangular wings.

Langley Memorial Aeronautical Laboratory,
National Advisory Committee for Aeronautics,
Langley Field, Va., September 27, 1932.

REFERENCES

1. Wind-Tunnel Research Comparing Lateral Control Devices, Particularly at High Angles of Attack.

   I. Ordinary Ailerons on Rectangular Wings. T.R. No. 419, N.A.C.A., 1932, by Fred E. Weick and Carl J. Wenzinger.

   II. Slotted Ailerons and Frise Ailerons. T.R. No. 422, N.A.C.A., 1932, by Fred E. Weick and Richard W. Noyes.

   III. Ordinary Ailerons Rigged up 10° when Neutral. T.R. No. 423, N.A.C.A., 1932, by Fred E. Weick and Carl J. Wenzinger.

   IV. Floating Tip Ailerons on Rectangular Wings. T.R. No. 424, N.A.C.A., 1932, by Fred E. Weick and Thomas A. Harris.

   V. Spoilers and Ailerons on Rectangular Wings. T.R. No. 439, N.A.C.A., 1932, by Fred E. Weick and Joseph A. Shortal.

   VI. Skewed Ailerons on Rectangular Wings. T.R. No. 444, N.A.C.A., 1932, by Fred E. Weick and Thomas A. Harris.

   VII. Handley Page Tip and Full-Span Slots with Ailerons and Spoilers. T.N. No. 443, N.A.C.A., 1932, by Fred E. Weick and Carl J. Wenzinger.

2. Harris, Thomas A.: The 7 by 10 Foot Wind Tunnel of the National Advisory Committee for Aeronautics. T.R. No. 412, N.A.C.A., 1931.

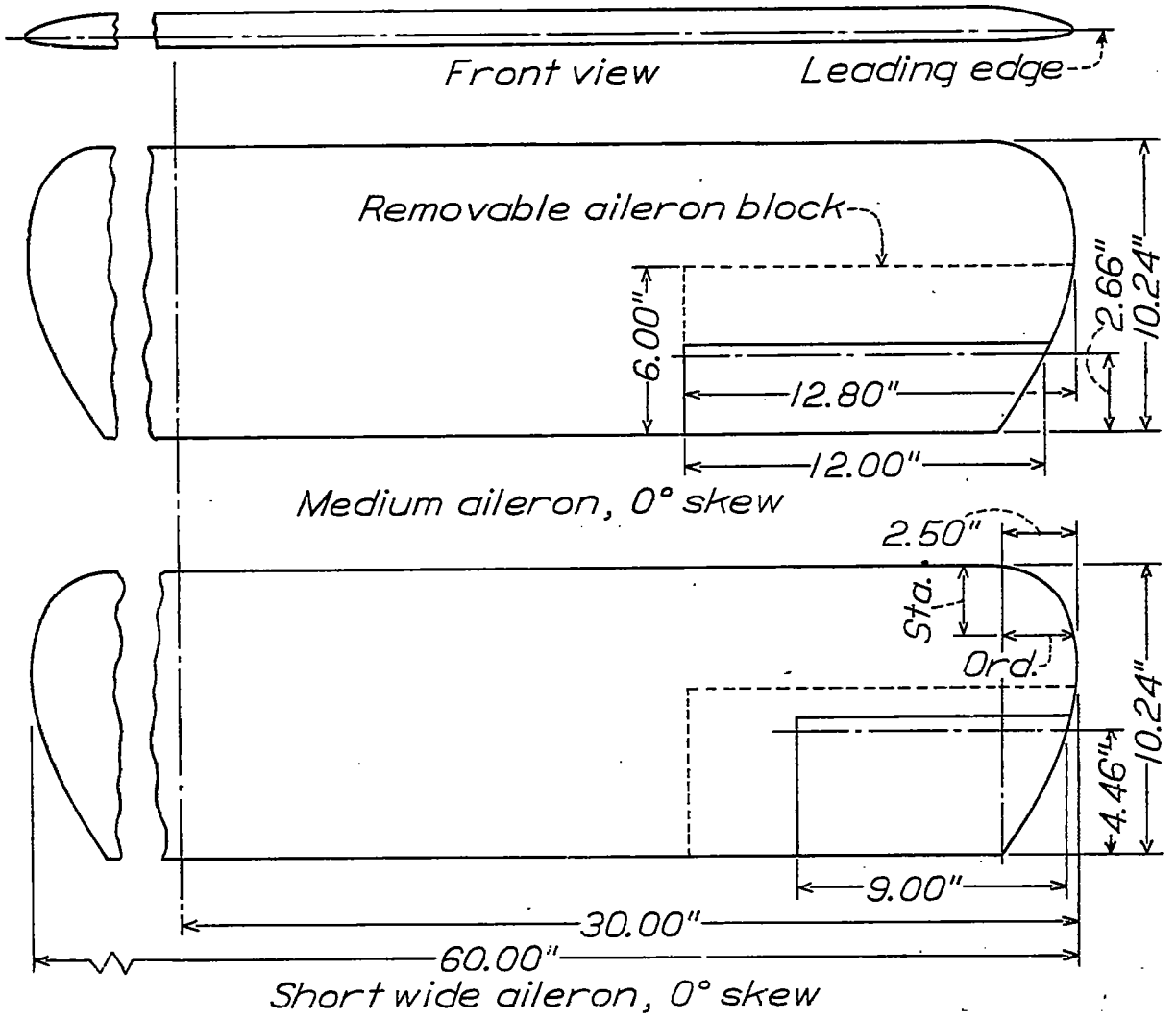

Tip plan form
(Stations and ordinates in inches)

Sta.	Ord.	Sta.	Ord.	Sta.	Ord.
0	0	1.50	2.14	7.00	1.84
.20	.90	2.00	2.32	8.00	1.38
.40	1.25	3.00	2.48	9.00	.83
.60	1.52	4.00	2.50	9.50	.52
.80	1.70	5.00	2.40	10.00	.17
1.00	1.85	6.00	2.16	10.24	0

Fig.1 Details of ailerons on Clark Y wing with tip No.1

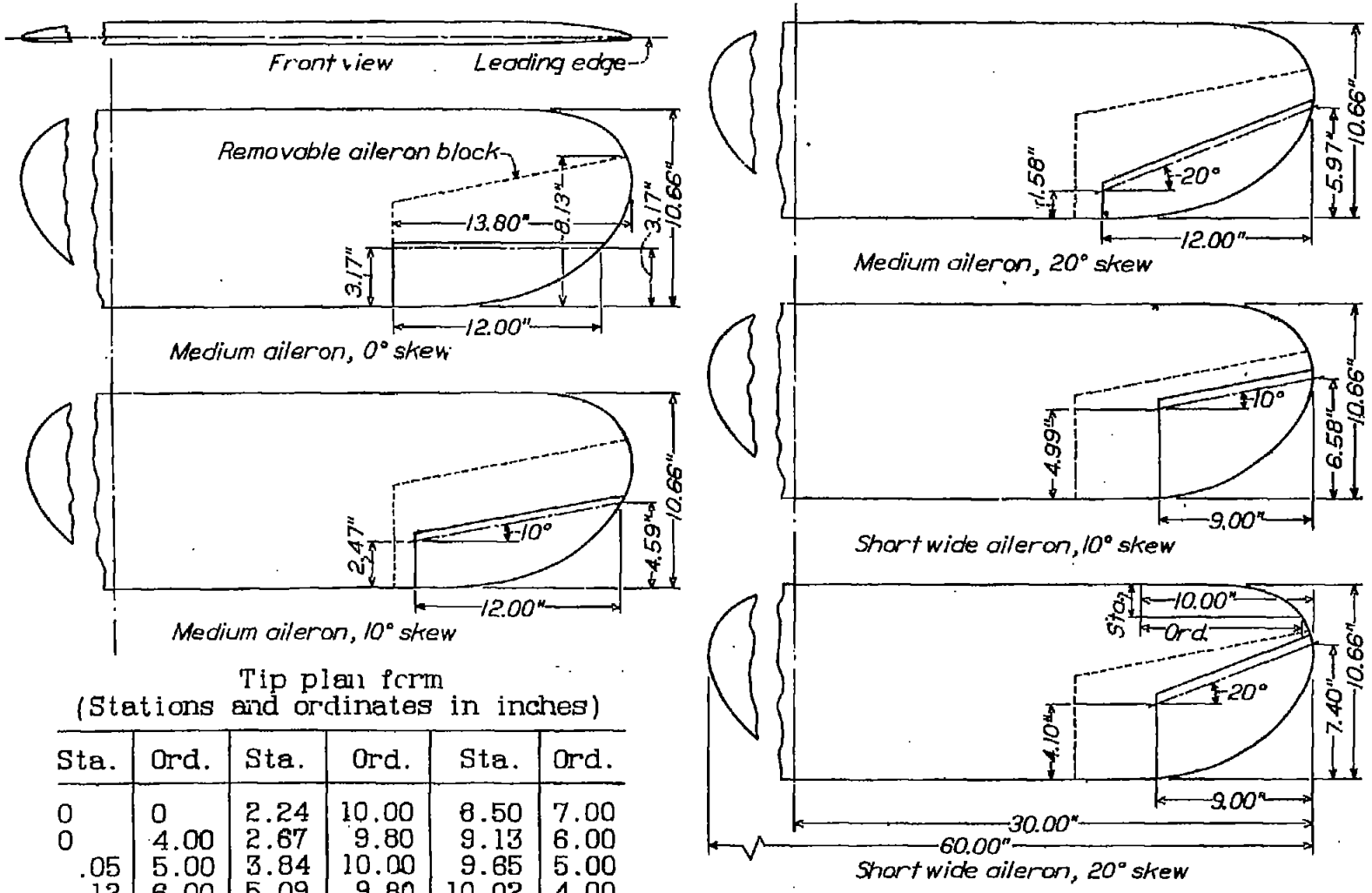

Tip plan form
(Stations and ordinates in inches)

Sta.	Ord.	Sta.	Ord.	Sta.	Ord.
0	0	2.24	10.00	8.50	7.00
0	4.00	2.67	9.80	9.13	6.00
.05	5.00	3.84	10.00	9.65	5.00
.12	6.00	5.09	9.80	10.02	4.00
.34	7.00	5.60	9.60	10.27	3.00
.75	8.00	6.61	9.00	10.44	2.00
1.46	9.00	7.71	8.00	10.57	1.00
				10.66	0

Figure 2.- Details of ailerons on Clark Y wing with tip No.2

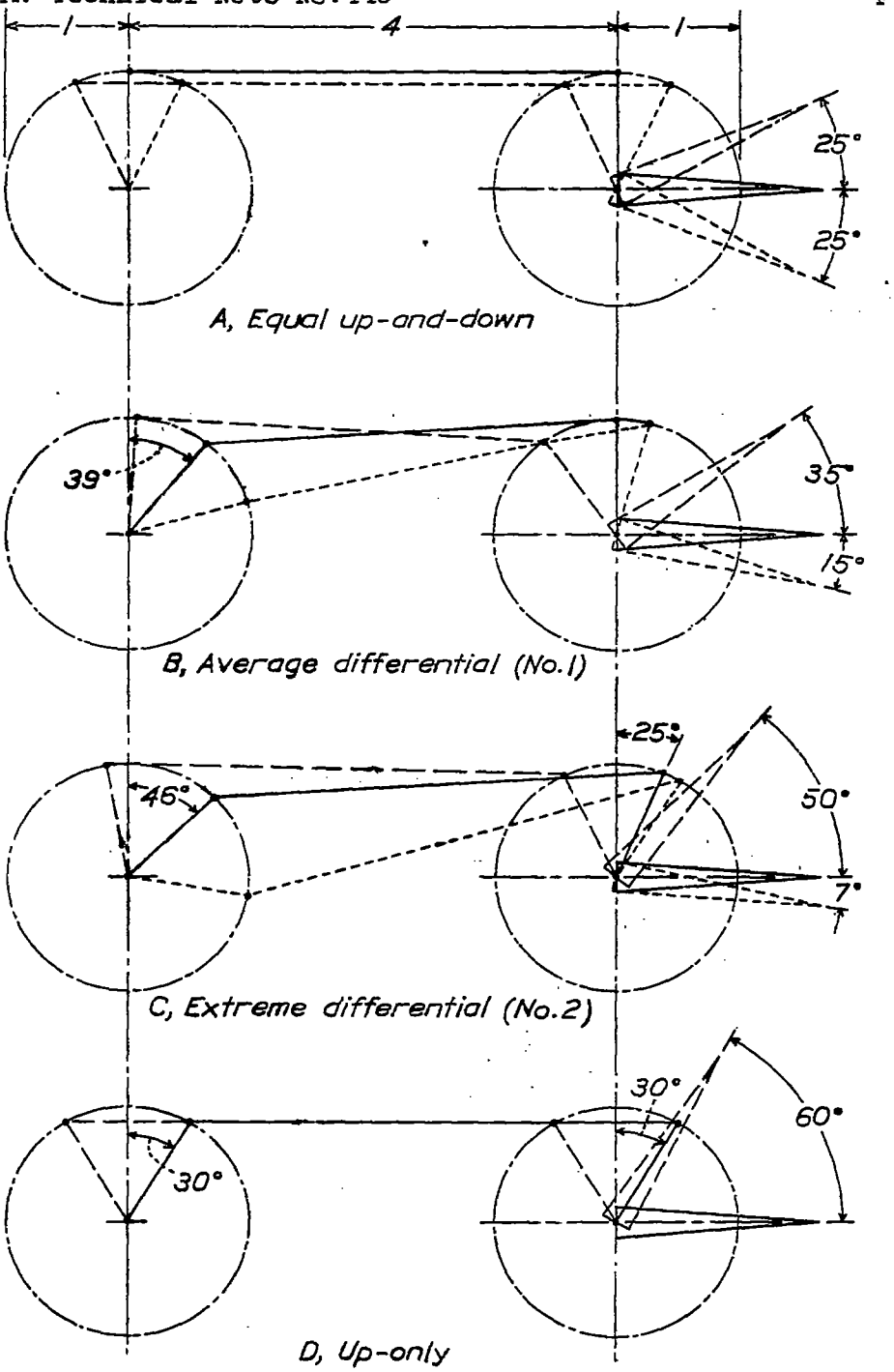

Figure 3. Aileron linkage systems - assumed maximum deflections.

TABLE II

FORCE TESTS. 10 INCH AVERAGE CHORD BY 60 INCH SPAN CLARK Y WING
WITH TIP NO. 1 AND MEDIUM AILERONS. 0° SKEW
R.N. = 609,000 Velocity = 80 m.p.h. Yaw = 0°

α		-5°	-4°	-3°	0°	5°	10°	12°	14°	15°	16°	18°	20°	22°	25°	30°	40°	50°	60°
	δ_A	Aileron neutral																	
C_L	0°	0.004	0.074	0.145	0.348	0.701	1.034	1.135	1.194	1.176	1.173	1.180	1.077	0.903	0.785	0.865	0.780	.700	0.597
C_D	0°	.016	.015	.016	.030	.045	.085	.104	.132	.149	.165	.200	.241	.354	.415	.545	.718	.874	1.039
		Right aileron up																	
C_l'	10°				0.017		0.017						-0.001			0.003	0.002		
C_n'	10°				-.001		-.003						-.004			-.003	-.004		
C_l'	20°				.031		.035						.010			.010	.007		
C_n'	20°				.001		-.004						-.009			-.006	-.007		
C_l'	25°				.038		.041		0.041		0.038	0.038	.017	0.011	0.009	.014	.011		
C_n'	25°				.002		-.003		-.006		-.008	-.010	-.011	-.008	-.005	-.008	-.009		
C_l'	30°				.043		.045						.031			.019	.014		
C_n'	30°				.004		-.002						-.010			-.008	-.010		
C_l'	35°				.048		.049		.047		.045	.043	.023	.016	.016	.022	.018		
C_n'	35°				.006		-.001		-.004		-.006	-.007	-.008	-.007	-.006	-.008	-.011		
C_l'	40°				.052		.055						.027			.023	.023		
C_n'	40°				.008		0						-.008			-.008	-.012		
C_l'	50°				.058		.062		.062		.058	.055	.034	.019	.008	.006	.010		
C_n'	50°				.011		.003		-.001		-.003	-.005	-.006	-.005	-.002	-.004	-.005		
C_l'	60°				.063		.069		.068		.065	.060	.039	.024	.007	-.001	.008		
C_n'	60°				.015		.005		.002		-.001	-.002	-.003	-.004	-.001	-.001	-.005		
		Right aileron down																	
C_l'	7°				-0.012		-0.009		-0.006		-0.007	-0.004	-0.004	0.002	-0.001	-0.001	-0.001		
C_n'	7°				.001		.003		.003		.003	.003	.003	.002	.003	.003	.003		
C_l'	8½°				-.013		-.010						-.004			0	0		
C_n'	8½°				.002		.003						.004			.003	.003		
C_l'	10°				-.015		-.012						-.004			-.001	-.001		
C_n'	10°				.003		.004						.004			.003	.004		
C_l'	11½°				-.017		-.015						-.004			-.001	-.001		
C_n'	11½°				.003		.005						.006			.004	.005		
C_l'	12°				-.017		-.015						-.003			0	0		
C_n'	12°				.003		.005						.005			.005	.005		
C_l'	13°				-.019		-.017						-.003			-.001	-.001		
C_n'	13°				.003		.006						.006			.005	.006		
C_l'	14°				-.020		-.019						-.003			0	-.001		
C_n'	14°				.004		.006						.006			.005	.006		
C_l'	15°				-.021		-.019		-.017		-.015	.005	-.003	.005	-.001	0	-.002		
C_n'	15°				.004		.007		.007		.007	.006	.006	.005	.005	.005	.007		
C_l'	20°				-.027		-.025						-.001			0	-.001		
C_n'	20°				.006		.009						.006			.007	.006		
C_l'	25°				-.031		-.029		-.028		-.025	.004	-.001	.006	0	0	0		
C_n'	25°				.007		.012		.014		.014	.013	.009	.008	.008	.009	.010		
C_l'	30°				-.038		-.033						.001			.001	.001		
C_n'	30°				.010		.016						.012			.011	.012		
C_l'	35°				-.040		-.036						.001			0	.002		
C_n'	35°				.012		.017						.013			.014	.013		

TABLE III

FORCE TESTS. 10 INCH AVERAGE CHORD BY 60 INCH SPAN CLARK Y WING
WITH TIP NO. 1 AND MEDIUM AILERONS. 0° SKEW
R.N. = 609,000 Velocity = 80 m.p.h. Yaw = ±20°

α		-5°	-3°	0°	5°	10°	12°	14°	16°	18°	20°	22°	25°	30°	40°	50°	60°		
	δ_A	Aileron neutral Yaw = -20°																	
C_L	0°	0.002	0.119	0.196	0.604	0.891	0.988	1.059	1.101	1.110	1.109	0.940	0.890	0.882	0.793	0.744	0.625		
C_D	0°	.016	.016	.018	.039	.072	.090	.107	.128	.164	.209	.328	.400	.509	.685	.883	1.029		
C_l'	0°	-.001	-.001	-.002	-.003	-.006	-.009	-.013	-.024	-.044	-.070	-.087	-.095	-.098	-.054	-.048	-.044		
C_n'	0°	.003	.001	.001	.002	.004	.006	.008	.011	.013	.016	.018	.036	.050	.043	.049	.054		
		Aileron neutral Yaw = +20°																	
C_L	0°	0.008	0.127	0.206	0.620	0.910	1.005	1.076	1.118	1.134	1.040	0.915	0.875	0.870	0.791	0.736	0.610		
C_D	0°	.015	.015	.019	.039	.073	.091	.106	.131	.189	.283	.339	.403	.504	.664	.854	1.019		
C_l'	0°	.002	.002	.002	.003	.006	.007	.014	.032	.059	.063	.091	.096	.067	.054	.048	.044		
C_n'	0°	-.003	-.001	-.001	-.002	-.004	-.006	-.007	-.011	-.012	-.017	-.026	-.039	-.051	-.048	-.047	-.055		
		Right aileron up Yaw = -20°																	
C_l'	25°			0.037		0.039		0.040	0.040	0.041	0.037	0.037	0.032	0.024	0.006				
C_n'	25°			.003		-.004		-.007	-.008	-.010	-.012	-.013	-.019	-.018	-.007				
C_l'	35°			.047		.052		.053	.053	.052	.050	.049	.044	.039	.011				
C_n'	35°			.006		-.003		-.005	-.007	-.009	-.011	-.014	-.021	-.023	-.008				
C_l'	50°			.053		.064		.067	.069	.070	.065	.057	.051	.042	.011				
C_n'	50°			.011		.003		-.001	-.003	-.006	-.008	-.012	-.020	-.021	-.007				
C_l'	60°			.059		.068		.073	.077	.078	.073	.064	.056	.048	.009				
C_n'	60°			.014		.004		0	-.002	-.004	-.006	-.013	-.018	-.021	-.008				
		Right aileron down Yaw = +20°																	
C_l'	7°			-0.009		-0.009		-0.007	-0.003	0	-0.002	0.005	0.001	0.002	-0.003				
C_n'	7°			.001		.003		.003	.003	0.002	.003	.006	.004	.003	.004				
C_l'	15°			-.019		-.017		-.015	-.009	-.006	-.002	.003	-.002	-.001	-.003				
C_n'	15°			.003		.006		.006	.006	.005	.006	.009	.007	.005	.006				
C_l'	25°			-.026		-.025		-.022	-.017	-.011	-.002	.001	-.004	0	-.003				
C_n'	25°			.007		.011		.011	.010	.010	.012	.013	.012	.009	.010				

TABLE IV

FORCE TESTS. 10 INCH AVERAGE CHORD BY 60 INCH SPAN CLARK Y WING
WITH TIP NO. 1 AND SHORT WIDE AILERONS. 0° SKEW
R.N. = 609,000 Velocity = 80 m.p.h. Yaw = 0°

α		-5°	-4°	-3°	0°	5°	10°	12°	14°	16°	18°	20°	22°	25°	30°	40°	50°	60°
	δ_A	Aileron neutral																
C_L	0°	0.001	0.070	0.137	0.344	0.702	1.031	1.140	1.199	1.178	1.153	1.074	0.803	0.787	0.855	0.775	0.702	0.590
C_D	0°	.016	.015	.015	.020	.045	.086	.106	.131	.166	.202	.241	.355	.413	.551	.703	.876	1.037
		Right aileron up																
C_l'	10°				0.018		0.019					0.009			0	0.002		
C_n'	10°				0		-.004					-.006			-.003	-.004		
C_l'	20°				.034		.037					.023			.004	.005		
C_n'	20°				.002		-.004					-.010			-.006	-.008		
C_l'	25°				.043		.046		0.044	0.043	0.037	.031	0.018	0.008	.007	.008		
C_n'	25°				.004		-.003		-.006	-.007	-.009	-.011	-.013	-.008	-.007	-.009		
C_l'	30°				.049		.053					.038			.011	.011		
C_n'	30°				.007		-.002					-.011			-.008	-.010		
C_l'	35°				.051		.063		.061	.060	.054	.046	.035	.020	.015	.015		
C_n'	35°				.010		.001		-.003	-.005	-.008	-.010	-.014	-.010	-.008	-.012		
C_l'	40°				.055		.074					.054			.016	.019		
C_n'	40°				.013		.005					-.007			-.008	-.013		
C_l'	50°				.060		.077		.061	.062	.060	.070	.054	.041	.018	.026		
C_n'	50°				.017		.010		.006	.003	.001	-.002	-.007	-.006	-.003	-.014		
C_l'	60°				.063		.079		.063	.063	.061	.069	.056	.044	.017	.024		
C_n'	60°				.021		.014		.010	.007	.005	.003	-.003	-.003	-.005	-.012		
		Right aileron down																
C_l'	7°				-0.012		-0.009		-0.009	-0.008	0.007	-0.001	0.003	0	-0.003	0		
C_n'	7°				.001		.003		.003	.004	.004	.003	.003	0.002	.003	.002		
C_l'	8½°				-.014		-.010					0			-.001	0		
C_n'	8½°				.002		.004					.004			.003	.003		
C_l'	10°				-.017		-.013					.001			-.001	0		
C_n'	10°				.003		.005					.005			.005	.004		
C_l'	11½°				-.018		-.015					.002			-.002	0		
C_n'	11½°				.002		.005					.005			.004	.004		
C_l'	12°				-.019		-.015					.001			-.001	0		
C_n'	12°				.003		.006					.005			.005	.005		
C_l'	13°				-.021		-.017					.001			0	0		
C_n'	13°				.004		.008					.007			.006	.007		
C_l'	14°				-.021		-.018					.001			0	0		
C_n'	14°				.004		.009					.006			.006	.007		
C_l'	15°				-.022		-.019		-.019	-.014	.004	0	.005	.001	0	0		
C_n'	15°				.005		.008		.010	.011	.009	.007	.006	.005	.008	.007		
C_l'	20°				-.026		-.024					.003			.003	.001		
C_n'	20°				.007		.012					.010			.008	.009		
C_l'	25°				-.030		-.029		-.027	-.020	.002	.002	.008	.003	.002	.003		
C_n'	25°				.010		.016		.019	.019	.017	.013	.011	.010	.010	.012		
C_l'	30°				-.033		-.034					.004			.004	.003		
C_n'	30°				.012		.020					.014			.012	.014		
C_l'	35°				-.036		-.033					.005			.006	.005		
C_n'	35°				.015		.022					.015			.014	.016		

TABLE V

FORCE TESTS. 10 INCH AVERAGE CHORD BY 60 INCH SPAN CLARK Y WING
WITH TIP NO. 1 AND SHORT WIDE AILERONS. 0° SKEW
R.N. = 609,000 Velocity = 80 m.p.h. Yaw = ±20°

α		-5°	-3°	0°	5°	10°	12°	14°	16°	18°	20°	22°	25°	30°	40°	50°	60°
	δ_A	Aileron neutral Yaw = -20°															
C_L	0°	0.001	0.122	0.302	0.613	0.909	1.003	1.072	1.088	1.104	1.097	0.928	0.888	0.878	0.815	0.741	0.621
C_D	0°	.016	.015	.019	.039	.074	.092	.106	.132	.171	.219	.345	.408	.513	.683	.866	1.037
C_l'	0°	-.002	-.003	-.001	-.003	-.006	-.009	-.014	-.029	-.054	-.078	-.093	-.098	-.091	-.055	-.049	-.045
C_n'	0°	.002	.002	.003	.002	.004	.006	.008	.011	.014	.018	.025	.038	.051	.048	.047	.056
		Aileron neutral Yaw = +20°															
C_L	0°	0.003	0.122	0.303	0.615	0.908	1.005	1.078	1.109	1.113	1.030	0.928	0.888	0.888	0.797	0.743	0.620
C_D	0°	.015	.014	.018	.038	.073	.090	.107	.132	.170	.289	.341	.408	.511	.684	.863	1.012
C_l'	0°	.002	.002	.002	.003	.006	.009	.015	.033	.059	.064	.094	.097	.090	.054	.048	.042
C_n'	0°	-.001	-.002	-.002	-.002	-.005	-.006	-.008	-.012	-.014	-.018	-.027	-.041	-.052	-.044	-.051	-.059
		Right aileron up Yaw = -20°															
C_l'	25°			0.038		0.037		0.038	0.041	0.048	0.044	0.043	0.035	0.024	0		
C_n'	25°			.004		-.003		-.006	-.007	-.010	-.013	-.019	-.022	-.024	-0.013		
C_l'	35°			.057		.054		.055	.056	.059	.060	.057	.051	.043	.009		
C_n'	35°			.012		0		-.004	-.006	-.010	-.013	-.021	-.025	-.030	-.019		
C_l'	50°			.065		.084		.086	.088	.090	.090	.084	.074	.065	.025		
C_n'	50°			.022		.014		.008	.005	0	-.005	-.018	-.022	-.031	-.023		
C_l'	60°			.060		.083		.105	.110	.113	.112	.105	.090	.080	.034		
C_n'	60°			.021		.019		.020	.016	.011	.005	-.009	-.015	-.026	-.016		
		Right aileron down Yaw = +20°															
C_l'	7°			-0.011		-0.010		-0.009	-0.007	-0.005	-0.003	0	-0.003	-0.001	-0.001		
C_n'	7°			.002		.003		.004	.005	.004	.005	0.003	.005	.004	.005		
C_l'	15°			-.022		-.021		-.019	-.016	-.012	-.005	0	-.005	-.003	-.001		
C_n'	15°			.005		.008		.010	.009	.008	.010	.007	.009	.007	.009		
C_l'	25°			-.031		-.030		-.028	-.023	-.017	-.007	-.002	-.006	-.002	-.001		
C_n'	25°			.011		.016		.018	.016	.013	.016	.013	.014	.012	.012		

TABLE VI

ROTATION TESTS. 10 INCH AVERAGE CHORD BY 60 INCH SPAN CLARK Y WING

WITH TIP NO. 1 AILERON GAP SEALED

R.N. = 609,000 Velocity = 80 m.p.h. Yaw = 0°, -20°

C_λ is given for forced rotation at $\frac{p'b}{2V} = 0.05$, (+) aiding rotation, (-) damping rotation

α		0°	11°	12°	15°	16°	18°	19°	20°	21°	22°	23°	24°	25°	27°	30°	35°	40°
		Aileron neutral Yaw = 0°																
(+) Rotation	C_λ	-0.022		-0.021	-0.006	-0.002	0.003	0.021	0.021	0.014	0.008			0.006	0.005	-0.001	-0.002	-0.002
(-) Rotation	C_λ	-.018		-.015	-.002	.005	.005	.030	.028	.020	.014			.012	.006	.002	.005	0
		Aileron neutral Yaw = -20°																
(+) Rotation	C_λ	-0.023	-0.032	-0.034		-0.054			-.071	-0.076	-0.083	-0.088	-0.090	-0.080	-0.086	-0.079	-0.059	-0.056
(-) Rotation	C_λ	-.012	-.001	.002		.031			.081	.083	.083	.084	.084	.084	.084	.080	.062	.049

TABLE VII

FORCE TESTS 10 INCH AVERAGE CHORD BY 60 INCH SPAN CLARK Y WING

WITH TIP NO. 2 AND MEDIUM AILERONS. 0° SKEW

R.N. = 609,000 Velocity = 80 m.p.h. Yaw = 0°

α	δ_A	-5°	-4°	-3°	0°	5°	10°	12°	14°	15°	16°	18°	20°	22°	25°	30°	40°	50°	60°
		Aileron neutral																	
C_L	0°		0.069	0.137	0.342	0.692	1.018	1.133	1.225	1.245	1.213	1.200	1.150	1.076	0.756	0.760	0.745	0.678	0.571
C_D	0°	.016	.015	.015	.019	.043	.083	.102	.124	.138	.157	.190	.239	.275	.397	.503	.678	.857	1.019
		Right aileron up																	
C_l'	10°				0.017		0.015						0.008			0.004	0.002		
C_n'	10°				0		-.003						-.005			-.003	-.004		
C_l'	20°				.032		.031						.019			.011	.006		
C_n'	20°				.001		-.004						-.006			-.006	-.007		
C_l'	25°				.038		.038		0.035	0.035	0.034	0.033 / .031	.022	.013	.005	.013	.010		
C_n'	25°				.003		-.003		-.005	-.005	-.006	-.007	-.008	-.009	-.004	-.007	-.009		
C_l'	30°				.041		.043						.028			.015	.014		
C_n'	30°				.004		-.002						-.009			-.007	-.010		
C_l'	35°				.044		.045		.044		.041	.037	.030	.024	.009	.017	.015		
C_n'	35°				.005		-.001		-.004		-.005	-.006	-.008	-.009	-.005	-.007	-.010		
C_l'	40°				.047		.050						.030			.016	.016		
C_n'	40°				.006		0						-.007			-.007	-.011		
C_l'	50°				.054		.060		.056		.055	.044	.040	.033	.004	.015	.017		
C_n'	50°				.010		.002		-.001		-.003	-.004	-.006	-.005	-.004	-.006	-.009		
C_l'	60°				.061		.067		.065		.060	.050	.045	.037	-.001	.004	.010		
C_n'	60°				.013		.005		.002		0	-.002	-.004	-.004	-.004	-.004	-.007		
		Right aileron down																	
C_l'	7°				-0.012		-0.010		-0.009		-0.006	-0.005	-0.003	0.001	-0.001	-0.001	-0.001		
C_n'	7°				.001		.002		.002		.002	.003	.003	.002	.003	.003	.002		
C_l'	8½°				-.015		-.012						-.004			-.001	-.001		
C_n'	8½°				.002		.003						.004			.003	.003		
C_l'	10°				-.015		-.014						-.002			-.001	-.002		
C_n'	10°				.003		.003						.004			.003	.004		
C_l'	11½°				-.018		-.016						-.003			-.001	-.002		
C_n'	11½°				.002		.004						.005			.004	.004		
C_l'	12°				-.019		-.017						-.002			-.002	-.001		
C_n'	12°				.002		.004						.005			.004	.004		
C_l'	13°				-.021		-.018						-.003			-.002	-.002		
C_n'	13°				.003		.005						.005			.005	.004		
C_l'	14°				-.021		-.019						-.002			-.001	-.001		
C_n'	14°				.003		.005						.005			.005	.005		
C_l'	15°				-.022		-.019		-.017		-.013	-.009	-.001	.004	-.001	0	-.002		
C_n'	15°				.004		.006		.006		.006	.006	.006	.004	.004	.005	.006		
C_l'	20°				-.026		-.022						.001			0	-.001		
C_n'	20°				.005		.007						.007			.006	.007		
C_l'	25°				-.028		-.027		-.021		-.018	-.009	.005	.007	-.001	.001	0		
C_n'	25°				.007		.010		.010		.011	.010	.009	.007	.007	.008	.009		
C_l'	30°				-.031		-.029						-.010			0	0		
C_n'	30°				.008		.012						.010			.010	.011		
C_l'	35°				-.034		-.030						.006			-.001	.001		
C_n'	35°				.010		.013						.011			.012	.012		

TABLE VIII

FORCE TESTS. 10 INCH AVERAGE CHORD BY 60 INCH SPAN CLARK Y WING
WITH TIP NO. 2 AND MEDIUM AILERONS. 0° SKEW.
R.N. = 609,000 Velocity = 80 m.p.h. Yaw = ±20°

α		-5°	-3°	0°	5°	10°	12°	14°	16°	18°	20°	22°	25°	30°	40°	50°	60°		
	δ_A	Aileron neutral Yaw = -20°																	
C_L	0°	0	0.118	0.295	0.606	0.890	0.983	1.069	1.120	1.128	1.127	0.935	0.883	0.863	0.780	0.740	0.612		
C_D	0°	0.016	.014	.018	.038	.070	.086	.105	.144	.153	.200	.326	.396	.496	.659	.863	1.022		
C_l'	0°	0	.001	.001	.001	-.001	-.003	-.007	-.018	-.041	-.061	-.084	-.097	-.085	-.050	-.046	-.041		
C_n'	0°	.002	.002	.002	.002	.004	.005	.007	.009	.012	.014	.018	.033	.045	.038	.042	.052		
		Aileron neutral Yaw = +20°																	
C_L	0°	0.008	0.125	0.305	0.612	0.903	0.998	1.085	1.140	1.156	1.155	0.955	0.878	0.860	0.790	0.745	0.610		
C_D	0°	.015	.014	.018	.038	.072	.088	.107	.137	.159	.212	.339	.401	.501	.668	.885	1.022		
C_l'	0°	-.001	-.001	-.002	-.002	-.002	0	.003	.015	.037	.065	.081	.068	.064	.051	.045	.040		
C_n'	0°	-.002	-.002	-.002	-.003	-.005	-.006	-.007	-.009	-.011	-.013	-.017	-.034	-.046	-.041	-.046	-.053		
		Right aileron up Yaw = -20°																	
C_l'	25°			0.036		0.036		0.036	0.038	0.036 0.039	0.039	0.035	0.028	0.024	0.007				
C_n'	25°			.002		-.003		-.006	-.008	-.007	-.010	-.016	-.019	-.016	-.006				
C_l'	35°			.046		.048		.047	.050	.051	.050	.054	.038	.024	.015				
C_n'	35°			.006		-.001		-.004	-.005	-.007	-.009	-.013	-.022	-.019	-.009				
C_l'	50°			.052		.062		.065	.068	.071	.068	.068	.050	.032	.010				
C_n'	50°			.010		.004		0	-.002	-.004	-.006	-.010	-.021	-.018	-.008				
C_l'	60°			.057		.065		.070	.076	.081	.077	.078	.053	.039	.002				
C_n'	60°			.013		.006		.003	.001	-.001	-.003	-.006	-.018	-.017	-.008				
		Right aileron down Yaw = +20°																	
C_l'	7°			-0.010		-0.009		-0.007	-0.006	-0.005	-0.003	0.002	-0.004	-0.003	-0.002				
C_n'	7°			.002		.003		.003	.002	.003	.002	.002	.004	.003	.005				
C_l'	15°			-.020		-.016		-.015	-.014	-.011	-.008	.002	-.006	-.005	-.004				
C_n'	15°			.004		.006		.007	.005	.005	.005	.005	.008	.006	.008				
C_l'	25°			-.025		-.020		-.021	-.020	-.017	-.012	.002	-.006	-.004	-.003				
C_n'	25°			.006		.010		.010	.010	.011	.009	.010	.014	.010	.011				

TABLE IX

FORCE TESTS. 10 INCH AVERAGE CHORD BY 60 INCH SPAN CLARK Y WING
WITH TIP NO. 2 AND MEDIUM AILERONS. 10° SKEW.
R.N. = 609,000 Velocity = 80 m.p.h. Yaw = 0°

α		-5°	-4°	-3°	0°	8°	10°	12°	14°	16°	18°	18°	20°	22°	25°	30°	40°	50°	60°
	δ_A	Aileron neutral																	
C_L	0°	-0.011	0.058	0.122	0.332	0.688	1.018	1.128	1.220	1.240	1.221	1.212	1.141	1.081	0.758	0.808	0.748	0.700	0.580
C_D	0°	.018	.015	.015	.020	.044	.083	.102	.123	.137	.155	.189	.234	.376	.396	.503	.671	.885	1.022
		Right aileron up																	
C_l'	10°				0.018		0.016						0.010			0.004	0.003		
C_n'	10°				-.001		-.003						-.005			-.002	-.004		
C_l'	20°				.030		.031						.023			.010	.007		
C_n'	20°				.001		-.004						-.008			-.006	-.007		
C_l'	25°				.037		.038		0.038		0.037	0.034	.028	0.019	0.003	.015	.011		
C_n'	25°				.003		-.003		-.005		-.006	-.007	-.009	-.010	-.004	-.007	.009		
C_l'	30°				.041		.043						.032			.018	.015		
C_n'	30°				.004		-.002						-.009			-.007	-.010		
C_l'	35°				.045		.048		.048		.044	.039	.031	.023	.007	.017	.016		
C_n'	35°				.006		-.001		-.003		-.005	-.006	-.008	-.009	-.005	-.008	-.010		
C_l'	40°				.047		.051						.033			.018	.017		
C_n'	40°				.007		0						-.007			-.006	-.010		
C_l'	50°				.054		.060		.059		.055	.044	.041	.030	-.001	.002	.008		
C_n'	50°				.010		.003		-.001		-.002	-.004	-.005	-.004	-.001	-.002	-.005		
C_l'	60°				.060		.066		.067		.063	.051	.048	.034	.001	0	.007		
C_n'	60°				.013		.005		.002		0	-.002	-.003	-.002	-.001	-.002	-.005		
		Right aileron down																	
C_l'	7°				-0.012		-0.011		-0.011		-0.009	-0.007	-0.004	-0.001	-0.001	0	-0.002		
C_n'	7°				.001		.003		.004		.004	.004	.004	.003	.002	0.003	.003		
C_l'	8½°				-.013		-.012						-.004			0	-.002		
C_n'	8½°				.001		.003						.005			.003	.004		
C_l'	10°				-.016		-.015						-.005			0	-.002		
C_n'	10°				.002		.004						.006			.003	.004		
C_l'	11½°				-.019		-.017						-.005			0	-.002		
C_n'	11½°				.003		.005						.007			.004	.005		
C_l'	12°				-.020		-.018						-.005			0	-.002		
C_n'	12°				.003		.005						.006			.005	.005		
C_l'	13°				-.022		-.019						-.005			-.001	-.003		
C_n'	13°				.003		.006						.007			.005	.006		
C_l'	14°				-.023		-.021						-.006			-.001	-.002		
C_n'	14°				.004		.006						.007			.005	.006		
C_l'	15°				-.025		-.021		-.018		-.016	-.012	-.005	0	-.001	0	-.002		
C_n'	15°				.004		.007		.006		.006	.006	.006	.006	.004	.005	.006		
C_l'	20°				-.030		-.026						-.004			0	-.002		
C_n'	20°				.006		.009						.010			.006	.009		
C_l'	25°				-.032		-.028		-.022		-.020	-.013	.002	.004	.001	.003	-.002		
C_n'	25°				.007		.011		.012		.012	.012	.011	.009	.007	.006	.010		
C_l'	30°				-.033		-.030						.004			.003	-.001		
C_n'	30°				.009		.014						.013			.010	.013		
C_l'	35°				-.035		-.032						.005			.003	.001		
C_n'	35°				.011		.017						.015			.013	.014		

TABLE X

FORCE TESTS. 10 INCH AVERAGE CHORD BY 60 INCH SPAN CLARK Y WING
WITH TIP NO. 2 AND MEDIUM AILERONS. 10° SKEW
R.N. = 609,000 Velocity = 80 m.p.h. Yaw = ±20°

α		-5°	-3°	0°	5°	10°	12°	14°	16°	18°	20°	22°	25°	30°	40°	50°	60°		
	δ_A	Aileron neutral Yaw = -20°																	
C_L	0°	-0.011	0.112	0.288	0.599	0.888	0.985	1.061	1.115	1.142	1.132	0.960	0.900	0.857	0.794	0.740	0.618		
C_D	0°	.016	.015	.018	.038	.072	.089	.104	.124	.154	.202	.222	.391	.498	.655	.862	1.030		
C_l'	0°	-.001	0	0	0	-.002	-.004	-.007	-.018	-.043	-.080	-.086	-.099	-.085	-.050	-.046	-.040		
C_n'	0°	.001	.001	.001	.001	.003	.005	.006	.009	.012	.014	.015	.031	.044	.040	.044	.052		
		Aileron neutral Yaw = +20°																	
C_L	0°	-0.003	0.118	0.296	0.607	0.898	0.995	1.087	1.132	1.160	1.154	0.955	0.876	0.866	0.793	0.737	0.612		
C_D	0°	.017	.017	.020	.041	.073	.091	.107	.138	.159	.206	.338	.399	.500	.659	.858	1.024		
C_l'	0°	-.001	-.002	-.002	-.002	-.002	0	.004	.015	.035	.066	.079	.089	.065	.051	.045	.041		
C_n'	0°	-.002	-.001	-.001	-.002	-.003	-.004	-.006	-.008	-.011	-.013	-.017	-.031	-.045	-.040	-.045	-.054		
		Right aileron up Yaw = -20°																	
C_l'	25°			0.033		0.033		0.036	0.038	0.040	0.040	0.037	0.031	0.017	0.006				
C_n'	25°			.003		-.002		-.005	-.006	-.008	-.010	-.015	-.021	-.018	-.009				
C_l'	35°			.045		.046		.048	.051	.054	.053	.056	.040	.033	.013				
C_n'	35°			.006		-.001		-.004	-.005	-.007	-.010	-.011	-.021	-.020	-.010				
C_l'	50°			.054		.062		.065	.067	.070	.065	.065	.041	.035	.015				
C_n'	50°			.012		.004		0	-.002	-.004	-.006	-.008	-.018	-.015	-.011				
C_l'	60°			.054		.070		.072	.076	.080	.079	.074	.047	.041	.011				
C_n'	60°			.015		.009		.005	.002	.006	-.002	-.004	-.015	-.012	-.009				
		Right aileron down Yaw = +20°																	
C_l'	7°			-0.011		-0.010		-0.009	-0.009	-0.006	-0.005	0	-0.004	-0.002	0.008				
C_n'	7°			.001		.002		.003	.003	.003	.002	0.003	.001	.003	.005				
C_l'	15°			-.021		-.019		-.018	-.016	-.012	-.010	.001	-.008	-.006	-.005				
C_n'	15°			.003		.006		.007	.006	.006	.006	.006	.005	.007	.006				
C_l'	25°			-.026		-.025		-.022	-.024	-.019	-.015	.002	-.010	-.007	-.006				
C_n'	25°			.007		.010		.011	.011	.010	.010	.011	.009	.011	.012				

TABLE XI

FORCE TESTS. 10 INCH AVERAGE CHORD BY 60 INCH SPAN CLARK Y WING
WITH TIP NO. 2 AND MEDIUM AILERONS. 20° SKEW
R.N. = 609,000 Velocity = 80 m.p.h. Yaw = 0°

α		-5°	-4°	-3°	0°	5°	10°	12°	14°	16°	18°	18°	20°	22°	25°	30°	40°	50°	60°
	δ_A	Aileron neutral																	
C_L	0°	-0.006	.059	.128	0.339	0.690	1.033	1.134	1.227	1.248	1.222	1.212	1.148	1.077	0.762	0.790	0.754	.690	.580
C_D	0°	.016	.015	.015	.019	.044	.085	.102	.125	.138	.159	.193	.236	.280	.398	.503	.681	.871	1.035
		Right aileron up																	
C_l'	10°				0.014		0.015						0.010			0.003	0.003		
C_n'	10°				-.001		-.003						-.005			-.004	-.003		
C_l'	20°				.030		.032						.024			.010	.009		
C_n'	20°				0		-.004						-.009			-.006	-.007		
C_l'	25°				.038		.039		0.039		0.037	0.035	.031	0.021	0.001	.014	.013		
C_n'	25°				.002		-.004		-.006		-.007	-.008	-.009	-.010	-.005	-.007	-.010		
C_l'	30°				.043		.045						.034			.018	.016		
C_n'	30°				.004		-.003						-.009			-.006	-.010		
C_l'	35°				.048		.050		.046		.044	.043	.037	.028	.007	.020	.018		
C_n'	35°				.005		-.002		-.004		-.006	-.007	-.008	-.010	-.004	-.008	-.011		
C_l'	40°				.051		.052						.033			.017	.019		
C_n'	40°				.006		.001						-.007			-.006	-.009		
C_l'	50°				.053		.058		.055		.049	.039	.035	.027	0	.004	.013		
C_n'	50°				.010		.004		-.001		-.003	-.004	-.005	-.005	-.001	-.002	-.006		
C_l'	60°				.058		.066		.063		.056	.046	.037	.026	0	.002	.010		
C_n'	60°				.013		.006		.002		0	-.002	-.002	-.002	.001	-.002	-.005		
		Right aileron down																	
C_l'	7°				-0.011		-0.010		-0.009		-0.006	-0.006	-0.005	-0.001	-0.004	0	-0.001		
C_n'	7°				.001		.003		.003		.004	.004	.004	.004	.002	0.002	.004		
C_l'	8½°				-.012		-.018						-.004			0	-.001		
C_n'	8½°				.001		.003						.005			.003	.004		
C_l'	10°				-.015		-.014						-.005			0	-.001		
C_n'	10°				.002		.004						.005			.003	.004		
C_l'	11½°				-.016		-.015						-.005			0	-.002		
C_n'	11½°				.002		.004						.006			.003	.005		
C_l'	12°				-.017		-.016						-.005			0	-.001		
C_n'	12°				.002		.005						.006			.004	.005		
C_l'	13°				-.018		-.017						-.005			0	-.001		
C_n'	13°				.003		.005						.007			.004	.006		
C_l'	14°				-.020		-.018						-.006			0	-.002		
C_n'	14°				.003		.006						.007			.005	.006		
C_l'	15°				-.020		-.019		-.016		-.014	-.010	-.005	.002	-.004	-.001	-.002		
C_n'	15°				.003		.006		.007		.007	.007	.007	.006	.004	.005	.007		
C_l'	20°				-.025		-.023						-.006			-.001	-.002		
C_n'	20°				.005		.006						.009			.007	.006		
C_l'	25°				-.029		-.026		-.021		-.020	-.013	.003	.004	-.002	0	-.001		
C_n'	25°				.007		.011		.011		.012	.012	.011	.009	.006	.006	.011		
C_l'	30°				-.033		-.027						.007			.001	0		
C_n'	30°				.006		.013						.013			.009	.013		
C_l'	35°				-.034		-.029						-.006			.002	.001		
C_n'	35°				.009		.015						.014			.011	.014		

TABLE XII

FORCE TESTS. 10 INCH AVERAGE CHORD BY 60 INCH SPAN CLARK Y WING
WITH TIP NO. 2 AND MEDIUM AILERONS. 20° SKEW
R.N. = 609,000 Velocity = 80 m.p.h. Yaw = ±20°

α		-5°	-3°	0°	5°	10°	12°	14°	16°	18°	20°	22°	25°	30°	40°	50°	60°
	δ_A	Aileron neutral Yaw = -20°															
C_L	0°	-0.002	0.113	0.288	0.603	0.888	0.990	1.071	1.127	1.143	1.139	0.958	0.921	0.874	0.798	0.742	0.621
C_D	0°	.015	.014	.019	.038	.071	.088	.105	.126	.156	.203	.326	.392	.503	.673	.872	1.036
C_l'	0°	-.001	0	.001	.001	-.001	-.002	-.006	-.019	-.041	-.060	-.084	-.104	-.065	-.050	-.045	-.041
C_n'	0°	.002	.002	.002	.002	.004	.005	.007	.009	.012	.015	.017	.088	.045	.040	.046	.052
		Aileron neutral Yaw = +20°															
C_L	0°	0.005	0.121	0.301	0.613	0.903	1.004	1.085	1.138	1.154	1.154	0.958	0.870	0.848	0.786	0.735	0.611
C_D	0°	0.015	.014	.019	.040	.071	.089	.106	.127	.159	.206	.336	.398	.491	.666	.860	1.030
C_l'	0°	0	-.001	-.001	-.002	-.001	0	.003	.014	.037	.066	.081	.086	.083	.053	.046	.041
C_n'	0°	-.001	-.001	-.002	-.002	-.004	-.005	-.006	-.009	-.011	-.013	-.018	-.034	-.045	-.041	-.046	-.054
		Right aileron up Yaw = -20°															
C_l'	25°			0.027		0.030		0.032	0.034	0.034	0.034	0.030	0.029	0.005	0.002		
C_n'	25°			.001		-.004		-.006	-.007	-.008	-.011	-.016	-.017	-.017	-.010		
C_l'	35°			.039		.040		.042	.045	.048	.048	.050	.042	.027	.014		
C_n'	35°			.004		-.003		-.005	-.007	-.008	-.011	-.019	-.019	-.022	-.013		
C_l'	50°			.052		.053		.054	.057	.059	.060	.065	.052	.037	.022		
C_n'	50°			.011		.002		-.002	-.004	-.005	-.008	-.011	-.017	-.021	-.015		
C_l'	60°			.057		.062		.062	.064	.068	.065	.069	.053	.041	.027		
C_n'	60°			.016		.006		.001	-.001	-.002	-.006	-.009	-.015	-.021	-.009		
		Right aileron down Yaw = +20°															
C_l'	7°			-0.011		-0.009		-0.010	-0.008	-0.007	-0.005	0	-0.005	-0.001	-0.004		
C_n'	7°			.001		.003		.003	.003	.003	.004	0.004	.004	.003	.005		
C_l'	15°			-.018		-.017		-.017	-.015	-.013	-.008	.001	-.008	-.003	-.006		
C_n'	15°			.003		.006		.007	.007	.006	.006	.006	.008	.006	.009		
C_l'	25°			-.025		-.023		-.023	-.024	-.021	-.014	-.001	-.010	-.007	-.007		
C_n'	25°			.006		.011		.012	.013	.012	.014	.011	.013	.012	.014		

TABLE XIII

FORCE TESTS. 10 INCH AVERAGE CHORD BY 60 INCH SPAN CLARK Y WING
WITH TIP NO. 2 AND SHORT, WIDE AILERONS. 10° SKEW
R.N. = 609,000 Velocity = 80 m.p.h. Yaw = 0°

α		-5°	-4°	-3°	0°	5°	10°	12°	14°	15°	16°	18°	20°	22°	25°	30°	40°	50°	60°
	δ_A	Aileron neutral																	
C_L	0°	-0.003	0.068	.138	0.334	0.696	1.023	1.135	1.225	1.250	1.228	1.202	1.154	1.077	0.760	0.785	0.751	.689	0.585
C_D	0°	.016	.015	.016	.020	.046	.085	.103	.126	.139	.160	.193	.239	.279	.399	.503	.680	.859	1.024
		Right aileron up																	
C_l'	10°				0.016		0.018						0.012			0.002	0.003		
C_n'	10°				0		-.003						-.005			-.003	-.004		
C_l'	20°				.033		.035						.031			.007	.007		
C_n'	20°				.002		-.004						-.009			-.006	-.008		
C_l'	25°				.043		.044		0.043		0.043	0.043	.040	0.035	0.007	.009	.009		
C_n'	25°				.004		-.003		-.005		-.007	-.008	-.011	-.011	-.007	-.007	-.010		
C_l'	30°				.051		.051						.047			.014	.014		
C_n'	30°				.007		-.001						-.010			-.008	-.011		
C_l'	35°				.059		.059		.057		.057	.057	.053	.047	.019	.017	.018		
C_n'	35°				.011		.001		-.002		-.004	-.006	-.009	-.011	-.010	-.009	-.013		
C_l'	40°				.058		.066						.060			.019	.022		
C_n'	40°				.013		.005						-.007			-.010	-.014		
C_l'	50°				.062		.085		.083		.082	.080	.072	.068	.033	.020	.028		
C_n'	50°				.017		.011		.006		.005	.002	-.002	-.005	-.008	-.009	-.014		
C_l'	60°				.064		.084		.091		.093	.093	.089	.080	.052	.015	.019		
C_n'	60°				.021		.015		.012		.009	.007	.005	.003	-.005	-.005	-.011		
		Right aileron down																	
C_l'	7°				-0.011		-0.009		-0.008		-0.005	-0.003	-0.002	-0.003	0.001	0	0		
C_n'	7°				.001		.003		.005		.004	.004	.004	.004	.002	.003	.004		
C_l'	8½°				-.013		-.010						-.002			0	0		
C_n'	8½°				.002		.004						.004			.003	.004		
C_l'	10°				-.015		-.011						-.001			0	0		
C_n'	10°				.002		.005						.005			.004	.005		
C_l'	11½°				-.017		-.012						-.001			.001	0		
C_n'	11½°				.003		.006						.006			.005	.006		
C_l'	12°				-.018		-.013						-.001			0	0		
C_n'	12°				.003		.006						.006			.006	.006		
C_l'	13°				-.019		-.013						-.001			-.001	0		
C_n'	13°				.004		.006						.006			.006	.007		
C_l'	14°				-.019		-.014						0			.001	0		
C_n'	14°				.004		.007						.007			.007	.007		
C_l'	15°				-.021		-.015		-.011		-.009	-.006		.003	.001	.001	0		
C_n'	15°				.005		.008		.008		.008	.009	.007	.007	.005	.007	.008		
C_l'	20°				-.024		-.016						.013			.002	.001		
C_n'	20°				.007		.010						.010			.009	.010		
C_l'	25°				-.026		-.018		-.016		-.015	-.003	.019	.009	.003	.003	.002		
C_n'	25°				.009		.013		.013		.015	.014	.014	.012	.009	.012	.013		
C_l'	30°				-.027		-.020						.020			.004	.003		
C_n'	30°				.012		.015						.016			.013	.015		
C_l'	35°				-.030		-.020						.013			.006	.005		
C_n'	35°				.014		.017						.020			.015	.017		

TABLE XIV

FORCE TESTS. 10 INCH AVERAGE CHORD BY 60 INCH SPAN CLARK Y
WING WITH TIP NO. 2 AND SHORT, WIDE AILERONS. 10° SKEW
R.N. = 609,000 Velocity = 80 m.p.h. Yaw = ±20°

α		-5°	-3°	0°	5°	10°	12°	14°	16°	18°	20°	22°	25°	30°	40°	50°	60°		
	δ_A	Aileron neutral Yaw = -20°																	
C_L	0°	0.001	0.118	0.290	0.601	0.887	0.985	1.075	1.138	1.140	1.145	0.974	0.901	0.869	0.795	0.744	0.635		
C_D	0°	.017	.016	.020	.040	.072	.090	.106	.125	.158	.204	.326	.394	.500	.687	.869	1.030		
$C_{l'}$	0°	0	0	.001	.002	.001	-.001	-.006	-.017	-.039	-.061	-.085	-.099	-.084	-.050	-.045	-.041		
$C_{n'}$	0°	.002	.002	.001	.002	.003	.005	.006	.009	.011	.014	.015	.031	.045	.039	.045	.051		
		Aileron neutral Yaw = +20°																	
C_L	0°	0.005	0.125	0.302	0.611	0.910	1.006	1.060	1.140	1.182	1.152	0.964	0.875	0.865	0.791	0.742	0.617		
C_D	0°	.015	.015	.019	.040	.074	.090	.109	.128	.159	.208	.334	.397	.500	.658	.858	1.017		
$C_{l'}$	0°	-.001	-.001	-.001	-.002	-.001	0	.004	.015	.037	.064	.080	.081	.063	.050	.045	.042		
$C_{n'}$	0°	-.001	-.001	-.001	-.003	-.004	-.004	-.006	-.009	-.010	-.013	-.017	-.034	-.046	-.040	-.046	-.054		
		Right aileron up Yaw = -20°																	
$C_{l'}$	25°			0.028		0.027		0.029	0.033	0.034	0.035	0.033	0.033	0.024	0.006				
$C_{n'}$	25°			.003		-.003		-.004	-.006	-.007	-.010	-.014	-.019	-.021	-.012				
$C_{l'}$	35°			.042		.041		.041	.042	.046	.048	.047	.046	.039	.012				
$C_{n'}$	35°			.006		.001		-.002	-.004	-.006	-.009	-.014	-.021	-.026	-.016				
$C_{l'}$	50°			.063		.064		.064	.066	.070	.071	.075	.062	.057	.023				
$C_{n'}$	50°			.023		.011		.006	.003	.001	-.004	-.008	-.017	-.027	-.016				
$C_{l'}$	60°			.072		.079		.081	.084	.088	.087	.085	.076	.072	.029				
$C_{n'}$	60°			.036		.022		.016	.013	.009	.004	.001	-.012	-.024	-.013				
		Right aileron down Yaw = +20°																	
$C_{l'}$	7°			-0.012		-0.008		-0.007	-0.007	-0.008	-0.003	0.001	-0.003	-0.001	-0.002				
$C_{n'}$	7°			.001		.003		.003	.003	.003	.002	.004	.003	.003	.004				
$C_{l'}$	15°			-.019		-.014		-.014	-.017	-.016	-.009	.004	-.005	-.001	-.002				
$C_{n'}$	15°			.004		.007		.008	.009	.008	.007	.007	.006	.007	.008				
$C_{l'}$	25°			-.022		-.019		-.021	-.021	-.019	-.010	.004	-.007	-.002	-.002				
$C_{n'}$	25°			.008		.012		.014	.016	.017	.016	.012	.013	.012	.012				

TABLE XV

FORCE TESTS. 10 INCH AVERAGE CHORD BY 60 INCH SPAN CLARK Y
WING WITH TIP NO. 2 AND SHORT, WIDE AILERONS. 20° SKEW
R.N. = 609,000 Velocity = 80 m.p.h. Yaw = 0°

α		-5°	-4°	-3°	0°	5°	10°	12°	14°	16°	18°	20°	22°	25°	30°	40°	50°	60°
	δ_A	Aileron neutral																
C_L	0°	-0.003	0.064	0.133	0.336	0.702	1.027	1.145	1.230	1.258	1.234	1.223	1.186	1.090	0.804	0.803	0.753	0.693	0.584	0.584
C_D	0°	.016	.016	.016	.019	.044	.084	.103	.124	.138	.180	.196	.243	.282	.408	.606	.682	.864	1.027
		Right aileron up																
$C_{l'}$	10°				0.015		0.017						0.012			0.002	0.002	
$C_{n'}$	10°				0		-.003						-.006			-.004	-.004	
$C_{l'}$	20°				.033		.034						.030			.008	.008	
$C_{n'}$	20°				.001		-.004						-.011			-.006	-.010	
$C_{l'}$	25°				.041		.041		0.041		0.042	0.042	.039	.034	.019	.011	.010	
$C_{l'}$	25°				.003		-.003		-.004		-.007	-.009	-.011	-.013	-.012	-.008	-.012	
$C_{n'}$	30°				.050		.048						.048			.015	.014	
$C_{n'}$	30°				.005		-.003						-.012			-.011	-.013	
$C_{l'}$	35°				.059		.057		.055		.055	.056	.053	.048	.034	.019	.018	
$C_{l'}$	35°				.009		0		-.004		-.006	-.008	-.010	-.012	-.014	-.011	-.015	
$C_{l'}$	40°				.064		.067						.058			.022	.022	
$C_{l'}$	40°				.012		.002						-.009			-.012	-.016	
$C_{n'}$	50°				.061		.062		.062		.062	.061	.071	.064	.050	.025	.030	
$C_{l'}$	50°				.015		.009		.005		.002	-.001	-.004	-.007	-.012	-.006	-.016	
$C_{n'}$	60°				.063		.081		.089		.093	.090	.082	.072	.061	.033	.016	
$C_{l'}$	60°				.012		.014		.012		.009	.006	.004	.002	-.006	-.007	-.011	
		Right aileron down																
$C_{l'}$	7°				-0.012		-0.010		-0.009		-0.008	-0.006	-.006	-0.004	0.013	0	-0.002	
$C_{n'}$	7°				.002		.004		.004		.004	.004	.005	.005	.002	.003	.003	
$C_{l'}$	8½°				-.014		-.012						-.006			.001	-.002	
$C_{n'}$	8½°				.002		.004						.005			.004	.004	
$C_{l'}$	10°				-.016		-.012						-.005			0	-.001	
$C_{n'}$	10°				.002		.004						.006			.003	.005	
$C_{l'}$	11½°				-.018		-.014						-.006			.001	-.001	
$C_{n'}$	11½°				.003		.005						.007			.004	.006	
$C_{l'}$	13°				-.018		-.015						-.005			.001	-.001	
$C_{n'}$	13°				.003		.006						.007			.004	.006	
$C_{l'}$	13°				-.020		-.018						-.007			.001	-.002	
$C_{n'}$	13°				.004		.006						.007			.005	.006	
$C_{l'}$	14°				-.020		-.016						-.006			0	-.001	
$C_{n'}$	14°				.004		.007						.008			.005	.007	
$C_{l'}$	15°				-.022		-.018		-.015		-.012	-.009	-.007	-.001	.017	0	-.002	
$C_{n'}$	15°				.005		.006		.008		.009	.009	.009	.009	.003	.006	.006	
$C_{l'}$	20°				-.028		-.021						-.005			.002	0	
$C_{n'}$	20°				.007		.010						.011			.007	.010	
$C_{l'}$	25°				-.031		-.024		-.021		-.018	-.011	.011	.010	.021	.002	0	
$C_{n'}$	25°				.009		.013		.014		.014	.014	.012	.011	.005	.009	.013	
$C_{l'}$	30°				-.032		-.028						.014			.005	-.003	
$C_{l'}$	30°				.011		.016						.013			.011	.014	
$C_{n'}$	35°				-.034		-.024						.005			.005	.003	
$C_{n'}$	35°				.013		.017						.018			.014	.017	

TABLE XVI

FORCE TESTS. 10 INCH AVERAGE CHORD BY 60 INCH SPAN CLARK Y
WING WITH TIP NO. 2 AND SHORT, WIDE AILERONS. 30° SKEW
R.N. = 609,000 Velocity = 80 m.p.h. Yaw = ± 20°

α		-5°	-3°	0°	5°	10°	12°	14°	16°	18°	20°	22°	25°	30°	40°	50°	60°		
	δ_A	Aileron neutral Yaw = -20°																	
C_L	0°	0.001	0.117	0.293	0.608	0.899	0.999	1.088	1.134	1.148	1.153	0.978	0.909	0.873	0.803	0.754	0.625		
C_D	0°	.017	.016	.020	.040	.073	.090	.106	.127	.158	.206	.323	.401	.506	.676	.872	1.039		
C_T'	0°	0	.001	.002	.002	0	-.002	-.006	-.017	-.041	-.063	-.084	-.085	-.064	-.051	-.046	-.041		
C_n'	0°	.002	.002	.002	.002	.004	.005	.006	.009	.012	.014	.014	.029	.045	.040	.045	.052		
		Aileron neutral Yaw = +20°																	
C_L	0°	0.001	0.122	0.300	0.615	0.906	1.013	1.093	1.147	1.166	1.159	0.967	0.888	0.873	0.793	0.738	0.614		
C_D	0°	.016	.015	.019	.040	.074	.091	.107	.127	.158	.207	.334	.397	.501	.670	.861	1.020		
C_T'	0°	0	-.001	-.001	-.002	-.001	.001	.004	.015	.037	.064	.081	.107	.065	.051	.046	.041		
C_n'	0°	-.002	-.002	-.003	-.002	-.003	-.005	-.006	-.009	-.012	-.013	-.018	-.035	-.045	-.041	-.046	-.053		
		Right aileron up Yaw = -20°																	
C_T'	25°			0.025		0.025		0.028	0.030	0.033	0.033	0.031	0.028	0.019	0.005				
C_n'	25°			.002		-.003		-.005	-.006	-.008	-.010	-.012	-.019	-.020	-.013				
C_T'	35°			.039		.036		.038	.040	.044	.046	.043	.041	.033	.011				
C_n'	35°			.006		-.001		-.004	-.006	-.008	-.010	-.014	-.021	-.025	-.017				
C_T'	50°			.057		.057		.059	.061	.064	.066	.061	.055	.049	.021				
C_n'	50°			.017		.006		.002	-.001	-.004	-.007	-.012	-.020	-.027	-.022				
C_T'	60°			.065		.071		.073	.076	.082	.082	.086	.068	.057	.028				
C_n'	60°			.028		.015		.010	.007	.004	0	-.002	-.016	-.024	-.018				
		Right aileron down Yaw = +20°																	
C_T'	7°			-0.013		-0.009		-0.008	-0.010	-0.007	-0.005	0.003	-0.004	-0.002	-0.002				
C_n'	7°			.002		.003		.004	.004	.004	.003	.004	.003	.001	.005				
C_T'	15°			-.021		-.017		-.017	-.019	-.016	-.010	.004	-.007	-.003	-.004				
C_n'	15°			.005		.007		.009	.010	.009	.008	.007	.007	.005	.008				
C_T'	25°			-.027		-.025		-.024	-.026	-.019	-.011	.004	-.008	-.005	-.004				
C_n'	25°			.009		.012		.015	.018	.018	.017	.012	.013	.009	.013				

TABLE XVII

ROTATION TESTS. 10 INCH AVERAGE CHORD BY 60 INCH SPAN CLARK Y

WING WITH TIP NO. 2, AILERON GAP SEALED

R.N. = 609,000 Velocity = 80 m.p.h. Yaw = 0°, -20°

C_λ is given for forced rotation at $\frac{pib}{2V}$ = 0.05, (+) aiding rotation, (-) damping rotation

α		0°	12°	14°	17°	18°	19°	20°	21°	22°	24°	26°	26°	27°	28°	30°	35°	40°
		Aileron neutral Yaw = 0°																
(+) Rotation	C_λ	-0.022	-0.021		-0.001		0.002	0.027	0.025	0.023	0.015				-0.002	-0.002		-0.003
(-) Rotation	C_λ	-.017	-.016		.001		.003	.026	.025	.022	.017				.002	.001		.001
		Aileron neutral Yaw = -20°																
(+) Rotation	C_λ	-0.019	-0.025	-0.029		-0.056				-0.071	-0.078	-0.082	-0.083	-.081	-.075	-0.061	-.055	-0.053
(-) Rotation	C_λ	-.015	-.007	0		.038				.081	.082	.082	.081	.080	.077	.075	.051	.045

TABLE XVIII. CRITERIONS SHOWING RELATIVE MERITS OF AILERONS

Subject	Criterion	Rectangular tip[k] Medium ailerons				Rectangular tip[k] Short wide ailerons				Rounded tip No. 1 Medium ailerons				Rounded tip No. 1 Short wide ailerons			
		Standard 25° up 25° dn	Differential No. 1 35° up 15° dn	Differential No. 2 50° up 7° dn	Up only 60°	Standard 25° up 25° dn	Differential No. 1 35° up 15° dn	Differential No. 2 50° up 7° dn	Up only 60°	Standard 25° up 25° dn	Differential No. 1 35° up 15° dn	Differential No. 2 50° up 7° dn	Up only 60°	Standard 25° up 25° dn	Differential No. 1 35° up 15° dn	Differential No. 2 50° up 7° dn	Up only 60°
Wing area or minimum speed	$C_{L_{max}}$ ($\delta_A=0°$)	1.270	1.270	1.270	1.270	1.258	1.258	1.258	1.258	1.194	1.194	1.194	1.194	1.199	1.199	1.199	1.199
Speed range	$C_{L_{max}}/C_{D_{min}}$ ($\delta_A=0°$)	79.4	79.4	79.4	79.4	78.5	78.5	78.5	78.5	78.0	78.0	78.0	78.0	78.3	78.3	78.3	78.3
Rate of climb	L/D at $C_L=0.70$ ($\delta_A=0°$)	15.9	15.9	15.9	15.9	15.9	15.9	15.9	15.9	15.6	15.6	15.6	15.6	15.6	15.6	15.6	15.6
Lateral controllability	RC $\alpha = 0°$	.204	.202	.214	.198	.236	.234	.226	.202	.208	.210	.212	.190	.222	.235	.231	.193
	RC $\alpha = 10°$	.076	.074	.074	.072	.078	.084	.083	.076	.073	.070	.071	.067	.078	.083	.084	.077
	RC $\alpha = 20°$	[i].038	[i].051	[i].055	[i].054	[i].048	[i].058	[ig].073	[ih].074	.023	.038	.038	.037	.034	.048	.067	.062
	RC $\alpha = 30°$	.017	.005	.002	.002	.019	.025	.036	.062	.024	.030	.011	0	.015	.024	.024	.021
Lateral control with sideslip	Maximum α at which ailerons will balance C_l' due to 20° yaw	20°	20°	21°	22°	19°	20°	22°	25°	18°	19°	20°	20°	18°	20°	21°	23°
Yawing moments due to ailerons (+)Favorable (−)Unfavorable	C_{n_A} $\alpha = 0°$	−.007	[b]−.003	[b]−.002	.016	−.007	[b]−.002	[a]−.001	.021	−.005	[b]−.003	[b]−.002	[a]−.001	−.006	[b]−.003	[b]−.002	.021
	C_{n_A} $\alpha = 10°$	−.004	[b]−.002	[b]−.001	.018	−.007	[b]−.003	[a]−.002	.026	−.003	[b]−.002	[a]−.001	.018	−.006	[b]−.003	[a]−.001	.027
	C_{n_A} $\alpha = 20°$	−.010	[b]−.007	[b]−.006	.013	−.010	[b]−.008	[b]−.007	[a]−.003	−.013	[c]−.010	[c]−.009	[c]−.005	−.013	[c]−.009	[c]−.007	[a]−.003
	C_{n_A} $\alpha = 30°$	−.006	−.008	[b]−.007	[b]−.004	−.012	[d]−.009	[c]−.005	[c]−.002	−.007	[c]−.004	[f][c]−.004	[f][a]−.001	−.012	[c]−.008	[d]−.007	[b]−.003
Lateral stability ($\delta_A = 0°$)	α for initial instability in rolling	18°	18°	18°	18°	18°	18°	18°	18°	16°	16°	16°	16°	16°	16°	16°	16°
	α for initial instability at $pb/2V=0.05$: Yaw = 0°	17°	17°	17°	17°	17°	17°	17°	17°	15°	15°	15°	15°	15°	15°	15°	15°
	Yaw = 20°	11°	11°	11°	11°	12°	12°	12°	12°	12°	12°	12°	12°	12°	12°	12°	12°
	Maximum unstable $C_{l'}$: Yaw = 0°	.048	.048	.048	.048	.022	.022	.022	.022	.030	.030	.030	.030	.030	.030	.030	.030
	Yaw = 20°	.093	.093	.093	.093	.085	.085	.085	.085	.065	.085	.085	.085	.085	.085	.085	.085

Footnotes are given at end of table.

TABLE XVIII. CRITERIONS SHOWING RELATIVE MERITS OF AILERONS (Continued)

Subject	Criterion	Rounded tip No. 2 Medium ailerons 0° skew				Rounded tip No. 2 Medium ailerons 10° skew				Rounded tip No. 2 Medium ailerons 20° skew				Rounded tip No. 2 Short wide ailerons 10° skew				Rounded tip No. 2 Short wide ailerons 20° skew			
		Standard 25° up 25° dn	Differential No. 1 35° up 15° dn	Differential No. 2 50° up 7° dn	Up only 60°	Standard 25° up 25° dn	Differential No. 1 35° up 15° dn	Differential No. 2 50° up 7° dn	Up only 60°	Standard 25° up 25° dn	Differential No. 1 35° up 15° dn	Differential No. 2 50° up 7° dn	Up only 60°	Standard 25° up 25° dn	Differential No. 1 35° up 15° dn	Differential No. 2 50° up 7° dn	Up only 60°	Standard 25° up 25° dn	Differential No. 1 35° up 15° dn	Differential No. 2 50° up 7° dn	Up only 60°
Wing area or minimum speed	$C_{L_{max}}$ ($\delta_A = 0°$)	1.245	1.245	1.245	1.245	1.240	1.240	1.240	1.240	1.248	1.248	1.248	1.248	1.250	1.250	1.250	1.250	1.258	1.258	1.258	1.258
Speed range	$C_{L_{max}}/C_{D\ in}$ ($\delta_A = 0°$)	82.5	82.5	82.5	82.5	81.6	81.6	81.6	81.6	83.2	83.2	83.2	83.2	81.2	81.2	81.2	81.2	80.6	80.6	80.6	80.6
Rate of climb	L/D at C_L=0.70 ($\delta_A = 0°$)	15.9	15.9	15.9	15.9	15.6	15.6	15.6	15.6	15.6	15.6	15.6	15.6	14.9	14.9	14.9	14.9	15.9	15.9	15.9	15.9
Lateral controllability	RC $\alpha = 0°$	.217	.216	.217	.197	.233	.255	.231	.202	.226	.233	.218	.195	.227	.265	.242	.215	.238	.270	.242	.210
	RC $\alpha = 10°$	.072	.070	.075	.071	.075	.076	.076	.070	.072	.076	.074	.069	.069	.081	.099	.088	.073	.082	.098	.084
	RC $\alpha = 20°$	.022	.033	.043	.041	.030	.039	.045	.042	.032	.043	.039	.035	.027	.057	.069	.079	.032	.080	.072	.072
	RC $\alpha = 30°$	.037	.031	.028	.008	.026	.020	.006	.001	.029	.035	.008	.003	.021	.032	.032	.022	.022	.034	.037	.045
Lateral control with sideslip	Maximum α at which ailerons will balance C_l' due to 30° yaw	19°	19°	20°	21°	20°	20°	20°	22°	19°	20°	20°	21°	18°	20°	22°	22°	19°	20°	20°	22°
Yawing moments due to ailerons (+) Favorable (−) Unfavorable	C_{n_A} $\alpha = 0°$	−.004	[a] −.008 −.002	[c] −.010 −.002	.013	−.005	[a] −.008 −.002	[a] −.009 −.002	[a] −.013 −.001	−.005	[b] −.008 −.002	[b] −.009 −.002	[a] −.013 −.001	[c] −.008	[b] −.004 −.003	[b] −.016 −.002	.021	−.006	[b] −.004 −.003	[b] −.014 −.002	.019
	C_{n_A} $\alpha = 10°$	[c] −.002	[a] −.005 −.001	.012	.017	−.002	[a] −.005 −.001	[a] −.012 −.001	.017	−.003	[a] −.005 −.001	[a] −.013 −.001	.018	[c] −.005	[b] −.007 −.002	[b] −.025 −.001	.030	−.005	[a] −.006 −.002	[a] −.021 −.002	.028
	C_{n_A} $\alpha = 20°$	−.010	[b] −.005	[c] −.007 −.005	[a] −.012 −.002	−.010	[c] −.005	[c] −.006 −.004	[a] −.013 −.001	−.010	[b] −.004	[c] −.005 −.004	[a] −.010 −.001	−.016	[b] −.004 −.005	[b] −.020 −.004	[a] −.025 −.001	−.012	[b] −.003 −.006	[b] −.018 −.005	[a] −.031 −.002
	C_{n_A} $\alpha = 30°$	−.007	[a] −.003	[a] −.001 −.003	[j] −.003 [a] −.001	−.005	[c] −.003	[c] −.003	[f] −.003 −.001	−.006	[c] −.004	[f] −.001 [c] −.004	[f] −.003 [a] −.002	−.013	[c] −.006	[c] −.008	[c] −.003 −.002	−.011	[c] −.007	[d] −.004 −.007	[b] −.011 −.003
Lateral stability ($\delta_A = 0°$)	α for initial instability in rolling	18°	18°	18°	18°	18°	18°	18°	18°	18°	19°	18°	18°	18°	18°	18°	18°	18°	18°	18°	18°
	α for initial instability at $p'b/2V = 0.05$: $Y_{aw} = 0°$	17°	17°	17°	17°	17°	17°	17°	17°	17°	17°	17°	17°	17°	17°	17°	17°	17°	17°	17°	17°
	$Y_{aw} = 20°$	14°	14°	14°	14°	14°	14°	14°	14°	14°	14°	14°	14°	14°	14°	14°	14°	14°	14°	14°	14°
	Maximum unstable C_l: $Y_{aw} = 0°$	.027	.027	.027	.027	.027	.027	.027	.027	.027	.027	.027	.027	.027	.027	.027	.027	.027	.027	.027	.027
	$Y_{aw} = 20°$	.082	.082	.082	.082	.082	.082	.082	.082	.082	.082	.082	.082	.082	.082	.082	.082	.082	.082	.082	.082

a to f, j, Where the maximum yawing moment occurred below maximum deflections, the letters indicate the deflection of the up-aileron as follows:
a = 10°, b = 15°, c = 20°, d = 25°, e = 30°, f = 40°, j = 50°.

k, Data taken from reference 1.

i, Based on a lift coefficient about 12 per cent lower than normal.

g, RC has a minimum value of 0.056 at α = 17° and a maximum value of 0.072 at α = 22°.

h, RC = 0.064 at 17° and 0.094 at α = 22°.