MAR 10 1933
Library L. M. A. L.

[redacted]

TECHNICAL NOTES

NATIONAL ADVISORY COMMITTEE FOR AERONAUTICS

No. 451

WIND-TUNNEL RESEARCH COMPARING LATERAL CONTROL DEVICES, PARTICULARLY AT HIGH ANGLES OF ATTACK

X. VARIOUS CONTROL DEVICES ON A WING WITH A FIXED AUXILIARY AIRFOIL

By Fred E. Weick and Richard W. Noyes
Langley Memorial Aeronautical Laboratory

Washington
March, 1933

NASA Technical Library
3 1176 01433 1525

NATIONAL ADVISORY COMMITTEE FOR AERONAUTICS

TECHNICAL NOTE NO. 451

WIND-TUNNEL RESEARCH COMPARING LATERAL CONTROL DEVICES, PARTICULARLY AT HIGH ANGLES OF ATTACK

X. VARIOUS CONTROL DEVICES ON A WING WITH A FIXED AUXILIARY AIRFOIL

By Fred E. Weick and Richard W. Noyes

SUMMARY

This is the tenth report on a series of systematic tests comparing lateral control devices with particular reference to their effectiveness at high angles of attack. The present tests were made with two sizes of ordinary ailerons and different sizes of spoilers on a Clark Y wing model having a narrow auxiliary airfoil fixed ahead and above the leading edge, the chords of the main and auxiliary airfoils being parallel. In addition, the auxiliary airfoil itself was given angular deflection for the purpose of providing rolling moments for lateral control.

The tests were made in the N.A.C.A. 7 by 10 foot wind tunnel. They included both force and rotation tests to show the effect of the devices on the lift and drag characteristics of the wing and on the lateral stability characteristics, as well as on lateral control. They showed that none of the aileron arrangements tried would give rolling control of an assumed satisfactory value at all angles of attack up to the stall except at the expense of abnormally high deflections and very heavy hinge moments. The most effective combination of ailerons and spoilers gave satisfactory values of rolling moment at all angles of attack below the stall and the values did not fall off as rapidly above the stall as with ailerons alone. With an arrangement of this type having the proper relative proportions and linkage it should be possible to obtain reasonably satisfactory yawing moments and control forces. Deflecting one-half of the auxiliary airfoil downward for the purpose of control gave strong favorable yawing moments at all angles of attack but gave very small rolling moments at the low angles of attack.

INTRODUCTION

A series of systematic wind-tunnel investigations, one of which is covered by this report, is being made by the National Advisory Committee for Aeronautics in order to compare various lateral control devices. The various devices are given the same routine tests to show their relative merits in regard to lateral controllability and their effect on the lateral stability and the performance of an airplane. They are being tested first on rectangular Clark Y wings of aspect ratio 6, followed by wings with different plan forms, wings with high lift devices, and also wings with such variations as washout and sweepback, which affect lateral stability. The first report of this series (reference 1, Part I) deals with three sizes of ordinary ailerons, one of these a medium-sized one taken from the average of a number of conventional airplanes and used as the standard of comparison throughout the entire investigation. Other work that has been done in this series is reported in reference 1, Parts II to IX.

The present report covers the investigation of various of the lateral control devices on a wing arrangement incorporating a fixed auxiliary airfoil of the type described in reference 2. The combination wing and auxiliary airfoil has a substantially higher maximum lift coefficient than the plain wing alone, and therefore at high angles of attack the lateral control device must produce a higher rolling-moment coefficient to give the same initial acceleration in roll. The lateral control devices tested include plain ailerons of two different sizes, the standard size and a short wide one; two forms of rear hinge spoilers used in combination with the ailerons; and one front hinge spoiler used alone. Finally, the auxiliary airfoil itself was tested as a lateral control device by deflecting the right and left halves separately.

APPARATUS

Models.- To include tests of all the control devices four different wing models of the same form were used. A summary of the design of each model is given in the following table:

Wing model	Ailerons	Spoilers	Auxiliary airfoil
No. 1	Standard	A or C	Fixed
No. 2	Short, wide	C	Fixed
No. 3	Short, wide	D	Fixed
No. 4	None	None	Movable for lateral control

The main wing of each of the four models was a 10 by 60 inch laminated mahogany Clark Y airfoil; the auxiliary airfoil was constructed of aluminum alloy with a chord 14.5 per cent of the main wing chord and had the N.A.C.A. 22 airfoil section. The relative location of the two airfoils is given in Figure 1, and their ordinates are given in Table I. The wing model that allowed the auxiliary airfoil to be deflected for lateral control had different supports for the auxiliary than the other three. (See fig. 2.)

The two sizes of ailerons and the three forms of spoilers are illustrated in Figure 1. The ailerons are the same as those tested on the Clark Y wing alone in reference 1, Part I, and the spoilers are the same as those of corresponding letter in reference 1, Part V. The spoilers were made of steel plate 1/32 inch thick, and were set into the wings in such a manner that the upper surface was continuous when the spoilers were down.

Wind tunnel.- All the present tests were made in the N.A.C.A. 7 by 10 foot open-jet wind tunnel. In this tunnel the model is supported in such a manner that the forces and the moments about the quarter-chord point of the mid section of the model are measured directly in coefficient form. For autorotation tests, the standard force-test tripod is replaced by a special mounting that permits the model to rotate about the longitudinal wind axis passing through the midspan quarter-chord point. This apparatus is mounted on the balance, and the rolling-moment coefficient can be read directly during the forced-rotation tests. A complete description of the above equipment is given in reference 3.

TESTS

The tests were conducted in accordance with the standard procedure, and at the dynamic pressure and Reynolds Number employed throughout the entire series of investigations on lateral control. (Reference 1.) The dynamic pressure was 16.37 pounds per square foot, corresponding to an air speed of 80 miles per hour at standard density, and the Reynolds Number was 609,000, based on the chord of the main wing section.

The regular force tests were made at a sufficient number of angles of attack to determine the maximum lift coefficient, the minimum drag coefficient, and the drag coefficient at $C_L = 0.70$, which is used to give a rate-of-climb criterion. Free-autorotation tests were made to determine the angle of attack above which autorotation was self-starting with all controls neutral. Forced-rotation tests were also made in which the rolling moment while rolling was measured at the rotational velocity corresponding to $\frac{p'b}{2V} = 0.05$, the highest rate found to be obtained in gusty air, and at angles of yaw of both 0° and -20°.

The accuracy is considered satisfactory except in the vicinity of the stall. The rolling moments at angles of attack just above the maximum lift are relatively unreliable owing to the critical and often unsymmetrical flow of the burbled air about the wing. Values of the lift coefficient are likewise erratic in this range, but at an angle of attack of 30° conditions are sufficiently stable to permit an agreement between the values of C_L obtained on the four wings tested within a total range of 5 per cent.

<u>Assumed control movements</u>.- The force tests were made with a sufficient number of spoiler and aileron deflections to give data for the four types of aileron movement used in the tests with the plain wing (reference 1, Part I): equal up-and-down, average differential (No. 1), extreme differential (No. 2), and upward movement only. The relative displacements of the two ailerons and the spoilers for these arrangements are given in Table II. In addition to these movements the standard ailerons when tested alone were given an equal up-and-down deflection of 50°, the short wide ailerons 40°, and both sizes of ailerons an extended differential movement of 50° up and 25° down. In the cases in which spoilers and ailerons are used in combination, the maximum deflection of the spoil-

er is taken as 90° and the movement is considered proportional to that of the up aileron.

The maximum deflection of spoiler A used alone was assumed to be 60°, the increase in rolling moment obtained with greater deflection being small.

Preliminary tests showed that with the right and left halves of the auxiliary airfoil deflected to give lateral control, moments of the proper sign and magnitude to give reasonable action at all angles of attack were obtained with one type of movement, down only; that is, the trailing edge of the auxiliary was lowered, which increased the angle of attack of the half of the auxiliary airfoil which was on the side of the wing on which the lift was reduced. A deflection of 45° was assumed as the maximum because, although at high angles of attack the rolling moments were still increasing with increased deflection, at the 0° angle of attack the rolling moments were slightly lower with a deflection of 45° than with one of 30°.

RESULTS

The force-test results are given in the form of absolute coefficients of lift and drag and of the rolling, yawing, and pitching moments:

$$C_L = \frac{\text{lift}}{q\ S}$$

$$C_D = \frac{\text{drag}}{q\ S}$$

$$C_l' = \frac{\text{rolling moment}}{q\ b\ S}$$

$$C_n' = \frac{\text{yawing moment}}{q\ b\ S}$$

$$C_{m_{c/4}}' = \frac{\text{pitching moment}}{q\ c\ S}$$

where S is the total area of the wing and auxiliary airfoil, b is the wing span, c is the chord of the main wing, and q is the dynamic pressure. The coefficients as given above are not corrected for tunnel-wall effect. They are obtained directly from the balance and refer to the wind (or tunnel) axes. In special cases in the discussion where the moments are used with reference to body

axes, the symbols are not primed. Thus the symbols for the rolling and yawing moment coefficients about body axes are C_l and C_n. Center of pressure, c.p., is given in percentage of main-wing chord.

The results of the forced-rotation tests are given, also about the wind axes, by a coefficient representing the rolling moment due to rolling:

$$C_\lambda = \frac{\lambda}{q\ b\ S}$$

where λ is the rolling moment measured while the wing is rolling, and the other factors have the usual significance. This coefficient may be used as a measure of the degree of lateral stability or instability of a wing under various rolling conditions. In the present case, it is used to indicate the characteristics of a wing when it is subjected to a rolling velocity equal to the maximum likely to be encountered in controlled flight in very gusty air. This rolling velocity may be expressed in terms of the wing span as

$$\frac{p'b}{2\ V} = 0.05$$

where V is the air speed at the center section of the wing, and p' is the angular velocity in roll about the wind axis.

The results of all the tests are given in Tables III to XII in terms of these coefficients.

DISCUSSION IN TERMS OF CRITERIONS

A series of criterions was developed in Part I (reference 1) for comparing the effect of various ailerons or other lateral control devices on the general performance of an airplane, on its lateral controllability, and on its lateral stability. The ailerons and spoilers used in the present tests with their various movements are compared with each other by means of these criterions in Table XIII. In addition, values are included from reference 1 for the standard ailerons on a plain Clark Y wing.

General Performance

(Controls Neutral)

Wing area required for desired landing speed.- The value of the maximum lift coefficient is used as a criterion of the wing area required for the desired landing speed or, conversely, for the landing speed obtained with a given wing area. The value of C_{Lmax} was substantially greater for the wings with auxiliary airfoils than for the plain Clark Y.

An interesting point happened to have been brought out by the tests with different fittings supporting the auxiliary airfoil. From Table XIII it will be noticed that the maximum lift coefficients were approximately the same for the first three wings with auxiliary airfoils, but that with wing No. 4, which had different fittings supporting the auxiliary airfoil, a higher maximum lift coefficient was obtained. The curves of C_L against α are shown for all four wings in Figure 3. The first three wings had wide fittings extending from the upper surface of the nose portion at the center of the span of the airfoil, whereas the fourth wing had supports extending from the lower surface. (See fig. 2.) An additional test was made with this wing (No. 4) equipped with a plate similar to those of the other wings in the center of the span, and with this arrangement the maximum lift coefficient dropped about halfway toward the values obtained with the first three wings, which partly explains the discrepancy. The wide fitting extending from the upper portion of the nose at the center of the span apparently induced burbling at a somewhat lower angle of attack and caused the entire wing to stall at a lower angle.

Speed range.- The ratio $\frac{C_{Lmax}}{C_{Dmin}}$ is a convenient figure of merit for comparing the effectiveness of different wings in giving a large speed range. The value of this ratio was found to be substantially higher with the wings with auxiliary airfoils than for the plain Clark Y alone.

Rate of climb.- In order to establish a suitable criterion for the effect of the wing and the lateral control devices on the rate of climb of an airplane, the performance curves of a number of types and sizes of airplanes were calculated, and the relation of the maximum rate of

climb to the lift and drag curves was studied. This investigation showed that the L/D at $C_L = 0.70$ gave a consistently reliable figure of merit for this purpose. This criterion is definitely lower for the wings with auxiliary airfoils than for the main wing alone. Reference to Figure 3 shows that the wing with an auxiliary airfoil is much more sensitive than the plain wing to climbing at angles of attack slightly greater than the best. As the angle of attack is increased the drag coefficient increases rapidly, which reduces the rate of climb of an airplane but which would enable it to make steep glides at the lower speeds, an advantage in landing over obstacles.

Lateral Controllability

(Controls Fully Deflected)

Rolling criterion.- The rolling criterion upon which the control effectiveness of each of the aileron arrangements is judged is a figure of merit that is designed to be proportional to the initial acceleration of the wing tip, following a deflection of the ailerons from neutral, regardless of the air speed or the wing plan form of an airplane. Expressed in coefficient form for a rectangular monoplane wing, the criterion becomes

$$RC = \frac{C_l}{C_L}$$

where C_l is the rolling-moment coefficient about the body axis due to the ailerons. The numerical value of this expression that has been found to represent satisfactory control conditions is approximately 0.075. A more detailed explanation of RC and its more general form, which is applicable to any wing plan form, is given in Part I.

The comparison of the ailerons on the basis of this criterion is given in Table XIII at four representative angles of attack; namely, 0°, 10°, 20°, and 30°. The first angle 0°, represents the high-speed attitude; $\alpha = 10°$ represents the highest angle of attack at which entirely satisfactory control with ordinary ailerons can be maintained on a plain wing; $\alpha = 20°$ represents the condition of greatest instability in rolling for the plain Clark Y wing, and is probably the greatest attainable angle of attack with most present-day airplanes in a steady

glide; and finally, $\alpha = 30^\circ$ is representative of the stalled condition with the combination wing and auxiliary airfoil.

At $\alpha = 0^\circ$ all the ailerons gave greater rolling moments than necessary for satisfactory control, the values being about the same as those given by the same ailerons on the wing without the auxiliary airfoil. (Reference 1, Part I.) Spoiler C located directly ahead of the ailerons reduced the effectiveness of the aileron somewhat at the 0° angle of attack but not enough to be of importance. Spoiler A gave a smaller value of RC than the ailerons alone or in combination with the other spoilers, but even so it was nearly 50 per cent in excess of the assumed satisfactory value. The auxiliary airfoil when deflected for lateral control, however, gave a value of RC which was less than one-third of the assumed satisfactory one.

At $\alpha = 10^\circ$ both sizes of ailerons gave values with all normal movements which were in the neighborhood of the assumed satisfactory value and which were approximately the same as those obtained with the same ailerons on the Clark Y wing alone. The combined ailerons and spoilers also gave satisfactory values of RC in most cases, but the values were from 4 per cent to 21 per cent lower than for the same control arrangements on a Clark Y wing alone. (Reference 1, Part V.) Spoiler A alone gave a value definitely below the assumed satisfactory one and about 20 per cent lower than that obtained on the plain Clark Y without an auxiliary airfoil. All these results indicate that the spoilers are less effective in the turbulent wake of an auxiliary airfoil* than in the smooth air flowing over the nose of a plain wing or behind a Handley Page slot. (Reference 1, Parts V and VII.) The value of RC obtained from the deflected auxiliary airfoil was somewhat higher at an angle of attack of 10° than at 0°,

*It has been shown by means of smoke flow as well as by separate measurements of the forces on the main wing and auxiliary airfoil that the auxiliary airfoil is stalled at angles of attack of the main wing above about 5°, indicating that the increase of $C_{L_{max}}$ obtained with an auxiliary airfoil is due largely to the effect of the turbulent wake from the auxiliary airfoil which tends to scour away the boundary layer over the main wing.

but was still less than half of the assumed satisfactory value.

At $\alpha = 20^\circ$, which is still below the stall with the auxiliary airfoil, the values of RC for the ailerons alone were somewhat higher with equal up-and-down deflection but lower with the extreme differential movements than for the same ailerons on the Clark Y wing alone which was definitely stalled at this angle of attack. None of the values for the ailerons alone operating on the wings with auxiliary airfoils were satisfactory but, as in the case of the plain wing, the closest approach was made with the short wide aileron. To find whether satisfactory values could be obtained with greater deflection, at the expense, of course, of much higher control forces, larger deflections were assumed as follows: equal up-and-down 50° with the standard size ailerons and 40° with the short wide ailerons; average differential movement (No. 1) with 50° up and 25° down for both sizes of ailerons; the criterions for these deflections which have been added to Table XIII show that satisfactory values of RC were obtained at 20° angle of attack with the short wide ailerons but not with the standard size ailerons.

Combining spoiler C with either size of aileron definitely improved the values of RC at the 20° angle of attack with the equal up-and-down and the average differential movements, the movements, it will be noticed, in which the maximum deflection of the up aileron is not great. The value of RC with spoiler C combined with the short wide ailerons having equal up-and-down deflection was only 5 per cent below the satisfactory value, a difference which is well within the limits within which the satisfactory value can be established. Spoiler D combined with the short wide ailerons gave satisfactory values of RC with all aileron movements except the up only. Spoiler A used alone, as at the 10° angle of attack, gave a value about 20 per cent below that obtained without the auxiliary airfoil or about 63 per cent of the satisfactory value. The value obtained by deflecting the auxiliary airfoil was higher than that obtained at 10° but still only about 55 per cent of the satisfactory value.

At $\alpha = 30^\circ$, which is above the stall of all the wing combinations, the ailerons alone gave values of RC much higher than the values obtained on the plain Clark Y wing but still well below the satisfactory value. The highest value obtained with the short wide ailerons with

the extreme differential movement was 63 per cent of the assumed satisfactory one. The same value was obtained with the average differential movement having the deflections increased to 50° up and 25° down. With the standard size ailerons the increased deflections gave lower values of RC than the original deflections, the highest of which was 43 per cent of the satisfactory value, and was obtained with the average differential movement. The addition of spoiler C to these ailerons increased this value to 52 per cent of the satisfactory one. When combined with the short wide ailerons spoiler C increased the value of RC slightly for equal up-and-down and average differential movement but reduced it for the other two movements. The addition of spoiler D to the short wide ailerons had practically no effect on the values of RC obtained at an angle of attack of 30°. Spoiler A alone gave a very small value of RC at this angle. It should be kept in mind that all the above-mentioned controls were mounted on wings 1, 2, and 3, which were well above the stall at an angle of attack of 30°. The deflected auxiliary airfoil on wing No. 4, which was just definitely above the stall at this angle of attack, held up fairly well with an RC as high as that obtained at an angle of attack of 10° but, like the values obtained at all the other angles of attack, it was but a small percentage of the assumed satisfactory value.

Lateral control with sideslip.- If a wing is yawed, a rolling moment is set up that tends to raise the forward tip with a moment that may be greater at very high angles of attack than the available rolling moment due to ailerons. The limiting angle of attack at which the ailerons can balance the rolling moment due to 20° yaw is taken as a criterion of control when the wing is yawed since this amount of yaw represents conditions in a fairly severe sideslip. This angle is tabulated as a criterion of control with sideslip.

Not all of the control combinations were tested in the yawed condition because some did not seem to be of sufficient interest. For the short wide ailerons alone the limiting angle of attack ranged from the stalling angle with equal up-and-down deflection of 25° to about 15° above the stall with the extreme differential and up-only movements. The angle was slightly higher with the same ailerons combined with either spoiler C or D. For spoiler A alone the limiting angle was 5° above the stall.

Yawing moment due to ailerons.- The desirable yawing moment due to ailerons varies to some extent with the type of airplane that is being considered. For a highly maneuverable military or acrobatic machine, complete independence of the controls as they affect the turning moments about the various body axes is no doubt a desirable feature. On the other hand, for large transport airplanes and for machines to be operated by relatively inexperienced pilots, a favorable yawing moment of the proper magnitude would probably be an appreciable aid to safe flying.

With the ailerons alone the yawing moment coefficients were not greatly different from those for the same ailerons on the Clark Y wing alone. The adverse values above the stall were slightly lower but were still very serious except with the extreme differential and up-only movements. The addition of either spoiler C or D eliminated the objectionable adverse yawing moments in practically all cases except for the 30° angle of attack which was well above the stall where the spoilers seemed to have but a small effect. It is probably safe to say that any desired yawing moment can be approximated at all angles of attack, including a few degrees beyond the stall, by the proper combination of ailerons and spoilers.

Spoiler A used alone gave large favorable values of C_n at all angles of attack up to 30° where a negative value of negligible magnitude was measured.

The deflected auxiliary airfoil gave large favorable values of C_n at all angles of attack up through 30°.

Lateral Stability

(Controls Neutral)

Inasmuch as all four wing models tested were of the same form within the limits of accuracy of construction with the controls neutral (except for the fittings supporting the auxiliary airfoil), the rotation tests on the lateral stability factor, damping in roll, were made with wing No. 1 only.

Angle of attack above which autorotation is self-starting.- This criterion is a measure of the range of angles of attack above which autorotation will start from an

initial condition of practically zero rate of rotation. The limiting angle of attack of the wing with the auxiliary airfoil was 22°, or 1° below the stalling angle. For the plain wing this angle was 19° or 2° above the stall.

Stability against rolling caused by gusts.- Test flights have shown that in severe gusts a rolling velocity such that $\frac{p'b}{2V} = 0.05$ may be obtained. Consequently, the rolling moment of a wing due to rolling at this value of $\frac{p'b}{2V}$ gives a measure of its stability characteristics in rough air. In the present case, the angle at which this rolling moment becomes zero is used as a more severe criterion than the previously mentioned angle at which autorotation is self-starting, to indicate the practical upper limit of the useful angle-of-attack range. With 0° yaw, the angle of attack for initial instability was the same as that found for free autorotation, 22°. With 20° yaw this angle, as in the case of the plain Clark Y wing, was 7° lower.

The above criterion shows the critical range below which stability is such that any rolling is damped out, and above which instability exists. The last criterion, maximum C_λ, indicates the degree of this instability. The value of C_λ depends in a very critical way on the exact shape of airfoil, and varies over a wide range for different airfoil models built to the same specified dimensions. With 0° yaw, wing No. 1 with the auxiliary airfoil had a maximum value of C_λ about midway between the extremes of the range found for several Clark Y wings alone. (See reference 1, Part I.)

The maximum autorotational moment with 20° yaw is of importance only in the condition in which the airplane is skidded and the forward wing tip is rolled upward or the rear tip downward by a gust. With 20° yaw the maximum value of C_λ was somewhat smaller for the wing with auxiliary airfoil than for any of the plain Clark Y wings tested to date.

Control Force Required

The hinge moments were not measured in the tests with the auxiliary airfoil because it was thought that they

would not differ greatly from the moments for the same ailerons and spoilers on the plain wing. This conclusion was based on the assumption that the distribution of load over the wing was essentially the same for the plain wing and the wing with auxiliary airfoil at angles of attack below the stall of the plain wing, and that the only marked difference in the flow was that the ailerons and spoilers on the wing with the auxiliary airfoil were operating in more turbulent air over a greater usable range of angles of attack than with the plain wing. The results for the various control devices tested on the plain wing (reference 1, Part V) indicate that with the proper combination of spoilers and ailerons it is possible to obtain very small control forces.

CONCLUSIONS

1. The general performance of the wings with auxiliary airfoils was substantially better in regard to maximum lift coefficient and speed range than that of the main wing alone, but was slightly poorer with respect to climb.

2. The control systems tested in which only ailerons were used did not give rolling control moments of an assumed satisfactory magnitude at all angles of attack up to the stall except at the expense of abnormally high deflections and very heavy hinge moments.

3. The most effective combination of ailerons and spoilers, the short wide ailerons combined with spoiler D, gave satisfactory values of the rolling control criterion RC at all angles of attack below the stall, and the values did not fall off rapidly as the angle of attack was increased above the stall. With control arrangements of this type having the proper relative proportions and linkage, it should be possible to obtain reasonably satisfactory yawing moments and control forces as well as satisfactory rolling moments.

4. The spoilers were found to be less effective on the wing with fixed auxiliary airfoil than on a wing without an auxiliary airfoil.

5. Deflecting one-half of the auxiliary airfoil downward for the purpose of control gave strong favorable yawing moments at all angles of attack. The rolling mo-

ments were low at low angles of attack but increased to about half the assumed satisfactory value near the stall.

Langley Memorial Aeronautical Laboratory,
National Advisory Committee for Aeronautics,
Langley Field, Va., January 26, 1933.

REFERENCES

1. Wind-Tunnel Research Comparing Lateral Control Devices, Particularly at High Angles of Attack.

I. Ordinary Ailerons on Rectangular Wings. T.R. No. 419, N.A.C.A., 1932, by Fred E. Weick and Carl J. Wenzinger.

II. Slotted Ailerons and Frise Ailerons. T.R. No. 422, N.A.C.A., 1932, by Fred E. Weick and Richard W. Noyes.

III. Ordinary Ailerons Rigged Up 10° When Neutral. T.R. No. 423, N.A.C.A., 1932, by Fred E. Weick and Carl J. Wenzinger.

IV. Floating Tip Ailerons on Rectangular Wings. T.R. No. 424, N.A.C.A., 1932, by Fred E. Weick and Thomas A. Harris.

V. Spoilers and Ailerons on Rectangular Wings. T.R. No. 439, N.A.C.A., 1932, by Fred E. Weick and Joseph A. Shortal.

VI. Skewed Ailerons on Rectangular Wings. T.R. No. 444, N.A.C.A, 1932, by Fred E. Weick and Thomas A. Harris.

VII. Handley Page Tip and Full-Span Slots with Ailerons and Spoilers. T.N. No. 443, N.A.C.A., 1933, by Fred E. Weick and Carl J. Wenzinger.

VIII. Straight and Skewed Ailerons on Wings with Rounded Tips. T.N. No. 445, N.A.C.A., 1933, by Fred E. Weick and Joseph A. Shortal.

IX. Tapered Wings with Ordinary Ailerons. T.N. No. 449, N.A.C.A., 1933, by Fred E. Weick and Carl J. Wenzinger.

2. Weick, Fred E., and Bamber, Millard J.: Wind-Tunnel Tests of a Clark Y Wing with a Narrow Auxiliary Airfoil in Different Positions. T.R. No. 428, N.A.C.A., 1932.

3. Harris, Thomas A.: The 7 by 10 Foot Wind Tunnel of the National Advisory Committee for Aeronautics. T.R. No. 412, N.A.C.A., 1931.

TABLE I

AIRFOIL ORDINATES

(All Values Given in per cent of Chord)

Clark Y Chord = 10.00 inches			Auxiliary airfoil Chord = 1.45 inches		
Station	Upper surface	Lower surface	Station	Upper surface	Lower surface
0	3.50	3.50	0	2.88	2.88
1.25	5.45	1.93	1.25	5.40	1.09
2.50	6.50	1.47	2.50	6.48	.65
5.00	7.90	.93	5.00	8.02	.28
7.50	8.85	.63	7.50	9.11	.08
10.00	9.60	.42	10.00	9.96	0
15.00	10.69	.15	15.00	11.34	.12
20.00	11.36	.03	20.00	12.29	.44
30.00	11.70	0	30.00	13.35	1.46
40.00	11.40	0	40.00	13.42	3.08
50.00	10.52	0	50.00	12.60	4.78
60.00	9.15	0	60.00	11.12	5.63
70.00	7.35	0	70.00	9.15	5.79
80.00	5.22	0	80.00	6.68	4.68
90.00	2.80	0	90.00	3.95	2.67
95.00	1.49	0	95.00	2.51	1.32
100.00	.12	0	100.00	1.13	0
L.E. radius = 1.50			L.E. radius = 2.00		

TABLE II

ASSUMED SIMULTANEOUS AILERON AND SPOILER DEFLECTION

Aileron and Spoiler Angles are Measured from Neutral

Equal up and down		
Aileron up degrees	Aileron down degrees	Spoiler up degrees
10	10	36
20	20	72
25	25	90

Average differential (No. 1)		
Aileron up degrees	Aileron down degrees	Spoiler up degrees
10	8.5	25.7
20	13	51.4
30	15	77.1
35	15	90

Up only		
Aileron up degrees		Spoiler up degrees
10		15
20		30
30		45
40		60
50		75
60		90

Extreme differential (No. 2)		
Aileron up Degrees	Aileron down Degrees	Spoiler up Degrees
10	7	18
20	12	36
30	14	54
40	11.5	72
50	7	90

TABLE III

FORCE TESTS. CLARK Y WING WITH AUXILIARY AIRFOIL (WING NO. 1)
25 PER CENT c BY 40 PER CENT b/2 AILERONS
R.N. = 609,000 Velocity = 80 m.p.h. Yaw = 0°

	δ_A Up	δ_A Dn	δ_S	-5°	-3°	0°	5°	10°	15°	18°	20°	22°	23°	24°	26°	28°	30°	35°	40°	50°	60°
α																					
Ailerons neutral																					
C_L	0°	0°	0°	-.025	0.113	0.321	0.666	0.954	1.227	1.389	1.474	1.558	1.584	1.231	1.083	0.947	0.938	0.879	0.838	0.751	0.622
C_D	0°	0°	0°	.023	.018	.033	.050	.138	.226	.293	.344	.400	.432	.455	.497	.528	.564	.645	.742	.924	1.064
$C_{m_{c/4}}$	0°	0°	0°	-.048	-.036	-.007	.031	.038	.062	.075	.079	.090	.093	.047	.029	.027	.026	.021	.013	-.017	-.041
c.p.	0°	0°	0°		57.1	27.2	20.5	21.0	19.9	19.6	19.7	19.3	19.2	21.2	22.5	22.5	22.6	23.0	23.9	26.5	26.3
Equal up-and-down																					
C_L'	10°	10°	0°			.035		.033			.028		.024	.014	.010	.007	.009	.006	.003		
C_n'	10°	10°	0°			-.003		-.009			-.013		-.014	-.013	-.012	-.008	-.008	-.007	-.006		
C_L'	30°	30°	0°			.072		.074			.073		.070	.051	.045	.009	.016	.021	.016		
C_n'	30°	30°	0°			-.006		-.020			-.032		-.035	-.037	-.032	-.031	-.017	-.021	-.021		
C_L'	40°	40°	0°			.088		.086			.080		.075	.056	.047	.010	.011	.022	.023		
C_n'	40°	40°	0°			-.006		-.021			-.034		-.037	-.039	-.032	-.031	-.017	-.023	-.026		
C_L'	50°	50°	0°			.101		.095			.086		.080	.060	.052	.006	.005	.007	.005		
C_n'	50°	50°	0°			-.006		-.022			-.037		-.039	-.040	-.033	-.031	-.018	-.021	-.021		
Average differential																					
C_L'	20°	17°	0°			.055		.058			.053		.047	.031	.030	-.006	.017	.014	.010		
C_n'	20°	17°	0°			-.005		-.014			-.022		-.024	-.024	-.022	-.021	-.014	-.015	-.014		
C_L'	30°	22.5°	0°			.067		.071			.070		.065	.047	.045	.009	.019	.021	.016		
C_n'	30°	22.5°	0°			-.003		-.016			-.027		-.030	-.032	-.028	-.028	-.017	-.018	-.018		
C_L'	40°	25°	0°			.077		.079			.078		.071	.014	.051	.014	.018	.023	.024		
C_n'	40°	25°	0°			-.001		-.015			-.027		-.030	-.029	-.028	-.027	-.014	-.018	-.021		
C_L'	50°	25°	0°			.087		.088			.083		.079	.060	.054	.020	.011	.010	.010		
C_n'	50°	25°	0°			.002		-.013			-.027		-.030	-.032	-.026	-.027	-.013	-.014	-.014		
Up-only																					
C_L'	10°	0°	0°			.017		.018			.017		.014	.005	.005	-.030	.007	.005	.001		
C_n'	10°	0°	0°			.000		-.004			-.006		-.007	-.006	-.006	-.005	-.005	-.004	-.002		
C_L'	20°	0°	0°			.030		.035			.036		.031	.019	.019	.010	.016	.011	.006		
C_n'	20°	0°	0°			.001		-.005			-.011		-.012	-.011	-.012	-.008	-.009	-.007	-.006		
C_L'	30°	0°	0°			.040		.044			.048		.045	.028	.034	-.003	.023	.017	.014		
C_n'	30°	0°	0°			.004		-.004			-.012		-.014	-.017	-.016	-.016	-.011	-.011	-.009		
C_L'	40°	0°	0°			.049		.052			.054		.052	.032	.039	.005	.022	.018	.022		
C_n'	40°	0°	0°			.006		-.002			-.010		-.012	-.014	-.014	-.014	-.009	-.008	-.011		
C_L'	50°	0°	0°			.057		.060			.062		.057	.038	.043	.016	.017	.007	.008		
C_n'	50°	0°	0°			.010		.000			-.010		-.012	-.014	-.013	-.007	-.006	-.005	-.005		
C_L'	60°	0°	0°			.062		.066			.068		.063	.045	.049	.019	.014	.004	.005		
C_n'	60°	0°	0°			.014		.003			-.008		-.010	-.013	-.011	-.012	-.006	-.005	-.005		

TABLE IV

FORCE TESTS. CLARK Y WING WITH AUXILIARY AIRFOIL (WING NO. 1)
10 PER CENT c BY 60 PER CENT b/2 SPOILER A
R.N. = 609,000 Velocity = 80 m.p.h. Yaw = 0°

	δ_A Up	δ_A Dn	δ_S	-5°	-3°	0°	5°	10°	15°	18°	20°	22°	23°	24°	26°	28°	30°	35°	40°	50°	60°
Spoiler A alone																					
C_L'	0°	0°	10°			0.003		0.004			0.005		0.001	-.005	-.006	-.040	-.003	-.001	0.000		
C_n'	0°	0°	10°			.001		.001			.002		.002	.001	.001	.002	.001	.001	.002		
C_L'	0°	0°	20°			.012		.024			.033		.024	.006	.005	-.001	-.002	-.003	-.004		
C_n'	0°	0°	20°			.005		.004			.000		.001	.001	.000	-.002	.000	.001	.002		
C_L'	0°	0°	40°			.028		.046			.061		.061	.044	.037	.004	.001	-.005	-.006		
C_n'	0°	0°	40°			.009		.007			-.002		-.004	-.006	-.006	-.003	-.002	.000	.002		
C_L'	0°	0°	60°			.035		.055			.074		.075	.059	.050	.012	.004	-.005	-.008		
C_n'	0°	0°	60°			.012		.009			.000		-.004	-.007	-.007	-.005	-.004	.001	.002		
C_L'	0°	0°	75°								.075		.081	.065							
C_n'	0°	0°	75°								.002		-.003	-.006							

TABLE V

FORCE TESTS. CLARK Y WING WITH AUXILIARY AIRFOIL (WING NO.1)
25 PER CENT c BY 40 PER CENT b/2 AILERONS
7 PER CENT c BY 40 PER CENT b/2 SPOILER C
R.N. = 609,000 Velocity = 80 m.p.h. Yaw = 0°

	δ_A Up	δ_A Dn	δ_S	-5°	-3°	0°	5°	10°	15°	18°	20°	22°	23°	24°	26°	28°	30°	35°	40°	50°	60°
Ailerons and spoiler C - Up-only																					
C_L'	0°	0°	20°			0.004		0.010			0.042		0.051	0.033	0.028	0.000	0.001	0.000	-.001		
C_n'	0°	0°	20°			.001		.003			.001		-.001	-.001	.000	-.001	.000	.000	.001		
C_L'	20°	0°	20°			.028		.041			.057		.061	.045	.046	.014	.014	.010	.007		
C_n'	20°	0°	20°			.002		-.003			-.006		-.008	-.010	-.009	-.007	-.008	-.007	-.007		
C_L'	40°	0°	20°			.043		.045			.060		.064	.047	.051	.017	.021	.018	.022		
C_n'	40°	0°	20°			.007		.002			-.005		-.008	-.009	-.007	-.007	-.008	-.008	-.013		
C_L'	60°	0°	20°			.054		.056			.066		.068	.052	.053	.017	.010	-.001	.004		
C_n'	60°	0°	20°			.013		.004			-.003		-.006	-.008	-.006	-.005	-.006	-.005	-.004		
C_L'	0°	0°	40°			.005		.026			.050		.058	.045	.041	.008	.002	-.001	.001		
C_n'	0°	0°	40°			.004		.007			.003		-.001	-.003	-.002	-.003	-.002	-.001	.000		
C_L'	20°	0°	40°			.023		.048			.065		.072	.055	.055	.022	.017	.009	.006		
C_n'	20°	0°	40°			.004		.002			-.004		-.007	-.008	-.009	-.010	-.010	-.007	-.007		
C_L'	40°	0°	40°			.033		.048			.067		.075	.058	.056	.023	.023	.017	.022		
C_n'	40°	0°	40°			.007		.004			-.003		-.005	-.007	-.007	-.008	-.009	-.008	-.012		
C_L'	60°	0°	40°			.042		.057			.069		.073	.057	.054	.012	.009	.002	.006		
C_n'	60°	0°	40°			.012		.007			-.002		-.004	-.006	-.006	-.007	-.007	-.005	-.006		
C_L'	40°	0°	60°			.029		.050			.070		.077	.060	.058	.026	.023	.015	.021		
C_n'	40°	0°	60°			.008		.006			-.002		-.005	-.008	-.008	-.010	-.010	-.008	-.012		
C_L'	60°	0°	60°			.037		.057			.072		.074	.057	.052	.014	.010	.002	.005		
C_n'	60°	0°	60°			.011		.008			-.002		-.004	-.006	-.006	-.007	-.008	-.005	-.005		
C_L'	40°	0°	90°			.029		.051			.069		.075	.060	.064	.032	.022	.011	.018		
C_n'	40°	0°	90°			.009		.006			-.003		-.007	-.009	-.009	-.012	-.011	-.008	-.013		
C_L'	60°	0°	90°			.036		.056			.069		.070	.053	.054	.018	.009	-.009	.003		
C_n'	60°	0°	90°			.012		.008			-.002		-.006	-.008	-.007	-.008	-.008	-.004	-.005		

TABLE VI. FORCE TESTS. CLARK Y WING WITH AUXILIARY AIRFOIL (WING NO. 1)
35 PER CENT c BY 40 PER CENT b/2 AILERONS
R.N. = 609,000 Velocity = 80 m.p.h. Yaw = -20°

	δ_A Up	δ_A Dn.	δ_S	-5°	-3°	0°	5°	10°	15°	18°	20°	22°	23°	24°	26°	28°	30°	35°	40°	50°	60°
				Ailerons and spoiler neutral																	
C_L	0°	0°	0°	-0.028	0.098	0.292	0.622	0.870	1.122	1.270	1.354	1.419	1.459	1.297	1.315	1.175	1.084	1.019	0.866	0.765	0.637
C_D	0°	0°	0°	.024	.022	.026	.048	.118	.200	.258	.299	.347	.375	.417	.476	.539	.583	.670	.721	.885	1.030
C_l'	0°	0°	0°	-.002	.000	.000	-.003	-.009	-.013	-.016	-.021	-.022	-.029	-.058	-.070	-.071	-.059	-.047	-.046	-.031	-.027
C_n'	0°	0°	0°	.001	.001	.001	.001	.002	.007	.010	.012	.014	.015	.017	.020	.023	.032	.038	.040	.037	.041
				Ailerons alone - Equal up-and-down																	
C_l'	50°	50°	0°			.089		.094			.096		.096	.084	.066	.077	.057	.019	.015		
C_n'	50°	50°	0°			-.006		-.021			-.037		-.041	-.039	-.041	-.044	-.046	-.029	-.026		
				Ailerons alone - Average differential																	
C_l'	50°	25°	0°			.082		.088			.091		.084	.083	.084	.077	.061	.018	.015		
C_n'	50°	25°	0°			.002		-.012			-.025		-.030	-.030	-.033	-.036	-.035	-.022	-.020		
				Ailerons alone Up-only																	
C_l'	60°	0°	0°			.059		.068			.077		.081	.107	.077	.072	.059	.028	.013		
C_n'	60°	0°	0°			.013		.002			-.009		-.013	-.015	-.018	-.021	-.022	-.017	-.010		
				Ailerons and spoiler C - Up-only																	
C_l'	60°	0°	90°			.054		.065			.080		.088	.114	.088	.082	.059	.039	.011		
C_n'	60°	0°	90°			.018		.011			.000		-.004	-.005	-.010	-.011	-.020	-.020	-.010		
				Spoiler A - Alone																	
C_l'	0°	0°	60°			.015		.034			.059		.072	.101	.096	.060	.039	.013	-.004		
C_n'	0°	0°	60°			.012		.012			.004		-.001	-.002	.001	-.008	-.014	-.011	.000		

TABLE VII. ROTATION TESTS. CLARK Y WING WITH AUXILIARY AIRFOIL (WING NO. 1)
35 PER CENT c BY 40 PER CENT b/2 AILERONS SET NEUTRAL

C_λ IS GIVEN FOR FORCED ROTATION AT $\frac{p'b}{2V} = 0.06$ (+) AIDING ROTATION (-) DAMPING ROTATION

$\frac{p'b}{2V}$ VALUES ARE FOR FREE ROTATION

R.N. = 609,000 Velocity = 80 m.p.h.

α		0°	12°	18°	20°	21°	22°	23°	24°	25°	26°	27°	28°	29°	30°	32°	35°	40°	50°
								Yaw = 0°											
+ Rotation	C_λ	-.022	-.020	-.020	-.019	-.019	0.006	0.006	0.025	0.031	0.035	0.036	0.024	0.015	0.018	0.008	0.000	-.001	
(Clockwise)	$\frac{p'b}{2V}$						.080	.312	.332	.349	.360		.372		.398	.426	.455	.497	0.065
- Rotation	C_λ	-.022	-.020	-.019	-.016	-.015	-.003	-.002	.013	.015	.018	.038	.038	.013	.014	.013	.010	.005	
(Counterclockwise)	$\frac{p'b}{2V}$							.291	.328	.344	.348		.364		.359	.382	.459	.379	.178
								Yaw = -20°											
+ Rotation (Clockwise)	C_λ	-.022	-.033		-.049		-.043		-.031		-.049		-.048		-.050	-.048	-.038	-.042	
- Rotation (Counterclockwise)	C_λ	-.017	-.003		.010		.042		.048		.064		.058		.059	.060	.065	.043	

TABLE VIII. FORCE TESTS. CLARK Y WING WITH AUXILIARY AIRFOIL (WING NO. 2)
40 PER CENT c BY 30 PER CENT b/2 AILERONS
R.N. = 609,000 Velocity = 80 m.p.h. $\gamma_{sw} = 0^\circ$

α				-5°	-3°	0°	5°	10°	15°	18°	20°	22°	23°	24°	26°	28°	30°	35°	40°	50°	60°
	δ_A Up	δ_A Dn	δ_S																		
				Ailerons neutral																	
C_L	0°	0°	0°	-0.031	0.118	0.336	0.691	0.963	1.340	1.386	1.482	1.557	1.587	1.117	1.087	0.982	0.963	0.887	0.847	0.746	0.623
C_D	0°	0°	0°	.023	.018	.024	.051	.139	.239	.295	.351	.405	.432	.481	.499	.536	.577	.653	.751	.923	1.094
$C_{m_{c/4}}$	0°	0°	0°	-.050	-.038	-.008	.031	.037	.058	.072	.081	.087	.088	.031	.026	.024	.024	.020	.010	-.017	-.046
c.p.	0°	0°	0°		55.8	26.8	20.6	21.3	20.4	19.8	19.6	19.6	19.6	22.4	22.7	22.9	22.9	23.5	24.0	26.5	28.7
				Equal up-and-down																	
C_L'	20°	20°	0°			.061		.083			.060	.056	.056	.038	[a].034	[b].030	.018		.007		
C_n'	20°	20°	0°			-.006		-.018			-.030	.038	-.033	-.029	[a]-.029	[b]-.025	-.020		-.016		
C_L'	25°	25°	0°			.071		.077			.075		.071	.046	.027	.016	.022	.014	.009		
C_n'	25°	25°	0°			-.006		-.022			-.038		-.042	-.036	-.033	-.031	-.023	-.017	-.020		
C_L'	30°	30°	0°			.081		.084			.087		.083	.056	.034	.023	.024	.017	.011		
C_n'	30°	30°	0°			-.006		-.023			-.044		-.049	-.040	-.036	-.034	-.027	-.020	-.024		
C_L'	40°	40°	0°			.090		.098			.099		.096	.066	.043	.033	.024	.022	.016		
C_n'	40°	40°	0°			-.006		-.023			-.045		-.053	-.041	-.038	-.037	-.028	-.026	-.029		
C_L'	50°	50°	0°			.100		.102			.100		.098								
C_n'	50°	50°	0°			-.005		-.020			-.041		-.048								
				Average differential																	
C_L'	10°	8.5°	0°			.031		.032			.028		.025	.017	.001	.009	.009	.004	.003		
C_n'	10°	8.5°	0°			-.003		.008			-.014		-.015	-.014	-.013	-.009	-.010	-.004	-.007		
C_L'	20°	13°	0°			.052		.055			.051		.050	.035	.018	.007	.018	.010	.007		
C_n'	20°	13°	0°			-.002		-.012			-.022		-.025	-.023	-.022	-.021	-.017	-.009	-.013		
C_L'	30°	15°	0°			.065		.073			.071		.067	.052	.036	.024	.022	.018	.014		
C_n'	30°	15°	0°			.001		-.013			-.026		-.030	-.027	-.027	-.027	-.021	-.014	-.017		
C_L'	35°	15°	0°			.071		.079			.078		.075	.060	.043	.031	.035	.023	.018		
C_n'	35°	15°	0°			.004		-.010			-.025		-.030	-.027	-.028	-.028	-.022	-.016	-.019		
				Extreme differential																	
C_L'	10°	7°	0°			.029		.029			.026		.025	.017	.000	.010	.009	.004	.003		
C_n'	10°	7°	0°			-.002		-.007			-.013		-.013	-.018	-.013	-.018	-.009	-.004	-.007		
C_L'	20°	12°	0°			.051		.054			.051		.047	.035	.018	.007	.018	.010	.008		
C_n'	20°	12°	0°			-.003		-.013			-.022		-.024	-.022	-.022	-.021	-.017	-.010	-.012		
C_L'	30°	14°	0°			.064		.070			.070		.066	.052	.034	.023	.029	.018	.013		
C_n'	30°	14°	0°			.002		-.011			-.024		-.028	-.026	-.026	-.025	-.021	-.014	-.016		
C_L'	40°	11.5°	0°			.071		.082			.084		.078	.065	.048	.038	.039	.026	.020		
C_n'	40°	11.5°	0°			.007		-.005			-.020		-.023	-.022	-.024	-.024	-.021	-.016	-.018		
C_L'	50°	7°	0°			.069		.085			.090		.089	.074	.058	.049	.043	.028	.028		
C_n'	50°	7°	0°			.012		.003			-.013		-.017	-.016	-.018	-.020	-.017	-.011	-.017		
				Up-only																	
C_L'	10°	0°	0°			.017		.018			.018	.017	.016	.011	[a].012	[b].011	.008		.003		
C_n'	10°	0°	0°			.000		-.004			-.007	-.007	-.006	-.007	[a]-.007	[b]-.007	-.006		-.004		
C_L'	20°	0°	0°			.033		.036			.036	.034	.034	.027	[a].026	.025	.016		.006		
C_n'	20°	0°	0°			.001		-.004			-.012	-.012	-.013	-.012	[a]-.013	[b]-.013	-.010		-.007		
C_L'	30°	0°	0°			.047		.061			.055	.053	.052	.044	[a].042	[b].042	.027		.011		
C_n'	30°	0°	0°			.006		-.003			-.013	-.015	-.016	-.016	[a]-.016	[b]-.018	-.014		-.010		
C_L'	40°	0°	0°			.056		.067			.070		.068	.060	.058	.036	.038	.025	.019		
C_n'	40°	0°	0°			.011		.003			-.011		-.014	-.014	-.016	-.018	-.016	-.010	-.013		
C_L'	50°	0°	0°			.057		.074			.082		.080	.068	.068	.047	.040	.025	.025		
C_n'	50°	0°	0°			.014		.006			-.007		-.011	-.010	-.013	-.015	-.013	-.006	-.013		
C_L'	60°	0°	0°			.061		.073			.086		.085	.071	.070	.049	.043	.013	.018		
C_n'	60°	0°	0°			.016		.009			-.004		-.013	-.008	-.009	-.012	-.012	-.006	-.010		

[a] $\alpha = 25^\circ$ [b] $\alpha = 27^\circ$

TABLE IX

FORCE TESTS. CLARK Y WING WITH AUXILIARY AIRFOIL (WING NO. 2)

40 PER CENT c BY 30 PER CENT b/2 AILERONS - 7 PER CENT c BY 40 PER CENT b/2 SPOILER C

R.N. = 609,000 Velocity = 80 m.p.h. Yaw = 0°

α				-5°	-3°	0°	5°	10°	20°	22°	23°	24°	26°	28°	30°	35°	40°	50°	60°
	δ_A Up	δ_A Dn.	δ_S	Ailerons and spoiler C - Up-only															
C_l'	0°	0°	20°			0.004		0.013	0.047		0.055	0.035	0.020	0.004	0.003	0.004	0.002		
C_n'	0°	0°	20°			.002		.004	.001		-.002	-.001	-.001	.000	-.001	.003	-.002		
C_l'	20°	0°	20°			.033		.043	.059		.044	.043	.039	.019	.016	.009	.007		
C_n'	20°	0°	20°			.003		-.001	-.006		-.007	-.007	-.008	-.008	-.009	-.004	-.007		
C_l'	40°	0°	20°			.050		.062	.080		.083	.062	.052	.040	.037	.020	.020		
C_n'	40°	0°	20°			.011		.005	-.007		-.010	-.008	-.011	-.012	-.015	-.009	-.013		
C_l'	60°	0°	20°			.059		.073	.092		.094	.086	.069	.047	.038	.014	.019		
C_n'	60°	0°	20°			.019		.012	-.003		-.008	-.010	-.007	-.010	-.012	-.005	-.010		
C_l'	0°	0°	40°			.005		.019	.052		.062	.039	.022	.012	.008	.003	.004		
C_n'	0°	0°	40°			.004		.007	.002		.000	-.001	-.003	-.003	-.004	.003	-.002		
C_l'	20°	0°	40°			.032		.050	.065		.046	.047	.039	.023	.019	.008	.006		
C_n'	20°	0°	40°			.004		.002	-.006		-.009	-.010	-.010	-.012	-.014	-.008	-.010		
C_l'	40°	0°	40°			.047		.068	.082		.068	.063	.064	.041	.038	.023	.020		
C_n'	40°	0°	40°			.012		.006	-.005		-.008	-.008	-.010	-.012	-.015	-.010	-.014		
C_l'	60°	0°	40°			.053		.076	.093		.069	.068	.068	.044	.035	.014	.020		
C_n'	60°	0°	40°			.019		.012	-.002		-.007	-.005	-.006	-.010	-.012	-.005	-.010		
C_l'	40°	0°	60°			.043		.067	.084		.087	.063	.065	.044	.037	.022	.019		
C_n'	40°	0°	60°			.012		.007	-.004		-.008	-.007	-.009	-.013	-.015	-.010	-.013		
C_l'	60°	0°	60°			.050		.075	.093		.094	.068	.067	.044	.033	.012	.018		
C_n'	60°	0°	60°			.019		.012	-.002		-.006	-.005	-.006	-.009	-.011	-.005	-.010		
C_l'	40°	0°	90°			.042		.069	.083		.088	.065	.064	.044	.038	.019	.017		
C_n'	40°	0°	90°			.011		.007	-.005		-.009	-.008	-.009	-.014	-.016	-.010	-.013		
C_l'	60°	0°	90°			.049		.072	.091		.094	.067	.067	.041	.031	.011	.017		
C_n'	60°	0°	90°			.018		.011	-.003		-.007	-.006	-.006	-.010	-.012	-.005	-.010		

TABLE X

FORCE TESTS. CLARK Y WING WITH AUXILIARY AIRFOIL (WING NO. 3)

40 PER CENT c BY 30 PER CENT b/2 AILERONS - 15 PER CENT c BY 10 PER CENT b/2 SPOILER D

R.N. = 609,000 Velocity = 80 m.p.h. Yaw = 0°

α				-5	-3	0	5	10	20	22	23	24	26	28	30	35	40	50	60
	δ_A Up	δ_A Dn	δ_S	Ailerons and spoiler neutral															
C_L	0°	0°	0°	-0.047	0.111	0.324	0.698	0.969	1.489	1.574	1.611	1.130	1.073	0.980	0.982	0.889	0.850	0.755	0.625
C_D	0°	0°	0°	.027	.018	.024	.052	.139	.345	.406	.434	.456	.498	.538	.576	.649	.748	.923	1.080
$C_{m_{c/4}}$	0°	0°	0°	-.053	-.043	-.017	.024	.031	.070	.073	.075	.027	.025	.022	.019	.015	.004	-.023	-.051
c.p.	0°	0°	0°		63.7	30.2	21.6	21.8	20.3	20.4	20.4	22.8	22.9	23.0	23.3	23.6	24.6	26.9	29.1
				Ailerons and spoiler D - Up-only															
C_l'	10°	0°	15°			.019		.023	.046		.022		.013	.006	.008	.005	.003		
C_n'	10°	0°	15°			.000		-.003	-.006		-.008		-.008	-.006	-.006	-.004	-.004		
C_l'	10°	0°	30°			.020		.035	.051		.053		.017	.007	.008	.005	.003		
C_n'	10°	0°	30°			.001		-.001	-.006		-.010		-.009	-.006	-.006	-.005	-.004		
C_l'	20°	0°	30°			.036		.051	.069		.069		.032	.015	.017	.010	.007		
C_n'	20°	0°	30°			.002		-.003	-.011		-.015		-.014	-.013	-.011	-.009	-.008		
C_l'	10°	0°	45°			.020		.042	.054		.053		.018	-.002	.008	.005	.002		
C_n'	10°	0°	45°			.001		-.001	-.006		-.010		-.009	-.010	-.006	-.005	-.004		
C_l'	20°	0°	45°			.036		.057	.072		.070		.034	.012	.018	.008	.006		
C_n'	20°	0°	45°			.003		-.002	-.012		-.015		-.015	-.016	-.012	-.008	-.008		
C_l'	30°	0°	45°			.046		.070	.088		.068		.051	.028	.027	.016	.012		
C_n'	30°	0°	45°			.007		.000	-.013		-.018		-.018	-.020	-.014	-.011	-.010		
C_l'	20°	0°	60°			.036		.059	.073		.073		.035	.021	.019	.008	.007		
C_n'	20°	0°	60°			.004		-.002	-.011		-.015		-.015	-.016	-.011	-.008	-.008		
C_l'	40°	0°	60°			.053		.080	.102		.101		.064	.041	.039	.022	.017		
C_n'	40°	0°	60°			.012		.003	-.010		-.015		-.017	-.020	-.016	-.013	-.013		
C_l'	60°	0°	60°			.062		.086	.111		.114		.076	.052	.044	.016	.016		
C_n'	60°	0°	60°			.019		.010	-.003		-.009		-.011	-.014	-.012	-.009	-.009		
C_l'	0°	0°	90°			.015		.026	.036		.014		.006	.001	.001	.002	-.001		
C_n'	0°	0°	90°			.003		.003	.001		-.001		-.001	-.001	-.001	-.001	.000		
C_l'	25°	0°	90°			.050		.064	.078		.055		.042	.028	.023	.013	.008		
C_n'	25°	0°	90°			.007		-.003	-.012		-.016		-.017	-.014	-.013	-.010	-.009		
C_l'	35°	0°	90°			.057		.079	.091		.084		.058	.038	.033	.020	.015		
C_n'	35°	0°	90°			.012		.001	-.012		-.017		-.019	-.017	-.016	-.012	-.012		
C_l'	50°	0°	90°			.063		.085	.104		.094		.073	.049	.043	.024	.022		
C_n'	50°	0°	90°			.016		.007	-.006		-.011		-.014	-.012	-.013	-.011	-.012		
C_l'	60°	0°	90°			.065		.087	.108		.095		.075	.052	.045	.018	.017		
C_n'	60°	0°	90°			.021		.011	-.003		-.006		-.010	-.011	-.012	-.009	-.009		

TABLE XI

FORCE TESTS. CLARK Y WING WITH AUXILIARY AIRFOILS

40 PER CENT c BY 30 PER CENT b/2 AILERONS

R.N. = 609,000 Velocity = 80 m.p.h. Yaw = -20°

α	δ_A Up	δ_A Dn	δ_S	-5°	-3°	0°	5°	10°	15°	18°	20°	22°	23°	24°	26°	28°	30°	35°	40°	50°	60°
Ailerons and spoiler neutral (wing No. 2)																					
C_L	0°	0°	0°	-0.017	0.113	0.316	0.636	0.877	1.131	1.265	1.359	1.244	1.275	1.280	1.216	1.096	1.061	1.001	0.876	0.758	0.629
C_D	0°	0°	0°	.024	.021	.027	.049	.131	.199	.257	.306	.368	.395	.422	.495	.546	.595	.663	.728	.883	1.035
C_l'	0°	0°	0°	-.004	-.002	-.002	-.005	-.010	-.016	-.019	-.023	-.059	-.063	-.066	-.041	-.060	-.058	-.037	-.045	-.031	-.028
C_n'	0°	0°	0°	.001	.001	.001	.002	.004	.009	.013	.015	.018	.019	.019	.028	.030	.033	.039	.042	.039	.043
Ailerons alone - Equal up-and-down (wing No. 2)																					
C_l'	25°	25°	0°			.071		.075			.071		.060	.058	.025	.037	.037	-.007	.013		
C_n'	25°	25°	0°			-.005		-.023			-.035		-.034	-.035	-.041	-.040	-.038	-.020	-.022		
C_l'	40°	40°	0°			.093		.103			.103		.089	.087	.053	.063	.056	.013	.017		
C_n'	40°	40°	0°			-.002		-.024			-.049		-.042	-.045	-.052	-.051	-.051	-.034	-.035		
Ailerons alone - Average differential (wing No. 2)																					
C_l'	35°	15°	0°			.077		.081			.078		.072	.070	.039	.053	.050	.007	.016		
C_n'	35°	15°	0°			.006		-.010			-.026		-.028	-.030	-.038	-.039	-.037	-.026	-.025		
Ailerons alone - Extreme differential (wing No. 2)																					
C_l'	50°	7°	0°			.072		.096			.098		.094	.095	.062	.076	.069	.054	.034		
C_n'	50°	7°	0°			.017		.005			-.013		-.019	-.020	-.029	-.031	-.034	-.032	-.026		
Ailerons alone - Up-only (wing No. 2)																					
C_l'	60°	0°	0°			.061		.085			.108		.109	.108	.077	.089	.063	.068	.042		
C_n'	60°	0°	0°			.019		.012			-.001		-.008	-.010	-.020	-.022	-.026	-.022	-.021		
Ailerons and spoiler C - Equal up-and-down (wing No. 2)																					
C_l'	25°	25°	90°			.072		.087			.096		.134		.091	.084	.052	.025	.003		
C_n'	25°	25°	90°			.002		-.012			-.026		-.028		-.026	-.021	-.031	-.027	-.020		
Ailerons and spoiler C - Average differential (wing No. 2)																					
C_l'	35°	15°	90°			.076		.090			.100		.139		.101	.101	.065	.043	.015		
C_n'	35°	15°	90°			.013		.000			-.018		-.022		-.026	-.029	-.031	-.031	-.022		
Ailerons and spoiler C - Extreme differential (wing No. 2)																					
C_l'	50°	7°	90°			.066		.104			.116		.154		.116	.117	.082	.063	.033		
C_n'	50°	7°	90°			.020		.014			-.005		-.012		-.018	-.022	-.029	-.032	-.024		
Ailerons and spoiler C - Up-only (wing No. 2)																					
C_l'	60°	0°	90°			.058		.087			.110		.118	.119	.092	.106	.102	.074	.044		
C_n'	60°	0°	90°			.025		.019			.002		-.004	-.006	-.016	-.013	-.015	-.022	-.022		
Ailerons and spoiler neutral (wing No. 3)																					
C_L	0°	0°	0°	-.038		.292		.863			1.358	1.438	1.252	1.274	1.319	1.337	1.065	1.014	.871	.770	.638
C_D	0°	0°	0°	.027		.026		.118			.298	.343	.389	.414	.473	.518	.561	.667	.719	.874	.965
C_l'	0°	0°	0°	-.002		-.002		-.010			-.022	-.027	-.066	-.064	-.072	-.077	-.055	-.052	-.053	-.032	-.031
C_n'	0°	0°	0°	.001		.001		.003			.015	.017	.018	.018	.022	.025	.043	.042	.045	.041	.045
Ailerons and spoiler D - Equal up-and-down (wing No. 3)																					
C_l'	25°	25°	90°			.071		.083			.080		.098		.067	.062	.033	.013	.001		
C_n'	25°	25°	90°			-.002		-.018			-.032		-.030		-.026	-.026	-.044	-.029	-.020		
Ailerons and spoiler D - Average differential (wing No. 3)																					
C_l'	35°	15°	90°			.078		.086			.088		.108		.078	.077	.050	.031	.011		
C_n'	35°	15°	90°			.010		-.006			-.022		-.023		-.023	-.024	-.042	-.034	-.023		
Ailerons and spoiler D - Extreme differential (wing No. 3)																					
C_l'	50°	7°	90°			.067		.104			.109		.111		.104	.103	.076	.055	.030		
C_n'	50°	7°	90°			.016		.009			-.009		-.013		-.015	-.018	-.037	-.034	-.025		
Ailerons and spoiler D - Up-only (wing No. 3)																					
C_l'	60°	0	90°			.061		.085			.118		.123		.118	.120	.095	.073	.044		
C_n'	60°	0	90°			.022		.013			.003		-.003		-.005	-.009	-.028	-.028	-.020		

TABLE XII

FORCE TESTS. CLARK Y WING WITH AUXILIARY AIRFOIL (WING NO. 4)

AUXILIARY AIRFOIL MOVABLE FOR CONTROL

R.N. = 609,000 Velocity = 80 m.p.h. Yaw = 0°

α	δ_L	δ_R	-5°	-3°	0°	5°	10°	15°	20°	24°	25°	26°	27°	28°	30°	35°	40°	50°	60°
Auxiliary airfoil neutral																			
C_L	0°	0°	-0.032	0.120	0.344	0.706	0.985	1.245	1.498	1.655	1.686	1.709	1.733	1.030	0.980	0.903	0.849	0.760	0.631
C_D	0°	0°	.024	.018	.024	.052	.138	.224	.346	.485	.493	.529	.557	.539	.577	.657	.750	.932	1.092
$C_{m_{c/4}}'$	0°	0°	-.054	-.038	-.014	.038	.032	.054	.075	.066	.066	.088	.089	.017	.017	.013	.003	-.025	-.055
c.p.	0°	0°	160.0	56.6	29.1	21.0	21.8	20.7	20.1	20.0	20.1	20.1	20.1	25.5	23.5	23.8	24.7	27.0	29.4
Right auxiliary airfoil up																			
C_l'	0°	-10°			.078		-.035		.044		.157				-.079				
C_n'	0°	-10°			.000		-.006		-.009		-.009				-.005				
C_l'	0°	-20°			.012		.002		.000		.140				.010				
C_n'	0°	-20°			.002		-.006		-.012		-.014				-.014				
Right auxiliary airfoil down																			
C_l'	0°	5°			.002		.004		.004		.006				-.005				
C_n'	0°	5°			.000		.001		.002		.002				.003				
C_l'	0°	15°			.009		.010		.014		.017				.002				
C_n'	0°	15°			.004		.005		.008		.007				.004				
C_l'	0°	30°			.012		.021		.041		.088				.022				
C_n'	0°	30°			.005		.011		.013		.007				.004				
C_l'	0°	45°			.008		.033		.070		.039				.037				
C_n'	0°	45°			.007		.012		.012		.007				.003				

TABLE XIII

CRITERIONS SHOWING RELATIVE MERITS OF SEVERAL CONTROL SYSTEMS ON A CLARK Y WING WITH AUXILIARY AIRFOIL

SUBJECT	CRITERION	PLAIN CLARK Y				CLARK Y WING WITH AUXILIARY AIRFOIL																									
		Standard Ailerons				Standard Ailerons (wing No. 1)						Short Wide Ailerons (wing No. 2)						Standard Ailerons and Spoiler 0 (Wing No. 1)				Short Wide Ailerons and Spoiler 0 (wing No. 2)				Short Wide Ailerons and Spoiler D (wing No. 3)				Spoiler A (wing No. 1)	Movable auxiliary (wing No. 4)
		Standard δ_A= 25° up 25° dn	Differential No. 1 δ_A= 35° up 15° dn	Differential No. 2 δ_A= 50° up 7° dn	Up only 60°	Standard δ_A= 25° up 25° dn	Differential No. 1 δ_A= 35° up 15° dn	Differential No. 2 δ_A= 50° up 7° dn	Up only 60°	δ_A= 50° up 50° dn	δ_A= 50° up 25° dn	Standard δ_A= 25° up 25° dn	Differential No. 1 δ_A= 35° up 15° dn	Differential No. 2 δ_A= 50° up 7° dn	Up only 60°	δ_A= 40° up 40° dn	δ_A= 50° up 25° dn	Standard δ_A= 25° up 25° dn δ_S= 90°	Differential No. 1 δ_A= 35° up 15° dn δ_S=90°	Differential No. 2 δ_A= 50° up 7° dn δ_S=90°	Up only δ_A= 60° δ_S= 90°	Standard δ_A= 25° up 25° dn δ_S= 90°	Differential No. 1 δ_A= 35° up 15° dn δ_S=90°	Differential No. 2 δ_A= 50° up 7° dn δ_S=90°	Up only δ_A= 60° δ_S= 90°	Standard δ_A= 25° up 25° dn δ_S= 90°	Differential No. 1 δ_A= 35° up 15° dn δ_S=90°	Differential No. 2 δ_A= 50° up 7° dn δ_S=90°	Up only δ_A= 60° δ_S= 90°	δ_S=60°	Right 45° dn. left 0°
Wing area or minimum speed	$C_{L_{max}}$ (δ_A and δ_S =0°)	1.270	1.270	1.270	1.270	1.584	1.584	1.584	1.584	1.584	1.584	1.587	1.587	1.587	1.587	1.587	1.587	1.584	1.584	1.584	1.584	1.587	1.587	1.587	1.587	1.611	1.611	1.611	1.611	1.584	1.733
Speed range	$C_{L_{max}}/C_{D_{min}}$ (δ_A and δ_S =0°)	79.4	79.4	79.4	79.4	88.1	88.1	88.1	88.1	88.1	88.1	88.2	88.2	88.2	88.2	88.2	88.2	88.1	88.1	88.1	88.1	88.2	88.2	88.2	88.2	89.5	89.5	89.5	89.5	88.1	94.7
Rate of climb	L/D at C_L =0.70 (δ_A and δ_S =0°)	15.9	15.9	15.9	15.9	13.4	13.4	13.4	13.4	13.4	13.4	13.4	13.4	13.4	13.4	13.4	13.4	13.4	13.4	13.4	13.4	13.4	13.4	13.4	13.4	13.4	13.4	13.4	13.4	13.4	13.6
Lateral controllability	RO α = 0°	.204	.208	.214	.196	.200	.206	.222	.192	.315	.271	.212	.210	.206	.181	.269	.282	.169	.156	.145	.113	.211	.185	.169	.145	.259	.243	.227	.200	.108	.083
	RO α =10°	.078	.074	.074	.072	.073	.078	.075	.067	.103	.094	.090	.083	.068	.072	.104	.113	.088	.074	.068	.066	.097	.090	.082	.072	.100	.108	.096	.096	.063	.031
	RO α =20°	.038	.031	.055	.064	.047	.048	.048	.046	.053	.059	.056	.066	.060	.055	.073	.079	.063	.058	.051	.045	.071	.065	.054	.038	.075	.074	.074	.069	.047	.041
	RO α =30°	.017	.006	.002	.003	.031	.032	.022	.016	.014	.017	.030	.043	.047	.045	.056	.047	.033	.038	.026	.012	.037	.045	.045	.024	.032	.042	.047	.046	.008	.031
Lateral control with sideslip	Maximum α at which controls will balance C_l due to 20° yaw	20°	20°	21°	22°				30°	30°	30°	23°	25°	38°	30°	29°					30°	29°	34°	32°	40°	25°	27°	38°	40°	27°	
Maximum yawing moments due to controls (+) favorable (-) unfavorable	C_n α = 0°	-.007	.002 [a] -.003	.010 [a] -.008	.016	-.008	.001 [a] -.003	.009 [a] -.003	.014	-.007	.008 [a] -.005	-.006	.004 [b] -.003	.012 [a] -.002	.018	[a] -.006	.004 [a] -.005	-.001	.004	.008 [a] -.001	.011	-.004	.004 [a] -.001	.018 [a] -.001	.018	-.003	.007 [a] -.002	.014 [a] -.002	.021	.011	.007
	C_n α =10°	-.004	.004 [b] -.002	.013 [b] -.001	.018	-.008	.001 [b] -.003	.009 [b] -.003	.015	[a] -.006	.002 [a] -.004	-.008	.004 [b] -.003	.017 [b] -.002	.021	[a] -.008	.008 [a] -.005	.006	.009	.014	.018	.004	.011	.018	.024	-.003	.008	.019	.025	.019	.018
	C_n α =20°	-.010	[b] -.007	.008 [b] -.006	.015 [a] -.002	-.008	.002 [a] -.002	.010 [a] -.002	.016	-.006	.003 [a] -.003	-.010	.003 [b] -.004	.019 [b] -.003	.026	[e] -.012	.012 [c] -.001	.011	.015	.030	.022	.011	.021	[f] .024	.028	.006	.019	.030	.035	.025	.035
	C_n α =30°	-.006	-.006	[b] -.007	.002 [b] -.004	[a] -.008	[b] -.003	.001 [a] -.003	[f] .003 [a] -.001	-.013	[a] -.005	-.011	[a] -.006	.007 [a] -.005	.011 [a] -.001	-.013	[a] -.006	-.007	[b] -.003	[a] -.003	[a] .004 [a] -.001 -.003	-.010	[a] -.007	.006 [a] -.007	.015	-.010	[a] -.006	.007 [a] -.006	.013 [a] -.001	-.001	.021
Lateral stability (δ_A and δ_S =0°)	α for initial instability in rolling	19°	19°	19°	19°	22°	22°	22°	22°	22°	22°							22°	22°	22°	22°									22°	
	α for initial instability at p'b/2V =0.05 Yaw= 0° / Yaw= -20°	18° / 11°	18° / 11°	18° / 11°	18° / 11°	22° / 15°	22° / 15°	22° / 15°	22° / 15°	22° / 15°	22° / 15°							22° / 15°	22° / 15°	22° / 15°	22° / 15°									22° / 15°	
	Maximum unstable C_λ Yaw= 0° / Yaw= -20°	.048 / .093	.048 / .083	.048 / .093	.048 / .093	.036 / .075	.036 / .075	.036 / .075	.036 / .075	.036 / .075	.036 / .075							.036 / .075	.036 / .075	.036 / .075	.036 / .075									.036 / .075	

a to f - Where the maximum yawing moment occurred below maximum deflection, the letters indicate the deflection of the up aileron as follows: a = 10°, b = 15°, c = 20°, d = 25°, e = 30°, f = 40°.

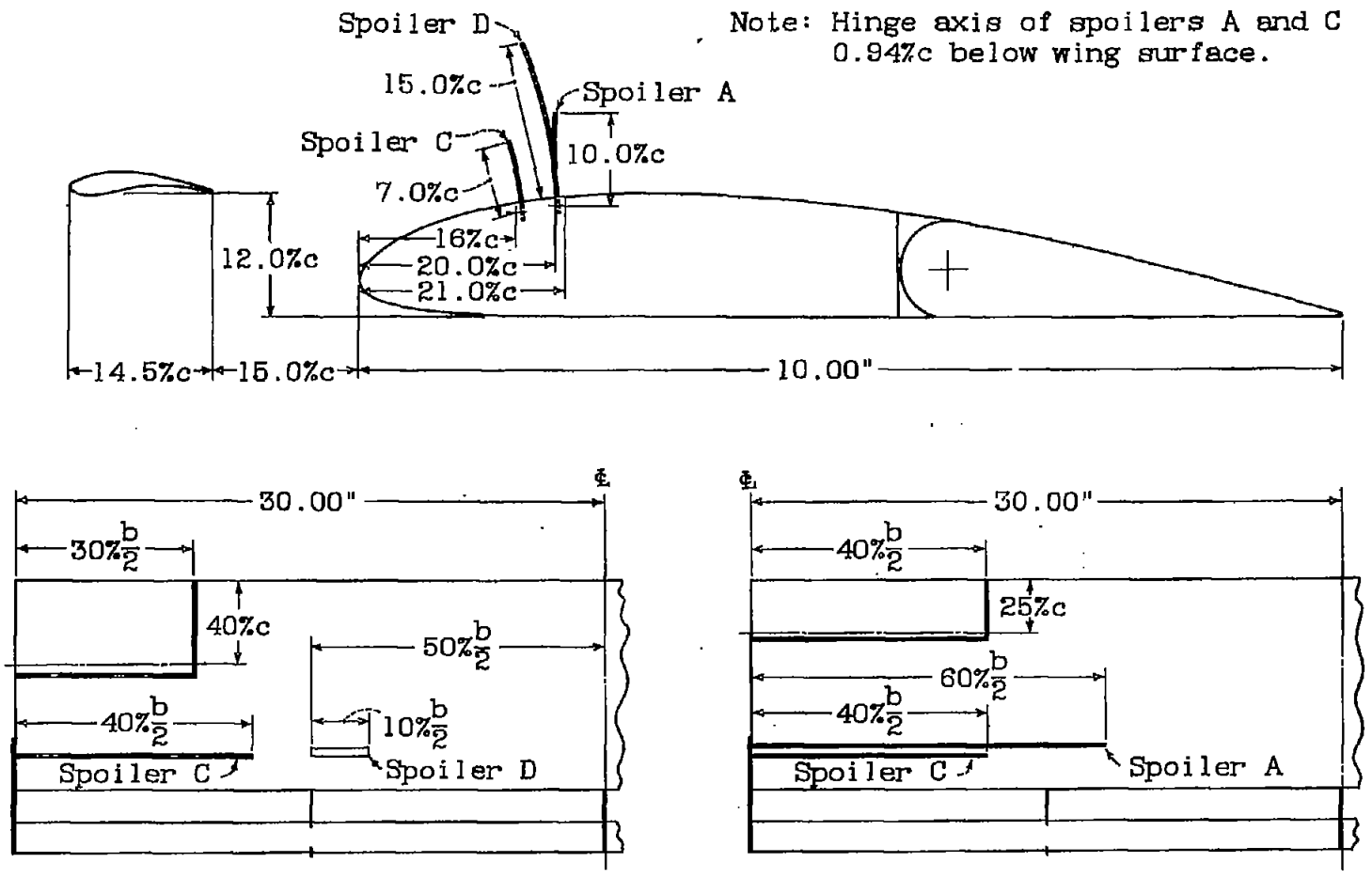

Figure 1.-Clark Y wing model with auxiliary airfoil, two sizes of ailerons and three types of spoilers.

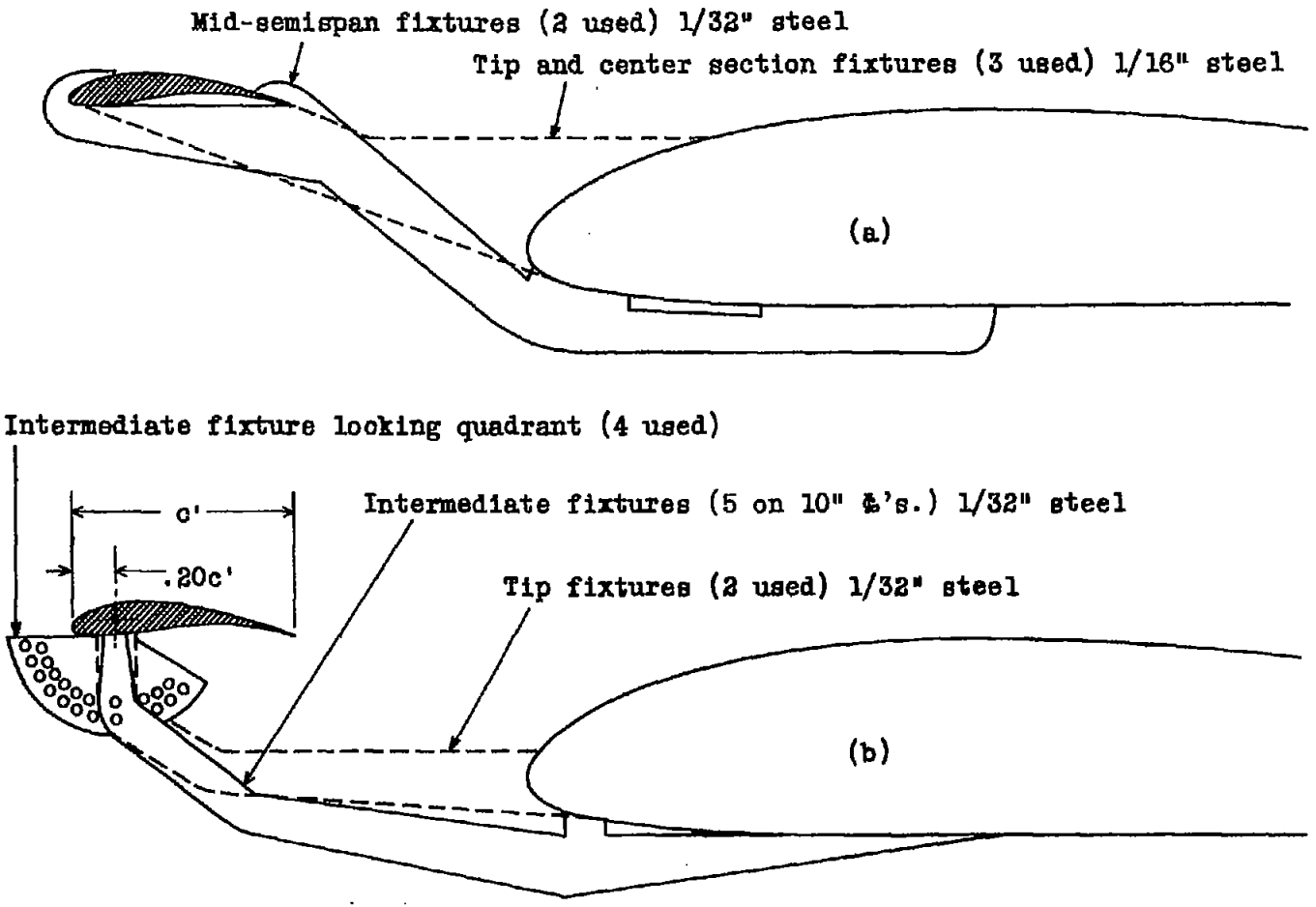

Figure 2. Auxiliary airfoil mounting fixtures. (a) fixed auxiliary. (b) movable auxiliary.

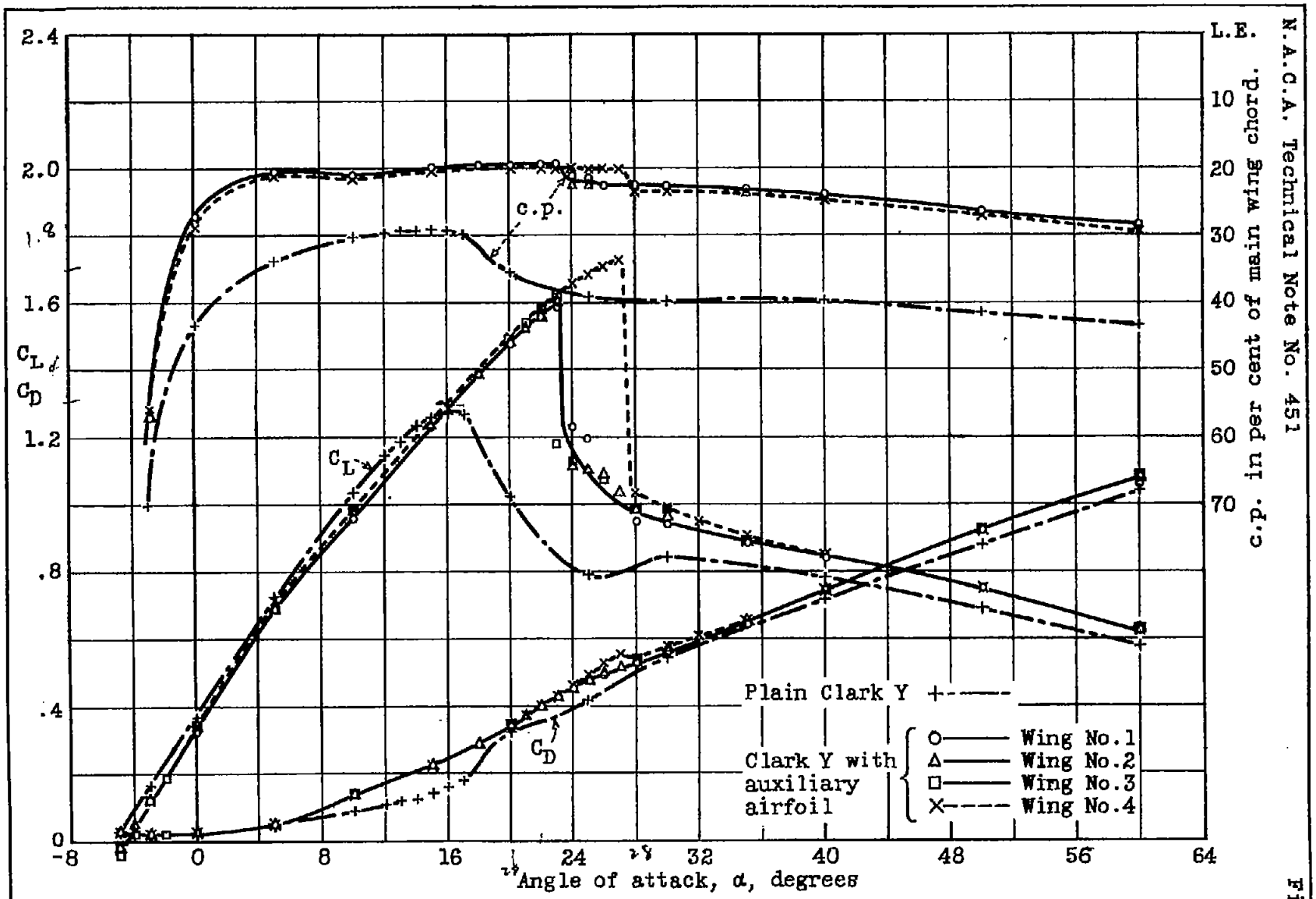

Figure 3.- Lift, drag, and center of pressure characteristics of different wing models with fixed auxiliary airfoils.