Library, L. M. A. L.

TECHNICAL NOTES

NATIONAL ADVISORY COMMITTEE FOR AERONAUTICS

No. 475

THE EFFECT OF SPLIT TRAILING-EDGE WING FLAPS ON THE AERODYNAMIC CHARACTERISTICS OF A PARASOL MONOPLANE

By Rudolf N. Wallace
Langley Memorial Aeronautical Laboratory

Washington
November 1933

3 1176 01433 1350

NATIONAL ADVISORY COMMITTEE FOR AERONAUTICS

TECHNICAL NOTE NO. 475

THE EFFECT OF SPLIT TRAILING-EDGE WING FLAPS ON THE AERODYNAMIC CHARACTERISTICS OF A PARASOL MONOPLANE

By Rudolf N. Wallace

SUMMARY

This paper presents the results of tests conducted in the N.A.C.A. full-scale wind tunnel on a Fairchild F-22 airplane equipped with a special wing having split trailing-edge flaps. The flaps extended over the outer 90 percent of the wing span, and were of the fixed-hinge type having a width equal to 20 percent of the wing chord.

The results show that with a flap setting of 59° the maximum lift of the wing was increased 42 percent, and that the flaps increased the range of available gliding angles from 2.7° to 7.0°. Deflection of the split flaps did not increase the stalling angle or seriously affect the longitudinal balance of the airplane. With flaps down the landing speed of the airplane is decreased, but the calculated climb and level-flight performance is inferior to that with the normal wing. Calculations indicate that the take-off distance required to clear an obstacle 100 feet high is not affected by flap settings from 0° to 20° but is greatly increased by larger flap angles.

INTRODUCTION

Considerable attention has recently been directed to the use of split trailing-edge wing flaps as a device for reducing the landing run and increasing the gliding angle of airplanes. As a part of its general research program dealing with high lift devices, the National Advisory Committee for Aeronautics has conducted comprehensive model tests in the 7 by 10 foot wind tunnel on split trailing-edge flaps (reference 1), and is now conducting full-scale investigations of this device on a Fairchild F-22 parasol monoplane.

This paper presents the results of tests conducted in the N.A.C.A. full-scale wind tunnel to determine the aerodynamic characteristics of the Fairchild F-22 airplane when equipped with a special wing having split trailing-edge flaps extending over 90 percent of the span. The flaps were hinged at their forward edge and had a width equal to 20 percent of the wing chord. Absolute coefficients of lift, drag, and pitching moment were determined for flap settings ranging from neutral, or closed, position to a maximum downward deflection of 59°, and from the angle of attack for zero lift to beyond the stall. All tests were conducted both with the horizontal tail surfaces in place and with them removed.

APPARATUS

Airplane.- The Fairchild F-22 is a small open 2-place parasol monoplane powered with an inverted Cirrus air-cooled engine. A 3-view drawing of the airplane is shown on figure 1, and the principal characteristics of the airplane as tested are given in table I.

Special wing.- The wing is of conventional wood and fabric construction with a span of 30 feet and a chord of 66 inches. The sheet-metal flaps have a width equal to 20 percent of the wing chord and extend over the outer 90 percent of the wing semispan. They are operated from the rear cockpit through a system of gears and bell cranks, and have a maximum down deflection of 59° from the closed position. Figure 2 shows a section of the special wing with the flaps and upper-surface ailerons; figure 3 is a photograph of the Fairchild F-22 with wing flaps in full-down position. The upper-surface ailerons were locked in zero position for all tests.

Wind tunnel.- The N.A.C.A. full-scale wind tunnel is described in detail in reference 2. Figure 4 shows the Fairchild F-22 airplane mounted on the balance in test position.

TESTS

Tests were conducted over an angle-of-attack range from zero lift to beyond the stall, with the flaps set at

0°, 20°, 40°, and 59° down from the neutral position. The airplane was tested both with the horizontal tail surfaces removed and with the elevator and stabilizer set at 0° to the thrust axis. For all tests the airplane was set at 0° in roll and yaw, the rudder was locked at 0° to the fin, and the propeller was locked in a vertical position.

The tests were made at a dynamic pressure of approximately 8 pounds per square foot, corresponding at standard sea-level conditions to a velocity of 56 miles per hour and to a Reynolds Number of 2,880,000, based on the wing chord.

For the computation of pitching moments, a center-of-gravity position was determined with a 140-pound man in the rear cockpit and 15 gallons of gasoline in the fuel tank.

RESULTS AND DISCUSSION

The results of these tests have been corrected for wind-tunnel effects and are presented in curve form on figures 5 to 9, inclusive. Figures 5 and 6 show comparative curves of C_L, C_D, and C_m plotted against angle of attack of the thrust axis for the four flap angles tested. The curves on figure 5 are for the condition with the horizontal tail surfaces set at 0° to the thrust axis, and those on figure 6 are for the condition with the horizontal tail surfaces removed. A comparison of the curves on figures 5 and 6 gives the lift, drag, and pitching moment produced by the horizontal tail surfaces. Figure 7 gives the values of C_{Lmax}, gliding angle, and gliding velocities as a function of flap setting. In the computation of these values, the lift, as measured with zero tail-plane setting, was corrected for the tail plane forces required to balance the airplane in flight.

The effect of flap deflection on the lift characteristics of the Fairchild F-22 airplane is shown on figure 5. As the flaps were depressed, the curves of C_L moved to the left on the scale of angle of attack but maintained practically a constant slope. Zero lift therefore occurred at progressively greater negative angles, and higher values of C_{Lmax} were reached at the same stalling angle. A maximum lift coefficient of 2.09 was obtained with a flap setting of 59°, which represents an increase of 42 percent over the maximum lift coefficient of 1.47 for the wing with

flaps closed. The curve of C_{Lmax} against flap angle, shown on figure 7, indicates that flap settings greater than 59° would give little further increase in maximum lift. This indication is in agreement with the results of the model tests reported in reference 1.

The effect of flap setting on the drag characteristics of the Fairchild F-22 airplane is shown by the drag curves on figure 5.

A comparison of the relative efficiency of the normal wing and the wing with flaps down can be made on the basis of the speed-range criterion C_{Lmax}/C_{Dmin}. It is evident that this function varies directly with the value of C_{Lmax}, inasmuch as the minimum drag of the normal wing is available at all times. The use of flaps therefore increased the value of C_{Lmax}/C_{Dmin} by 42 percent.

The effect of flaps on the climb and take-off of the airplane is shown on figures 8 and 9. Figure 8 presents curves of the power available and the power required at the four flap angles tested. The power available was calculated from the engine-propeller characteristics of a Cirrus engine, rated 95 horsepower at 2,100 r.p.m., and a normal fixed-pitch propeller. These performance curves show that the climb and level-flight performance of the airplane is greatly reduced by depressing the flaps. With the assumed horsepower available, the maximum rate of climb is decreased from 450 feet per minute with the flaps closed to 30 feet per minute with the flaps down 59°.

The effect of flap setting on the calculated take-off characteristics of the Fairchild F-22 airplane is shown on figure 9. The curve of take-off run required to reach a velocity 5 miles per hour above minimum speed indicates that the airplane would require the shortest ground run with the flaps depressed approximately 27°. With flap angles less than 27° the ground run would be increased because of the high velocities which must be reached before the airplane gains flying speed, and with flap angles greater than 27° the length of ground run is likewise increased because of high drag and consequent poor acceleration.

It is often necessary during a take-off to consider not only the length of ground run but also the distance required to clear an obstacle. On figure 9 is shown the total

horizontal distance required with different flap settings to clear an obstacle 100 feet high. This distance includes the ground run required to reach the speed for best angle of climb, the distance covered during the period of transition from ground run to flight attitude, and the horizontal distance required to climb 100 feet at the best angle of climb. The determining factor for the total distance required to clear an obstacle of such height is the angle of climb rather than the length of ground run. This distance remains approximately the same for flap deflections up to 20°, but increases rapidly at larger flap angles because of the reduced angle of climb.

One of the most important applications of the split trailing-edge wing flaps is their use as a device for increasing the available range of gliding angle and reducing the landing run. As aerodynamic design progresses and airplane lines are improved, with resultant increase in L/D ratios, it becomes increasingly important to have some form of air brake available for steepening the gliding angle in landing. If the braking device affords greater lift, as well as a reduction in the L/D ratio, its value is further enhanced because of the resultant reduction in velocity along the flight path. On figure 7 are shown curves of minimum gliding angle and gliding angle at maximum lift for the Fairchild F-22 airplane as a function of flap angle. With the flaps closed, the gliding-angle range is from 7.7° to 10.4°, whereas with the flaps full down the gliding angle at maximum lift reaches a value of 14.7°. It is therefore possible with the split trailing-edge wing flaps to obtain any gliding angle from 7.7° to 14.7°, a total range of 7.0°, as compared to a range of gliding angles available with the normal wing of 2.7°. The resultant horizontal and vertical velocities for a glide at maximum lift are also shown on figure 7. The horizontal velocity, or landing speed, is reduced from 51.0 miles per hour with the normal wing to 41.9 miles per hour with full-flap deflection. This reduction in landing speed is accompanied by a slight increase in vertical velocity.

In the consideration of any device that materially alters the lift and drag characteristics of an airplane, it is important to determine its effect upon longitudinal stability. For this purpose pitching moments have been computed for all flap angles tested, and are shown on figure 5 plotted against angle of attack. In general, depressing the flaps resulted in increased stability, the greatest

effect occurring at high angles of attack where the diving moment was materially increased. This increase in negative pitching moment would require greater tail-plane forces to trim the airplane, but from a consideration of the pitching moments produced by the present horizontal tail surfaces on the Fairchild F-22 airplane, there should be no serious difficulty in obtaining balance at all angles of attack and at all flap settings.

The effect of flap setting on the pitching moments of the wing is shown on figure 6, where pitching-moment coefficients for the Fairchild F-22 airplane are plotted against angle of attack as determined with the horizontal tail surfaces removed. For this condition the effect of tail-plane efficiency and variation in downwash with change in flap angle was eliminated, and the results more truly indicate the characteristics of the wing alone. The pitching-moment curves for the tail-off condition show that the flaps increased the negative value of C_m at high angles of attack, as was the case for the complete airplane. Practically all of the change in pitching moment occurred during the first 20° depression of the flaps.

CONCLUSIONS

1. Split trailing-edge wing flaps increased the value of $C_{L_{max}}$ for the Fairchild F-22 airplane from 1.47 to 2.09, or 42 percent.

2. The angle of maximum lift, or stalling angle, remained constant for all flap settings.

3. Negative pitching moments were increased with flap deflection at high angles of attack, but the change in moment was not great enough to prevent the attainment of longitudinal balance. The greatest change in pitching moments occurred in the range between 0 and 20° flap depression.

4. The gliding angle at maximum lift was increased from 10.4° to 14.7°, and the range between minimum gliding angle and the gliding angle at maximum lift was increased from 2.7° to 7.0°.

5. The computed landing speed of the airplane was reduced from 51.0 m.p.h. with the flaps closed to 41.9 m.p.h.

with the flaps fully deflected.

6. The calculated rate-of-climb and level-flight performance of the airplane with flaps depressed was markedly inferior to that with the flaps closed.

7. The calculated take-off distance required by the airplane to clear an obstacle 100 feet high was approximately the same for flap angles form 0° to 20°, but was greatly increased for larger flap angles.

Langley Memorial Aeronautical Laboratory,
National Advisory Committee for Aeronautics,
Langley Field, Va., August 15, 1933.

REFERENCES

1. Weick, Fred E., and Harris, Thomas A.: The Aerodynamic Characteristics of a Model Wing Having a Split Flap Deflected Downward and Moved to the Rear. T.N. No. 422, N.A.C.A., 1932.

2. DeFrance, Smith J.: The N.A.C.A. Full-Scale Wind Tunnel. T.R. No. 459, N.A.C.A., 1933.

TABLE I

Characteristics of the Fairchild F-22

Airplane with Special Wing

Weight (including 140 lb. in rear cockpit and 15 gal. gasoline)	1,467 lb.
Airfoil section	N-22
Wing area, including ailerons	162 sq.ft. $\frac{b}{c} = 9.96$
Stabilizer area	15.8 sq.ft.
Elevator area	10.4 sq.ft.
Fin area	4.1 sq.ft.
Rudder area	6.0 sq.ft.
Wing span	30 ft.
Wing chord	5 ft. 6 in.
Angle of wing setting	0.7°
Dihedral	3.0°
Stabilizer angle to thrust axis	0°
Elevator angle to thrust axis	0°
Distance back from leading edge to c.g.	1 ft. 6-1/8 in.
Distance below thrust axis to c.g.	5/8 in.
Distance from c.g. to elevator hinge	13.23 ft.

$AR = \frac{30^2}{162} = 5.55$

α	-5	0	5	10
C_D	.0700	.0750	.1000	.1400
C_L	.05	.40	.750	1.10
C_{D_i}	.0001	.0092	.0323	.0693
C_{D_p}	.0699	.0658	.0677	.0707

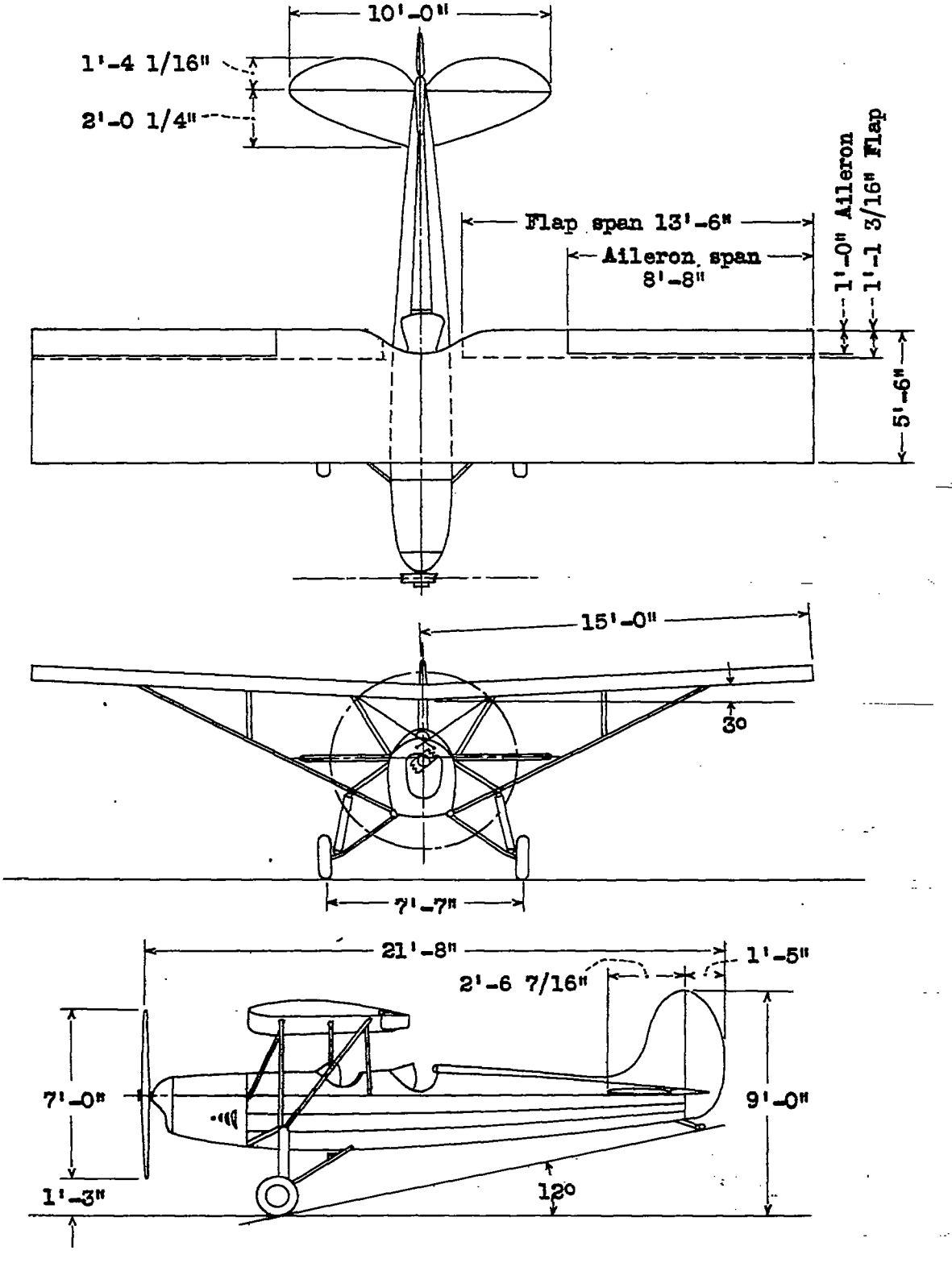

Figure 1.-Fairchild F-22 with special wing

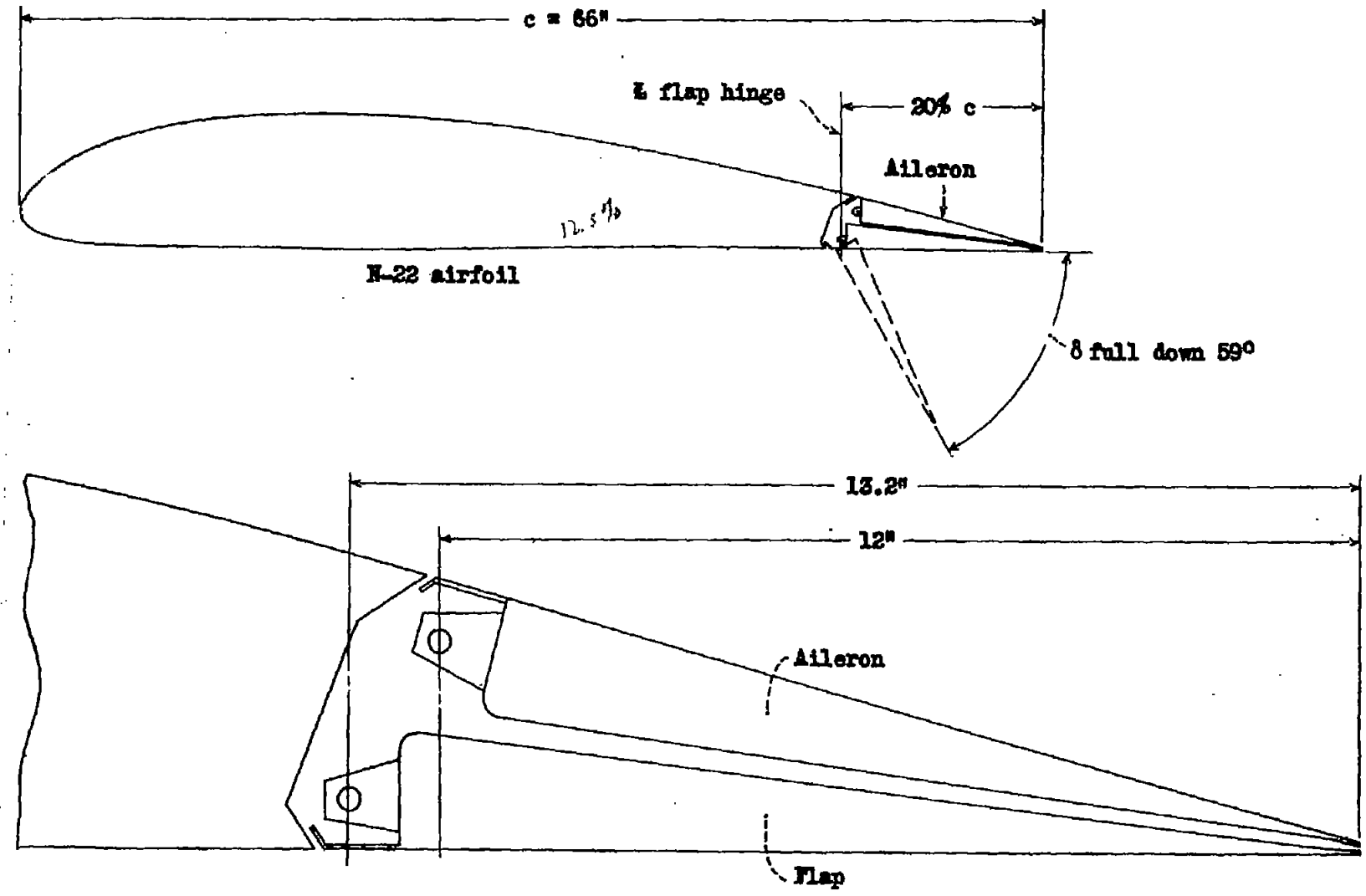

Figure 2.-Section of wing showing flap arrangement.

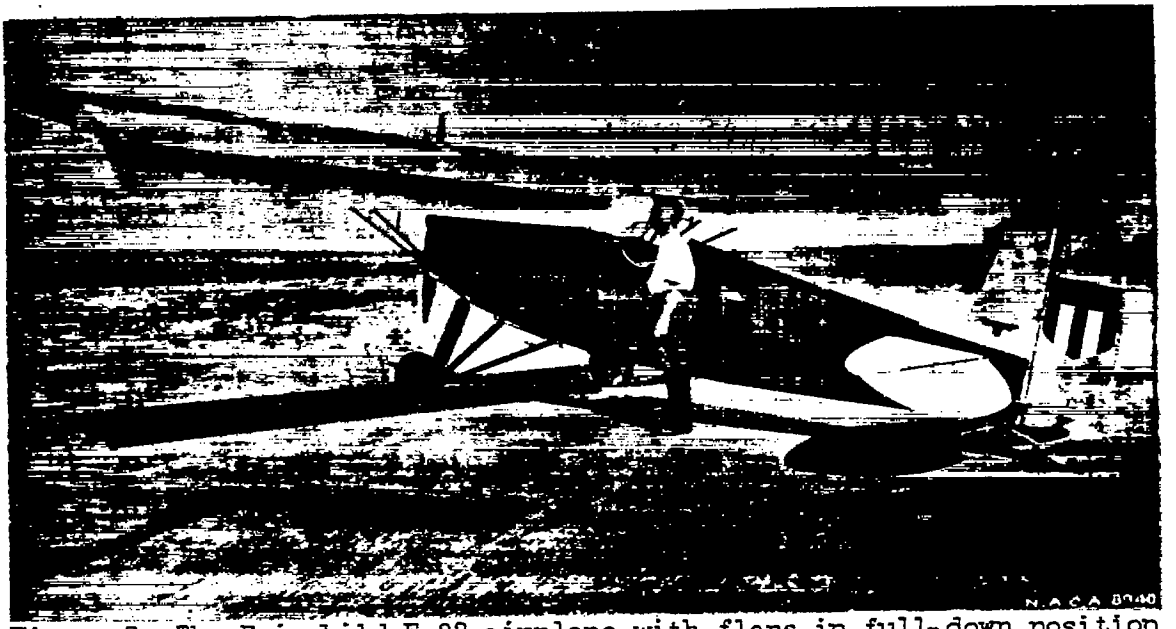

Figure 3.-The Fairchild F-22 airplane with flaps in full-down position

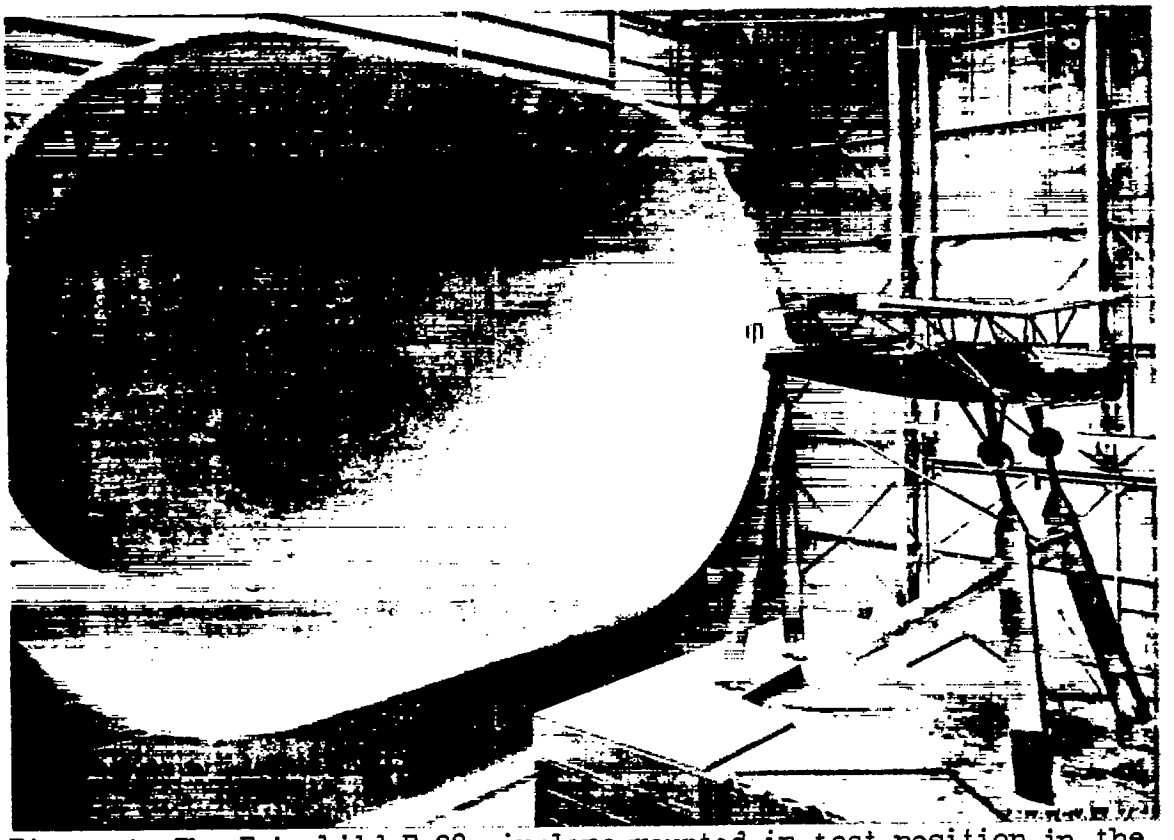

Figure 4.-The Fairchild F-22 airplane mounted in test position in the full-scale wind tunnel.

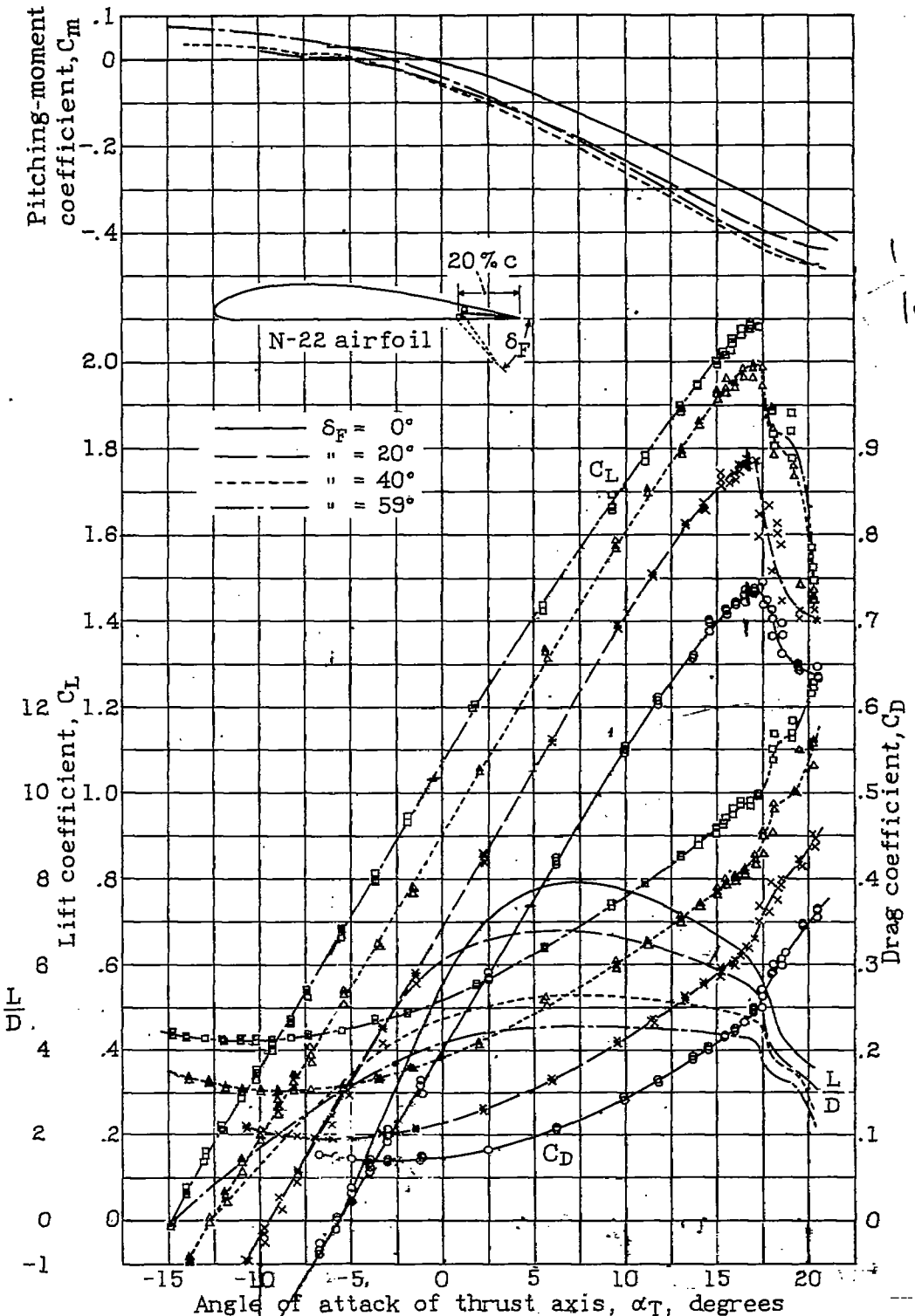

Figure 5.-Lift, drag, and pitching-moment curves for the Fairchild F-22 airplane with split trailing-edge wing flaps. Horizontal tail surfaces set 0° to the thrust axis. Corrected for wind-tunnel effects.

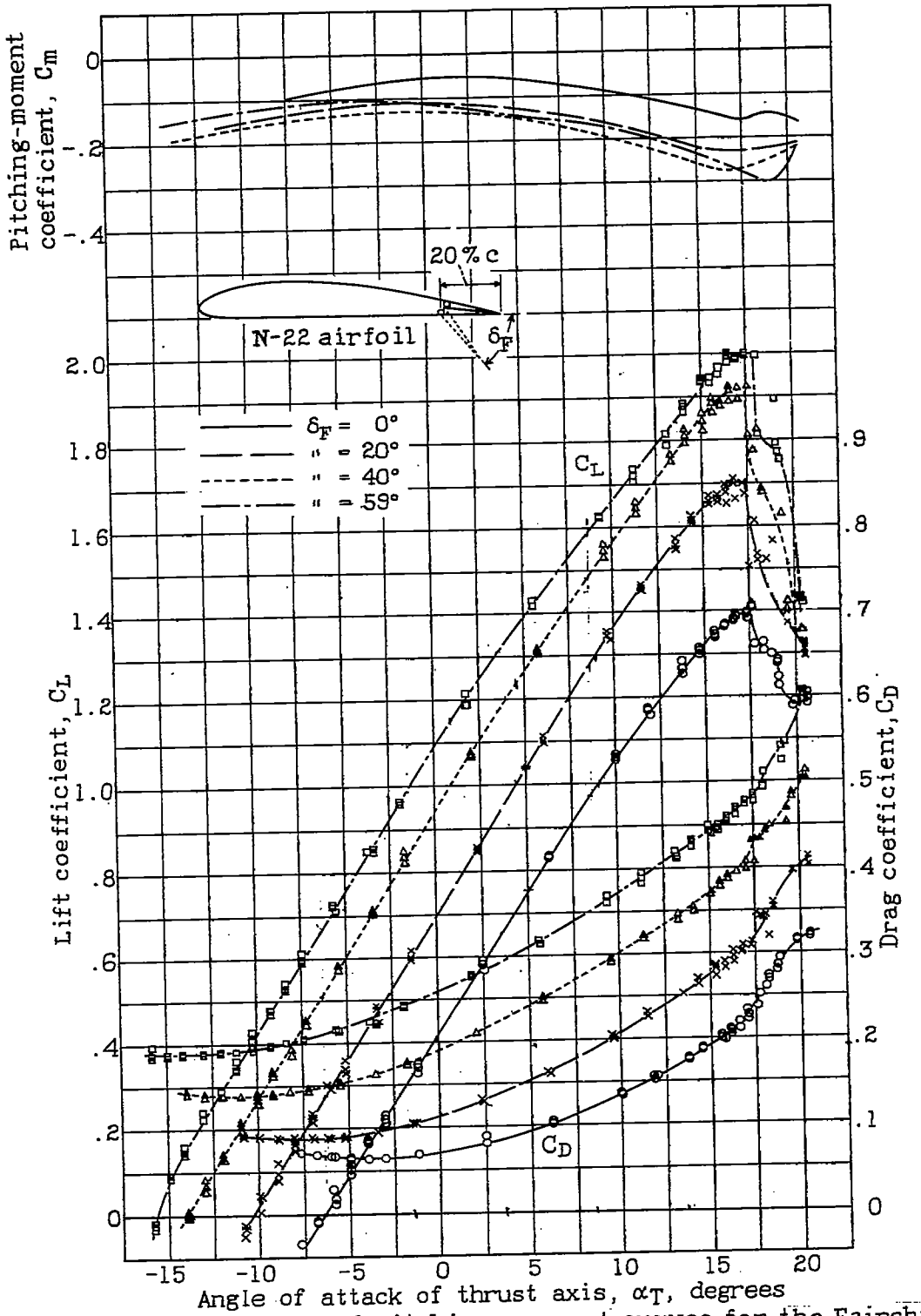

Figure 6.- Lift, drag, and pitching-moment curves for the Fairchild F-22 airplane with split trailing-edge wing flaps. Horizontal tail surfaces removed. Corrected for wind-tunnel effects.

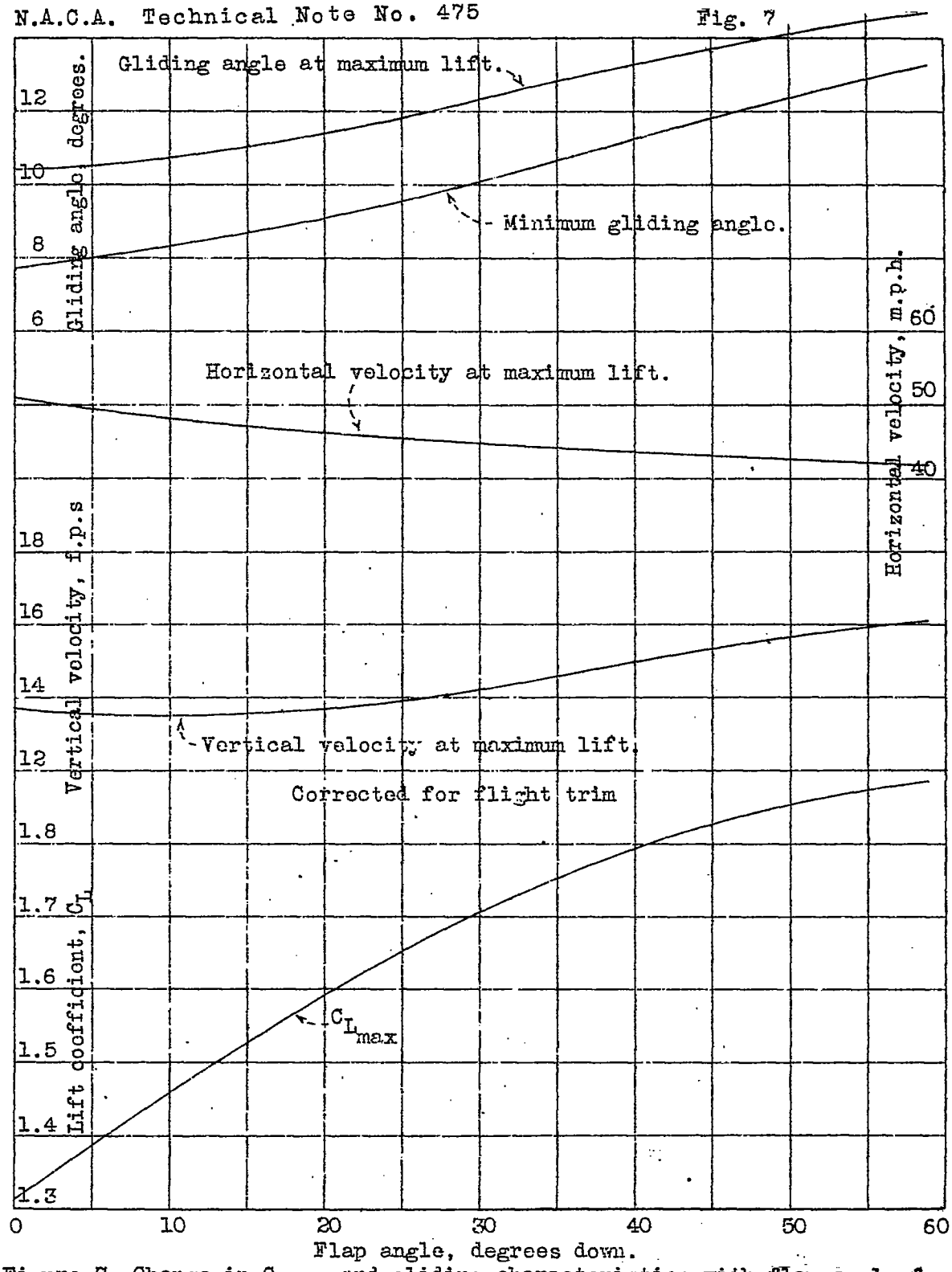

Figure 7.-Change in $C_{L_{max}}$ and gliding characteristics with flap angle for the Fairchild F-22 airplane.

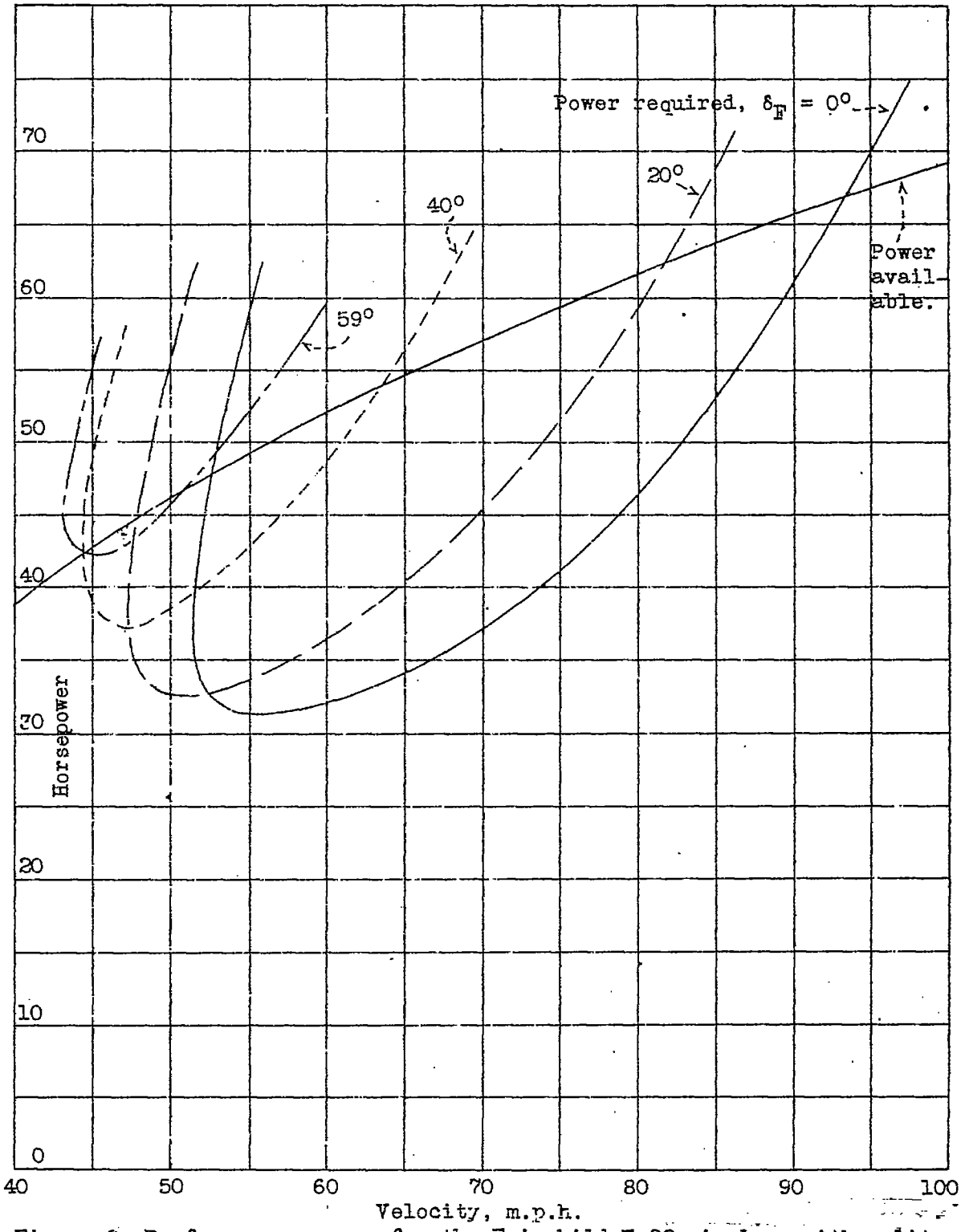

Figure 8.-Performance curves for the Fairchild F-22 airplane with split trailing-edge wing flaps.

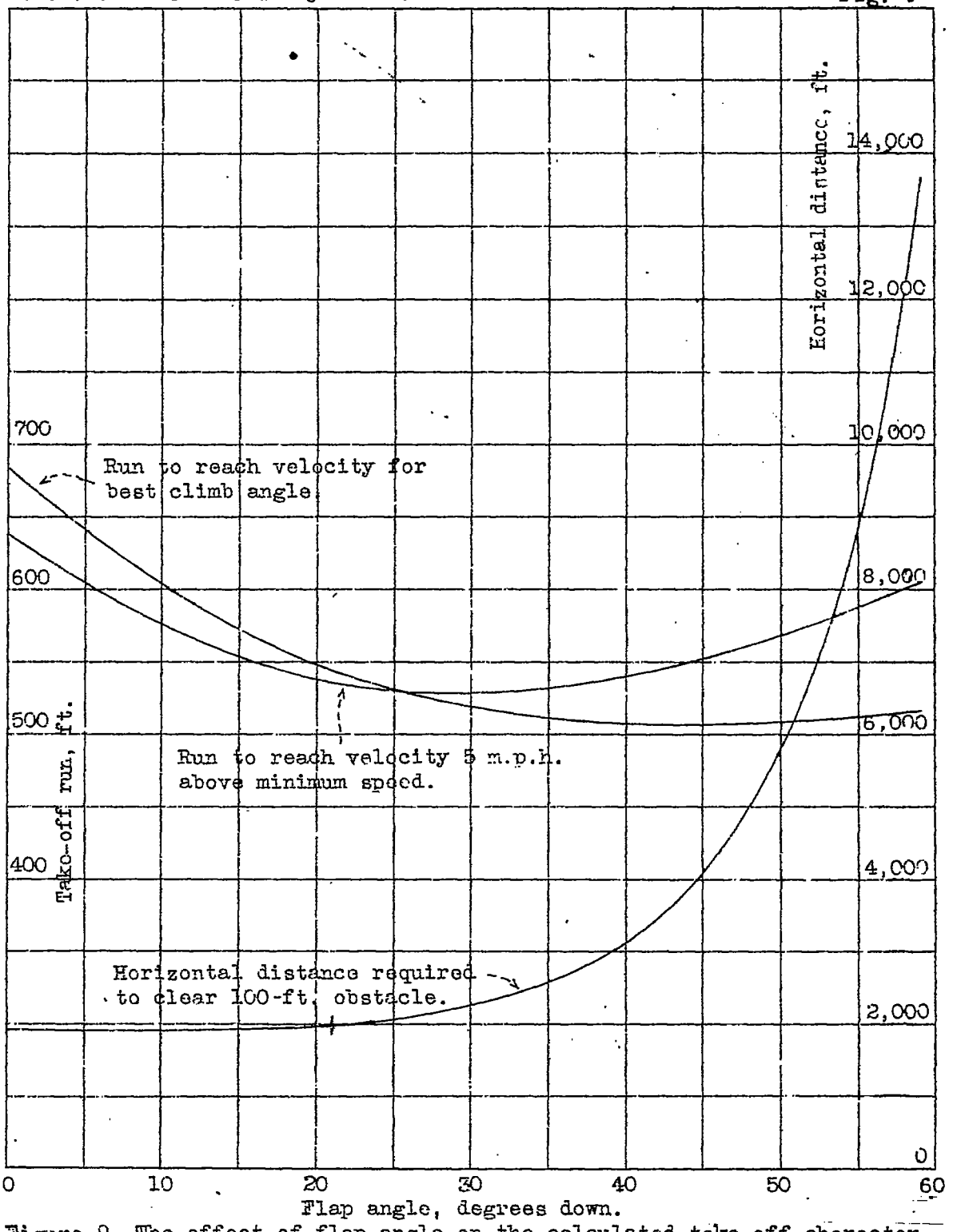

Figure 9.-The effect of flap angle on the calculated take-off characteristics of the Fairchild F-22 airplane with zero wind.