REPORT No. 462

TESTS OF NACELLE-PROPELLER COMBINATIONS IN VARIOUS POSITIONS WITH REFERENCE TO WINGS. III—CLARK Y WING—VARIOUS RADIAL-ENGINE COWLINGS—TRACTOR PROPELLER

By Donald H. Wood

SUMMARY

This report is the third of a series giving the results obtained in the 20-foot wind tunnel of the National Advisory Committee for Aeronautics on the interference drag and propulsive efficiency of nacelle-propeller-wing combinations. The first report gave the results of the tests of an N.A.C.A. cowled air-cooled engine nacelle with tractor propeller located in 21 positions with reference to a thick wing. The second report gave the results for several engine cowlings and nacelles with tractor propeller located in four positions with reference to the same wing. The present report gives results of tests of the same nacelles and cowlings in the same positions with reference to a smaller wing of Clark Y section.

The wing had a 38-inch chord and a 15-foot-10-inch span. The engine was a 4/9-scale model of a Wright J-5 radial air-cooled engine. Tests were made with a small nacelle with exposed engine cylinders, with a narrow variable-angle cowling ring, and with a hood taken from an N.A.C.A. cowled nacelle. Tests were also made with the N.A.C.A. cowled nacelle complete and with a smooth body forming the nacelle. The propeller was a 4-foot-diameter model of the Navy No. 4412 adjustable-pitch metal propeller.

The lift, drag, and propulsive efficiency were determined at several angles of attack for each cowling and in each nacelle location. The net efficiency was computed by the methods of N.A.C.A. Report 415, and the results are compared with those of that report and of N.A.C.A. Report 436.

The results of the tests with the Clark Y wing are in general agreement with those obtained using a thick wing. The N.A.C.A. cowled nacelle located directly ahead of the wing is the best tractor-nacelle arrangement. Analysis of the results shows that the net efficiency is but little affected by the airfoil section of the wing if the nacelles are located the same fraction of the chord from the leading edge. The gain in efficiency due to cowling the engine is so much greater than the gain due to proper nacelle location that it is advisable to cowl radial engines carefully before attempting to take advantage of the favorable effects of locating the nacelle ahead of the wing. The proper location of nacelles and careful cowling are important in the high-speed range of flight, but in the lower speed ranges there is little advantage of one nacelle position or cowling over another.

INTRODUCTION

This report is the third of a series giving the results of a general investigation of the mutual effects of wings, nacelles, and propellers. The program, originally presented at the Fourth Annual Aircraft Engineering Research Conference in May 1929, has been modified and extended from time to time, and now includes nacelles with tractor, pusher, and tandem propellers, and biplane as well as monoplane wings. Tests have been made with several propeller pitch settings and with numerous types of air-cooled engine cowlings. Later tests will give results on nacelles and cowlings for liquid-cooled engines.

The first report (reference 1) gave the results obtained with an N.A.C.A. cowled air-cooled engine nacelle and tractor propeller located in 21 positions with reference to a thick monoplane wing. The second report (reference 2) gave the results for several engine cowlings and nacelles with tractor propeller located in four positions with respect to the same wing.

The thick wing used in the early tests was designed to be comparable to the portion of the wing where the nacelles are located on unbraced monoplanes. In many installations thinner wings are used and it was considered advisable to determine in a general way the effect of using a smaller wing.

This third report therefore presents the results obtained with the same engine nacelles that were used on the thick wing and with several of the same variations in cowling. The nacelles were so located that the propeller was the same distances from the wing as in the tests of reference 2. The wing had a Clark Y section of considerably narrower chord than the thick wing. Additional results were also obtained with a smooth body located in the 4 positions previously mentioned, and in 3 other positions farther from the wing. These latter results are useful in indicating the effect of body shape on the nacelle-propeller performance.

As pointed out in the previous reports, the nacelle positions tested represent the best location, directly

ahead of the wing, and three other positions which have been quite commonly used in airplanes in the past. The number of positions was limited to some extent by the necessity of reducing the number of tests because of the time required. In any event, actual airplanes employ nacelle and wing arrangements which, because of practical considerations, will differ from those tested however detailed the program may be.

In all the reports of the investigation the same system of presenting the results is being used. Detailed information is included in the tables in the event that the reader may wish to reduce the results by other methods. This report completes the presentation of the information obtained on tractor propellors with radial engines and cowlings.

APPARATUS AND METHODS

The propeller-research tunnel, in which the tests were made, is described in reference 3. Standard apparatus and test methods were used, with certain exceptions mentioned later.

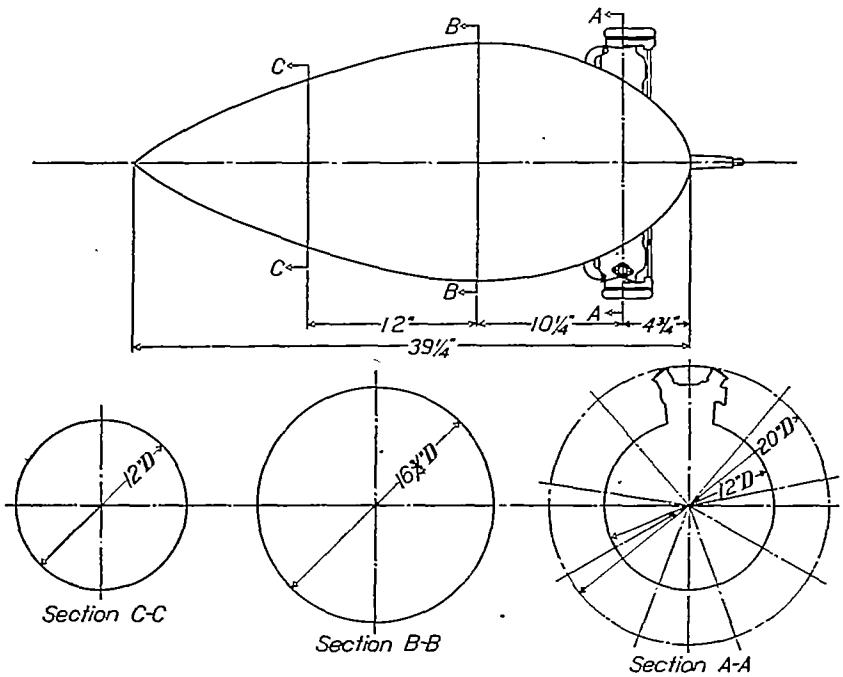

FIGURE 1.—Small nacelle and engine assembly.

The wing was constructed of wood with a 38-inch chord and a 15-foot 10-inch span (aspect ratio 5). This span was the largest that could be conveniently accommodated in the wind tunnel. The airfoil section was the Clark Y, which has a maximum thickness of 11.68 percent of the chord. The ordinates of this section are so well known that they are not repeated here. The central portion of the wing was provided with suitable metal ribs and plates for the connection of the struts required in attaching the nacelle to the wing.

The engine nacelles, constructed of sheet duralumin, were similar to nacelles required for a Wright J-5 radial engine, and were four-ninths (0.445) full scale. A detailed wooden model of this engine was installed in the proper position in the nacelles. One nacelle, constructed with the dimensions given in figure 1 and called "small nacelle", represents a normal nacelle such as is employed when the engine is uncowled. A larger nacelle fitted with a hood, the nacelle and hood constituting an N.A.C.A. cowled nacelle, was also used in some of the tests. The principal dimensions of this nacelle and the hood are given in figure 2. A third nacelle, called a "smooth body", was also used in some tests. The dimensions of this body are given in figure 3. It may be mentioned that the small nacelle and the N.A.C.A. cowled nacelle are identical with those used in the tests of references 1 and 2.

Tests were also made with the small nacelle fitted with the N.A.C.A. hood mentioned previously, and with a variable-angle ring. The ring was so constructed that the angle of its inner surface with reference to the thrust axis could be adjusted, and in these tests this angle was made −8°. This ring is identical with that used in tests of reference 2; its dimensions are given in figure 4. In all the tests with the variable-angle ring the leading edge was located 5¾ inches ahead of the center line of the engine cylinders.

The propeller, which is 4 feet in diameter, is geometrically similar to the Navy No. 4412, 9-foot-diameter aluminum alloy propeller. A number of full-scale tests of this propeller have been made and are described in reference 4. The blades may be turned in the hub to give different pitch settings. In the tests discussed here the pitch setting was 17° at 0.75 R, which is about average for usual operating conditions. This is the same pitch used in the tests of references 1 and 2, and the results of the propeller tests are therefore directly comparable.

For driving this propeller, a 25-horsepower 220-volt direct-current motor was mounted within the nacelle. Wires were led from the motor down the struts into the wing and along the supporting members to the control equipment on the floor below. The wires were carefully taped to the struts, and subsequent tests indicated a negligible effect on the tare drag. In a few of the first tests the wires were carried to the nacelle through a separate streamline strut. A Prony brake was used for calibrating the motor, and curves were obtained giving armature current against torque for several values of the field current. During the tests the field current was held at one of these calibrated values. Revolution speed was indicated by

a condenser-type electric tachometer connected by wires to an indicating instrument on the control board.

The wing-nacelle-propeller combinations with the various cowlings were tested with the nacelle and wing in the tests of reference 1. The nacelle positions are designated by the system of letters shown.

The wing and nacelle combinations were mounted on the balance by means of standard supports, which have been described in reference 5. With these supports the airfoil pivots about a line near the lower surface 25 percent of the chord back from the leading edge, and the angle of attack is adjusted by a crank operating a

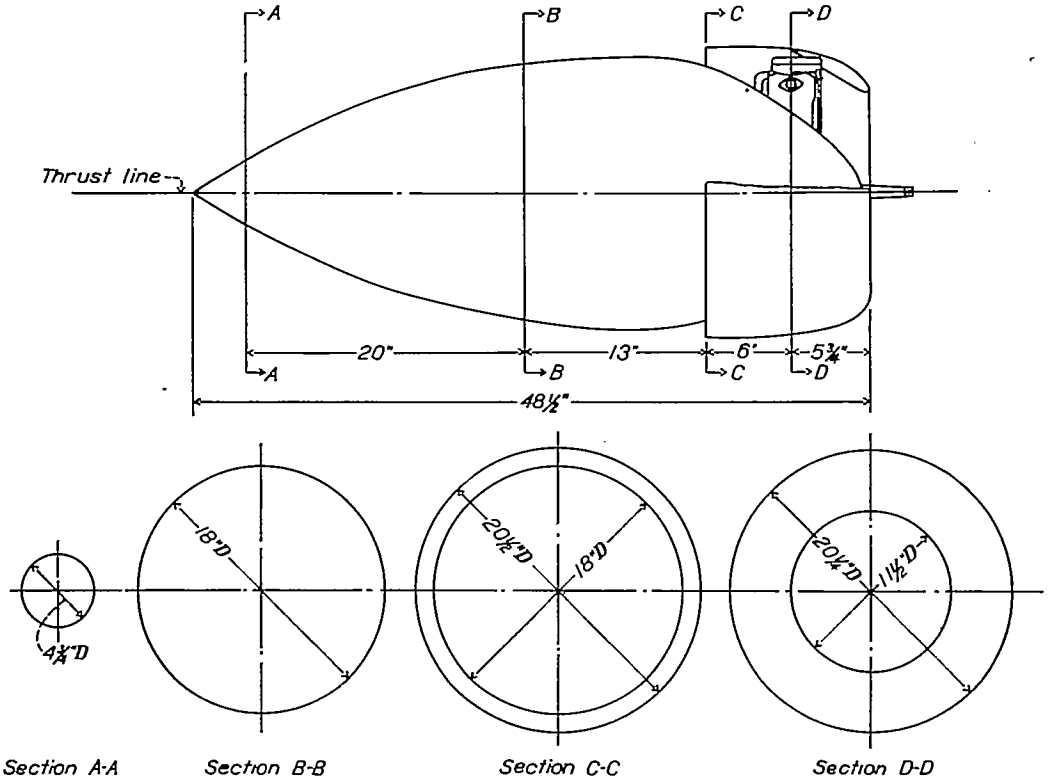

FIGURE 2.—N.A.C.A. cowled nacelle and engine assembly.

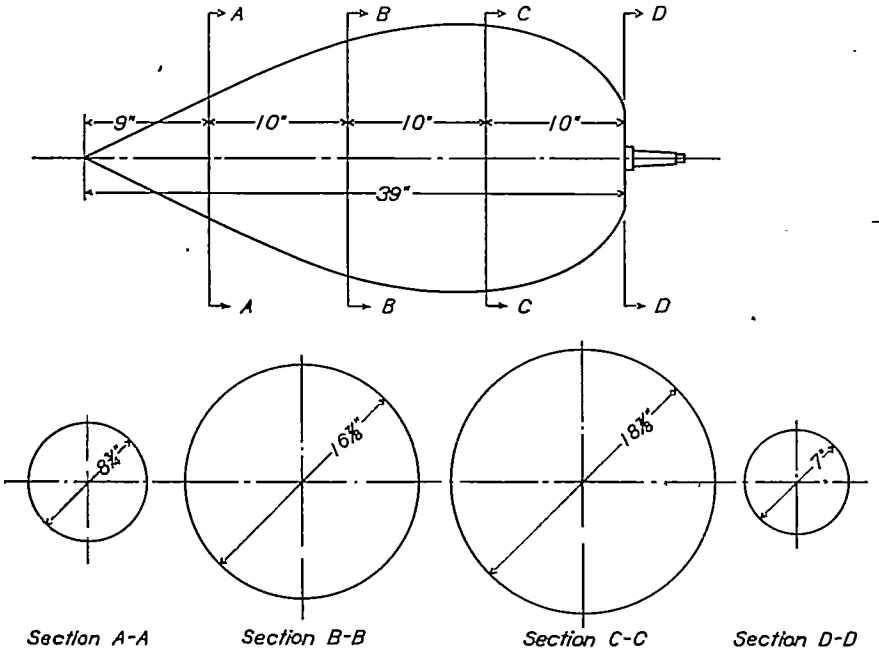

FIGURE 3.—Smooth body.

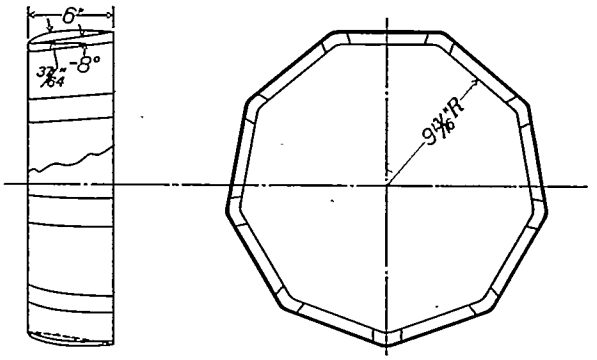

FIGURE 4.—Variable-angle ring.

in the relative positions marked in figure 5. In the figure the crosses and circles indicate the positions of the center line of the propeller hub in the present tests. The crosses alone indicate other nacelle locations used

post connected with a sting on the airfoil. The airfoil and nacelle mounted in one test position are shown in figure 6. Figures 7, 8, 9, 10, and 11 are photographs of the other wing-nacelle set-ups. In all cases the thrust line of the propeller was parallel to the wing chord. The lift and drag forces were measured simultaneously by balances on the floor below. The Reynolds Number varied from about 1,350,000 at the lowest air speed (50 miles per hour) to 2,750,000 at the highest speed (100 miles per hour).

For use in subsequent analyses, a series of tests at various air speeds was made with the wing alone at angles of attack of −5°, 0°, 5°, 10°, and 15°. Similar tests had been previously made with the nacelles alone (reference 6).

With each combination a run was made at several air speeds with the propeller removed. The lift, drag, and

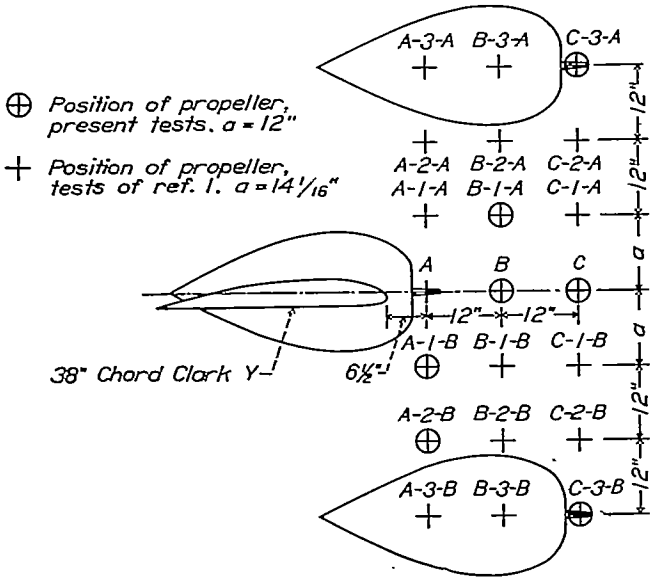

FIGURE 5.—Wing-nacelle test locations.

air speed were measured. A second test was then made with the propeller in place, and with the tunnel operating at several air speeds. In this test the lift, drag (or thrust), torque, propeller revolutions, and air speed were measured. Separate tests were made at angles of attack of −5°, 0°, 5°, and 10°.

Tare-drag measurements were made with the wing supported free of the supports. Other tests indicated that the propeller had a negligible effect on the tare drag.

Previous results (references 1 and 2) had shown that there was an advantage in fairing the nacelle into the wing when the two were close together and, accordingly, in these tests with the nacelle in positions B-1-A and A-1-B, the space between the nacelle and wing was filled with a fairing. Previous results had also shown a peculiar effect of the side brackets used for mounting the nacelles when the nacelle was located ahead of the wing. Tests were made on the small nacelle both with a fairing surrounding these side brackets and with the brackets removed. The fairings required over the brackets on the N.A.C.A. cowled nacelle were very small and no tests were made with them removed. The fairings and side brackets are shown in the photographs of figure 8 and in figures 13 and 14. When the nacelles were located in positions C-3-A, C-3-B, and A-2-B, they were supported on struts and no fairings were used.

RESULTS

The measured lift and drag were reduced to the usual coefficients

$$C_L = \frac{\text{lift}}{qS}$$

$$C_D = \frac{\text{drag}}{qS}$$

$$C_m = \frac{\text{moment}}{qSc}$$

where

q, the dynamic pressure ($\frac{1}{2}\rho V^2$).
ρ, mass density of the air.
V, velocity.
S, area of the wing.
c, chord of the wing.

(All moments are taken about the quarter-chord point of the wing.)

These coefficients were first plotted against the dynamic pressure q and then cross-plotted as C_L, C_D, and C_m against α (angle of attack) at values of the dynamic pressure corresponding to 50, 75, and 100 miles per hour.

The lift and drag coefficients have been plotted as polar diagrams arranged to facilitate comparison of the results with various cowlings in the different nacelle positions. Figure 12 shows the results for position B-1-A with various cowlings; figure 13 shows the results for position B with side bracket fairing in place; figure 14 shows the results for position B with side brackets removed; figure 15 shows the results for position A-1-B; and figure 16 shows the results for position A-2-B. Figure 17 shows the comparative results for the small nacelle without cowling in four nacelle positions, and figure 18 shows similar results with the N.A.C.A cowled nacelle. Figure 19 shows the comparative results obtained with the smooth body in various positions. In all these diagrams the polar of the wing alone is also given. All the polars are plotted from the data obtained at an air speed of 100 miles per hour. The results are also given in tables I and II, together with those for two other air speeds, 50 and 75 miles per hour. The values of the moment coefficients, which were found to be the same for all air speeds, are given in table III.

The results with propeller operating are reduced to the usual coefficients

$$C_T = \frac{T - \Delta D}{\rho n^2 D^4} \qquad C_P = \frac{P}{\rho n^3 D^5}$$

and η = propulsive efficiency

$$= \frac{\text{effective thrust} \times \text{velocity of advance}}{\text{motor power}}$$

$$= \frac{(T - \Delta D)\ V}{P}$$

$$= \frac{C_T}{C_P}\ \frac{V}{nD}$$

where T, thrust of propeller operating in front of body (tension in crank shaft).

ΔD, change in drag of body due to action of propeller.

$T - \Delta D$, effective thrust (discussed in reference 4) and C_L and C_m are computed as before but are now called C_{Lp} and C_{mp}.

The coefficients for all nacelle positions and cowlings at various values of V/nD and different angles of attack are given in tables IV to VIII, inclusive: Table IV, Thrust Coefficient (C_T); Table V, Power Coefficient (C_P); Table VI, Propulsive Efficiency (η); Table VII, Lift Coefficient with Propeller Operating (C_{Lp}) Table VIII, Moment Coefficient with Propeller Operating (C_{mp}). Since only individual values of the above coefficients are used in later comparisons, no curves are reproduced here. The reader is referred to reference 1 for a typical set of such curves.

ACCURACY

All readings were taken on scales and instruments that were calibrated frequently during the tests. The angles of attack of the airfoil were set within 5′ of the desired angles with an inclinometer. The motor calibration showed a scattering of points representing a maximum error of 1 percent. Tachometer readings were accurate within 10 revolutions per minute. The lift and drag were measured to the nearest pound.

In certain cases at high angles of attack the forces fluctuated rapidly and the above accuracy could not be obtained. These fluctuations occurred mainly near the burble point of the airfoil. The major portion of the faired results are believed to be correct within ±2 percent.

FIGURE 6.—Photograph of wing-nacelle combination in position B mounted for test.

DISCUSSION

In a general consideration of the problem of a nacelle and a propeller operating near a wing, several factors must be considered. The nacelle and wing have mu-

tual interferences which appear as changes in the lift and drag, the propeller characteristics are influenced by the presence of wing and nacelle, and the slipstream in turn changes the forces on the wing and nacelle. A detailed discussion of these questions is given in reference 1, and it is concluded there that a comparison of the relative merits of wing-nacelle-propeller combinations must include propulsive efficiency, interference-drag effects, and lift effects. A net efficiency is derived therein which includes the above factors in a rational and simple manner. The same methods are employed here. The method is perfectly general and the results can be compared directly with those previously given.

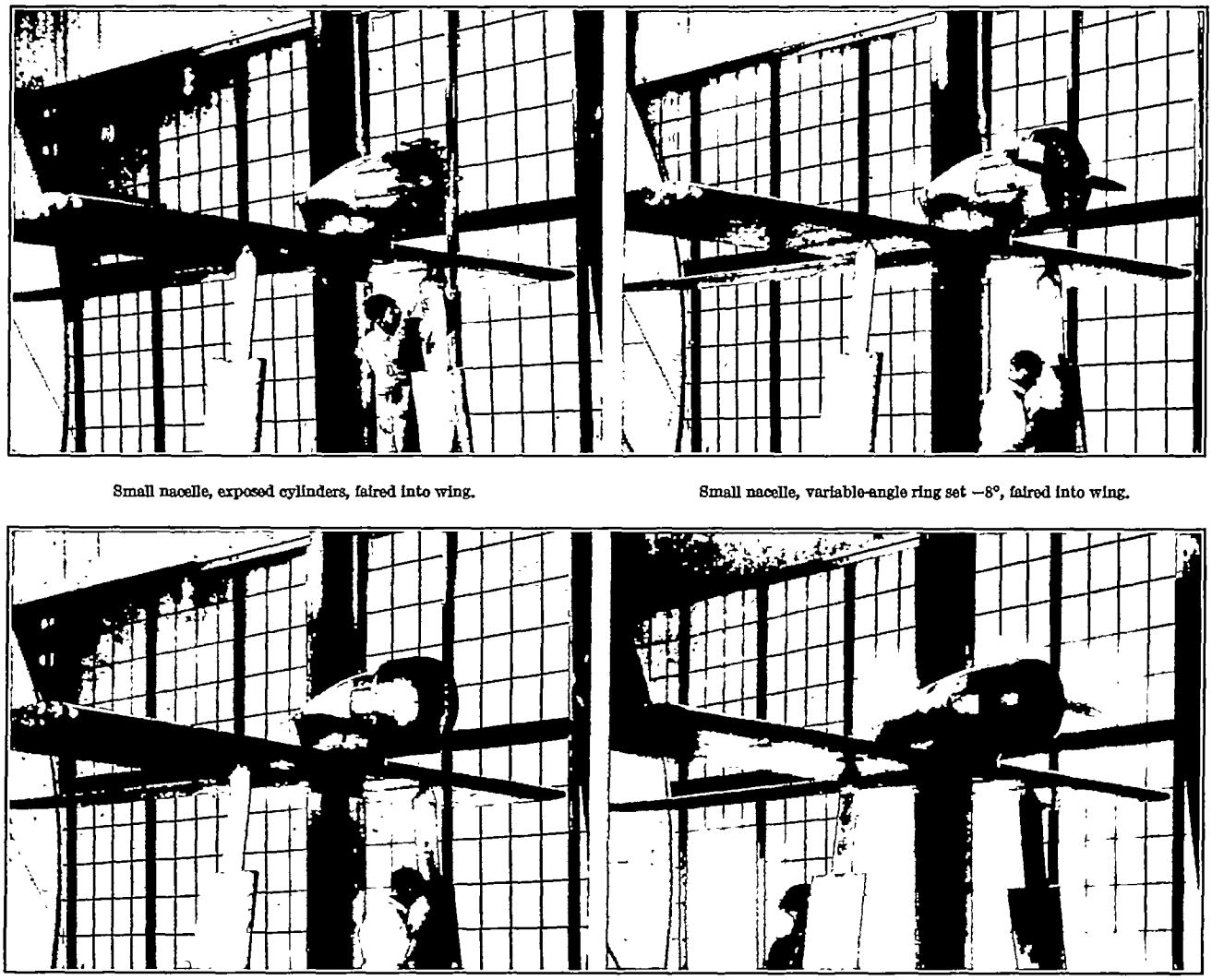

Small nacelle, exposed cylinders, faired into wing.

Small nacelle, variable-angle ring set −8°, faired into wing.

Small nacelle, N.A.C.A. hood, faired into wing.

N.A.C.A. cowled nacelle, faired into wing.

FIGURE 7.—Nacelles in position B-1-A.

INTERFERENCE LIFT AND DRAG

The largest item in the net efficiency is the propulsive efficiency, but all test results point to the fact that the propulsive efficiency varies with different arrangements in a fairly narrow range so that the predominating factor in the determination of the net efficiency is the nacelle drag and interference. A comparison of the relative drags of the various combinations is then a first approximation to their relative merits.

Accordingly, the drag results are first discussed and later the propeller effects are included. Besides simplifying the discussion, a somewhat clearer picture of the phenomena is perhaps thus obtained. In figures 12 to 19, inclusive, each line represents a different combination of nacelle, wing, and cowling. The abscissa intercept between the wing-alone polar and that for any wing-nacelle cowling combination represents the drag added by the nacelle; i.e., the nacelle drag plus wing-nacelle-interference drag. Similarly, the ordinate intercept represents the lift change due to the nacelle and cowling. These intercepts are of first importance because the arrangement that

develops the least increase of drag and the least loss of lift (that polar closest to the wing-alone polar) is the best, considering only the lift and drag.

In figure 12, which shows the results with nacelles and cowlings in position B-1-A, at a lift coefficient of 0.35 corresponding to about 0° for the wing alone, the drag added by the small nacelle with exposed engine cylinders is about 2½ times that added by the N.A.C.A. cowled nacelle; that added by the N.A.C.A. hood or the variable-angle ring and the small nacelle is about 1½ times that added by the N.A.C.A. cowled nacelle. These proportions hold approximately at the other lower angles of attack. The large loss of lift at high angles of attack from the nacelle installation in this position is to be noted, particularly in the case of the small nacelle with exposed engine cylinders. The advantage of cowling is amply evident.

In figure 13, showing the results for position B, similar conclusions may be drawn. In this position the nacelle is partly within the wing so that the drag added is very much less. Nevertheless, the nacelle with exposed engine cylinders adds about three times as much drag as the N.A.C.A. cowled nacelle, and the hood on the small nacelle adds about twice as much drag as the N.A.C.A. cowled nacelle. The smooth body is only slightly better than the N.A.C.A. cowled nacelle. The loss of lift is not as great as with the nacelles in the previous position except in the case of the small nacelle with exposed engine cylinders. These results were obtained with fairings surrounding the side brackets supporting the nacelle.

Small nacelle, exposed cylinders, with side bracket fairing.

Small nacelle, variable-angle ring set −8°.

Small nacelle, N.A.C.A. hood.

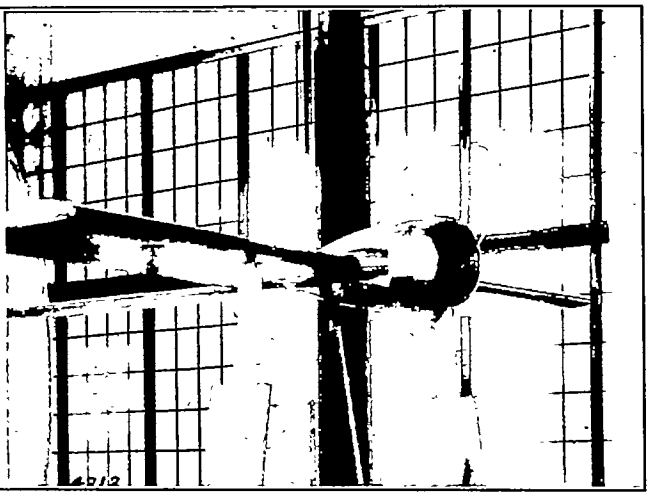

N.A.C.A. cowled nacelle.

FIGURE 8.—Nacelles in position B.

In figure 14 some of the results are shown for the case with these side brackets completely removed. It will be noted that the drag added is about 17 percent greater than when the brackets were in place. This result is in contrast to that of reference 2, in which the removal of the side brackets was shown to reduce the drag. In the case of the thick wing, the brackets were only a fraction of the wing thickness in depth; whereas in the present case they were practically as deep as

the wing and may have constituted a partial fairing of the nacelle into the wing. The nacelle with the exposed engine cylinders is still poor, particularly with reference to the lift at high angles of attack.

In figure 15, showing the results in position A-1-B, the small nacelle with the exposed engine cylinders adds about twice as much drag as the N.A.C.A. cowled nacelle. The peculiar result with the variable-angle ring in this instance is to be noted. The drag, except at the very low angles of attack, is considerably higher than that of the nacelle without cowling, and a very large loss of lift occurs at the higher angles of attack. This result points to some peculiar interference effect created by this particular cowling. At the high angles of attack the other cowlings seem to be of about equal merit.

In figure 16, showing the results for position A-2-B, the small nacelle with exposed engine cylinders adds about three times as much drag as the N.A.C.A. cowled nacelle; the small nacelle with either the N.A.C.A. hood or the variable-angle ring adds about twice as much. This result indicates that its interference drag must be slightly less than that of the N.A.C.A. cowled nacelle, because when tested alone its drag was slightly greater. (See reference 6.) The drag with the nacelle located directly ahead of the wing is considerably less than that in other locations, and the result therefore confirms previous tests indicating this location as the best.

Small nacelle, exposed cylinders, faired into wing.

Small nacelle, variable-angle ring set −8°, faired into wing.

Small nacelle, N.A.C.A. hood, faired into wing.

N.A.C.A. cowled nacelle, faired into wing.

FIGURE 9.—Nacelles in position A-1-B.

From the diagrams, it appears that at the higher angles of attack there is no great advantage of one cowling over another. An exception is the nacelle with exposed engine cylinders, which shows very detrimental lift effects at the high angles in all except the position far below the wing.

An easier comparison of the effect of position can be obtained from figures 17, 18, and 19. In figure 17, the results are shown for the small nacelle with exposed engine cylinders, and in figure 18 the results for the N.A.C.A. cowled nacelle in the four locations. The

location directly ahead of the wing is the best in both cases at the high-speed angles of attack, and in the case of the N.A.C.A. cowled nacelle it is only at the highest angles that it is inferior to locations below the wing. In figure 19, the results of the smooth-body tests in five positions are shown. The position directly ahead of the wing is superior to the others, but the variation is considerably less than with other types of cowling. This body is only a hypothetical shape and could not be used in practice without modification, but the results indicate that careful shaping of the body may result in material reduction in drag. Even though its drag is not particularly low, the fact that it was of smooth contour seems to have had an appreciable effect in reducing the interference drag.

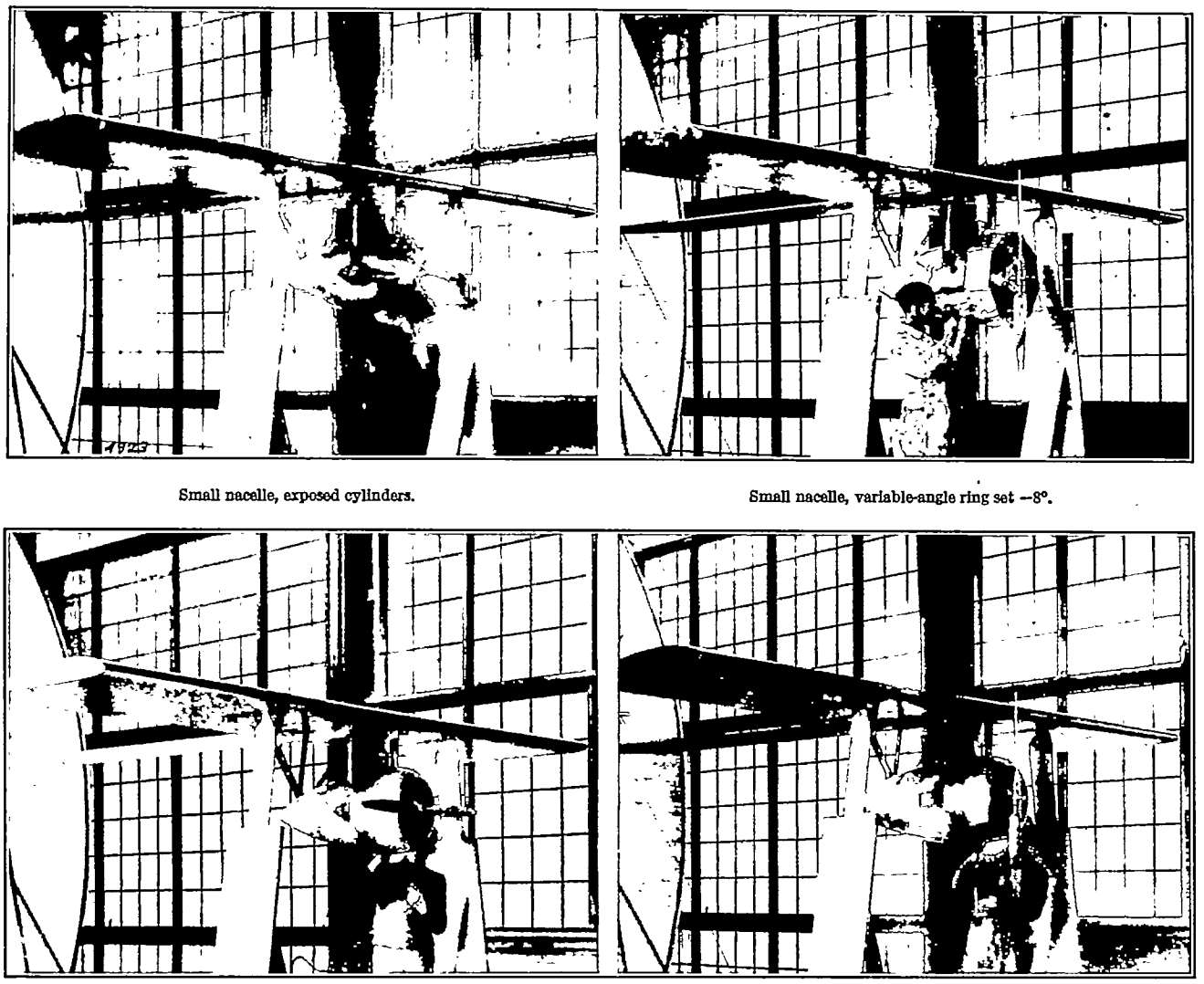

Small nacelle, exposed cylinders.

Small nacelle, variable-angle ring set −8°.

Small nacelle, N.A.C.A. hood.

N.A.C.A. cowled nacelle.

FIGURE 10.—Nacelles in position A-2-B.

NET EFFICIENCY

The preceding discussion and conclusions have been made without considering the propeller. The conclusions are similar to what would result from any model tests where only the nacelle and wing were present. One of the principal advantages of the present tests, however, is the opportunity for studying the effects of the operating propeller. The propeller supplies the thrust necessary to move the airplane through the air, and a proper determination of the thrust available under any given conditions for the different nacelle-propeller-wing combinations is a measure of the relative merits of the different arrangements. The variation in lift and drag without propeller has just been examined in detail. When the propeller is operating further changes occur, and in addition the propeller is affected by the presence of the nacelle and wing.

In the detailed discussion in reference 1, two factors are developed which are summed up to give the net efficiency, a measure of the real merit of any wing-nacelle-propeller combination. These factors are:

(1) The propulsive efficiency, representing the ratio of the effective thrust power to the motor power. Effective thrust power is defined as the propeller

thrust minus the increase of drag due to slipstream, so that the effects of the body on the propeller and the propeller on the body are accounted for.

(2) The nacelle drag efficiency factor, representing the fraction of the motor power which is used in overcoming the drag and interference of the nacelle.

The net efficiency, (1) minus (2), represents the fraction of the total motor power that is available for overcoming the drag of the other parts of the airplane exclusive of the nacelle. A high value of net efficiency indicates a high propulsive efficiency or low nacelle drag efficiency factor, or both. In any case, the higher the value the better the arrangement.

The details of the derivation of these factors are given in reference 1, and only the resulting formulas are repeated here.

$$\text{Propulsive efficiency} = \eta = \frac{(T-\Delta D)V}{P} = \frac{C_T}{C_P}\frac{V}{nD}$$

$$\text{Nacelle drag efficiency factor} = \frac{C_{D_G}-C_{D_W}}{C_P}\frac{S}{2D^2}\left(\frac{V}{nD}\right)^3$$

$$\text{Net efficiency} = \frac{C_T}{C_P}\frac{V}{nD} - \frac{C_{D_G}-C_{D_W}}{C_P}\frac{S}{2D^2}\left(\frac{V}{nD}\right)^3$$

where C_{D_W}, drag coefficient of the wing at a given angle of attack.

C_{D_G}, drag coefficient of the wing-nacelle combination *at the same lift coefficient with propeller operating as the wing alone*, and the other symbols as previously defined.

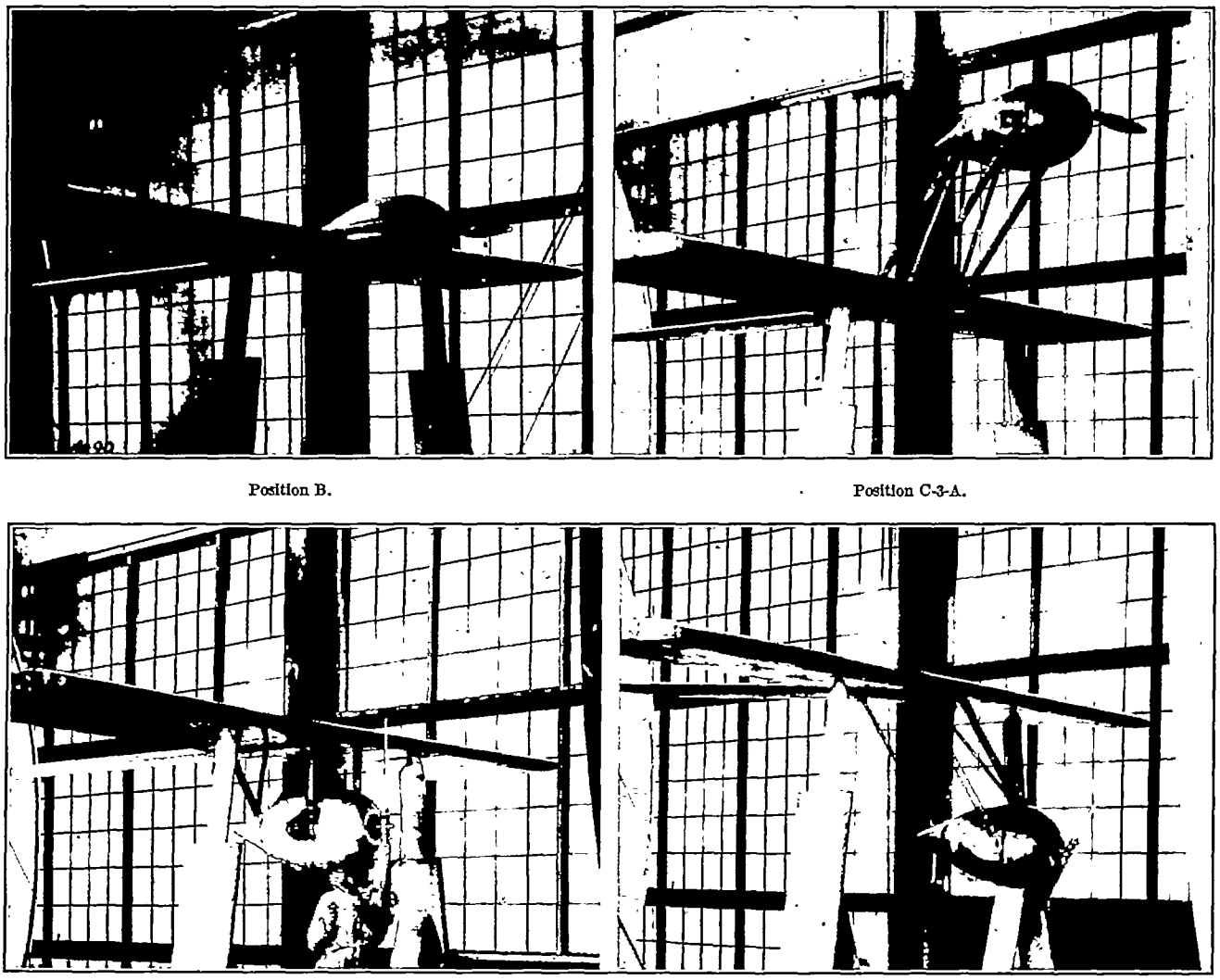

Position B. Position C-3-A.

Position A-2-B. Position C-3-B.

FIGURE 11.—Smooth body in several positions.

These formulas may be applied to any operating condition, and if the conditions are fixed for all nacelle-propeller-wing combinations a direct comparison may be made. Following the method of reference 1, the factors have been computed for an angle of attack of the wing alone of 0° ($C_L=0.347$) and a propeller $V/nD=0.65$, corresponding to an assumed high-speed operating condition, and also for an angle of attack of the wing alone of 5° ($C_L=0.635$) and $V/nD=0.42$, corresponding to climb. The high-speed V/nD is the average value at which the propeller operated at peak

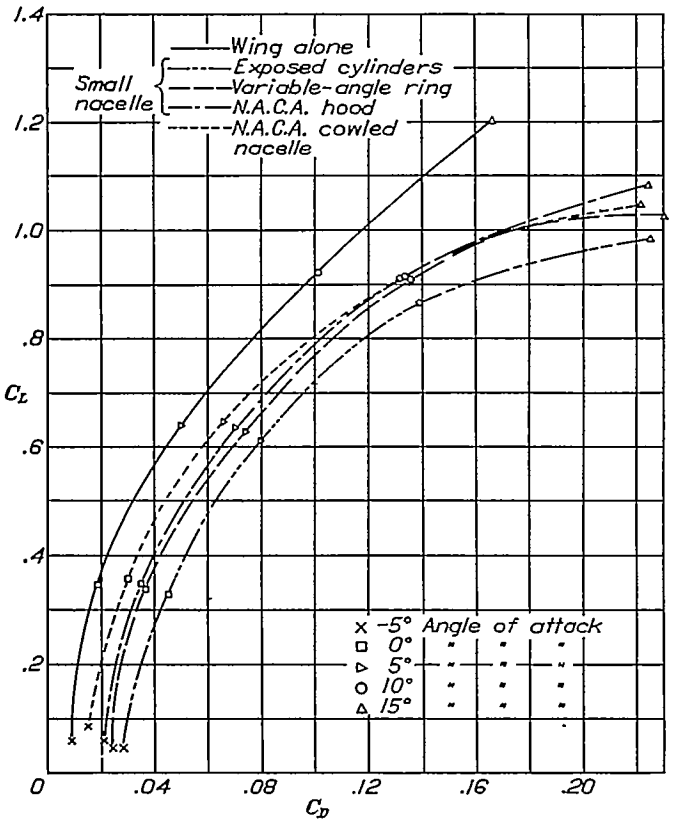

FIGURE 12.—Comparison of lift and drag characteristics of wing alone and nacelle combinations in position B-1-A faired into the wing.

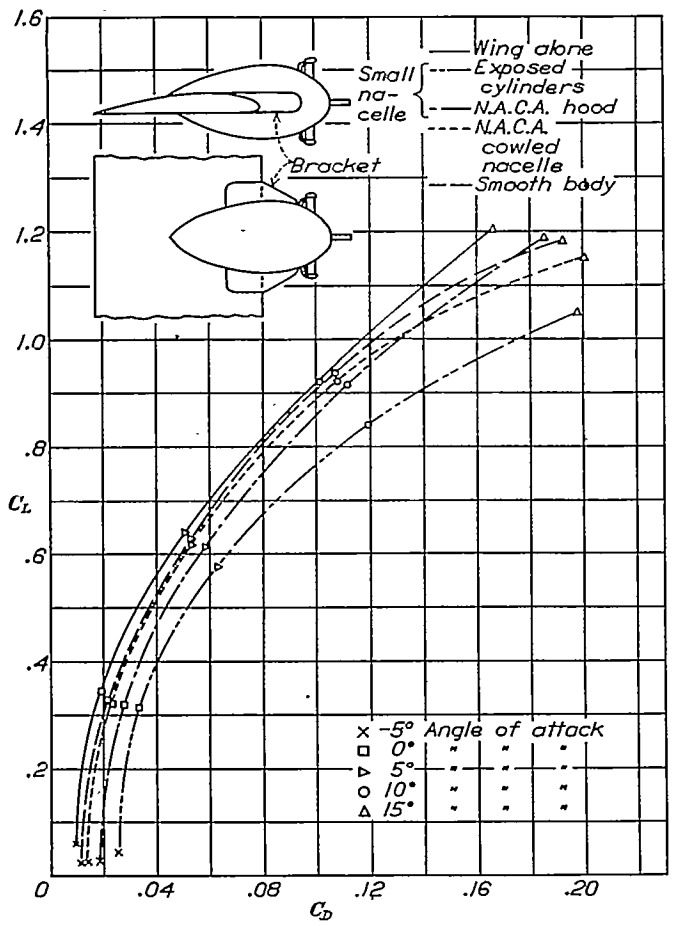

FIGURE 13.—Comparison of lift and drag characteristics of wing alone and nacelle combinations in position B with side bracket fairing.

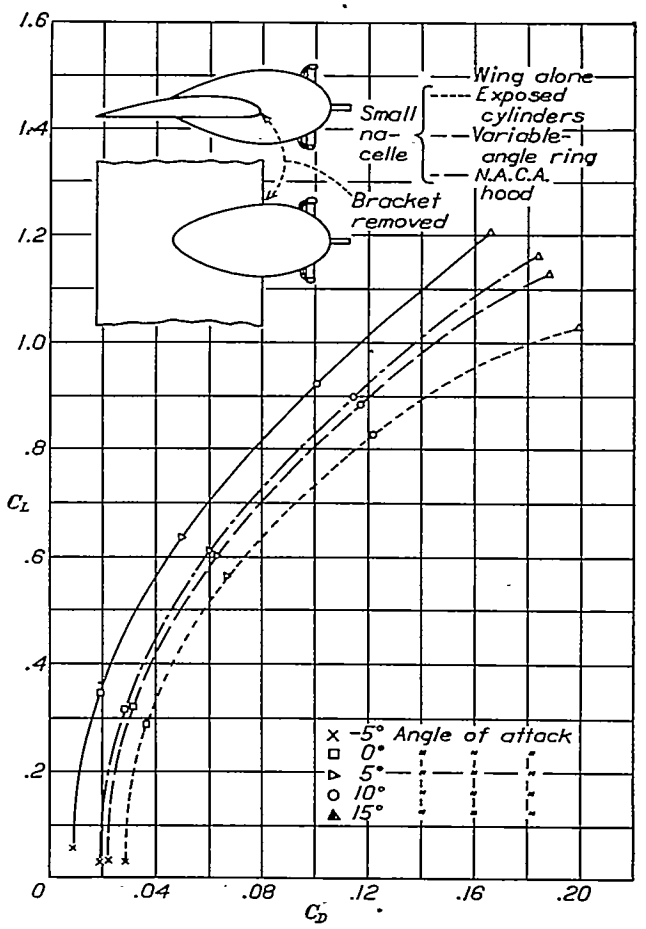

FIGURE 14.—Comparison of lift and drag characteristics of wing alone and nacelle combinations in position B without side brackets.

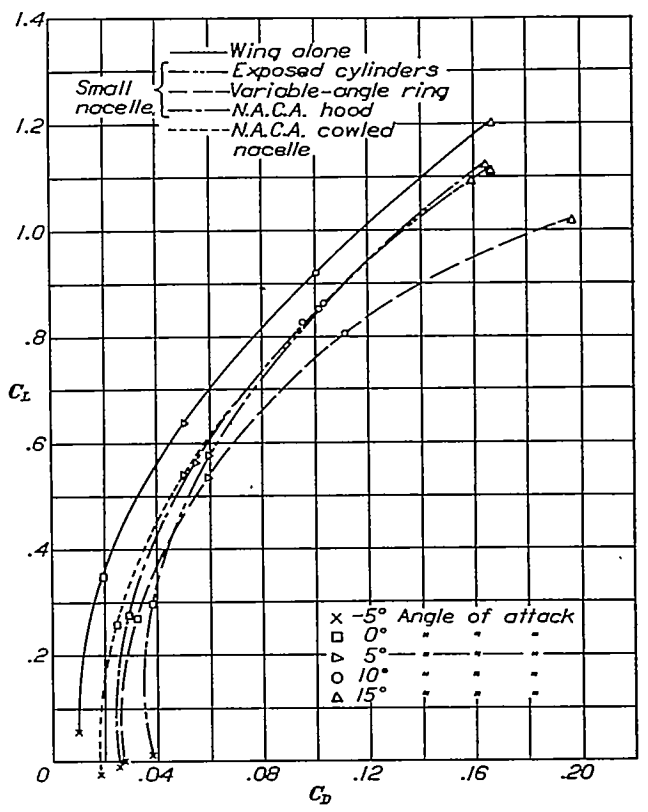

FIGURE 15.—Comparison of lift and drag characteristics of wing alone and nacelle combinations in position A-1-B faired into wing.

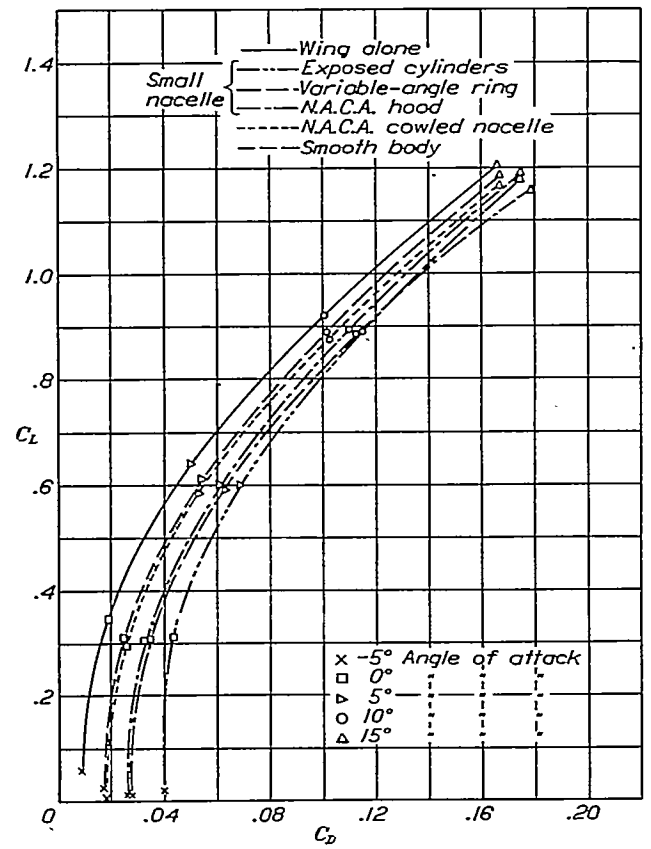

FIGURE 16.—Comparison of lift and drag characteristics of wing alone and nacelle combinations in position A-2-B.

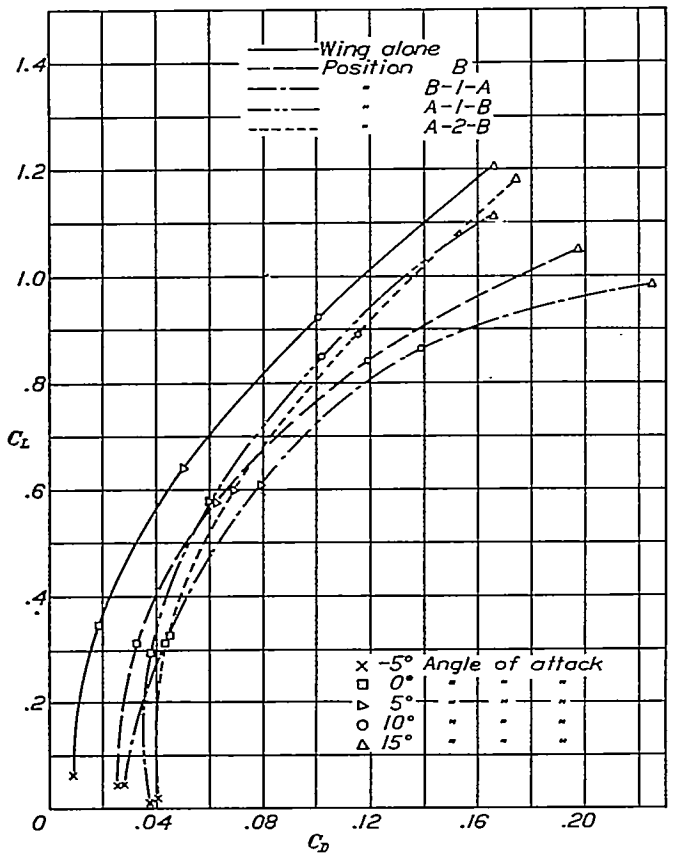

FIGURE 17.—Comparison of lift and drag characteristics of wing alone and exposed-cylinder nacelle combination in four positions.

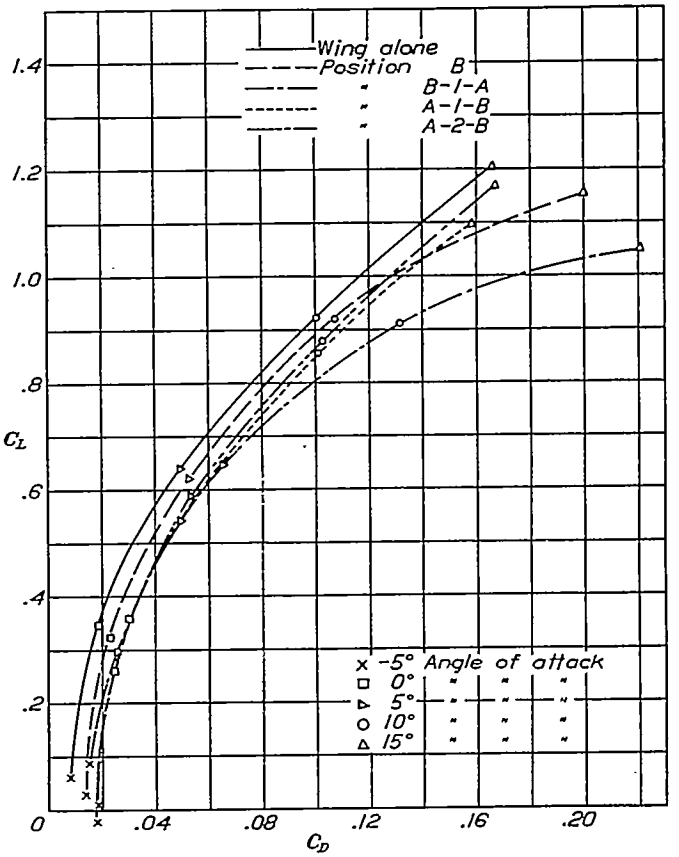

FIGURE 18.—Comparison of lift and drag characteristics of wing alone and N.A.C.A. cowled nacelle combination in four positions.

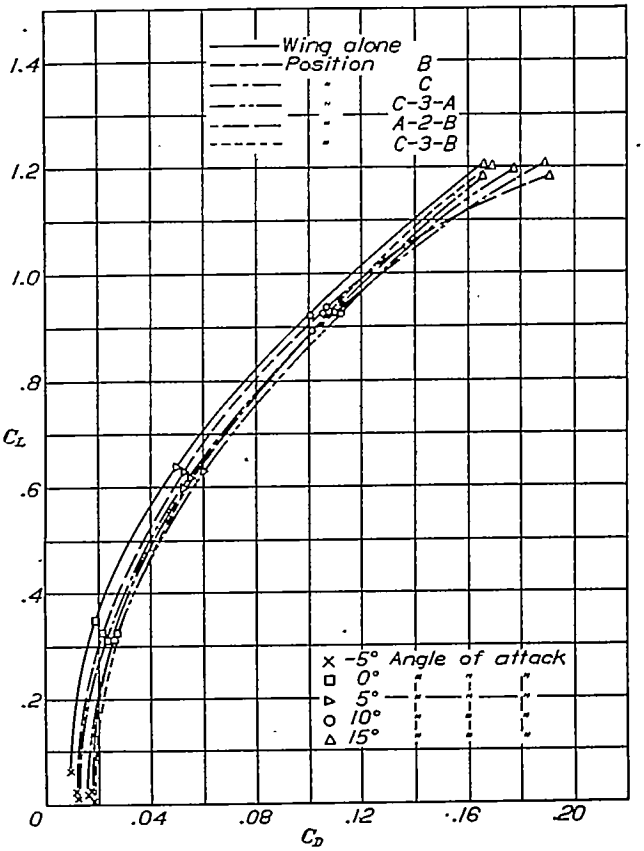

FIGURE 19.—Comparison of lift and drag characteristics of wing alone and smooth-body combination in five positions.

efficiency in the tests. The climb V/nD is the corresponding average value obtained by assuming a climbing speed equal to 60 percent of the high speed and the motor power reduced in proportion to the engine speed, that is, the engine developing constant torque, which is substantially true for airplane engines. The lift effect of the propeller is accounted for by adjusting the angle of attack to give the same lift as the wing alone, as noted in the definition of C_{D_C}, so that the comparisons are essentially for the same speed although the actual speed is undetermined.

The method may be illustrated by the following example. In figure 20 are plotted the lift and drag coefficients for the wing alone and the drag coefficient for the small nacelle with exposed cylinders on the wing in position B-1-A. The plotted values are taken from tables I and II. The lift coefficients with propeller operating at $V/nD=0.65$ and at $V/nD=0.42$ are obtained by interpolating between values in table VII and plotted for several angles of attack.

For the high-speed condition ($C_L=0.347$, $V/nD=0.65$) the lift with propeller operating is only slightly greater than that of the wing alone for this particular combination. Projecting down from the lift-coefficient curves at $C_L=0.347$ to the drag-coefficient curves, the drag coefficient added by the nacelle, taking into account the lift due to the propeller, is obtained as indicated on the figure.

The nacelle drag efficiency factor is

$$\text{N.D.F.}=\frac{C_{D_C}-C_{D_W}}{C_P}\,\frac{S}{2D^2}\left(\frac{V}{nD}\right)^3$$

Reading C_P from table V and substituting the above values, there results

$$\text{N.D.F.}=\frac{0.0250}{0.0337}\times\frac{50}{2\times4^2}\times(0.65)^3=0.318$$

Reading η from table VI

Net efficiency $=\eta-$N.D.F.

$=0.853-0.318=0.535$

as given in table IX.

For the climbing condition ($C_L=0.635$, $V/nD=0.42$) the lift coefficient with propeller operating is considerably greater than that of the wing alone. The drag coefficient chargeable to the nacelle is reduced accordingly because the same lift can be obtained at a lower angle of attack.

The nacelle drag efficiency factor becomes, substituting C_P from table V,

$$\text{N.D.F.}=\frac{0.0127}{0.0421}\times\frac{50}{2\times4^2}\,(0.42)^3=0.035$$

The net efficiency $=\eta-$N.D.F.

$=0.675-0.035=0.640$

as given in table X.

The factors thus derived for the nacelles and cowlings in the different positions are given in tables IX and X. The values given here are based on different lift coefficients than the corresponding values in references 1 and 2. It is evident that the factors assume different values depending on what operating conditions are assumed and although there may be some question as to the possibilities of comparing the results directly it is felt that no material discrepancies result from such a comparison. In order to be strictly correct, all comparisons should be made at a constant value of the lift which, in general, means different values of the lift coefficient because of variations in airfoil section and area.

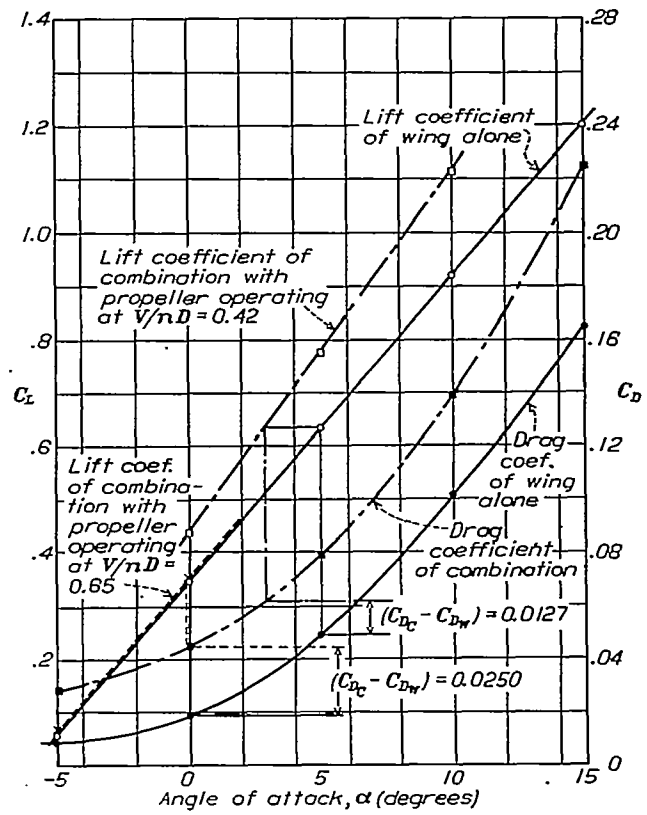

FIGURE 20.—Method of obtaining nacelle drag used in computing nacelle drag efficiency factor.

(Small nacelle with exposed engine cyclinders in position B-1-A.)

An examination of table IX indicates that the propulsive efficiency is highest in the high-speed condition with the nacelle with exposed engine cylinders. The N.A.C.A. cowled nacelle and the smooth body give the lowest propulsive efficiencies. These results are in agreement with those of other tests on propellers with smooth and with poorly stream-lined bodies.

The high propulsive efficiency with the uncowled engine nacelle does not mean high net efficiency, however. The nacelle-drag factor is very high and the net efficiency is correspondingly reduced. In almost every case, the order of the net efficiencies is in the inverse order of the drags of the various com-

binations, so that the N.A.C.A. cowled nacelle and wing combination has the highest net efficiency. There does not seem to be much choice between the various intermediate cowlings, although they are all bettter than the uncowled nacelle arrangement.

In the climb condition (table X) the differences are, as expected, less marked. The propeller adds appreciably to the lift, however, owing to the considerable vertical component of thrust and increase of velocity over the wing. This results in the nacelle drag efficiency factor becoming negative in most instances, indicating that the angle of attack is reduced sufficiently below the angle selected for the climbing condition to make the net drag less than that of the wing alone. Because the nacelle drag is a much smaller proportion of the total drag at the high angles of attack, the differences in net efficiencies are less marked although the cowled nacelle still is the best. The differences, in general, are so slight that the performance of any arrangement in the climbing range would not be greatly affected by the choice of nacelle location or cowling.

The conclusion in the preceding section on the difference in drag in favor of the nacelle with side bracket fairing does not seem to hold true when the propeller effects are considered. There is enough gain in propulsive efficiency by removing the side brackets to overcome the greater drag and the conclusion of reference 2 that side brackets are detrimental remains true. An exception will be noted in the case of the nacelle with exposed engine cylinders in the high-speed condition.

COMPARISON WITH PREVIOUS RESULTS

In the preceding discussion no attempt has been made to compare the results of these tests with those of reference 2. The present tests were made for the specific purpose of comparison, the same nacelles and cowlings being used in both sets of tests. The purpose of the tests with different wings is to show whether the shape and size of the wing has a great influence on the nacelle drag and interference, and also to indicate, if possible, general rules for applying the results to various wings. In the two sets of tests the nacelles were located with the propellers the same actual distances[1] above, below, and forward of the leading edge of the wing. If the efficiency factors with the two wings are in agreement, it must be concluded that the relative spacings are not the predominating factor but that the results are determined by the absolute location of nacelle, propeller, and wing. If the results are not in agreement, then some other explanation is required.

In order to compare the results without omitting any of the factors, it seems best to consider the efficiency factors obtained with some of the arrangements located in the same positions on the two wings. In the following table these are listed for the N.A.C.A. cowled nacelle located in four positions on both the thick wing and the Clark Y wing. The differences between the factors in the two cases are also indicated.

[1] This is not strictly correct. (See fig. 5.)

COMPARISON OF EFFICIENCY FACTORS FOR CLARK Y WING AND THICK WING WITH PROPELLER LOCATED THE SAME ACTUAL DISTANCES FROM THE LEADING EDGE OF THE WING IN EACH CASE

N.A.C.A. COWLED NACELLE

	(1) Clark Y wing.	(2) Thick wing.	(1)−(2)
Nacelle in position B-1-A[1]			
Propulsive efficiency	0.788	0.732	0.056
Nacelle drag efficiency factor	.125	.072	.053
Net efficiency	.663	.660	.003
Nacelle in position B			
Propulsive efficiency	0.760	0.761	−0.001
Nacelle drag efficiency factor	.046	.009	.037
Net efficiency	.714	.752	−.038
Nacelle in position A-1-B[1]			
Propulsive efficiency	0.793	0.719	0.074
Nacelle drag efficiency factor	.151	.079	.072
Net efficiency	.642	.640	.002
Nacelle in position A-2-B			
Propulsive efficiency	0.773	0.770	0.003
Nacelle drag efficiency factor	.135	.161	−.026
Net efficiency	.638	.609	.029

[1] Nacelle faired into wing.

It appears from an examination of this table that the net efficiencies are not greatly different in the two cases, the maximum variation being 3.8 percent. There are, however, considerably greater discrepancies in the propulsive efficiency and nacelle drag efficiency factors. In 3 of the 4 cases, the net efficiency is higher for the Clark Y wing arrangement. The agreement does not seem to be close enough to establish the fact that the net efficiency is purely a function of the actual distance from nacelle and propeller to the wing, or that the net efficiency is independent of the wing section used.

There is some indication that the net efficiencies are more a function of the relative distance between nacelle, propeller, and wing than of the absolute distance. By making use of the contours in reference 1, it is possible to select values of the efficiency factors for conditions for the thick wing where the propeller is located the same relative distance in fractions of the chord from the leading edge of the wing as it is on the Clark Y wing of these tests.

In the following table are listed the efficiency factors for the Clark Y wing, and also for the thick wing propeller-nacelle combinations with the nacelle and propeller located the same fractions of the chord above, below, and forward of the wing as in the Clark Y tests.

COMPARISON OF EFFICIENCY FACTORS FOR CLARK Y WING AND THICK WING WITH PROPELLER LOCATED THE SAME FRACTION OF THE CHORD FROM THE LEADING EDGE OF THE WING IN EACH CASE

N.A.C.A. COWLED NACELLE

	(1) Clark Y wing, these tests.	(2) Thick wing, figs. 14, 15, 16 of reference 1.	(1)−(2)
Nacelle on Clark Y wing in position B-1-A[1]			
Propulsive efficiency	0.788	0.756	0.032
Nacelle drag efficiency factor	.125	.096	.029
Net efficiency	.663	.660	.003
Nacelle on Clark Y wing in position B			
Propulsive efficiency	0.760	0.753	0.007
Nacelle drag efficiency factor	.046	.060	−.014
Net efficiency	.714	.693	.021
Nacelle on Clark Y wing in position A-1-B [1]			
Propulsive efficiency	0.793	0.749	0.044
Nacelle drag efficiency factor	.151	.107	.044
Net efficiency	.642	.642	.000
Nacelle on Clark Y wing in position A-2-B			
Propulsive efficiency	0.773	0.783	−0.010
Nacelle drag efficiency factor	.135	.150	−.015
Net efficiency	.638	.633	.005

[1] Nacelle faired into wing.

It will be noted from this table that the differences between the results are less marked, and that only in the position A-1-B immediately below the wing is the difference of any factor over 3 percent. The difference in this case is perhaps accounted for by the fact that in the tests with the thick wing the hood of the N.A.C.A. cowled nacelle was faired into the leading edge of the wing, whereas in the tests with the Clark Y wing the hood was not faired in. The mean difference in all the factors is 2 percent, and in the net efficiencies 1 percent.

The agreement of these results lends strength to the theory that the relative location of the propeller, nacelle, and wing is the main factor in determining the net efficiencies, at least for cowled engine nacelles. With so many variables operating and considering the unknown separate effects of small changes in the nacelle and wing and propeller, the agreement is rather surprising. It may be safely said then that, to a first approximation, the location of the propeller and the nacelle with reference to different wings should be determined in fractions of the wing chord if the efficiency of the arrangement is to be estimated from results of these tests. With a wing of wide chord the nacelle should then be located a correspondingly greater actual distance ahead of the wing for the best results. By analogy it would seem that if a larger engine is used the propeller and nacelle should be moved forward in proportion to the relative sizes of the engine, enlarging all dimensions of the nacelle in proportion. These statements are equivalent to saying that the geometrical proportions of the nacelle and the wing, both as to size and location of elements, should be kept the same for comparable results. It should be stated that this is not conclusively established as a fact by the test results, but it is true that in a few recent airplanes using larger engines it has been necessary to place the propeller farther ahead of the wing than the 25 percent of the chord recommended as the result of the earlier tests. Besides showing a lower speed, the nacelle located with the propeller too close to the wing indicated a considerable loss of lift at high angles of attack, the possibility of which has previously been pointed out. (See reference 7.) It would seem preferable, therefore, to err in the direction of placing the nacelle too far ahead of the wing than too close.

There may also be some interest in comparing the actual drags and interferences obtained with the two wing arrangements. If this is done it is pointed out that the values of the coefficients C_L and C_D given in this report should be multiplied by two thirds to give coefficients that can be compared directly with the results of references 1 and 2. This is due to the difference in the wing areas of the Clark Y and the thick wing. In most instances, however, designers will probably wish to compute the actual drag, and if the results are computed independently no confusion should arise between the two reports. It is also to be noted that the lift and drag coefficients of the wing alone are of no value in themselves because the wings used in the tests do not represent complete airplane wings.

Finally, it may be said that, despite many minor deviations, the interference of nacelles is largely a function of the relative location of wing and nacelle, and that it is not greatly affected by the cross-sectional shape of the wing. The N.A.C.A. cowled nacelle located directly ahead of the wing is the best arrangement of an air-cooled engine so far found. With uncowled engines there is no great advantage of one nacelle location over another. The advantage of cowling, however, is so much greater than any advantage resulting from nacelle locations that it would seem reasonable to cowl the engine properly before attempting to take advantage of the additional gains resulting from the proper location of the nacelle.

CONCLUSIONS

The following general conclusions may be drawn. Of these, the first five are in agreement with those of reference 2. The last two conclusions result from a comparison of the present data with those previously obtained.

1. The drag and interference of nacelles are reduced by cowling the nacelle. Cowled nacelles located near the wing, however, should be carefully faired into the wing rather than supported by struts only.

2. The propulsive efficiency of propellers on wing-nacelle combinations is reduced by adding cowlings to the nacelle.

3. The net efficiency is greatest for a smooth body or an N.A.C.A. cowled nacelle.

4. The best location for a tractor propeller and nacelle is directly ahead of the leading edge of the wing, the distance being determined by the engine size (25 percent chord minimum).

5. The location of the nacelle and the type of cowling are of importance at high speed but are of relatively little importance at climbing speeds.

6. The net efficiency of a wing-nacelle-propeller combination is but little affected by the airfoil section of the wing. Nacelles with propellers located at the same fractions of the chord from the wing give about the same results for different wing sections.

7. The advantage of cowling is greater than any advantage resulting from nacelle location. Air-cooled engines should be carefully cowled before attempting to take advantage of the additional gains resulting from the proper location of the nacelle.

Langley Memorial Aeronautical Laboratory,
National Advisory Committee for Aeronautics,
Langley Field, Va., *April 20, 1933*

REFERENCES

1. Wood, Donald H.: Tests of Nacelle-Propeller Combinations in Various Positions with Reference to Wings. Part I. Thick Wing—N.A.C.A. Cowled Nacelle—Tractor Propeller. T.R. No. 415, N.A.C.A., 1932.
2. Wood, Donald H.: Tests of Nacelle-Propeller Combinations in Various Positions with Reference to Wings. II—Thick Wing—Various Radial-Engine Cowlings—Tractor Propeller. T.R. No. 436, N.A.C.A., 1932.
3. Weick, Fred E., and Wood, Donald H.: The Twenty-Foot Propeller Research Tunnel of the National Advisory Committee for Aeronautics. T.R. No. 300, N.A.C.A., 1928.
4. Weick, Fred E.: Working Charts for the Selection of Aluminum Alloy Propellers of a Standard Form to Operate with Various Aircraft Engines and Bodies. T.R. No. 350, N.A.C.A., 1930.
5. Wood, Donald H.: Tests of Large Airfoils in the Propeller Research Tunnel, Including Two with Corrugated Surfaces. T.R. No. 336, N.A.C.A., 1929.
6. Windler, Ray: Drag Tests of 4/9-Scale Model Engine Nacelles with Various Cowlings. T.N. No. 432, N.A.C.A., 1932.
7. Windler, Ray: The Effect of Propellers and Nacelles on the Landing Speeds of Tractor Monoplanes. T.N. No. 420, N.A.C.A., 1932.

TABLE I

LIFT COEFFICIENT WITHOUT PROPELLER

$$C_L = \frac{\text{lift}}{qS}$$

Type of nacelle	50 m.p.h.		R.N.=1,360,000		75 m.p.h.		R.N.=2,040,000		100 m.p.h.		R.N.=2,720,000		
Angle of attack	−5°	0°	5°	10°	−5°	0°	5°	10°	−5°	0°	5°	10°	15°
Nacelle position B, with side brackets													
Smooth body	0.025	0.327	0.630	0.935	0.025	0.327	0.630	0.935	0.025	0.327	0.630	0.935	1.180
Exposed cylinders [1]	.052	.312	.575	.855	.052	.312	.575	.842	.052	.312	.575	.840	1.045
N.A.C.A. hood [1]	.033	.330	.626	.920	.033	.327	.619	.915	.033	.323	.613	.902	1.195
N.A.C.A cowled nacelle	.033	.330	.630	.930	.027	.325	.627	.927	.020	.317	.620	.920	1.202
Nacelle position B, without side brackets													
Exposed cylinders [1]	0.045	0.307	0.570	0.830	0.037	0.301	0.567	0.830	0.025	0.293	0.563	0.830	1.027
N.A.C.A. hood [1]	.027	.317	.605	.900	.027	.317	.605	.900	.027	.317	.605	.900	1.163
Variable ring −8° [1]	.030	.315	.600	.886	.030	.315	.600	.886	.030	.315	.600	.886	1.123
Nacelle position C													
Smooth body	0.030	0.330	0.633	0.936	0.022	0.321	0.628	0.931	0.010	0.312	0.617	0.925	1.210
Nacelle position B-1-A, faired into wing													
Exposed cylinders [1]	0.060	0.341	0.625	0.878	0.056	0.337	0.619	0.871	0.050	0.330	0.610	0.864	0.983
N.A.C.A. hood [1]	.058	.348	.637	.910	.058	.348	.637	.910	.058	.348	.637	.910	1.080
N.A.C.A. cowled nacelle	.092	.373	.652	.915	.085	.368	.649	.915	.075	.360	.645	.915	1.043
Variable ring −8° [1]	.048	.336	.627	.908	.048	.336	.627	.908	.048	.336	.627	.908	1.027
Nacelle position C-3-A													
Smooth body	0.035	0.333	0.630	0.930	0.030	0.328	0.627	0.928	0.020	0.320	0.623	0.925	1.197
Nacelle position A-1-B, faired into wing													
Exposed cylinders [1]	0.015	0.295	0.578	0.860	0.015	0.295	0.578	0.860	0.015	0.295	0.578	0.860	1.113
N.A.C.A. hood [1]	.000	.286	.575	.860	−.004	.283	.571	.858	−.010	.278	.565	.855	1.125
Variable ring −8° [1]	.010	.275	.545	.815	.006	.271	.541	.811	.000	.265	.535	.805	1.020
N.A.C.A. cowled nacelle	−.026	.257	.540	.827	−.026	.257	.540	.827	−.026	.257	.540	.827	1.093
Nacelle position A-2-B													
Smooth body	0.030	0.322	0.610	0.902	0.023	0.319	0.606	0.897	0.023	0.310	0.600	0.890	1.182
Exposed cylinders [1]	.055	.342	.628	.915	.042	.332	.620	.905	.024	.313	.600	.890	1.182
N.A.C.A. hood [1]	.020	.312	.605	.900	.018	.309	.603	.899	.015	.305	.600	.897	1.192
Variable ring −8° [1]	.020	.310	.595	.885	.020	.310	.595	.885	.020	.310	.595	.885	1.160
N.A.C.A. cowled nacelle	.020	.312	.602	.890	.015	.305	.595	.885	.005	.295	.585	.878	1.167
Nacelle position C-3-B													
Smooth body	0.005	0.313	0.619	0.923	0.005	0.313	0.619	0.923	0.005	0.313	0.619	0.923	1.205
Wing alone													
	0.070	0.359	0.646	0.934	0.065	0.354	0.642	0.928	0.059	0.348	0.637	0.920	1.205

[1] Small nacelle.

TABLE II

DRAG COEFFICIENT WITHOUT PROPELLER

$$C_D = \frac{\text{drag}}{qS}$$

Type of nacelle	50 m.p.h. R.N.=1,350,000				75 m.p.h. R.N.=2,040,000				100 m.p.h. R.N.=2,720,000				
Angle of attack	−5°	0°	5°	10°	−5°	0°	5°	10°	−5°	0°	5°	10°	15°
Nacelle position B, with side brackets													
Smooth body	0.0120	0.0220	0.0525	0.1070	0.0118	0.0216	0.0525	0.1070	0.0115	0.0210	0.0525	0.1070	0.1910
Exposed cylinders [1]	.0320	.0400	.0680	.1230	.0390	.0375	.0660	.1210	.0250	.0325	.0620	.1185	.1970
N.A.C.A. hood [1]	.0180	.0270	.0575	.1100	.0180	.0270	.0578	.1108	.0180	.0270	.0585	.1120	.1840
N.A.C.A. cowled nacelle	.0125	.0230	.0545	.1080	.0125	.0225	.0541	.1077	.0125	.0215	.0535	.1070	.1900
Nacelle position B, without side brackets													
Exposed cylinders [1]	0.0320	0.0390	0.0695	0.1260	0.0310	0.0383	0.0685	0.1240	0.0290	0.0370	0.0670	0.1210	0.1990
N.A.C.A. hood [1]	.0215	.0320	.0625	.1140	.0207	.0312	.0615	.1140	.0190	.0290	.0600	.1140	.1840
Variable ring −8° [1]	.0235	.0335	.0640	.1200	.0227	.0325	.0635	.1192	.0215	.0310	.0625	.1180	.1870
Nacelle position C													
Smooth body	0.0120	0.0230	0.0550	0.1100	0.0120	0.0230	0.0550	0.1100	0.0120	0.0230	0.0550	0.1100	0.1890
Nacelle position B-1-A, faired into wing													
Exposed cylinders [1]	0.0320	0.0475	0.0810	0.1430	0.0305	0.0465	0.0802	0.1415	0.0280	0.0445	0.0790	0.1390	0.2250
N.A.C.A. hood [1]	.0230	.0375	.0735	.1330	.0222	.0365	.0725	.1326	.0210	.0350	.0705	.1320	.2250
N.A.C.A. cowled nacelle	.0185	.0330	.0690	.1365	.0170	.0320	.0680	.1350	.0155	.0300	.0660	.1330	.2220
Variable ring −8° [1]	.0260	.0400	.0785	.1370	.0253	.0385	.0770	.1363	.0240	.0360	.0740	.1350	.2290
Nacelle position C-3-A													
Smooth body	0.0201	0.0325	0.0630	0.1150	0.0185	0.0305	0.0615	0.1135	0.0160	0.0270	0.0595	0.1115	0.1770
Nacelle position A-1-B, faired into wing													
Exposed cylinders [1]	0.0400	0.0400	0.0630	0.1070	0.0390	0.0390	0.0620	0.1060	0.0375	0.0375	0.0600	0.1010	0.1670
N.A.C.A. hood [1]	.0270	.0315	.0555	.1010	.0263	.0305	.0553	.1010	.0250	.0290	.0550	.1010	.1640
Variable ring −8° [1]	.0310	.0340	.0590	.1110	.0295	.0333	.0590	.1110	.0270	.0320	.0590	.1110	.1970
N.A.C.A. cowled nacelle	.0215	.0275	.0520	.0960	.0200	.0260	.0513	.0958	.0180	.0240	.0500	.0955	.1595
Nacelle position A-2-B													
Smooth body	0.0201	0.0270	0.0565	0.1035	0.0190	0.0263	0.0555	0.1025	0.0175	0.0250	0.0540	0.1010	0.1655
Exposed cylinders [1]	.0425	.0450	.0700	.1165	.0415	.0442	.0696	.1160	.0400	.0430	.0690	.1150	.1750
N.A.C.A. hood [1]	.0300	.0345	.0630	.1100	.0285	.0340	.0622	.1100	.0260	.0330	.0610	.1100	.1750
Variable ring −8° [1]	.0300	.0350	.0625	.1125	.0290	.0348	.0625	.1125	.0275	.0345	.0625	.1125	.1790
N.A.C.A. cowled nacelle	.0215	.0275	.0555	.1025	.0200	.0268	.0550	.1027	.0180	.0255	.0540	.1030	.1670
Nacelle position C-3-B													
Smooth body	0.0220	0.0305	0.0585	0.1070	0.0205	0.0295	0.0570	0.1066	0.0180	0.0270	0.0550	0.1060	0.1710
Wing alone													
	0.0096	0.0210	0.0522	0.1011	0.0092	0.0202	0.0509	0.1012	0.0086	0.0192	0.0492	0.1013	0.1656

[1] Small nacelle.

TABLE III

MOMENT COEFFICIENT WITHOUT PROPELLER

$$C_m = \frac{\text{moment}}{qSc}$$

Type of nacelle	Angle of attack				
	−5°	0°	5°	10°	15°
Nacelle position B, with side brackets					
Smooth body	−0.079	−0.063	−0.043	−0.039	−0.050
Exposed cylinders [1]	−.062	−.058	−.049	−.040	−.051
N.A.C.A. hood [1]	−.071	−.049	−.034	−.031	−.031
N.A.C.A. cowled nacelle	−.071	−.053	−.041	−.034	−.039
Nacelle position B, without side brackets					
Exposed cylinders [1]	−0.072	−0.064	−0.053	−0.047	−0.054
N.A.C.A. hood [1]	−.074	−.060	−.048	−.034	−.035
Variable ring −8° [1]	−.075	−.060	−.045	−.035	−.030
Nacelle position C					
Smooth body	−0.078	−0.058	−0.038	−0.023	−0.016
Nacelle position B-1-A, faired into wing					
Exposed cylinders [1]	−0.057	−0.054	−0.043	−0.038	−0.068
N.A.C.A. hood [1]	−.064	−.039	−.030	−.034	−.060
N.A.C.A. cowled nacelle	−.061	−.046	−.030	−.037	−.071
Variable ring −8° [1]	−.062	−.050	−.034	−.026	−.051
Nacelle position C-3-A					
Smooth body	−0.060	−0.043	−0.037	−0.039	−0.031
Nacelle position A-1-B, faired into wing					
Exposed cylinders [1]	−0.078	−0.075	−0.068	−0.056	−0.062
N.A.C.A. hood [1]	−.086	−.078	−.065	−.064	−.056
Variable ring −8° [1]	−.078	−.070	−.061	−.058	−.071
N.A.C.A. cowled nacelle	−.071	−.069	−.060	−.055	−.056
Nacelle position A-2-B					
Smooth body	−0.079	−0.068	−0.064	−0.064	−0.067
Exposed cylinders [1]	−.079	−.077	−.070	−.060	−.063
N.A.C.A. hood [1]	−.082	−.071	−.069	−.064	−.062
Variable ring −8° [1]	−.085	−.074	−.068	−.066	−.063
N.A.C.A. cowled nacelle	−.079	−.067	−.067	−.063	−.058
Nacelle position C-3-B					
Smooth body	−0.085	−0.088	−0.073	−0.064	−0.066

[1] Small nacelle.

TABLE IV

THRUST COEFFICIENT

$$C_T = \frac{(T - \Delta D)}{\rho\, n^2 D^4}$$

Propeller No. 4412—4 feet. Set 17° at 0.75 R. Angle of attack = −5°

Type of nacelle	$\frac{V}{nD}$									
	0.1	0.2	0.3	0.4	0.5	0.6	0.7	0.8	0.9	1.0
Nacelle position B, with side brackets										
Smooth body	0.0828	0.0778	0.0712	0.0628	0.0524	0.0405	0.0272	0.0125	−0.0042	−0.0217
Exposed cylinders [1]	.0863	.0821	.0761	.0680	.0584	.0467	.0337	.0193	.0037	−.0125
N.A.C.A. hood	.0862	.0815	.0749	.0667	.0567	.0450	.0313	.0154	−.0013	−.0198
N.A.C.A. cowled nacelle	.0862	.0811	.0743	.0661	.0564	.0452	.0319	.0165	−.0001	−.0189
Nacelle position B, without side brackets										
Exposed cylinders [1]	0.0920	0.0871	0.0805	0.0723	0.0623	0.0509	0.0380	0.0227	0.0065	−0.0111
N.A.C.A. hood [1]	.0902	.0854	.0788	.0706	.0605	.0487	.0355	.0201	.0035	−.0146
Variable ring −8° [1]	.0900	.0851	.0787	.0704	.0603	.0489	.0356	.0212	.0050	−.0129
Nacelle position C										
Smooth body	0.0836	0.0788	0.0720	0.0637	0.0531	0.0412	0.0275	0.0120	−0.0052	−0.0245
Nacelle position B-1-A, faired into wing										
Exposed cylinders [1]	0.0908	0.0865	0.0806	0.0728	0.0629	0.0510	0.0376	0.0224	0.0058	−0.0110
N.A.C.A. hood [1]	.0891	.0853	.0790	.0711	.0611	.0493	.0360	.0212	.0056	−.0103
N.A.C.A. cowled nacelle	.0899	.0850	.0786	.0709	.0605	.0492	.0365	.0220	.0065	−.0102
Variable ring −8° [1]	.0891	.0848	.0789	.0710	.0611	.0497	.0369	.0230	.0072	−.0100
Nacelle position C-3-A										
Smooth body	0.0833	0.0788	0.0723	0.0639	0.0537	0.0414	0.0275	0.0125	−0.0025	−0.0210
Nacelle position A-1-B, faired into wing										
Exposed cylinders [1]	0.0880	0.0834	0.0772	0.0696	0.0600	0.0490	0.0367	0.0234	0.0097	−0.0050
N.A.C.A. hood [1]	.0852	.0805	.0741	.0660	.0565	.0450	.0320	.0188	.0040	−.0106
Variable ring −8° [1]	.0860	.0817	.0751	.0668	.0569	.0451	.0320	.0180	.0030	−.0130
N.A.C.A. cowled nacelle	.0865	.0814	.0747	.0664	.0565	.0458	.0329	.0185	.0035	−.0125
Nacelle position A-2-B										
Smooth body	0.0879	0.0831	0.0765	0.0680	0.0572	0.0445	0.0300	0.0140	−0.0028	−0.0209
Exposed cylinders [1]	.0890	.0845	.0782	.0701	.0603	.0485	.0350	.0201	.0045	−.0121
N.A.C.A. hood [1]	.0867	.0818	.0751	.0668	.0566	.0444	.0309	.0161	.0006	−.0170
Variable ring −8° [1]	.0893	.0849	.0787	.0702	.0601	.0480	.0344	.0195	.0032	−.0144
N.A.C.A. cowled nacelle	.0872	.0823	.0757	.0672	.0570	.0451	.0312	.0155	−.0012	−.0193
Nacelle position C-3-B										
Smooth body	0.0859	0.0804	0.0733	0.0645	0.0538	0.0415	0.0278	0.0130	−0.0030	−0.0195

[1] Small nacelle.

TABLE IV—Continued

THRUST COEFFICIENT

$$C_T=\frac{(T-\Delta D)}{\rho\, n^2 D^4}$$

Propeller No. 4412—4 feet. Set 17° at 0.75 R. Angle of attack=0°

Type of nacelle	$\frac{V}{nD}$									
	0.1	0.2	0.3	0.4	0.5	0.6	0.7	0.8	0.9	1.0
Nacelle position B, with side brackets										
Smooth body	0.0827	0.0777	0.0712	0.0628	0.0527	0.0403	0.0268	0.0125	−0.0036	−0.0211
Exposed cylinders [1]	.0861	.0814	.0751	.0673	.0576	.0465	.0336	.0193	.0037	−.0126
N.A.C.A. hood [1]	.0862	.0815	.0750	.0665	.0564	.0446	.0312	.0162	.0000	−.0169
N.A.C.A. cowled nacelle	.0852	.0804	.0740	.0660	.0562	.0447	.0310	.0152	−.0014	−.0291
Nacelle position B, without side brackets										
Exposed cylinders [1]	0.0903	0.0856	0.0792	0.0711	0.0613	0.0500	0.0372	0.0225	0.0064	−0.0112
N.A.C.A. hood [1]	.0896	.0847	.0781	.0698	.0595	.0477	.0344	.0192	.0028	−.0151
Variable ring−8° [1]	.0907	.0856	.0788	.0704	.0601	.0484	.0353	.0200	.0039	−.0140
Nacelle position C										
Smooth body	0.0827	0.0780	0.0714	0.0630	0.0525	0.0405	0.0267	0.0105	−0.0068	−0.0261
Nacelle position B-1-A, faired into wing										
Exposed cylinders [1]	0.0908	0.0862	0.0800	0.0718	0.0618	0.0499	0.0371	0.0202	0.0058	−0.0108
N.A.C.A. hood [1]	.0893	.0842	.0776	.0690	.0588	.0480	.0350	.0197	.0035	−.0128
N.A.C.A. cowled nacelle	.0895	.0842	.0772	.0686	.0584	.0469	.0340	.0195	.0032	−.0145
Variable ring−8° [1]	.0884	.0837	.0772	.0690	.0589	.0468	.0336	.0185	.0018	−.0165
Nacelle position C-3-A										
Smooth body	0.0833	0.0787	0.0722	0.0640	0.0535	0.0412	0.0273	0.0120	−0.0040	−0.0212
Nacelle position A-1-B, faired into wing										
Exposed cylinders [1]	0.0882	0.0840	0.0780	0.0700	0.0601	0.0495	0.0362	0.0223	0.0081	−0.0070
N.A.C.A. hood [1]	.0860	.0820	.0760	.0680	.0581	.0463	.0330	.0194	.0045	−.0112
Variable ring−8° [1]	.0868	.0820	.0759	.0678	.0580	.0465	.0340	.0204	.0062	−.0085
N.A.C.A. cowled nacelle	.0870	.0820	.0760	.0675	.0580	.0460	.0337	.0200	.0059	−.0090
Nacelle position A-2-B										
Smooth body	0.0879	0.0831	0.0764	0.0680	0.0575	0.0451	0.0314	0.0157	−0.0010	−0.0181
Exposed cylinders [1]	.0890	.0844	.0781	.0701	.0604	.0490	.0357	.0215	.0066	−.0096
N.A.C.A. hood [1]	.0864	.0817	.0751	.0670	.0572	.0458	.0329	.0186	.0036	−.0149
Variable ring−8° [1]	.0898	.0853	.0790	.0710	.0610	.0496	.0366	.0225	.0067	−.0105
N.A.C.A. cowled nacelle	.0873	.0822	.0756	.0672	.0571	.0457	.0330	.0183	.0022	−.0161
Nacelle position C-3-B										
Smooth body	0.0857	0.0802	0.0733	0.0647	0.0540	0.0425	0.0285	0.0128	−0.0040	−0.0220

[1] Small nacelle.

TABLE IV—Continued

THRUST COEFFICIENT

$$C_T=\frac{(T-\Delta D)}{\rho n^2 D^4}$$

Propeller No. 4412—4 feet. Set 17° at 0.75 R. Angle of attack=5°

Type of nacelle	$\frac{V}{nD}$ 0.1	0.2	0.3	0.4	0.5	0.6	0.7	0.8	0.8	1.0
Nacelle position B, with side brackets										
Smooth body	0.0808	0.0757	0.0690	0.0604	0.0503	0.0388	0.0265	0.0125	−0.0028	−0.0186
Exposed cylinders [1]	.0857	.0807	.0741	.0660	.0560	.0448	.0322	.0188	.0034	−.0145
N.A.C.A. hood [1]	.0854	.0800	.0730	.0645	.0545	.0435	.0312	.0172	.0010	−.0172
N.A.C.A. cowled nacelle	.0834	.0784	.0719	.0637	.0540	.0428	.0297	.0144	−.0021	−.0201
Nacelle position B, without side brackets										
Exposed cylinders [1]	0.0899	0.0850	0.0781	0.0696	0.0598	0.0487	0.0358	0.0216	0.0065	−0.0095
N.A.C.A. hood [1]	.0888	.0840	.0774	.0690	.0585	.0467	.0333	.0187	.0030	−.0139
Variable ring −8° [1]	.0900	.0850	.0781	.0695	.0592	.0473	.0340	.0200	.0046	−.0118
Nacelle position C										
Smooth body	0.0838	0.0781	0.0708	0.0621	0.0518	0.0398	0.0263	0.0110	−0.0063	−0.0255
Nacelle position B-1-A, faired into wing										
Exposed cylinders [1]	0.0880	0.0832	0.0770	0.0685	0.0585	0.0467	0.0335	0.0197	0.0050	−0.0105
N.A.C.A. hood [1]	.0874	.0826	.0762	.0679	.0573	.0450	.0310	.0167	.0013	−.0152
N.A.C.A. cowled nacelle	.0875	.0823	.0758	.0672	.0570	.0453	.0320	.0172	.0014	−.0155
Variable ring −8° [1]	.0867	.0820	.0757	.0676	.0579	.0465	.0336	.0195	.0042	−.0120
Nacelle position C-3-A										
Smooth body	0.0833	0.0788	0.0723	0.0640	0.0537	0.0415	0.0275	0.0122	−0.0044	−0.0220
Nacelle position A-1-B, faired into wing										
Exposed cylinders [1]	0.0890	0.0840	0.0780	0.0699	0.0600	0.0489	0.0362	0.0226	0.0080	−0.0075
N.A.C.A. hood [1]	.0862	.0817	.0750	.0668	.0570	.0458	.0332	.0200	.0060	−.0090
Variable ring −8° [1]	.0870	.0820	.0760	.0677	.0582	.0472	.0351	.0225	.0095	−.0041
N.A.C.A. cowled nacelle	.0870	.0825	.0760	.0681	.0585	.0470	.0349	.0219	.0078	−.0065
Nacelle position A-2-B										
Smooth body	0.0870	0.0821	0.0755	0.0675	0.0576	0.0457	0.0329	0.0195	0.0055	−0.0083
Exposed cylinders [1]	.0882	.0831	.0764	.0684	.0590	.0483	.0369	.0242	.0103	−.0044
N.A.C.A. hood [1]	.0864	.0816	.0752	.0671	.0575	.0463	.0343	.0216	.0081	−.0070
Variable ring −8° [1]	.0892	.0845	.0782	.0703	.0608	.0498	.0375	.0244	.0105	−.0121
N.A.C.A. cowled nacelle	.0871	.0821	.0753	.0671	.0572	.0460	.0339	.0205	.0064	−.0090
Nacelle position C-3-B										
Smooth body	0.0852	0.0800	0.0731	0.0646	0.0540	0.0423	0.0290	0.0146	−0.0005	−0.0170

[1] Small nacelle.

TABLE IV—Continued

THRUST COEFFICIENT

$$C_T=\frac{(T-\Delta D)}{\rho n^2 D^4}$$

Propeller No. 4412—4 feet. Set 17° at 0.75 R. Angle of attack=10°

Type of Nacelle	$\frac{V}{nD}$									
	0.1	0.2	0.3	0.4	0.5	0.6	0.7	0.8	0.9	1.0
Nacelle position B, with side brackets										
Smooth body	0.0787	0.0732	0.0664	0.0578	0.0478	0.0365	0.0244	0.0115	−0.0021	−0.0166
Exposed cylinders [1]	.0835	.0786	.0720	.0639	.0540	.0430	.0303	.0172	.0015	−.0151
N.A.C.A. hood [1]	.0830	.0770	.0696	.0607	.0505	.0395	.0275	.0152	.0019	−.0121
N.A.C.A. cowled nacelle	.0821	.0770	.0700	.0614	.0513	.0401	.0274	.0135	−.0015	−.0173
Nacelle position B, without side brackets										
Exposed cylinders [1]	0.0880	0.0827	0.0758	0.0673	0.0577	0.0468	0.0350	0.0219	0.0077	−0.0075
N.A.C.A. hood [1]	.0872	.0813	.0737	.0646	.0545	.0430	.0308	.0173	.0028	−.0127
Variable ring −8° [1]	.0873	.0814	.0742	.0655	.0557	.0448	.0325	.0197	.0056	−.0086
Nacelle position C										
Smooth body	0.0800	0.0749	0.0678	0.0591	0.0486	0.0370	0.0235	0.0090	−0.0065	−0.0234
Nacelle position B-1-A, faired into wing										
Exposed cylinders [1]	0.0859	0.0811	0.0755	0.0678	0.0580	0.0464	0.0332	0.0189	0.0038	−0.0121
N.A.C.A. hood [1]	.0852	.0800	.0730	.0640	.0540	.0434	.0313	.0180	.0041	−.0100
N. A. C. A. cowled nacelle	.0853	.0798	.0725	.0637	.0535	.0421	.0297	.0157	.0010	−.0151
Variable ring −8° [1]	.0851	.0796	.0725	.0640	.0543	.0436	.0318	.0188	.0050	−.0065
Nacelle position C-3-A										
Smooth body	0.0820	0.0775	0.0711	0.0628	0.0524	0.0403	0.0266	0.0117	−.0045	−0.0218
Nacelle position A-1-B, faired into wing										
Exposed cylinders [1]	0.0875	0.0825	0.0760	0.0677	0.0580	0.0468	0.0348	0.0220	0.0085	−0.0055
N.A.C.A. hood [1]	.0850	.0800	.0740	.0658	.0562	.0455	.0341	.0220	.0095	−.0040
Variable ring −8° [1]	.0855	.0808	.0745	.0670	.0581	.0482	.0377	.0266	.0152	.0030
N.A.C.A. cowled nacelle	.0860	.0810	.0740	.0660	.0565	.0461	.0347	.0229	.0106	−.0023
Nacelle position A-2-B										
Smooth body	0.0858	0.0806	0.0740	0.0660	0.0565	0.0457	0.0339	0.0212	0.0079	−0.0059
Exposed cylinders [1]	.0870	.0816	.0748	.0665	.0571	.0464	.0351	.0230	.0104	−.0023
N.A.C.A. hood [1]	.0854	.0800	.0730	.0650	.0558	.0452	.0340	.0221	.0096	−.0037
Variable ring −8° [1]	.0885	.0836	.0770	.0691	.0599	.0495	.0382	.0263	.0140	.0015
N.A.C.A. cowled nacelle	.0860	.0817	.0738	.0654	.0558	.0448	.0332	.0213	.0092	−.0026
Nacelle position C-3-B										
Smooth body	0.0850	0.0803	0.0735	0.0648	0.0542	0.0423	0.0296	0.0160	0.0020	−0.0125

[1] Small nacelle.

TABLE V

POWER COEFFICIENT

$$C_P = \frac{P}{\rho n^3 D^5}$$

Propeller No. 4412—4 feet. Set 17° at 0.75 R. Angle of attack = −5°

Type of nacelle	$\frac{V}{nD}$									
	0.1	0.2	0.3	0.4	0.5	0.6	0.7	0.8	0.9	1.0
Nacelle position B, with side brackets										
Smooth body	0.0407	0.0407	0.0403	0.0393	0.0370	0.0320	0.0254	0.0165	0.0054	---------
Exposed cylinders [1]	.0448	.0449	.0441	.0426	.0399	.0355	.0290	.0205	.0101	---------
N.A.C.A. hood [1]	.0448	.0450	.0445	.0432	.0406	.0360	.0292	.0200	.0095	---------
N.A.C.A. cowled nacelle	.0450	.0447	.0438	.0420	.0393	.0351	.0290	.0205	.0100	---------
Nacelle position B, without side brackets										
Exposed cylinders [1]	0.0443	0.0441	0.0435	.00420	0.0397	0.0363	0.0311	0.0231	0.0124	---------
N.A.C.A. hood [1]	.0430	.0431	.0425	.0413	.0390	.0355	.0300	.0219	.0110	---------
Variable ring—8° [1]	.0438	.0437	.0430	.0417	.0393	.0356	.0300	.0220	.0115	---------
Nacelle position C										
Smooth body	0.0397	0.0397	0.0390	0.0375	0.0349	0.0310	0.0245	0.0153	0.0033	---------
Nacelle position B-1-A, faired into wing										
Exposed cylinders [1]	0.0443	0.0442	0.0435	0.0420	0.0398	0.0361	0.0306	0.0226	0.0120	---------
N.A.C.A. hood [1]	.0452	.0449	.0441	.0426	.0400	.0361	.0306	.0229	.0124	---------
N.A.C.A. cowled nacelle	.0450	.0447	.0438	.0423	.0399	.0364	.0311	.0230	.0127	---------
Variable ring −8° [1]	.0456	.0453	.0445	.0428	.0400	.0360	.0304	.0226	.0118	---------
Nacelle position C-3-A										
Smooth body	0.0407	0.0406	0.0403	0.0391	0.0362	0.0315	0.0249	0.0160	0.0051	---------
Nacelle position A-1-B, faired into wing										
Exposed cylinders [1]	0.0435	0.0435	0.0430	0.0416	0.0390	0.0355	0.0306	0.0230	0.0135	0.0020
N. A.C.A. hood [1]	.0430	.0429	.0420	.0403	.0380	.0346	.0294	.0217	.0110	---------
Variable ring −8° [1]	.0429	.0426	.0420	.0408	.0382	.0345	.0287	.0209	.0108	---------
N.A.C.A cowled nacelle	.0420	.0422	.0420	.0409	.0387	.0352	.0297	.0218	.0115	---------
Nacelle position A-2-B										
Smooth body	0.0427	0.0435	0.0428	0.0411	0.0382	0.0339	0.0272	0.0180	0.0061	---------
Exposed cylinders [1]	.0439	.0440	.0434	.0420	.0396	.0356	.0294	.0209	.0102	---------
N.A.C.A hood [1]	.0443	.0441	.0432	.0416	.0388	.0343	.0280	.0195	.0078	---------
Variable ring −8° [1]	.0445	.0443	.0436	.0420	.0395	.0355	.0298	.0212	.0102	---------
N.A.C.A. cowled nacelle	.0443	.0442	.0433	.0417	.0390	.0348	.0284	.0200	.0084	---------
Nacelle position C-3-B										
Smooth body	0.0416	0.0416	0.0409	0.0395	0.0366	0.0320	0.0251	0.0164	0.0051	---------

[1] Small nacelle.

TABLE V—Continued

POWER COEFFICIENT

$$C_P=\frac{P}{\rho n^3 D^5}$$

Propeller No. 4412—4 feet. Set 17° at 0.75 R. Angle of attack=0°

Type of nacelle	$\frac{V}{nD}$									
	0.1	0.2	0.3	0.4	0.5	0.6	0.7	0.8	0.9	1.0
Nacelle position B, with side brackets										
Smooth body	0.0415	0.0413	0.0405	0.0393	0.0368	0.0320	0.0252	0.0165	0.0054	--------
Exposed cylinders [1]	.0447	.0445	.0436	.0421	.0395	.0354	.0289	.0203	.0095	--------
N.A.C.A. hood [1]	.0447	.0449	.0442	.0427	.0400	.0359	.0290	.0204	.0096	--------
N.A.C.A. cowled nacelle	.0450	.0449	.0442	.0425	.0397	.0355	.0290	.0202	.0095	--------
Nacelle position B, without side brackets										
Exposed cylinders [1]	0.0446	0.0445	0.0439	0.0426	0.0404	0.0369	0.0312	0.0231	0.0123	--------
N.A.C.A. hood [1]	.0430	.0431	.0426	.0418	.0390	.0353	.0296	.0213	.0106	--------
Variable ring—8° [1]	.0436	.0435	.0428	.0414	.0391	.0356	.0300	.0218	.0110	--------
Nacelle position C										
Smooth body	0.0402	0.0404	0.0397	0.0381	0.0351	0.0306	0.0238	0.0144	0.0015	--------
Nacelle position B-1-A, faired into wing										
Exposed cylinders [1]	0.0443	0.0441	0.0439	0.0421	0.0398	0.0360	0.0302	0.0203	0.0119	--------
N.A.C.A. hood [1]	.0450	.0447	.0440	.0426	.0399	.0365	.0306	.0220	.0110	--------
N.A.C.A. cowled nacelle	.0454	.0451	.0443	.0427	.0403	.0363	.0303	.0221	.0114	--------
Variable ring—8° [1]	.0453	.0450	.0442	.0425	.0399	.0360	.0303	.0222	.0111	--------
Nacelle position C-3-A										
Smooth body	0.0416	0.0417	0.0409	0.0393	0.0364	0.0319	0.0251	0.0161	0.0050	--------
Nacelle position A-1-B, faired into wing										
Exposed cylinders [1]	0.0434	0.0435	0.0430	0.0419	0.0390	0.0358	0.0302	0.0224	0.0135	0.0023
N.A.C.A hood [1]	.0430	.0430	.0424	.0410	.0389	.0354	.0300	.0224	.0128	--------
Variable ring—8° [1]	.0426	.0428	.0421	.0410	.0390	.0351	.0299	.0220	.0127	--------
N.A.C.A. cowled nacelle	.0420	.0420	.0418	.0410	.0385	.0351	.0298	.0220	.0125	.0008
Nacelle position A-2-B										
Smooth body	0.0437	0.0435	0.0428	0.0411	0.0384	0.0343	0.0284	0.0198	0.0089	--------
Exposed cylinders [1]	.0438	.0438	.0433	.0420	.0395	.0359	.0300	.0221	.0122	--------
N.A.C.A. hood [1]	.0446	.0444	.0438	.0419	.0394	.0356	.0296	.0217	.0110	--------
Variable ring—8° [1]	.0447	.0447	.0441	.0427	.0403	.0365	.0310	.0233	.0130	--------
N.A.C.A. cowled nacelle	.0443	.0442	.0435	.0419	.0393	.0356	.0299	.0215	.0110	--------
Nacelle position C-3-B										
Smooth body	0.0408	0.0412	0.0410	0.0397	0.0373	0.0330	0.0262	0.0171	0.0053	--------

[1] Small nacelle.

TABLE V—Continued

POWER COEFFICIENT

$$C_P=\frac{P}{\rho n^3 D^5}$$

Propeller No. 4412—4 feet. Set 17° at 0.75 R. Angle of attack=5°

Type of nacelle	$\frac{V}{nD}$									
	0.1	0.2	0.3	0.4	0.5	0.6	0.7	0.8	0.9	1.0
Nacelle position B, with side brackets										
Smooth body	0.0418	0.0415	0.0407	0.0392	0.0367	0.0320	0.0252	0.0164	0.0051	--------
Exposed cylinders [1]	.0458	.0457	.0446	.0428	.0400	.0360	.0295	.0206	.0095	--------
N.A.C.A. hood [1]	.0447	.0448	.0440	.0425	.0399	.0355	.0290	.0203	.0098	--------
N.A.C.A. cowled nacelle	.0451	.0450	.0442	.0427	.0399	.0355	.0292	.0205	.0100	--------
Nacelle position B, without side brackets										
Exposed cylinders [1]	0.0444	0.0444	0.0439	0.0427	0.0404	0.0366	0.0310	0.0232	0.0123	--------
N.A.C.A. hood [1]	.0438	.0438	.0432	.0420	.0398	.0359	.0299	.0215	.0112	--------
Variable ring −8° [1]	.0446	.0445	.0439	.0425	.0402	.0363	.0301	.0217	.0109	--------
Nacelle position C										
Smooth body	0.0415	0.0411	0.0403	0.0390	0.0363	0.0322	0.0254	0.0160	0.0038	--------
Nacelle position B-1-A, faired into wing										
Exposed cylinders [1]	0.0455	0.0450	0.0442	0.0427	0.0400	0.0357	0.0299	0.0219	0.0110	--------
N.A.C.A. hood [1]	.0447	.0446	.0440	.0425	.0399	.0367	.0292	.0216	.0110	--------
N.A.C.A. cowled nacelle	.0445	.0445	.0440	.0427	.0401	.0363	.0301	.0219	.0110	--------
Variable ring −8° [1]	.0450	.0448	.0439	.0423	.0399	.0360	.0300	.0217	.0105	--------
Nacelle position C-3-A										
Smooth body	0.0424	0.0420	0.0413	0.0400	0.0371	0.0323	0.0255	0.0165	0.0052	--------
Nacelle position A-1-B, faired into wing										
Exposed cylinders [1]	0.0430	0.0430	0.0427	0.0416	0.0391	0.0359	0.0305	0.0229	0.0140	0.0030
N.A.C.A. hood [1]	.0440	.0438	.0430	.0418	.0394	.0360	.0306	.0231	.0136	.0020
Variable ring −8° [1]	.0426	.0430	.0423	.0415	.0394	.0361	.0310	.0237	.0140	.0025
N.A.C.A. cowled nacelle	.0420	.0426	.0421	.0411	.0392	.0360	.0309	.0237	.0146	.0033
Nacelle position A-2-B										
Smooth body	0.0443	0.0441	0.0433	0.0418	0.0393	0.0355	0.0300	0.0221	0.0123	--------
Exposed cylinders [1]	.0436	.0436	.0430	.0418	.0397	.0365	.0316	.0243	.0150	0.0031
N.A.C.A. hood [1]	.0451	.0448	.0438	.0421	.0397	.0359	.0308	.0240	.0138	.0013
Variable ring −8° [1]	.0448	.0445	.0439	.0425	.0402	.0369	.0318	.0244	.0152	.0036
N.A.C.A. cowled nacelle	.0442	.0443	.0438	.0425	.0403	.0368	.0315	.0240	.0142	.0018
Nacelle position C-3-B										
Smooth body	0.0412	0.0420	0.0419	0.0405	0.0377	0.0328	0.0267	0.0180	0.0071	--------

[1] Small nacelle.

TABLE V.—Continued

POWER COEFFICIENT

$$C_P=\frac{P}{\rho n^3 D^5}$$

Propeller No. 4412—4 feet. Set 17° at 0.75 R. Angle of attack=10°

Type of nacelle	$\frac{V}{nD}$									
	0.1	0.2	0.3	0.4	0.5	0.6	0.7	0.8	0.9	1.0
Nacelle position B, with side brackets										
Smooth body	0.0417	0.0413	0.0405	0.0393	0.0368	0.0320	0.0257	0.0173	0.0071	--------
Exposed cylinders [1]	.0460	.0461	.0452	.0434	.0404	.0361	.0305	.0230	.0122	--------
N.A.C.A. hood [1]	.0447	.0450	.0444	.0431	.0403	.0357	.0288	.0202	.0095	--------
N.A.C.A. cowled nacelle	.0453	.0452	.0443	.0427	.0400	.0358	.0295	.0212	.0110	--------
Nacelle position B, without side brackets										
Exposed cylinders [1]	0.0443	0.0443	0.0438	0.0424	0.0403	0.0369	0.0318	0.0242	0.0141	--------
N.A.C.A. hood [1]	.0440	.0441	.0437	.0423	.0401	.0365	.0310	.0228	.0127	--------
Variable ring −8° [1]	.0445	.0445	.0440	.0427	.0404	.0368	.0310	.0233	.0135	--------
Nacelle position C										
Smooth body	0.0405	0.0410	0.0405	0.0393	0.0366	0.0320	0.0248	0.0149	0.0018	--------
Nacelle position B-1-A, faired into wing										
Exposed cylinders [1]	0.0455	0.0453	0.0450	0.0430	0.0410	0.0372	0.0314	0.0230	0.0125	--------
N.A.C.A. hood [1]	.0446	.0449	.0442	.0430	.0400	.0361	.0300	.0211	.0107	--------
N.A.C.A. cowled nacelle	.0442	.0447	.0444	.0431	.0408	.0366	.0306	.0223	.0113	--------
Variable ring −8° [1]	.0444	.0448	.0444	.0431	.0407	.0369	.0308	.0224	.0115	--------
Nacelle position C-3-A										
Smooth body	0.0427	0.0422	0.0412	0.0392	0.0367	0.0319	0.0250	0.0160	0.0044	--------
Nacelle position A-1-B, faired into wing										
Exposed cylinders [1]	0.0420	0.0420	0.0420	0.0412	0.0396	0.0370	0.0326	0.0260	0.0172	0.0066
N.A.C.A. hood [1]	.0434	.0440	.0438	.0429	.0408	.0372	.0325	.0258	.0170	.0060
Variable ring −8° [1]	.0430	.0430	.0425	.0419	.0400	.0370	.0326	.0260	.0170	.0058
N.A.C.A. cowled nacelle	.0420	.0421	.0420	.0415	.0401	.0380	.0331	.0265	.0175	.0070
Nacelle position A-2-B										
Smooth body	0.0446	0.0444	0.0438	0.0425	0.0403	0.0372	0.0324	0.0255	0.0164	--------
Exposed cylinders [1]	.0442	.0442	.0439	.0429	.0408	.0377	.0332	.0269	.0180	0.0069
N.A.C.A. hood [1]	.0452	.0450	.0442	.0435	.0416	.0382	.0335	.0269	.0180	.0065
Variable ring −8° [1]	.0446	.0445	.0441	.0429	.0410	.0380	.0338	.0277	.0196	.0093
N.A.C.A. cowled nacelle	.0443	.0442	.0437	.0424	.0401	.0367	.0320	.0256	.0170	.0059
Nacelle position C-3-B										
Smooth body	0.0411	0.0417	0.0417	0.0405	0.0376	0.0332	0.0271	0.0189	0.0082	--------

[1] Small nacelle.

TABLE VI

PROPULSIVE EFFICIENCY

$$\eta = \frac{(T - \Delta D)V}{P}$$

Propeller No. 4412—4 feet. Set 17° at 0.75 R. Angle of attack = −5°

Type of nacelle	$\frac{V}{nD}$									
	0.1	0.2	0.3	0.4	0.5	0.6	0.7	0.8	0.9	1.0
Nacelle position B, with side brackets										
Smooth body	0.204	0.383	0.530	0.640	0.709	0.760	0.750	0.607	---------	---------
Exposed cylinders [1]	.193	.366	.518	.640	.732	.790	.814	.754	0.348	---------
N.A.C.A. hood [1]	.193	.362	.505	.618	.698	.750	.751	.617	---------	---------
N.A.C.A. cowled nacelle	.192	.363	.508	.630	.717	.772	.770	.644	---------	---------
Nacelle position B, without side brackets										
Exposed cylinders [1]	0.208	0.395	0.555	0.688	0.784	0.841	0.855	0.786	0.472	---------
N.A.C.A. hood [1]	.210	.396	.556	.684	.775	.822	.828	.734	.286	---------
Variable ring −8° [1]	.205	.389	.549	.675	.767	.823	.831	.771	.391	---------
Nacelle position C										
Smooth body	0.211	0.397	0.553	0.680	0.761	0.798	0.786	0.628	---------	---------
Nacelle position B-1-A, faired into wing										
Exposed cylinders [1]	0.206	0.392	0.555	0.692	0.790	0.846	0.860	0.795	0.435	---------
N.A.C.A. hood [1]	.197	.380	.538	.667	.764	.819	.824	.742	.417	---------
N.A.C.A. cowled nacelle	.200	.381	.538	.665	.758	.811	.821	.765	.460	---------
Variable ring −8° [1]	.195	.375	.532	.663	.763	.828	.850	.815	.549	---------
Nacelle position C-3-A										
Smooth body	0.204	0.388	0.538	0.644	0.742	0.788	0.774	0.625	---------	---------
Nacelle position A-1-B, faired into wing										
Exposed cylinders [1]	0.202	0.383	0.538	0.670	0.770	0.829	0.841	0.810	0.646	---------
N.A.C.A. hood [1]	.199	.375	.529	.656	.744	.781	.762	.692	.327	---------
Variable ring −8° [1]	.203	.383	.535	.655	.743	.784	.782	.687	.250	---------
N.A.C.A. cowled nacelle	.206	.387	.534	.650	.730	.780	.775	.678	.274	---------
Nacelle position A-2-B										
Smooth body	0.201	0.382	0.536	0.662	0.749	0.787	0.772	0.622	---------	---------
Exposed cylinders [1]	.203	.384	.540	.667	.761	.817	.833	.770	.397	---------
N.A.C.A. hood [1]	.196	.371	.521	.642	.730	.777	.772	.660	.100	---------
Variable ring −8° [1]	.201	.383	.542	.568	.761	.811	.808	.736	.282	---------
N.A.C.A. cowled nacelle	.197	.372	.524	.645	.731	.777	.769	.620	---------	---------
Nacelle position C-3-B										
Smooth body	0.206	0.387	0.538	0.653	0.736	0.778	0.775	0.634	---------	---------

[1] Small nacelle.

TABLE VI—Continued

PROPULSIVE EFFICIENCY

$$\eta=\frac{(T-\Delta D)V}{P}$$

Propeller No. 4412—4 feet. Set 17° at 0.75 R. Angle of attack=0°

Type of nacelle	$\frac{V}{nD}$									
	0.1	0.2	0.3	0.4	0.5	0.6	0.7	0.8	0.9	1.0
Nacelle position B, with side brackets										
Smooth body	0.199	0.373	0.528	0.640	0.717	0.756	0.745	0.607	--------	--------
Exposed cylinders [1]	.192	.366	.516	.639	.730	.790	.815	.760	0.350	--------
N.A.C.A. hood [1]	.193	.363	.510	.622	.706	.746	.753	.636	--------	--------
N.A.C.A. cowled nacelle	.189	.358	.502	.621	.709	.756	.750	.603	--------	--------
Nacelle position B, without side brackets										
Exposed cylinders [1]	0.202	0.385	0.541	0.667	0.758	0.812	0.834	0.780	0.463	--------
N.A.C.A hood [1]	.208	.393	.550	.676	.762	.811	.813	.721	.238	--------
Variable ring −8° [1]	.208	.393	.552	.680	.768	.816	.823	.734	.319	--------
Nacelle position C										
Smooth body	0.206	0.387	0.540	0.661	0.748	0.795	0.785	0.583	--------	--------
Nacelle position B-1-A, faired into wing										
Exposed cylinders [1]	0.205	0.392	0.547	0.682	0.775	0.834	0.859	0.799	0.439	--------
N.A.C.A. hood [1]	.198	.377	.529	.647	.738	.790	.800	.716	.286	--------
N.A.C.A. cowled nacelle	.197	.373	.523	.643	.724	.775	.785	.706	.252	--------
Variable ring −8° [1]	.195	.372	.524	.650	.738	.780	.777	.667	.146	--------
Nacelle position C-3-A										
Smooth body	0.200	0.377	0.530	0.652	0.736	0.775	0.761	0.596	--------	--------
Nacelle position A-1-B, faired into wing										
Exposed cylinders [1]	0.203	0.386	0.545	0.671	0.770	0.828	0.840	0.790	0.540	--------
N.A.C.A. hood [1]	.200	.381	.538	.665	.748	.783	.770	.694	.317	--------
Variable ring −8° [1]	.202	.382	.540	.662	.745	.795	.795	.740	.440	--------
N.A.C.A. cowled nacelle	.207	.391	.544	.660	.752	.787	.790	.728	.425	--------
Nacelle position A-2-B										
Smooth body	0.201	0.382	0.535	0.662	0.749	0.788	0.774	0.631	--------	--------
Exposed cylinders [1]	.203	.385	.541	.668	.764	.819	.833	.778	0.486	--------
N.A.C.A. hood [1]	.194	.368	.515	.640	.727	.773	.777	.686	.294	--------
Variable ring −8° [1]	.201	.381	.538	.665	.757	.815	.827	.773	.464	--------
N.A.C.A. cowled nacelle	.197	.372	.522	.642	.727	.771	.773	.680	.245	--------
Nacelle position C-3-B										
Smooth body	0.210	0.389	0.536	0.652	0.724	0.772	0.763	0.600	--------	--------

[1] Small nacelle.

TABLE VI—Continued

PROPULSIVE EFFICIENCY

$$\eta=\frac{(T-\Delta D)V}{P}$$

Propeller No. 4412—4 feet. Set 17° at 0.75 R. Angle of attack=5°

Type of nacelle	$\frac{V}{nD}$									
	0.1	0.2	0.3	0.4	0.5	0.6	0.7	0.8	0.9	1.0
Nacelle position B, with side brackets										
Smooth body	0.193	0.365	0.509	0.616	0.686	0.728	0.736	0.610	----------	----------
Exposed cylinders [1]	.187	.354	.498	.617	.700	.748	.764	.730	0.322	----------
N.A.C.A. hood [1]	.191	.357	.498	.607	.683	.736	.753	.678	.170	----------
N.A.C.A. cowled nacelle	.185	.348	.487	.596	.677	.724	.712	.562	----------	----------
Nacelle position B, without side brackets										
Exposed cylinders [1]	0.202	0.383	0.533	0.652	0.740	0.698	0.808	0.745	0.475	----------
N.A.C.A. hood [1]	.203	.383	.537	.657	.735	.781	.780	.695	.241	----------
Variable ring −8° [1]	.202	.382	.534	.654	.736	.782	.791	.736	.380	----------
Nacelle position C										
Smooth body	0.201	0.381	0.527	0.638	0.713	0.741	0.723	0.549	----------	----------
Nacelle position B-1-A, faired into wing										
Exposed cylinders [1]	0.193	0.370	0.524	0.641	0.730	0.785	0.785	0.720	0.410	----------
N.A.C.A. hood [1]	.196	.371	.519	.640	.719	.757	.743	.618	.106	----------
N.A.C.A. cowled nacelle	.197	.370	.517	.630	.711	.749	.744	.628	.115	----------
Variable ring −8° [1]	.193	.366	.517	.639	.725	.775	.784	.719	.360	----------
Nacelle position C-3-A										
Smooth body	0.196	0.375	0.525	0.640	0.724	0.771	0.755	0.592	----------	----------
Nacelle position A-1-B, faired into wing										
Exposed cylinders [1]	0.205	0.390	0.549	0.673	0.763	0.818	0.830	0.790	0.514	----------
N.A.C.A. hood [1]	.196	.372	.523	.640	.722	.765	.758	.693	.397	----------
Variable ring −8° [1]	.204	.382	.540	.654	.736	.785	.792	.760	.610	----------
N.A.C.A. cowled nacelle	.207	.388	.542	.664	.745	.785	.790	.740	.482	----------
Nacelle position A-2-B										
Smooth body	0.196	0.372	0.523	0.645	0.732	0.772	0.768	0.706	0.402	----------
Exposed cylinders [1]	.202	.381	.533	.654	.743	.794	.818	.795	.618	----------
N.A.C.A. hood [1]	.192	.364	.515	.637	.723	.775	.780	.720	.528	----------
Variable ring −8° [1]	.199	.380	.534	.662	.756	.810	.825	.800	.621	----------
N.A.C.A. cowled nacelle	.197	.371	.515	.632	.710	.750	.753	.683	.406	----------
Nacelle position C-3-B										
Smooth body	0.207	0.381	0.524	0.638	0.716	0.774	0.760	0.650	----------	----------

[1] Small nacelle.

TABLE VI—Continued

PROPULSIVE EFFICIENCY

$$\eta=\frac{(T-\Delta D)V}{P}$$

Propeller No. 4412—4 feet. Set 17° at 0.75 R. Angle of attack=10°

Type of nacelle	$\frac{V}{nD}$									
	0.1	0.2	0.3	0.4	0.5	0.6	0.7	0.8	0.9	1.0
Nacelle position B, with side brackets										
Smooth body	0.189	0.355	0.491	0.589	0.649	0.685	0.665	0.532	----------	----------
Exposed cylinders [1]	.181	.341	.478	.589	.668	.715	.695	.599	0.111	----------
N.A.C.A. hood [1]	.186	.342	.470	.563	.627	.664	.670	.602	.210	----------
N.A.C.A. cowled nacelle	.182	.340	.475	.575	.640	.672	.650	.510	----------	----------
Nacelle position B, without side brackets										
Exposed cylinders [1]	0.199	0.373	0.518	0.635	0.716	0.761	0.770	0.724	0.491	----------
N.A.C.A. hood [1]	.198	.369	.506	.611	.680	.706	.695	.607	.199	----------
Variable ring −8° [1]	.196	.366	.506	.613	.689	.730	.734	.676	.373	----------
Nacelle position C										
Smooth body	0.198	0.365	0.502	0.602	0.663	0.694	0.663	0.483	----------	----------
Nacelle position B-1-A, faired into wing										
Exposed cylinders [1]	0.188	0.358	0.505	0.630	0.706	0.747	0.740	0.656	0.273	----------
N.A.C.A. hood [1]	.191	.356	.497	.595	.675	.720	.730	.656	.345	----------
N.A.C.A. cowled nacelle	.193	.357	.490	.592	.655	.690	.679	.563	.060	----------
Variable ring −8° [1]	.192	.355	.490	.594	.667	.710	.723	.672	.391	----------
Nacelle position C-3-A										
Smooth body	0.192	0.367	0.518	0.640	0.714	0.758	0.745	0.585	----------	----------
Nacelle position A-1-B, faired into wing										
Exposed cylinders [1]	0.208	0.392	0.542	0.657	0.730	0.760	0.747	0.675	0.445	----------
N.A.C.A. hood [1]	.197	.363	.508	.614	.690	.735	.735	.682	.503	----------
Variable ring −8° [1]	.197	.376	.526	.638	.725	.780	.810	.820	.805	0.518
N.A.C.A. cowled nacelle	.204	.385	.530	.636	.705	.729	.733	.691	.545	----------
Nacelle position A-2-B										
Smooth body	0.193	0.363	0.506	0.621	0.701	0.738	0.733	0.665	0.433	----------
Exposed cylinders [1]	.197	.369	.512	.620	.700	.738	.740	.684	.520	----------
N.A.C.A. hood [1]	.189	.356	.495	.597	.670	.710	.710	.657	.480	----------
Variable ring −8° [1]	.198	.376	.524	.644	.730	.782	.792	.760	.643	0.197
N.A.C.A. cowled nacelle	.194	.370	.506	.617	.695	.733	.727	.665	.487	----------
Nacelle position C-3-B										
Smooth body	0.207	0.385	0.530	0.640	0.720	0.766	0.765	0.678	0.245	----------

[1] Small nacelle.

TABLE VII

LIFT COEFFICIENT WITH PROPELLER OPERATING

$$C_{L_P}=\frac{L_P}{qS}$$

Propeller No 4412—4 feet. Set 17° at 0.75 R. Angle of attack=−5°

Type of nacelle	$\frac{V}{nD}$									
	0.1	0.2	0.3	0.4	0.5	0.6	0.7	0.8	0.9	1.0
Nacelle position B, with side brackets										
Smooth body				0.017	0.029	0.036	0.041	0.044	0.046	0.047
Exposed cylinders [1]				.041	.039	.034	.030	.028	.023	.020
N.A.C.A. hood [1]				.023	.022	.021	.020	.020	.019	.018
N.A.C.A. cowled nacelle				.031	.030	.030	.030	.030	.029	.029
Nacelle position B, without side brackets										
Exposed cylinders [1]				0.013	0.013	0.015	0.020	0.023	0.029	0.032
N.A.C.A. hood [1]				.059	.041	.031	.023	.020	.021	.026
Variable ring −8° [1]				.031	.023	.020	.019	.018	.019	.020
Nacelle position C										
Smooth body				0.040	0.038	0.034	0.033	0.034	0.036	0.038
Nacelle position B-1-A, faired into wing										
Exposed cylinders [1]				0.091	0.072	0.060	0.050	0.043	0.040	0.037
N.A.C.A. hood [1]				.140	.100	.075	.058	.044	.039	.037
N.A.C.A. cowled nacelle				.092	.088	.081	.078	.074	.071	.070
Variable ring −8° [1]				.058	.051	.050	.049	.050	.051	.058
Nacelle position C-3-A										
Smooth body				0.055	0.049	0.042	0.039	0.035	0.032	0.030
Nacelle position A-1-B, faired into wing										
Exposed cylinders [1]				−0.042	−0.022	−0.009	0.005	0.013	0.021	0.030
N.A.C.A. hood [1]				.010	.005	.001	−.001	−.002	−.004	−.005
Variable ring −8° [1]				−.072	−.039	−.018	−.005	.000	.000	−.003
N.A.C.A. cowled nacelle				−.081	−.065	−.061	−.040	−.032	−.025	−.020
Nacelle position A-2-B										
Smooth body				−0.024	−0.010	0.001	0.011	0.019	0.027	0.030
Exposed cylinders [1]				−.002	.000	.004	.011	.021	.039	.060
N.A.C.A. hood [1]				−.020	−.011	−.004	.000	.002	.004	.004
Variable ring −8° [1]				−.059	−.051	−.041	−.029	−.010	.009	.029
N.A.C.A. cowled nacelle				−.043	−.022	−.009	.000	.006	.008	.008
Nacelle position C-3-B										
Smooth body				−0.038	0.000	0.010	0.011	0.011	0.011	0.011

[1] Small nacelle.

TABLE VII—Continued

LIFT COEFFICIENT WITH PROPELLER OPERATING

$$C_{L_P}=\frac{L_P}{qS}$$

Propeller No. 4412—4 feet. Set 17° at 0.75 R. Angle of attack=0°

Type of nacelle	$\frac{V}{nD}$									
	0.1	0.2	0.3	0.4	0.5	0.6	0.7	0.8	0.9	1.0
Nacelle position B, with side brackets										
Smooth body	----------	----------	----------	0.353	0.350	0.344	0.340	0.334	0.330	0.324
Exposed cylinders [1]	----------	----------	----------	.362	.350	.339	.328	.316	.304	.292
N.A.C.A. hood [1]	----------	----------	----------	.386	.350	.330	.321	.316	.312	.311
N.A.C.A. cowled nacelle	----------	----------	----------	.339	.337	.333	.330	.328	.324	.321
Nacelle position B, without side brackets										
Exposed cylinders [1]	----------	----------	----------	0.364	0.331	0.311	0.303	0.303	0.302	0.301
N.A.C.A. hood [1]	----------	----------	----------	.360	.333	.318	.308	.301	300	.306
Variable ring −8° [1]	----------	----------	----------	.339	.329	.320	.313	.311	.310	.310
Nacelle position C										
Smooth body	----------	----------	----------	0.390	0.362	0.342	.0329	0.319	0.311	0.308
Nacelle position B-1-A, faired into wing										
Exposed cylinders [1]	----------	----------	----------	0.450	0.397	0.364	0.340	0.323	0.320	0.313
N.A.C.A. hood [1]	----------	----------	----------	.430	.387	.361	.346	.341	.339	.338
N.A.C.A. cowled nacelle	----------	----------	----------	.475	.416	.375	.358	.360	.365	.370
Variable ring −8° [1]	----------	----------	----------	.452	.400	.370	.352	.345	.345	.350
Nacelle position C-3-A										
Smooth body	----------	----------	----------	0.352	0.340	0.330	0.325	0.321	0.320	0.320
Nacelle position A-1-B, faired into wing										
Exposed cylinders [1]	----------	----------	----------	0.291	0.282	0.279	0.275	0.272	0.270	0.270
N.A.C.A. hood [1]	----------	----------	----------	.301	.290	.281	.275	.271	.270	.267
Variable ring −8° [1]	----------	----------	----------	.278	.272	.270	.268	.267	.264	.263
N.A.C.A. cowled nacelle	----------	----------	----------	.243	.245	.249	.250	.250	.249	.248
Nacelle position A-2-B										
Smooth body	----------	----------	----------	0.276	0.283	0.290	0.296	0.298	0.299	0.298
Exposed clylinders [1]	----------	----------	----------	.302	.303	.303	.304	.306	.309	.311
N.A.C.A. hood [1]	----------	----------	----------	.267	.280	.290	.299	.302	.304	.305
Variable ring −8° [1]	----------	----------	----------	.249	.261	.270	.276	.280	.282	.282
N.A.C.A. cowled nacelle	----------	----------	----------	.273	.279	.281	.285	.290	.292	.298
Nacelle position C-3-B										
Smooth body	----------	----------	----------	0.320	0.320	0.320	0.320	0.320	0.320	0.320

[1] Small nacelle.

TABLE VII—Continued

LIFT COEFFICIENT WITH PROPELLER OPERATING

$$C_{L_P}=\frac{L_P}{qS}$$

Propeller No. 4412—4 feet. Set 17° at 0.75 R. Angle of attack=5°

Type of nacelle	$\frac{V}{nD}$									
	0.1	0.2	0.3	0.4	0.5	0.6	0.7	0.8	0.9	1.0
Nacelle position B, with side brackets										
Smooth body				0.715	0.682	0.659	0.643	0.634	0.631	0.630
Exposed cylinders [1]				.680	.647	.621	.601	.588	.573	.562
N.A.C.A. hood [1]				.721	.680	.650	.630	.616	.609	.602
N.A.C.A. cowled nacelle				.721	.679	.650	.631	.620	.618	.618
Nacelle position B, without side brackets										
Exposed cylinders [1]				0.710	0.657	0.617	0.594	0.581	0.572	0.567
N.A.C.A. hood [1]				.686	.653	.630	.611	.599	.590	.582
Variable ring −8° [1]				.699	.652	.622	.600	.583	.574	.570
Nacelle position C										
Smooth body				0.732	0.677	0.642	0.625	0.616	0.614	0.612
Nacelle position B-1-A, faired into wing										
Exposed cylinders [1]				0.795	0.724	0.675	0.643	0.625	0.616	0.609
N.A.C.A. hood [1]				.764	.704	.666	.642	.630	.628	.627
N.A.C.A. cowled nacelle				.813	.733	.692	.670	.660	.655	.652
Variable ring −8° [1]				.825	.721	.678	.658	.650	.643	.638
Nacelle position C-3-A										
Smooth body				0.640	0.627	0.617	0.610	0.606	0.602	0.601
Nacelle position A-1-B, faired into wing										
Exposed cylinders [1]				0.605	0.588	0.578	0.570	0.562	0.558	0.550
N.A.C.A. hood [1]				.620	.595	.578	.563	.553	.547	.541
Variable ring −8° [1]				.584	.572	.565	.560	.559	.556	.553
N.A.C.A. cowled nacelle				.563	.557	.550	.542	.538	.532	.528
Nacelle position A-2-B										
Smooth body				0.594	0.599	0.601	0.604	0.609	0.610	0.613
Exposed cylinders [1]				.600	.603	.609	.611	.613	.619	.621
N.A.C.A. hood [1]				.589	.590	.592	.595	.598	.600	.601
Variable ring −8° [1]				.601	.600	.595	.590	.589	.584	.581
N.A.C.A. cowled nacelle				.619	.601	.592	.590	.592	.600	.609
Nacelle position C-3-B										
Smooth body				0.600	0.600	0.599	0.598	0.597	0.595	0.592

[1] Small nacelle.

TABLE VII—Continued

LIFT COEFFICIENT WITH PROPELLER OPERATING

$$C_{L_P}=\frac{L_P}{qS}$$

Propeller No. 4412—4 feet. Set 17° at 0.75 R. Angle of attack=10°

Type of nacelle	$\frac{V}{nD}$									
	0.1	0.2	0.3	0.4	0.5	0.6	0.7	0.8	0.9	1.0
Nacelle position B, with side brackets										
Smooth body				1.080	1.026	0.989	0.963	0.946	0.937	0.931
Exposed cylinders [1]				1.101	.991	.930	.887	.859	.839	.828
N.A.C.A. hood [1]				1.072	1.003	.971	.949	.931	.919	.910
N.A.C.A. cowled nacelle				1.078	1.006	.976	.956	.940	.929	.919
Nacelle position B, without side brackets										
Exposed cylinders [1]				1.060	0.988	0.934	0.898	0.871	0.853	0.840
N.A.C.A. hood [1]				1.042	.990	.952	.927	.910	.900	.893
Variable ring −8° [1]				1.041	.997	.960	.933	.913	.900	.892
Nacelle position C										
Smooth body				1.080	1.021	0.981	0.957	0.940	0.930	0.928
Nacelle position B-1-A, faired into wing										
Exposed cylinders [1]				1.121	1.041	0.981	0.941	0.915	0.895	0.880
N.A.C.A. hood [1]				1.111	1.042	.996	.966	.946	.933	.926
N.A.C.A. cowled nacelle				1.140	1.050	.989	.961	.955	.952	.950
Variable ring −8° [1]				1.135	1.040	.992	.970	.951	.939	.926
Nacelle position C-3-A										
Smooth body				0.945	0.930	0.919	0.910	0.908	0.905	0.908
Nacelle position A-1-B, faired into wing										
Exposed cylinders [1]				0.930	0.908	0.890	0.875	0.860	0.848	0.835
N.A.C.A. hood [1]				.971	.930	.900	.881	.870	.861	.855
Variable ring −8° [1]				.968	.922	.893	.872	.861	.853	.850
N.A.C.A. cowled nacelle				.914	.890	.873	.860	.850	.838	.833
Nacelle position A-2-B										
Smooth body				0.950	0.941	0.934	0.930	0.922	0.918	0.911
Exposed cylinders [1]				.969	.944	.929	.918	.911	.910	.910
N.A.C.A. hood [1]				.963	.942	.929	.921	.915	.910	.909
Variable ring −8° [1]				.896	.893	.891	.889	.888	.883	.880
N.A.C.A. cowled nacelle				.936	.930	.924	.921	.920	.919	.919
Nacelle position C-3-B										
Smooth body				0.930	0.920	0.910	0.900	0.890	0.881	0.872

[1] Small nacelle.

TABLE VIII

MOMENT COEFFICIENT WITH PROPELLER OPERATING

$$C_{m_P}=\frac{M_P}{qSc}$$

Propeller No. 4412—4 feet. Set 17° at 0.75 R. Angle of attack=−5°

Type of nacelle	$\frac{V}{nD}$									
	0.1	0.2	0.3	0.4	0.5	0.6	0.7	0.8	0.9	1.0
Nacelle position B, with side brackets										
Smooth body				−0.123	−0.100	−0.086	−0.080	−0.076	−0.075	−0.075
Exposed cylinders [1]				−.098	−.084	−.073	−.065	−.060	−.057	−.055
N.A.C.A. hood [1]				−.104	−.091	−.082	−.075	−.071	−.068	−.066
N.A.C.A. cowled nacelle				−.110	−.100	−.092	−.088	−.085	−.084	−.084
Nacelle position B, without side brackets										
Exposed cylinders [1]				−0.104	−0.093	−0.083	−0.074	−0.069	−0.065	−0.065
N.A.C.A. hood [1]				−.104	−.093	−.086	−.081	−.078	−.077	−.076
Variable ring −8° [1]				−.095	−.088	−.083	−.078	−.075	−.072	−.071
Nacelle position C										
Smooth body				−0.105	−0.089	−0.079	−0.075	−0.071	−0.069	−0.067
Nacelle position B-1-A, faired into wing										
Exposed cylinders [1]				−0.162	−0.118	−0.092	−0.077	−0.067	−0.060	−0.054
N.A.C.A. hood [1]				−.142	−.114	−.092	−.076	−.066	−.060	−.056
N.A.C.A. cowled nacelle				−.187	−.130	−.095	−.079	−.069	−.063	−.060
Variable ring −8° [1]				−.185	−.127	−.096	−.079	−.068	−.062	−.061
Nacelle position C-3-A										
Smooth body				−0.340	−0.202	−0.135	−0.100	−0.074	−0.056	−0.042
Nacelle position A-1-B, faired into wing										
Exposed cylinders [1]				−0.026	−0.043	−0.055	−0.063	−0.067	−0.071	−0.072
N.A.C.A. hood [1]				−.024	−.040	−.052	−.059	−.063	−.065	−.066
Variable ring −8° [1]				−.015	−.039	−.055	−.065	−.073	−.079	−.083
N.A.C.A. cowled nacelle				−.027	−.042	−.054	−.062	−.069	−.074	−.077
Nacelle position A-2-B										
Smooth body				0.031	−0.010	−0.036	−0.056	−0.070	−0.080	−0.085
Exposed cylinders [1]				.050	−.007	−.040	−.061	−.075	−.085	−.092
N.A.C.A. hood [1]				.045	−.012	−.043	−.062	−.075	−.083	−.088
Variable ring −8° [1]				.060	.010	−.029	−.056	−.072	−.082	−.085
N.A.C.A. cowled nacelle				.044	−.001	−.031	−.052	−.067	−.077	−.084
Nacelle position C-3-B										
Smooth body				0.144	0.034	−0.020	−0.054	−0.076	−0.090	−0.100

[1] Small nacelle.

TABLE VIII—Continued

MOMENT COEFFICIENT WITH PROPELLER OPERATING

$$C_{m_P}=\frac{M_P}{qSc}$$

Propeller No. 4412—4 feet. Set 17° at 0.75 R. Angle of attack=0°

Type of nacelle	$\frac{V}{nD}$									
	0.1	0.2	0.3	0.4	0.5	0.6	0.7	0.8	0.9	1.0
Nacelle position B, with side brackets										
Smooth body				−0.096	−0.078	−0.066	−0.059	−0.055	−0.055	−0.055
Exposed cylinders [1]				−.085	−.072	−.062	−.055	−.052	−.050	−.049
N.A.C.A. hood [1]				−.084	−.065	−.054	−.047	−.045	−.044	−.044
N.A.C.A. cowled nacelle				−.079	−.071	−.066	−.063	−.060	−.059	−.058
Nacelle position B, without side brackets										
Exposed cylinders [1]				−0.077	−0.072	−0.067	−0.063	−0.060	−0.058	−0.056
N.A.C.A. hood [1]				−.083	−.072	−.065	−.059	−.056	−.055	−.054
Variable ring −8° [1]				−.075	−.070	−.065	−.062	−.060	−.059	−.058
Nacelle position C										
Smooth body				−0.081	−0.064	−0.054	−0.050	−0.049	−0.048	−0.046
Nacelle position B-1-A, faired into wing										
Exposed cylinders [1]				−0.134	−0.100	−0.076	−0.060	−0.051	−0.047	−0.044
N.A.C.A. hood [1]				−.157	−.107	−.079	−.062	−.052	−.046	−.041
N.A.C.A. cowled nacelle				−.145	−.104	−.075	−.058	−.048	−.044	−.040
Variable ring −8° [1]				−.145	−.105	−.078	−.062	−.050	−.042	−.037
Nacelle position C-3-A										
Smooth body				−0.322	−0.180	−0.118	−0.083	−0.058	−0.043	−0.031
Nacelle position A-1-B, faired into wing										
Exposed cylinders [1]				−0.008	−0.033	−0.050	−0.060	−0.067	−0.070	−0.072
N.A.C.A. hood [1]				.003	−.030	−.051	−.066	−.077	−.085	−.092
Variable ring −8° [1]				.009	−.024	−.045	−.059	−.067	−.072	−.074
N.A.C.A. cowled nacelle				−.022	−.035	−.045	−.053	−.060	−.065	−.067
Nacelle position A-2-B										
Smooth body				0.052	0.002	−0.028	−0.050	−0.065	−0.075	−0.078
Exposed cylinders [1]				.068	.009	−.029	−.050	−.065	−.074	−.078
N.A.C.A. hood [1]				.061	.000	−.030	−.050	−.063	−.073	−.079
Variable ring −8° [1]				.063	.008	−.023	−.045	−.061	−.072	−.079
N.A.C.A. cowled nacelle				.065	.010	−.021	−.045	−.060	−.071	−.079
Nacelle position C-3-B										
Smooth body				0.147	0.040	−0.012	−0.044	−0.066	−0.082	−0.094

[1] Small nacelle.

TABLE VIII—Continued

MOMENT COEFFICIENT WITH PROPELLER OPERATING

$$C_{m_P}=\frac{M_P}{qSc}$$

Propeller No. 4412—4 feet. Set 17° at 0.75 R. Angle of attack=5°

Type of nacelle	$\frac{V}{nD}$									
	0.1	0.2	0.3	0.4	0.5	0.6	0.7	0.8	0.9	1.0
Nacelle position B, with side brackets										
Smooth body				−0.074	−0.057	−0.050	−0.045	−0.040	−0.039	−0.039
Exposed cylinders [1]				−.064	−.054	−.046	−.042	−.039	−.037	−.036
N.A.C.A. hood [1]				−.058	−.044	−.035	−.030	−.026	−.023	−.023
N.A.C.A. cowled nacelle				−.068	−.061	−.056	−.052	−.050	−.048	−.047
Nacelle position B, without side brackets										
Exposed cylinders [1]				−0.060	−0.055	−0.051	−0.048	−0.045	−0.042	−0.040
N.A.C.A. hood [1]				−.059	−.054	−.050	−.046	−.044	−.043	−.041
Variable ring −8° [1]				−.059	−.055	−.051	−.048	−.046	−.045	−.044
Nacelle position C										
Smooth body				−0.056	−0.045	−0.036	−0.030	−0.027	−0.026	−0.025
Nacelle position B-1-A, faired into wing										
Exposed cylinders [1]				−0.117	−0.092	−0.072	−0.058	−0.048	−0.041	−0.036
N.A.C.A. hood [1]				−.142	−.083	−.058	−.047	−.039	−.034	−.030
N.A.C.A. cowled nacelle				−.115	−.080	−.056	−.042	−.035	−.031	−.027
Variable ring −8° [1]				−.115	−.082	−.058	−.043	−.032	−.026	−.023
Nacelle position C-3-A										
Smooth body				−0.295	−0.172	−0.105	−0.066	−0.043	−0.030	−0.021
Nacelle position A-1-B, faired into wing										
Exposed cylinders [1]				0.026	−0.010	−0.033	−0.047	−0.055	−0.060	−0.061
N.A.C.A. hood [1]				.014	−.022	−.045	−.059	−.061	−.060	−.060
Variable ring −8° [1]				.025	−.009	−.033	−.049	−.058	−.064	−.066
N.A.C.A. cowled nacelle				.004	−.022	−.038	−.048	−.055	−.059	−.061
Nacelle position A-2-B										
Smooth body				0.075	0.017	−0.019	−0.039	−0.052	−0.061	−0.066
Exposed cylinders [1]				.056	.005	−.028	−.046	−.059	−.068	−.074
N.A.C.A. hood [1]				.066	.013	−.023	−.043	−.054	−.063	−.069
Variable ring −8° [1]				.060	.016	−.018	−.045	−.064	−.075	−.081
N.A.C.A. cowled nacelle				.071	.020	−.012	−.035	−.050	−.061	−.069
Nacelle position C-3-B										
Smooth body				0.159	0.057	0.005	−0.028	−0.050	−0.064	−0.075

[1] Small nacelle.

TABLE VIII—Continued

MOMENT COEFFICIENT WITH PROPELLER OPERATING

$$C_{m_P}=\frac{M_P}{qSc}$$

Propeller No. 4412—4 feet. Set 17° at 0.75 R. Angle of attack=10°

Type of nacelle	$\frac{V}{nD}$									
	0.1	0.2	0.3	0.4	0.5	0.6	0.7	0.8	0.9	1.0
Nacelle position B, with side brackets										
Smooth body				−0.053	−0.042	−0.035	−0.031	−0.028	−0.028	−0.028
Exposed cylinders [1]				−.041	−.038	−.036	−.035	−.035	−.035	−.035
N.A.C.A. hood [1]				−.033	−.028	−.025	−.023	−.021	−.020	−.020
N.A.C.A. cowled nacelle				−.045	−.042	−.040	−.038	−.036	−.035	−.035
Nacelle position B, without side brackets										
Exposed cylinders [1]				−0.065	−0.054	−0.046	−0.042	−0.039	−0.038	−0.038
N.A.C.A. hood [1]				−.030	−.030	−.030	−.030	−.030	−.030	−.030
Variable ring −8°				−.030	−.030	−.030	−.030	−.030	−.030	−.030
Nacelle position C										
Smooth body				−0.020	−0.015	−0.012	−0.010	−0.008	−0.007	−0.007
Nacelle position B-1-A, faired into wing										
Exposed cylinders [1]				−0.143	−0.100	−0.069	−0.053	−0.045	−0.040	−0.038
N.A.C.A. hood [1]				−.112	−.068	−.048	−.035	−.027	−.023	−.021
N.A.C.A. cowled nacelle				−.104	−.078	−.058	−.042	−.033	−.027	−.024
Variable ring −8° [1]				−.107	−.073	−.050	−.035	−.025	−.019	−.017
Nacelle position C-3-A										
Smooth body				−0.285	−0.152	−0.096	−0.063	−0.041	−0.026	−0.016
Nacelle position A-1-B, faired into wing										
Exposed cylinders [1]				0.000	−0.015	−0.031	−0.043	−0.051	−0.056	−0.060
N.A.C.A. hood [1]				.020	−.010	−.031	−.043	−.050	−.055	−.057
Variable ring −8° [1]				.026	−.005	−.026	−.039	−.047	−.052	−.056
N.A.C.A. cowled nacelle				.025	−.005	−.027	−.042	−.050	−.055	−.058
Nacelle position A-2-B										
Smooth body				0.093	0.019	−0.017	−0.027	−0.049	−0.057	−0.062
Exposed cylinders [1]				.057	.010	−.023	−.044	−.058	−.066	−.071
N.A.C.A. hood [1]				.088	.018	−.020	−.039	−.049	−.056	−.062
Variable ring −8° [1]				.082	.032	−.013	−.040	−.054	−.061	−.066
N.A.C.A. cowled nacelle				.091	.024	−.020	−.040	−.049	−.054	−.057
Nacelle position C-3-B										
Smooth body				0.185	0.066	0.009	−0.024	−0.045	−0.061	−0.072

[1] Small nacelle.

TABLE IX

RELATIVE MERITS OF VARIOUS COWLINGS FOR DIFFERENT NACELLE LOCATIONS

HIGH AND CRUISING SPEED CONDITION

Propeller No. 4412—4 feet. Set. 17° at 0.75 R. $\frac{V}{nD}=0.65$ $C_L=0.347$

Nacelle location	B	B [2]	C	B-1-A [3]	C-3-A	A-1-B [3]	A-2-B	C-3-B
Propulsive efficiency (η)								
Smooth body	0.760	----------	0.793	----------	0.778	----------	0.788	0.775
Exposed cylinders [1]	.805	0.832	----------	0.853	----------	0.840	.829	--------
Variable ring −8° [1]	----------	.823	----------	.783	----------	.800	.829	--------
N.A.C.A. hood [1]	.758	.816	----------	.803	----------	.782	.783	--------
N.A.C.A. cowled nacelle	.760	----------	----------	.788	----------	.793	.773	--------
Nacelle drag efficiency factor (N.D.F.)								
Smooth body	0.037	----------	0.070	----------	0.141	----------	0.128	0.143
Exposed cylinders [1]	.185	0.262	----------	0.318	----------	0.283	.335	--------
Variable ring −8° [1]	----------	.177	----------	.211	----------	.242	.259	--------
N.A.C.A. hood [1]	.122	.170	----------	.195	----------	.180	.227	--------
N.A.C.A. cowled nacelle	.046	----------	----------	.125	----------	.151	.135	--------
Net efficiency (η−N.D.F)								
Smooth body	0.723	----------	0.723	----------	0.637	----------	0.660	0.632
Exposed cylinders [1]	.620	0.570	----------	0.535	----------	0.557	.494	--------
Variable ring −8° [1]	----------	.646	----------	.572	----------	.558	.570	--------
N.A.C.A. hood [1]	.636	.646	----------	.608	----------	.602	.556	--------
N.A.C.A. cowled nacelle	.714	----------	----------	.663	----------	.642	.638	--------

[1] Small nacelle.
[2] Side brackets removed.
[3] Nacelle faired into wing.

TABLE X

RELATIVE MERITS OF VARIOUS COWLINGS FOR DIFFERENT NACELLE LOCATIONS

CLIMBING CONDITION

Propeller No. 4412—4 feet. Set 17° at 0.75 R. $\frac{V}{nD}=0.42$. $C_L=0.635$

Nacelle location	B	B [2]	C	B-1-A [3]	C-3-A	A-1-B [3]	A-2-B	C-3-B
Propulsive efficiency at climbing speed								
Smooth body	0.640	----------	0.650	----------	0.665	----------	0.662	0.652
Exposed cylinder [1]	.638	0.672	----------	0.675	----------	0.692	.670	--------
Variable ring −8° [1]	----------	.679	----------	.665	----------	.670	.680	--------
N.A.C.A. hood [1]	.627	.678	----------	.662	----------	.658	.652	--------
N.A.C.A. cowled nacelle	.618	----------	----------	.658	----------	.670	.647	--------
Nacelle drag efficiency factor (N.D.F.)								
Smooth body	−0.016	----------	−0.014	----------	0.030	----------	0.027	0.031
Exposed cylinders [1]	.021	0.026	----------	0.035	----------	0.039	.065	--------
Variable ring −8° [1]	----------	.021	----------	.013	----------	.044	.051	--------
N.A.C.A. hood [1]	.000	.018	----------	.020	----------	.024	.049	--------
N.A.C.A. cowled nacelle	−.013	----------	----------	−.010	----------	.027	.019	--------
Net efficiency (η−N.D.F.)								
Smooth body	0.656	----------	0.674	----------	0.635	----------	0.635	0.621
Exposed cylinders [1]	.617	0.646	----------	0.640	----------	0.653	.605	--------
Variable ring −8° [1]	----------	.658	----------	.652	----------	.626	.629	--------
N.A.C.A. hood [1]	.627	.660	----------	.642	----------	.634	.603	--------
N.A.C.A. cowled nacelle	.631	----------	----------	.668	----------	.643	.628	--------

[1] Small nacelle.
[2] Side brackets removed.
[3] Nacelle faired into wing.