REPORT No. 467

THE EXPERIMENTAL DETERMINATION OF THE MOMENTS OF INERTIA OF AIRPLANES

By Hartley A. Soulé and Marvel P. Miller

SUMMARY

The application of the pendulum method to the experimental determination of the moments of inertia of airplanes is discussed in this report. Particular reference is made to the effects of the air, in which the airplane is immersed, on the swinging tests and to the procedure by which these effects are taken into account.

Consideration of the effects of the ambient air has shown that the virtual moment of inertia of the airplane about any given axis of oscillation must be regarded as made up of three distinct parts; namely, that of the structure, that of the air entrapped within the structure, and that of the apparent additional mass of external air influenced by the airplane's motion. As the true moment of inertia consists only of the moments of inertia of the structure and the entrapped air, the apparent additional moment of inertia due to the influence of the external air is determined and deducted from the virtual moment of inertia. The apparent additional moment of inertia is obtained by computations utilizing the results of experiments made to determine the additional-mass effect for plates of various aspect ratios.

The procedure described in this report has been used for some time, and the data on several airplanes for which the moments of inertia have been found are included. The precision is believed to be within limits of ± 2.5 percent, ± 1.3 percent, and ± 0.8 percent for the X, Y, and Z axes, respectively.

INTRODUCTION

The necessity for precise values of moments of inertia of airplanes has arisen, particularly in connection with the study of spinning. Because of the demands of this problem, the National Advisory Committee for Aeronautics has developed apparatus and procedure for adapting for airplanes the familiar pendulum method of determining the moments of inertia of small dense bodies. Two major difficulties were encountered in the application of this method to the determination of the moments of inertia of airplanes. The first concerned the development of a system of suspension whereby the suspended body could be made to oscillate solely about a single well-defined axis. Essential features of the apparatus eventually found to be suitable and data obtained by swinging tests with this apparatus have been previously reported in references 1 and 2. The second difficulty concerned the effect of the medium in which the experiments were performed, an effect which was large because of the low mass density of the airplane and hard to determine because of its irregular shape.

The purpose of the present paper is to give a complete discussion of the determination of the moments of inertia of airplanes by the pendulum method, with particular reference to the effects of the ambient air on the moments of inertia, and the procedure by which these effects are taken into account. A description of the apparatus and test procedure used by the N.A.C.A. and the data for several airplanes for which the moments of inertia have been found are included.

During the preparation of the paper, Mr. Miller, who performed most of the experimental work, died, and the paper was completed by Mr. Soulé.

APPLICATION OF PENDULUM METHOD TO AIRPLANES

BASIC EQUATIONS

For an undamped pendulum oscillating with small amplitude in a vacuum, the equation of motion is

$$I\frac{d^2\theta}{dt^2}+b\theta=0 \tag{1}$$

where I is the moment of inertia about the axis of oscillation

b is a constant depending on the dimensions and weight of the pendulum

and θ is the angular displacement of the pendulum. From the solution of this equation, the period of oscillation is found

$$T=\frac{2\pi}{\sqrt{b/I}} \tag{2}$$

so that

$$I=\frac{T^2b}{4\pi^2} \tag{3}$$

The constant b depends upon different dimensions for different types of pendulums.

When determining the moments of inertia the bifilar torsion type of pendulum is used for the Z axis and the

compound type for the remainder of the axes (figs. 1 and 2). For the bifilar torsion pendulum, the axis of oscillation is vertical, lies midway between the two vertical filaments, and passes through the center of gravity of the system. For the compound pendulum, the axis of oscillation is horizontal and passes through

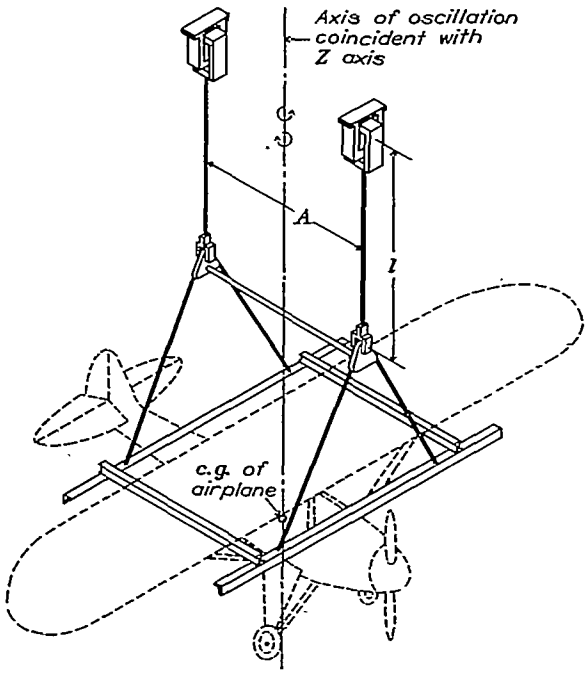

FIGURE 1.—Airplane and swinging gear arranged for the determination of the moment of inertia about the Z axis by the bifilar torsion pendulum method.

the points of support but not through the center of gravity of the pendulum.

For the bifilar torsion pendulum

$$b=\frac{WA^2}{4l}$$

and consequently

$$I=\frac{T^2WA^2}{16\pi^2 l} \tag{4}$$

where W is the weight of the pendulum
A is the distance between the vertical filaments
and l is the length of the filaments.

For the compound pendulum

$$b=WL$$

and

$$I=\frac{T^2WL}{4\pi^2} \tag{5}$$

where L is the distance between the center of gravity and the axis of oscillation. When the compound pendulum is used, the moment of inertia about an axis passing through the center of gravity is given by the equation

$$I_{c_0}=\frac{T^2WL}{4\pi^2}-ML^2 \tag{6}$$

where M is the mass of the pendulum.

DAMPING

In any practical case the motion of a pendulum will be damped by friction, whereas the theoretical case assumes no damping. Damping has the effect of increasing the period over the theoretical value. It can be shown that the effect of damping on the period can be determined by the observation of the decrease in amplitude during the first oscillation. Observations during the swinging experiments have shown that the decrease of amplitude during the first oscillation never exceeds one tenth the original amplitude. For this amount of damping the error in the moment of inertia will be less than 0.02 percent, and consequently can be neglected.

AMBIENT AIR

Equations (4) and (6), though derived for the motion of a pendulum in a vacuum, apply to the case of the pendulum oscillating in air but in this case I, W, and M refer to the virtual values of the moment of inertia, weight, and mass of the pendulum when immersed in air. The differences between the values of I, W, and M for motion in a vacuum and the case where the pendulum is immersed in air arise from three effects: the buoyancy of the structure, the air entrapped within the structure, and the *additional-mass* effect. A discussion of these effects follows.

Buoyancy and entrapped air.—The weight W in equations (4) and (6) equals the true weight of the

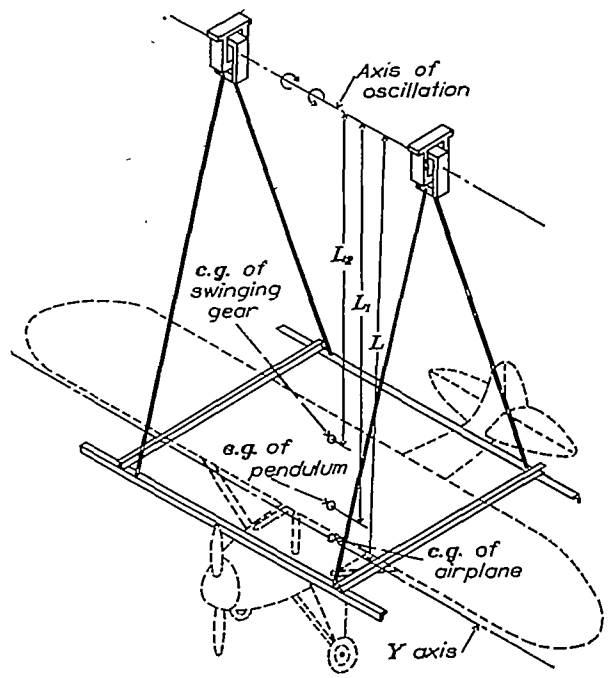

FIGURE 2.—Airplane and swinging gear arranged for the determination of the moment of inertia about the Y axis by the compound-pendulum method.

pendulum only for the case where the swinging is done in a vacuum. In the practical case where the pendulum is surrounded by a fluid medium, air, W equals the virtual weight; that is, the true weight minus the buoyancy of the structure. Weighing the pendulum

in air gives the virtual weight so that the weighing results can be applied directly for the determination of the moments of inertia about the axis of oscillation. From the virtual weight, the mass of the structure, for use in equation (6), can be found by the equation

$$M_S=\frac{W}{g}+V_S\rho \tag{7}$$

where M_S is the mass of the structure
V_S is the volume of the structure
and ρ is the density of the air.

The total volume enclosed within the external covering of the airplane, with the exception of the volume taken up by the structure, is filled with air of the same density as the surrounding air. This mass of air should be considered as part of the airplane because the major portion of it moves with the airplane, although there is some leakage through the openings in the fueselage and wings. Thus, the true mass of the pendulum

$$M=\frac{W}{g}+V_S\rho+(V-V_S)\rho$$

or

$$M=\frac{W}{g}+V\rho \tag{8}$$

Where V is the total volume of the airplane. Similarly, the true moment of inertia of the pendulum about its gravity axis is made up of two parts, a constant part I_S representing the moment of inertia of the structure, and a part I_E representing the moment of inertia of the entrapped air and varying with the density of the air; that is,

$$I=I_S+I_E$$

where

$$I_E\propto\rho \tag{9}$$

Additional mass.—When a body is put in motion in a fluid a flow about the body is immediately created. The momentum of this flow is imparted by the body, so it must be considered in determining the motion of the body. Hence, the period of a pendulum vibrating in air is to some extent dependent on the momentum imparted to the air by its motion through the air, a fact noted and discussed by Green in 1836 (reference 3). The momentum imparted to the air is proportional to the momentum of the body. As the additional momentum depends on the density of the air as well as on the size of the body and its shape relative to the direction of motion, the extent to which the period of a pendulum is affected by the surrounding air depends on the relative densities of the air and the pendulum. The late Mr. K. V. Wright (reference 4) first demonstrated that, because of the relatively low mass density of the airplane, it is necessary to consider the additional-mass effect when determining its moments of inertia by the pendulum method. It is well to note that although the effect of the surrounding medium is commonly called the additional-mass effect, the theory actually deals with the additional momentum, and it is only because the additional momentum remains proportional to the momentum of the body for a given motion that an equivalent additional mass may be used.

The effective moment of inertia of the additional mass of a pendulum about its axis of oscillation may be represented as

$$I_A+M_AL^2$$

where I_A is the additional moment of inertia about the center of gravity and M_A is the additional mass for the conditions under consideration, if the center of the additional mass is assumed to coincide with that of the pendulum. Thus, equations (4) and (6) may be expanded to the following forms

$$I_V=I_S+I_E+I_A=\frac{T^2WA^2}{16\pi^2l} \tag{10}$$

for the bifilar torsion pendulum, and

$$I_V=I_S+I_E+I_A=\frac{T^2WL}{4\pi^2}-\left(\frac{W}{g}+V\rho+M_A\right)L^2 \tag{11}$$

for the compound pendulum, where I_V is the virtual moment of inertia about the center of gravity.

VIRTUAL MOMENTS OF INERTIA

Assuming that I_E, I_A, $V\rho$, and M_A can all be evaluated, three different moments of inertia for each axis of the airplane can be determined by swinging the airplane in air. These are: the virtual moment of inertia, the true moment of inertia of the airplane consisting of the moments of inertia of the structure and the air entrapped within the airplane, and the moment of inertia of the structure.

The virtual moments of inertia are obtained directly with the bifilar pendulum. With the compound pendulum they can be obtained either by evaluating $V\rho$ and M_A or by swinging tests with two pendulum lengths. The term $V\rho$ can be readily calculated from consideration of the airplane dimensions. The method for calculating the term M_A is discussed later in connection with the general subject of determining additional mass characteristics. The method for determining I_V experimentally will be apparent from consideration of equation (11), in which the unknown terms are I_V and $(V\rho+M_A)$. Thus, by swinging with two different pendulum lengths, two simultaneous equations in two unknowns are obtained.

TRUE MOMENTS OF INERTIA

The true moments of inertia are obtained by computing I_A for each of the body axes and subtracting the

values thus found from the virtual moments of inertia. The method of computing I_A is explained in the section on additional mass. The true moments of inertia vary slightly with altitude owing to the fact that I_E is dependent on density. The term I_E is very small, however, so that its variation with altitude can be neglected.

SUPPORTING MECHANISM

Thus far the discussion has assumed a pendulum made up solely of the airplane. In general, however, the total mass of the pendulum includes the mass of additional equipment required for supporting the airplane in the desired manner. Experience in swinging airplanes has shown that it is practically impossible to reduce the weight of the additional structure to a negligible amount. The use of a strong rigid swinging gear has been found to be the best means of handling the airplane. This gear is integral in itself and is handled and swung as an independent pendulum. The moment of inertia of this gear as an independent unit is found so that it can be subtracted from the moment of inertia of the complete assembly consisting of swinging gear and airplane. The equations when the gear is used become, for the bifilar torsion pendulum,

$$I_V=\frac{T_1^2W_1A^2}{16\pi^2l}-\frac{T_2^2W_2A^2}{16\pi^2l} \tag{12}$$

and, for the compound pendulum

$$I_V=\frac{T_1^2W_1L_1}{4\pi^2}-\frac{T_2^2W_2L_2}{4\pi^2}-\left(\frac{W}{g}+V\rho+M_A\right)L^2 \tag{13}$$

where the subscripts [1] and [2] refer to the total pendulum and gear, respectively.

ELLIPSOIDS OF INERTIA

In the study of spinning it is necessary that the ellipsoid of inertia of the airplane be known for the determination of the gyroscopic couples acting on the airplane during a spin. It has been noted in practice that the principal axes of the ellipsoid nearly coincide with the body axes of the airplane. For every airplane swung, however, it is well to determine the position of the principal axes of the ellipsoid with respect to the body axes and, if there is an appreciable displacement between them, to compute the moments of inertia about the principal axes.

As the airplane is symmetrical about the XZ plane, the Y body axis coincides with the Y principal axis and it is only necessary to determine the positions of the principal axes in the XZ plane. The orientation of the principal axes in the XZ plane is found by determining the moment of inertia about a third axis in this plane at a known angle from the body axes. With these data the product of inertia, D, about the X and Z body axes can be computed by the formula,

$$D=\frac{A\cos^2\theta+C\sin^2\theta-I_{xz}}{\sin 2\theta} \tag{14}$$

where A is the moment of inertia about the X body axis

C is the moment of inertia about the Z body axis

I_{xz} is the moment of inertia about the third axis in the XZ plane

and θ is the angle between the X and the XZ axes. The angle τ between the X body axis and the X principal axis can then be found

$$\tau=\frac{1}{2}\tan^{-1}\frac{2D}{C-A} \tag{15}$$

The moments of inertia about the principal axes are given by the following equations:

$$\begin{aligned} A^{IV}&=A\cos^2\tau+C\sin^2\tau+D\sin 2\tau\\ B^{IV}&=B\\ C^{IV}&=A\sin^2\tau+C\cos^2\tau-D\sin 2\tau \end{aligned} \tag{16}$$

DETERMINATION AND DISCUSSION OF ADDITIONAL MASS CHARACTERISTICS

An analogy with the momentum imparted to the air by the motion of flat plates provides a basis for the determination of the additional mass effect of the airplane. For a flat plate (or circular cylinder) of infinite span moving with velocity V normal to its surface in air, assumed to be an incompressible and frictionless fluid, aerodynamic theory gives the momentum of the air per unit span as

$$\frac{\rho c^2\pi V}{4} \tag{17}$$

where ρ is the density of the air and c is the chord of the plate (or diameter of the cylinder).

For finite plates with end flow, the total momentum of the air for this type of motion can be expressed as

$$\frac{k\rho c^2\pi bV}{4} \tag{18}$$

where k is the coefficient of additional momentum for motion normal to the plate and b is the span of the plate. The value of k depends on the aspect ratio of the plate. For motion parallel to the plane of the plate, the additional momentum is zero.

For rotation of the plate about an axis passing through its center the additional angular momentum can be expressed by the introduction of a coefficient k'. Thus, for rotation about the mid chord, the angular momentum of the additional mass is

$$\frac{k'\rho\pi c^2b^3\Omega}{48} \tag{19}$$

where k is the coefficient for rotation about the mid chord of a plate of aspect ratio b/c, and Ω is the angular velocity.

A similar expression with a different coefficient k'' may be written for rotation about an axis parallel to the span and passing through the center of the plate.

If b and c are still regarded as the major and minor dimensions of the plate respectively, the corresponding expression for this type of motion becomes

$$\frac{k''\rho\pi c^3b^2\Omega}{48} \tag{20}$$

and the aspect ratio to which k'' applies is c/b.

When the rotation is about an axis in the plane of the plate parallel to either the chord or the span but not passing through the center of the plate, the additional angular momentum may be expressed as

$$\frac{k'\rho\pi c^2b^3\Omega}{48}+\frac{k\rho c^2\pi b\Omega l^2}{4} \tag{21}$$

or

$$\frac{k''\rho\pi c^3b^2\Omega}{48}+\frac{k\rho c^2\pi b\Omega l^2}{4} \tag{22}$$

respectively, where l is the distance from the center of the plate to the axis of rotation. It is worth noting that, in general, the first term of equation (22) can be neglected owing to the small effective aspect ratio.

The coefficients k and k' for use in equations (23) and (24) are given in figure 3. The values for k were obtained from experimental data given by Pabst (reference 5) for plates of aspect ratios up to 4. The extrapolation to aspect ratio 10 was made through the use of the approximate empirical formula for the curve

$$k=l-\frac{0.537}{A.R.} \tag{25}$$

As Pabst's experiments were performed with small plates in water, it was desirable to check at least one value of k under conditions similar to those met in the swinging tests of the airplane. For this purpose a plate 20 by 5 feet was constructed of a wooden framework covered with doped fabric. The plate was swung with its plane vertical about an axis parallel to the span and 1½ chord lengths above the center of the plate and its virtual moment of inertia about the axis of oscillation was determined. The moment of inertia

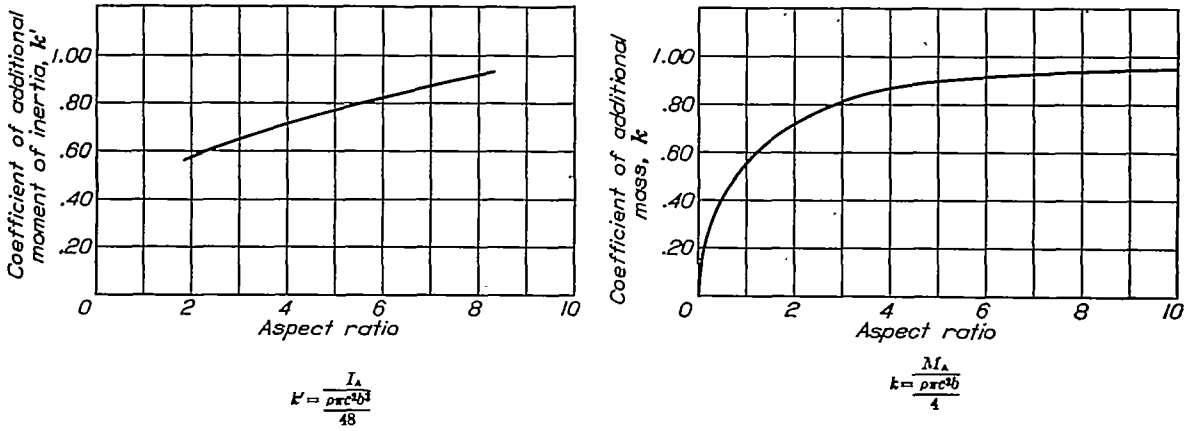

FIGURE 3.—Coefficients of additional mass and additional moments of inertia for flat plates.

It is further apparent that the above expressions, equations (21) and (22), also apply to the case in which the axis of rotation lies outside the plane of the plate. In that case, the displacement of the axis from the plate results only in an additional component of motion parallel to the plane of the plate, which imparts no additional momentum to the air. Thus it can be stated that the additional angular momentum is independent of the distance of the plane of the plate from the axis of rotation. The additional moment of inertia is found by eliminating Ω. Then, if the first term of equation (22) is neglected, additional moments of inertia become

$$\frac{k'\rho\pi c^2b^3}{48}+\frac{k\rho\pi c^2bl^2}{4} \tag{23}$$

for rotation about any axis parallel to the chord and

$$\frac{k\rho\pi c^2bl^2}{4} \tag{24}$$

for rotation about any axis parallel to the span, where l is the distance in the plane of the plate from the center of the plate to the axis of rotation.

of the structure was found by swinging the uncovered framework, and adding to the moment thus obtained the computed moment of inertia of the fabric. The additional moment of inertia of the plate, the difference between the virtual moment of inertia and the moment of inertia of the structure, was divided by the square of the pendulum length to find the additional mass. From the additional mass, k was computed. The value of k obtained in this manner agreed within 1 percent of the value given by the curve for aspect ratio 4.

As the additional mass of the fuselage is the most important additional-mass item in determining the virtual moments of inertia about the center of gravity from the swinging-test results, and as the fuselage obviously is not similar to a flat plate, an attempt was made to obtain a satisfactory value of k for fuselages. A box 20 by 5 by 5 feet was constructed and the coefficient k found by swinging tests for motion normal to one of the faces, k being based only on the dimensions of the face. The value obtained was 1.20, whereas, as shown in figure 3, the value of k for a

plate of aspect ratio 4 is 0.9. As fuselages usually have a depth greater than their width, k will have a value between 0.9 and 1.20. In practice it was decided to use 1.0.

The values for k' were found by experiment. The program for the experiments was arranged in such a manner that it was possible, when obtaining check observations, to verify the assumption that the additional moment of inertia of a plate about a given axis

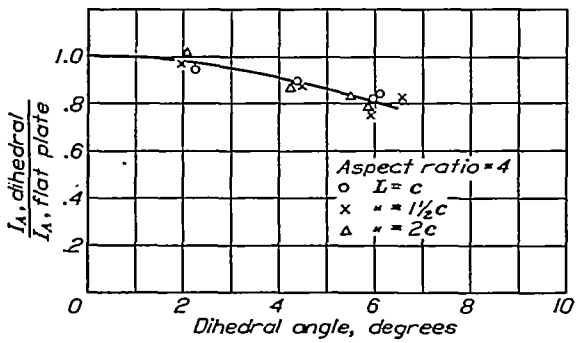

FIGURE 4.—Variation of the additional moment of inertia of a single plate with dihedral.

is independent of the distance from the axis to the plane of the plate. Four plates having aspect ratios of 2, 4, 6, and 8 were used in the experiments. These plates had a span of 4 feet and a thickness of one-fourth inch, and consisted of light wooden frameworks covered on both sides with paper. Each plate was swung at four pendulum lengths with its plane horizontal and its chord parallel to the axis of oscillation. In terms of the chord the pendulum lengths were 1, 1½, 2, and 2½. The additional moments of inertia were found

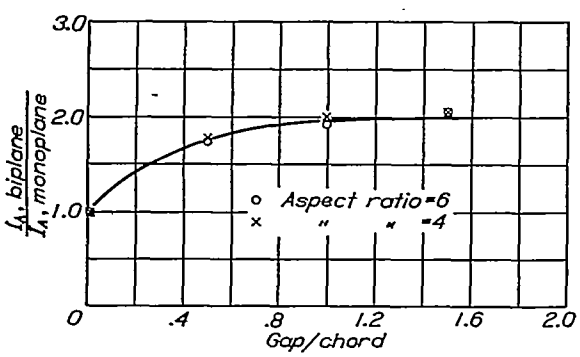

FIGURE 5.—Variation of additional moment of inertia with gap-chord ratio fo orthogonal biplanes.

by deducting the computed moments of inertia of the structure of the plate and of the entrapped air from the virtual moments of inertia determined from the swinging tests. The values of the additional moments of inertia found in this manner for each plate showed a slight amount of dispersion for the different lengths, but the variation was not consistent with pendulum length and was within the precision of the experiments. The curve for coefficient k' (fig. 3) represents the average values of the additional moments of inertia obtained for the different aspect ratios.

Additional experiments were performed to determine the effect of dihedral on the coefficient k' and the manner of treating biplanes. The value of k' was found to decrease with dihedral, as shown in figure 4, the decrease being in the order of 10 percent for 4° dihedral. In the biplane experiments gap-chord ratios of ½, 1, and 1½ were investigated for orthogonal biplane cellules consisting of plates having aspect ratios of 4 and 6. The results are given in figure 5. From these results it is concluded that for normal gap-chord ratios each wing of a biplane may be treated as an independent plate.

In the application of the general expressions for the additional moments of inertia of flat plates (equations (23) and (24)) to the airplane, the principal parts of the airplane are considered independently on the basis of their projected area in the XY, XZ, and YZ planes. Thus, in the determination of the additional moments of inertia of the airplane about an axis of oscillation parallel to the X body axis, the fuselage with length b and depth c and $L-z$ feet below the axis of oscillation will contribute an amount

$$\frac{k\rho c^2\pi b(L-z)^2}{4} \tag{26}$$

to the total moments of inertia, where z is the distance in the XZ plane from the X body axis to the center of the additional mass of the fuselage and is positive when the center of the fuselage is above the center of gravity. The distance z, however, is usually small and can be neglected and the equation written

$$\frac{k\rho c^2\pi bL^2}{4} \tag{27}$$

The vertical tail surface of the airplane can be treated similarly. The axis of oscillation lies in the plane of symmetry of both the wings and the horizontal tail surface so their additional moments of inertia are independent of L.

In general it is necessary to consider only these items. Thus, the total additional moment of inertia about the axis of oscillation equals

$$\frac{k_w'\rho c_w^2\pi b_w^3}{48}+\frac{k_{ht}'\rho c_{ht}^2\pi b_{ht}^3}{48}+\frac{k_f\rho c_f^2\pi b_f L^2}{4}+\frac{k_{vt}\rho c_{vt}^2\pi b_{vt}L^2}{4} \tag{28}$$

where the subcripts w, ht, f; and vt refer to the wings, horizontal tail surface, fuselage, and vertical tail surface, respectively, or

$$I_A+M_AL^2 \tag{29}$$

where I_A is the additional moment of inertia about the X axis and M_A, the additional mass for translation along the Y axis. Similar treatment may be applied

to the Y axis and Z axis. For the Y axis, M_A may be neglected and for the Z axis L is, of course, zero.

It should be noted that in special cases, as for float seaplanes, it may be necessary to consider other items than those mentioned and that z may not always be neglected.

APPARATUS AND PROCEDURE FOR SWINGING TESTS

SWINGING GEAR

The swinging gear is the apparatus used for supporting the airplanes during the swinging experiments. It has been constructed so as to be adaptable for airplanes up to 6,000 pounds. When used for a compound pendulum it consists of a cradle, tie rods, and knife-edges assembled as shown in figure 2. The cradle is a rectangular frame made of two I-beams for supporting the airplane and two light angle irons for spacers. The spacers are drilled to permit the distance between the I-beams to be changed to suit airplanes of different sizes. The knife-edges (fig. 6) provide a definite axis about which the pendulum oscillates with very little friction. They are mounted on a track so that their spacing can be varied when necessary. The tie rods are used to join the cradle to the knife-edges. The length and arrangement of the pendulum are varied by use of different combinations of the tie rods.

When used as a bifilar torsion pendulum, the swinging gear consists of the same essential parts as before, with the addition of two universal joints (fig. 7) and a spacer at the lower ends of the vertical members, assembled as shown in figure 1. The universal joints provide definite points of oscillation at the lower ends of the filaments. The spacer between these joints prevents a change in distance between the lower end of the vertical members when the pendulum is oscillating.

The weight, length, and center-of-gravity location of every part of the swinging gear are known so that no matter what arrangement is used it is a relatively simple process to compute the weight and center-of-gravity location of the assembly. The moment of inertia of the gear is found by swinging it as an individual pendulum.

DETERMINATION OF THE CENTER OF GRAVITY

As the center of gravity of the airplane is the origin of the axes about which the moments of inertia are to be found its location is determined before any swinging is done. The method used for locating the center of gravity is based on the principle that the center of gravity of a body suspended from a single pivot lies on a vertical line through the point of suspension. In its simplest form the method consists of suspending the airplane from two successive points in the XZ plane, and projecting a plumb line from each point of suspension on the side of the fuselage by means of a transit set up with its optical axis in a plane containing the point of suspension and perpendicular to the XZ plane of the airplane. The intersection of the two lines locates the vertical and longitudinal position of the center of gravity. Its lateral position is assumed to be in the plane of symmetry.

In practice it is not usually convenient to follow the simple method outlined above, because of the difficulty in finding points of attachment on the airplane that do not endanger the structure. A satisfactory method employing the use of the swinging gear assembled as a compound pendulum is therefore usually followed.

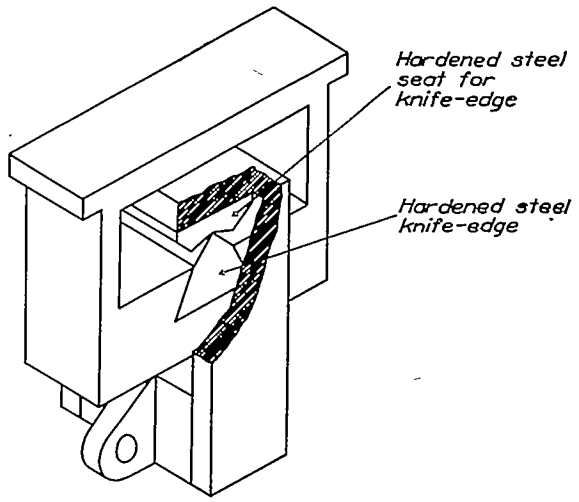

FIGURE 6.—Knife-edge.

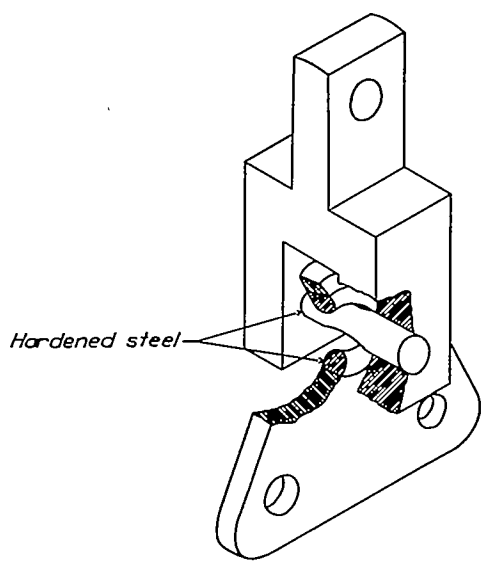

FIGURE 7.—Universal joint.

When the latter method is used the plumb line for the entire mass, airplane and swinging gear, is found as previously described and a correction is made for the effect of the swinging gear. Before the airplane is placed on the gear the variation of angle of the cradle with applied moment is determined by hanging known weights on one side of the cradle. By this procedure a calibration showing the moment corresponding to

any position of the gear is obtained. The airplane is then weighed and mounted on the gear with the X axis parallel to and equidistant from the I-beams, and in such a position that the angle assumed by the cradle is about 12° to 15°. The moment of the gear about the knife-edge axis is then found from the calibration and, since the moments of the gear and airplane are equal in magnitude, the moment of the airplane is thus obtained. The horizontal distance between the center of gravity of the entire mass and the center of gravity of the airplane is found by dividing this moment by the weight of the airplane. A vertical line drawn on the side of the fuselage at the above-calculated distance from the plumb line will then pass through the center of gravity. The fore-and-aft position of the airplane relative to the gear is then changed so that the inclination of the cradle is approximately as great as before, but in the opposite direction, and a second vertical line is drawn through the center of gravity. As by the first method, the intersection of these two lines locates the vertical and longitudinal position of the center of gravity of the airplane. A check is obtained by moving the airplane until the gear is level. A plumb line through the knife-edge axis should then pass through the intersection of the two lines previously established.

DETERMINATION OF PENDULUM CHARACTERISTICS

The second method of determining the center of gravity just described leaves the airplane suspended level and in position for swinging about an axis parallel to the Y axis. Thus, it is usually convenient to make this swinging test the next step in the procedure. The characteristics of the compound pendulum that must be measured are the weight, pendulum length, and period. The weight equals the sum of the weights of the airplane and the gear. The pendulum length is determined by measuring the difference in elevation of the center of gravity of the airplane and the knife-edges by means of a transit. The center-of-gravity location of the gear relative to the knife-edges, as previously mentioned, is computed from a knowledge of the constituents of the gear. From the center-of-gravity locations and weights of the airplane and gear, the center of gravity of the system is found. The period is found by timing 50 or more oscillations. The change of length for the check swinging is obtained by adding an additional length of tie rod in each of the four supports. When making this and other changes the weight of the airplane is never taken off the cradle, the cradle being temporarily supported by a chain hoist. The determination of the moment of inertia of the gear is, for convenience, left until all swingings with the airplane in place have been completed.

In order to place the airplane in position for the X-axis swinging, the cradle is disconnected from the tie rods, turned 90°, and again fastened to the tie rods. The spacing of the knife-edges is changed, if necessary. For the XZ axis, additional tie rods are added to either the two front or the two rear supports.

For the Z-axis swinging test the gear is assembled as shown in figure 1. The filaments are made vertical by proper spacing of the knife-edges. With the bifilar torsion pendulum the necessary measurements are the weight, the spacing and length of the filaments, and the period. Care must be taken in starting the motion to obtain an oscillation about a vertical axis, half-way between the filaments. The weight and period are obtained as before. The spacing and length of the filaments are measured directly.

COMPUTATIONS

The virtual moment of inertia about the Z axis is found by direct substitution of the pendulum characteristics in equation (12). When computing the virtual moments of inertia about the XY and XZ axes the buoyancy and additional mass are first calculated and substitution is made in equation (13). The check computation is made by substituting the values obtained from the swinging experiments for the two pendulum lengths in equation (13) and solving simultaneously for I_V. Computation of I_A is made on the basis of the equations given in the section on additional mass. Sample computations for the VE-7 airplane are given in the appendix.

PRECISION

The precision with which the moments about the body axes of an airplane can be found depends upon three items. The first item is the precision with which the virtual moments of inertia about the axis of oscillation can be found with the swinging gear and by the procedure outlined. The second item is the precision with which account is taken of the buoyancy and additional mass in transposing the compound pendulum results from the axis of oscillation to the body axes. The third item is the precision of the computation of I_A, the additional moment of inertia.

The precision with which the moments of inertia about the axis of oscillation can be found was checked by swinging a railroad rail at the pendulum lengths usually used for airplanes. The rail was a dense homogeneous body of regular dimensions, for which the moment of inertia could be calculated and the buoyancy and additional mass neglected. The moment of inertia of the rail was comparable to that of a small airplane. The magnitude of the disagreement between the calculated and experimental values of the moments about the axis of oscillation for either type of pendulum never exceeded an amount equal to 1 percent of the moment of inertia of the rail about its center of gravity. Recent improvements in the swinging gear have tended to improve the precision

so that it seems permissible to assume that the error in determining the virtual moment of inertia about the knife-edge is less than 0.5 percent of the true moment of inertia about the center of gravity.

As no transposition is necessary for the bifilar suspension, the discussion of the second item refers only to the determination of the moments of inertia about the X and Y axes. The magnitude of the combined effects of buoyancy and additional mass that must be considered in determining the virtual moments of inertia about the body axes of the compound pendulum is small in relation to the desired moments of inertia. Consequently, fairly large errors in determining these effects lead to but small errors in the final results. Experience has shown that the correction attributable to the buoyancy is about 3 percent of the moment of inertia about the center of gravity. If reasonable care is taken in computing the volume, the buoyancy can be obtained with an error of less than 10 percent. Such an error will introduce an error of 0.3 percent in the final result. For the X axis, the effect of the additional mass amounts to about 5 percent of the desired result; for the Y axis it is negligible. Although the effects of some parts of the airplane are neglected in computing the additional mass, it is believed that the error in the computation is not greater than 10 percent, hence that the error in the final results attributable to the computation of the additional mass is less than 0.5 percent. The maximum resultant error attributable to these two causes would then be 0.8 percent.

Consideration of the above-enumerated items concerning the precision with which the virtual moments of inertia about the body axes are obtained leads to the conclusion that for the X and Y body axes the precision is within ± 1.3 percent and for the Z body axis is within ± 0.5 percent, the greater precision for the Z axis arising from the fact that no transposition of axes is required. In practice it is customary to obtain check values by swinging the airplane at two different pendulum lengths and to average the results if there is a discrepancy. On the basis of the small magnitude of the discrepancies experienced it is assumed that the precision thereby obtained, particularly for the compound pendulum, is slightly improved so that the final error for the X and Y axes is less than $\pm$ 1 percent.

One remaining source of error in determining the true moments of inertia arises from the possibility of error in determining I_A, the additional moment of inertia. For the X body axis, owing to the influence of the wings, this term has been found to be as great as 20 percent of the true moment of inertia in one case but has an average value of 15 percent for the remaining cases. For the Y and Z body axes this term amounts to only about 3 percent. The values of I_A are believed to be precise to within ± 10 percent. In terms of the true moments of inertia, an error of this magnitude for the average case would amount to ± 1.5 percent for the X axis and ± 0.3 percent for the Y and Z axes. Consideration of these possible errors and those that may be incurred in determining the virtual moments of inertia leads to the conclusion that errors in the true moments of inertia are less than ± 2.5 percent for the X axis, ± 1.3 percent for the Y axis, and ± 0.8 percent for the Z axis.

Because of the nature of the airplane, the principal axes of the ellipsoid of inertia are never more than a few degrees from the body axes, and the product of inertia is only a small percentage of $C-A$. Consideration of these facts and the possible error in virtual moments of inertia leads to the conclusion that the limits of the precision with which the angle of the principal axes can be determined are $\pm 1°$.

There are several practical considerations in the construction and operation of the swinging gear that have been found by experience to have considerable bearing upon the precision of the results obtained with it. In the construction of the gear, care should be exercised in making absolutely certain that the oscillations take place about the pivots provided for that purpose. The knife-edge supports should be rigidly placed, and for the compound pendulum the tie rods from the corners of the cradle should be carried directly to the knife-edges. The importance of the latter requirement was brought out during development of the gear, when an arrangement similar to that for the bifilar torsion pendulum, but with no universal joints at the lower ends of the vertical members, was tried for the compound pendulum. This arrangement gave erratic results and inspection showed that the vertical members were flexing for a short distance from both ends. Similarly for the bifilar torsion pendulum, the universal joints and spacer bar are necessary to obtain the motion desired.

Although the pendulum dimensions are governed somewhat by the size and type of airplane to be swung, it has been found by tests that they should also be governed as far as possible by other considerations. The compound pendulum should be kept short so that the moment of inertia about an axis through its center of gravity will be a large percentage of the total moment of inertia of the pendulum about the axis of oscillation. Pendulum lengths of approximately 4 to 10 feet have given satisfactory results with airplanes weighing up to 5,000 pounds. In tests of the bifilar torsion pendulum with varied lengths of the vertical filaments and with a fixed distance between them, it was found that the most satisfactory results were obtained when the length of the filaments was greater than the distance between them. It has been found satisfactory and convenient in swinging various airplanes to place the vertical filaments about 8 feet apart.

The oscillations of both the compound and bifilar ndulums should have a small amplitude because the

pendulum formulas used apply only when the assumption $\sin\theta = \tan\theta = \theta$ (where θ equals one half the angle of oscillation) is valid. In practice, this angle need not exceed 2°.

The precision of the measurement of length of the compound pendulum depends primarily upon the accurate location of the center of gravity of the airplane. If it is not located accurately, the pendulum dimensions will be in error even though subsequent measurements are very precise.

Swinging the airplane at two pendulum lengths about each axis, not only is useful in checking the additional-mass effect, but also provides a check on the swinging tests themselves. Similarly, it is a good practice to swing the airplane in both the nose-up and nose-down attitudes to afford a check on the position of the principal inertia axes of the airplane.

RESULTS OBTAINED FOR SEVERAL AIRPLANES

The method given in this report for the determination of the moments of inertia has been used regularly by the Committee and, in all, the moments of inertia have been found for 13 airplanes. These results are listed in table I. The angle between the X body and the X principal axis, being small, is omitted. The additional moments of inertia about the three axes are given.

DETERMINATION OF MOMENTS OF INERTIA BY CALCULATION

There are times when it is desired to estimate the moments of inertia of airplanes not available for swinging tests. It is usual in these cases to compute the moments of inertia by a summation of the moments of inertia of the constituent parts. As the accuracy of the results of such computations has been questioned, it was decided to check the results by computing the moments of inertia for an airplane for which the moments of inertia have been found experimentally. The computations were made carefully; a balance diagram was used to locate the parts relative to the center of gravity, and the true weights of each part were found by weighing the individual parts for the airplane in question. On comparison of the computed with the experimental values of true moments of inertia, it was found that the computed value was in error by 6 percent for the X axis. For the other axes the error was less.

CONCLUSIONS

1. The pendulum method for finding moments of inertia can be successfully applied to airplanes.
2. Owing to the effect of the ambient air, the virtual moments of inertia obtained directly through application of the pendulum formulas are considerably greater than the desired true moments of inertia.
3. The effects of the ambient air can be determined with sufficient precision so that the true moments of inertia may be obtained from swinging experiments with an error of less than ±2.5 percent, ±1.3 percent, and ±0.8 percent for the X, Y, and Z axes, respectively.

Langley Memorial Aeronautical Laboratory,
National Advisory Committee for Aeronautics
Langley Field, Va., *June 8, 1933.*

APPENDIX

SAMPLE COMPUTATIONS

The following are sample data and computations for determining the ellipsoid of inertia for the *VE-7* airplane.

VIRTUAL MOMENTS OF INERTIA

For the X body axis the compound pendulum is used and the equation for the virtual moment of inertia about the axis is

$$I_{V_X}=\frac{W_1T_1^2L_1}{4\pi^2}-\frac{W_2T_2^2L_2}{4\pi^2}-\left(\frac{W}{g}+V\rho+M_A\right)L^2$$

The experimental data obtained by swinging the airplane about axes parallel to the X axis are:

	Short suspension	Long suspension
W	2,208 pounds	2,208 pounds.
W_1	2,591 pounds	2,584 pounds
W_2	383.3 pounds	376.1 pounds.
L_1	9.050 feet	13.81 feet.
L	9.513 feet	14.32 feet.
L_2	6.382 feet	10.84 feet.
T_1	3.759 seconds	4.378 seconds.
T_2	3.209 seconds	3.931 seconds.

The volume V is computed from the dimensions of the airplane. Only the fuselage and wings are considered. The fuselage is treated in three sections:

Section	Length	Average cross-section	Volume
	Feet	*Square feet*	*Cubic feet*
1	7.5	7.95	59.7
2	7.0	6.51	45.5
3	7.0	2.08	14.6
Total volume of fuselage, V_f			119.8

The volume of the wings is determined by the equation

$$V_w=0.74St$$

where S is the wing area $=312$ square feet
and t is the maximum ordinate of the wing $=0.298$ feet from which

$$V_w=0.74\times312\times0.298=69 \text{ cubic feet}$$

then

$$V=V_f+V_w=119.8+69=188.8 \text{ cubic feet}$$

The tests were made at sea level under approximately standard conditions so that

$$\rho=0.00238 \text{ slug per cubic feet}$$

The additional mass is computed only for the fuselage and vertical tail surface. The fuselage is again divided into three sections. The coefficient k is assumed to be unity, so

$$M_{A_f}=\frac{\rho c_1^2\pi(\Delta b)_1}{4}+\frac{\rho c_2^2\pi(\Delta b)_2}{4}+\frac{\rho c_3^2\pi(\Delta b)_3}{4}$$

where c_1^2, c_2^2, and c_3^2 are the mean values of the squares of the fuselage depths for each of the three sections.

Section	Δb	c^2	ΔM_A
	Feet	*Sq. ft.*	*Slug*
1	7.5	9.50	0.133
2	7.0	9.00	.118
3	7.0	5.14	.067
Total additional mass for fuselage M_{A_f}			.318

The vertical tail area of this airplane may be considered of circular shape and its additional mass as

$$M_{A_t}=\frac{\pi D^3\rho}{6}.$$

where $D=4$ feet

so $$M_{A_t}=\frac{\pi\times(4)^3\times0.00238}{6}=0.079 \text{ slug}$$

and $M_A=M_{A_f}+M_{A_t}=0.318+0.079=0.397$ slug.

Substituting in the compound-pendulum formula:
Short suspension

$$I_{V_X}=\frac{2591\times(3.759)^2\times9.05}{39.48}-\frac{383.3\times(3.209)^2\times6.382}{39.48}$$
$$-\left[\frac{2208}{32.147}+(188.8\times0.00238)+0.397\right](9.513)^2$$
$$=1463 \text{ slug feet}^2$$

Long suspension

$$I_{V_X}=\frac{2584\times(4.378)^2\times13.81}{39.48}-\frac{376.1\times(3.931)^2\times10.84}{39.48}$$
$$-\left[\frac{2208}{32.147}+(188.8\times0.00238)+0.397\right](14.32)^2$$
$$=1474 \text{ slug feet}^2$$

The average value of I_{V_X} is 1469 slug feet^2.

I_{V_X} is checked by solving the equations for the two suspensions simultaneously, I_{V_X} and $V\rho+M_A$ being the unknowns.

$$I_{V_X}=1545+(V\rho+M_A)\ (9.513)^2$$
$$I_{V_X}=1649+(V\rho+M_A)\ (14.32)^2$$
$$I_{V_X}=1462 \text{ slug feet}^2$$

The agreement is within 0.5 percent.

The virtual moments of inertia about the Y axis and the XZ axis are calculated in a similar manner from the data obtained with the compound pendulum. In the case of the Y axis, the additional mass is very small, and therefore neglected. In the case of the XZ axes, the additional mass is the same as for the X axis.

The equation for the bifilar pendulum which is used for a determination of the virtual moments of inertia about the Z axis is

$$I_{V_Z}=\frac{W_1T_1^2A^2}{16\pi^2l}-\frac{W_2T_2^2A^2}{16\pi^2l}$$

The experimental data obtained by swinging are

	Short suspension	Long suspension
W_1	2,575 pounds	2,575 pounds.
W_2	367 pounds	367 pounds.
T_1	2.622 seconds	3.808 seconds.
T_2	3.238 seconds	3.398 seconds.
A	9.917 feet	9.917 feet.
l	7.412 feet	8.237 feet.

From which is obtained:
Short suspension

$$I_{V_Z}=\frac{2575\times(3.622)^2\times(9.917)^2}{157.92\times7.412}-\frac{367\times(3.238)^2\times(9.917)^2}{157.92\times7.412}=2515 \text{ slug feet}^2$$

Long suspension

$$I_{V_Z}=\frac{2575\times(3.808)^2\times(9.917)^2}{157.92\times8.237}-\frac{367\times(3.398)^2\times(9.917)^2}{157.92\times8.237}=2505 \text{ slug feet}^2$$

the average of which is 2,510 slug feet^2.

The average value of the moment of inertia about each axis is as follows:

$I_{V_X}=1469$ slug feet^2
$I_{V_Y}=1498$ slug feet^2
$I_{V_Z}=2510$ slug feet^2
$I_{V_{XZ}}=1546$ slug feet^2 (from nose-up swinging, X axis inclined 13.4°)
$I_{V_{XZ}}=1490$ slug feet^2 (from nose-down swinging, X axis inclined 13°)

ADDITIONAL MOMENTS OF INERTIA

The additional moment of inertia about the X axis is assumed to be contributed only by the wings and the horizontal tail surface. The X axis is in the plane of symmetry of both the wings and the tail surface. The equation for the additional moment of inertia for this case is

$$I_A=\frac{k'\rho c^2\pi b^3}{48}$$

For the wings

$c=4.62$ feet $b=34.33$ feet aspect ratio $=7.4$

then, from figure 3,

$$k'=0.89$$

and

$$I_{A_w}=\frac{2\times0.89\times0.00238\times(4.62)^2\times\pi\times(34.33)^3}{48}=241 \text{ slug feet}^2$$

For the horizontal tail

$c=4.08$ feet $b=9.50$ feet aspect ratio $=2.5$

then

$$k'=0.62$$

and

$$I_{A_t}=\frac{0.62\times0.00238\times(4.08)^2\times\pi\times(9.50)^3}{48}=1.3 \text{ slug feet}^2$$

so that for the X axis

$$I_{A_X}=I_{A_w}+I_{A_t}=241.0+1.3=242.3 \text{ slug feet}^2$$

The principal items that contribute to the additional moment of inertia about the Y axis are the fuselage and horizontal tail surface. For the horizontal area of the fuselage an equivalent rectangle is considered, with length equal to that of the fuselage, and width equal to the square root of the mean square of the fuselage width. The dimensions are

$b=18.3$ feet $c=2.07$ feet aspect ratio $=8.8$

for which

$$k'=0.95$$

As the Y axis is parallel to the chord but is displaced from the center of the additional mass of the fuselage by a distance l,

$$I_{A_f}=\frac{k'\rho c^2\pi b^3}{48}+\frac{k\rho c^2\pi bl^2}{4}$$

The constant k is assumed to be 1.0 and

$$l=4.1 \text{ feet}$$

Thus

$$I_{A_f}=\frac{0.95\times0.00238\times(2.07)^2\times\pi\times(18.3)^3}{48}+\frac{1.0\times0.00238\times(2.07)^2\times\pi\times18.3\times(4.1)^2}{4}=6.3 \text{ slug feet}^2$$

The Y axis is parallel to the span of the horizontal tail, so that

$$I_{A_t}=\frac{k\rho c^2\pi bl^2}{4}$$

where $k=0.78$ and $l=15.8$ feet
and

$$I_{A_t}=\frac{0.78\times0.00238\times(4.08)^2\times\pi\times9.50\times(15.8)^2}{4}=57.6 \text{ slug feet}^2$$

Then for the Y axis

$$I_{A_Y}=I_{A_f}+I_{A_t}=6.3+57.6=63.9 \text{ slug feet}^2$$

The determination of I_{A_Z} is similar to that for I_{A_Y} with the difference that the vertical fuselage and tail areas are considered;

$$I_{A_Z}=31.6 \text{ slug feet}^2$$

TRUE MOMENTS OF INERTIA

The true moment of inertia about any axis is the difference between the virtual moment of inertia and the moment of inertia of the additional mass about that axis. Thus

$$A=I_{V_X}-I_{A_X}=1469-242=1227 \text{ slug feet}^2$$
$$B=I_{V_Y}-I_{A_Y}=1498-\ \ 64=1434 \text{ slug feet}^2$$
$$C=I_{V_Z}-I_{A_Z}=2510-\ \ 32=2478 \text{ slug feet}^2$$

$$I_{XZ}(\text{nose-up})=I_{V_{XZ}}(\text{nose-up})-I_{A_X}=1546-242$$
$$=1304 \text{ slug feet}^2$$

$$I_{XZ}(\text{nose-down})=I_{V_{XZ}}(\text{nose-down})-I_{A_X}=1490$$
$$-242=1248 \text{ slug feet}^2$$

Location of Principal Axes:

The product of inertia about the body axis is given by

$$D=\frac{A\cos^2\theta+C\sin^2\theta-I_{XZ}}{\sin 2\theta}$$

where

	Nose-up	*Nose-down*
$\theta=$	$-13.4°$	$13.0°$
$\sin\theta=$	-0.2317	0.2250
$\cos\theta=$	$.9728$	$.9744$
$\sin 2\theta=$	$-.4509$	$.4384$

and the moments of inertia are as given above.

From the nose-up swinging

$$D=\frac{1227\times(0.9728)^2+2478\times(-0.2317)^2-1304}{-0.4509}=21.5$$

From the nose-down swinging

$$D=\frac{1227\times(0.9744)^2+2478\times(0.2250)^2-1248}{0.4384}=96.7$$

the average of which is $D=59.1$

The tangent of twice the angle between the principal axis and the X axis is given by

$$\tan 2\tau=\frac{2D}{C-A}$$

$$\tan 2\tau=\frac{2\times 59.1}{2478-1227}=0.09445$$

$$\tau=2°42'$$

Principal Moments of Inertia:

The principal moments of inertia are given by

$$A^{IV}=A\cos^2\tau+C\sin^2\tau+D\sin 2\tau$$
$$B^{IV}=B$$
$$C^{IV}=A\sin^2\tau+C\cos^2\tau-D\sin 2\tau$$

then, since

$$\tau=2°42'$$
$$\sin\tau=0.0471$$
$$\cos\tau=0.9989$$
$$\sin 2\tau=0.0941$$

and the other quantities are as previously determined, it follows that

$$A^{IV}=1227\times(0.9989)^2+2478\times(0.0471)^2+59.1\times 0.0941$$
$$=1236 \text{ slug feet}^2$$

$$B^{IV}=1434 \text{ slug feet}^2$$

$$C^{IV}=1227\times(0.0471)^2+2478\times(0.9989)^2-59.1\times 0.0941$$
$$=2471 \text{ slug feet}^2$$

REFERENCES

1. Miller, M. P.: An Accurate Method of Measuring the Moments of Inertia of Airplanes. T.N. No. 351, N.A.C.A., 1930.
2. Miller, Marvel P., and Soulé, Hartley A.: Moments of Inertia of Several Airplanes. T.N. No. 375, N.A.C.A., 1931.
3. Green, George: Researches on the Vibration of Pendulums in Fluid Media. Trans. of the Roy. Soc. of Edinburgh, pp. 54–62, vol. 13, 1836.
4. Gates, S. B.: Moments of Inertia of Aeroplanes. R. & M. No. 1415, British A.R.C., 1932.
5. Pabst, Wilhelm: Theory of the Landing Impact of Seaplanes. T.M. No. 580, N.A.C.A., 1930.

TABLE I.—MOMENTS OF INERTIA OF SEVERAL AIRPLANES

Airplane	Type	Weight (lb.)	A (slug ft.²)	B (slug ft.²)	C (slug ft.²)	I_{A_X} (slug ft.²)	I_{A_Y} (slug ft.²)	I_{A_Z} (slug ft.²)
VE-7	Naval training, biplane landplane	2,208	1,227	1,434	2,478	242	64	32
PT-1	Army training, biplane landplane	2,512	1,967	2,088	3,289	238	80	54
PW-9	Army pursuit, biplane landplane	2,885	1,299	1,888	2,648	101	42	25
NY-1	Naval training, biplane landplane	2,622	2,098	2,450	3,807	238	80	80
Doyle O-2	Commercial monoplane, landplane	1,388	596	659	971	97	14	9
O2U-3	Naval observation, biplane landplane	3,550	2,482	2,796	4,481	335	84	49
F4B-1	Naval fighter, biplane landplane	2,540	1,023	1,560	2,077	124	30	15
O-11	Army observation, biplane landplane	4,558	2,507	4,133	6,231	370	105	59
NB-1	Naval training, biplane landplane	2,544	2,409	2,239	4,099	347	67	44
XN2Y-1	Naval training, biplane landplane	1,567	732	922	1,299	86	22	17
O3U-1	Naval observation, biplane landplane	4,057	2,740	3,283	5,112	335	84	49
F4B-2	Naval fighter, biplane landplane	2,816	1,063	1,795	2,378	124	30	15
McDonnell	Experimental low-wing monoplane equipped with slots and flaps.	1,708	1,345	1,101	2,279	167	42	26