National Advisory Committee
for Aeronautics
AUG 16 1934
AUG 21 1934
Library L. M. A. L.
Copy

TECHNICAL NOTES

NATIONAL ADVISORY COMMITTEE FOR AERONAUTICS

No. 503

MEASUREMENT OF ALTITUDE IN BLIND FLYING

By W. G. Brombacher
Bureau of Standards

FILE COPY
To be returned to
the files of the Langley
Memorial Aeronautical
Laboratory.

Washington
August 1934

3 1176 01433 1160

NATIONAL ADVISORY COMMITTEE FOR AERONAUTICS

TECHNICAL NOTE NO. 503

MEASUREMENT OF ALTITUDE IN BLIND FLYING

By W. G. Brombacher

SUMMARY

Instruments for measuring altitude and rate of change of altitude in blind flying and landing of aircraft and their performance are discussed. Of those indicating the altitude above ground level, the sonic altimeter is the most promising. Its present bulk, intermittent operation, and more or less unsatisfactory means of indication are serious drawbacks to its use.

The sensitive type aneroid altimeter is now quite generally used. Dividing the errors incident to its use into those due to the instrument and those inherent in the barometric method of measuring altitude, it is shown that the instrumental errors, except the error arising from changes in instrument temperature, do not ordinarily exceed 0.75 percent of its range (20,000 feet) when using the instrument to fly at a definite pressure level. These can be reduced to an uncertainty of 40 feet in landing at an airport if corrections are applied.

Of the other errors, that due to variation in air temperature from the temperature of the standard atmosphere gives rise to errors as high as 10 percent, but ignoring this error does not usually cause a serious loss in safety since at any particular time it is very nearly a constant percentage of the altitude. The error introduced by change in the barometric pressure at the ground level with time and place may be as much as ±300 feet in summer and ±1,000 feet in winter, and can be corrected for only at the time of landing by obtaining data on the air pressure at the ground level from an airport. The instrument can be used in clearing obstacles only when their elevation and location are known.

The errors in flying at a pressure level and in landing are discussed in detail.

INTRODUCTION

When flying under conditions of low or zero visibility, an indication of the altitude of the airplane is essential to safe and proper navigation. Thus,

(a) A safe altitude above the ground level must be maintained. For this purpose a knowledge of the altitude above the ground level, or absolute altitude, is required. Several organizations (reference 1) have carried on development work with some success on instruments designed to indicate the absolute altitude, but no instrument of this type is as yet quite out of the experimental stage. For this reason the aneroid altimeter, together with a knowledge of the topography of the country flown over, is utilized in maintaining a safe altitude above the ground level.

(b) In making "blind" landings with the aid of one of the blind landing systems (references 2,3,4 and 5), a continuous indication of the altitude above the ground level is desirable, if not absolutely essential. This need is the chief reason for the development of absolute altimeters. The aneroid altimeter when adjusted and corrected as hereinafter discussed, must at present be generally relied upon for indicating the altitude above the landing field.

(c) Level flight, within reasonable tolerances, is essential in blind flying, not with reference to the distance above the earth's surface, but at a level of constant air pressure, that is, along an isobar. Flight at a constant altitude above the earth's surface, following the changing contours, is obviously undesirable. To maintain level flight as ordinarily understood, the actual pressure level is indicated in terms of altitude by the sensitive aneroid altimeter. The rate of change from this pressure level may be indicated either by a rate-of-climb indicator or by the sensitive altimeter and the change in attitude by the altimeter.

Neither the absolute nor aneroid altimeter indicate obstacles in the line of flight. In cross-country flying these obstacles are most generally a mountain peak or mountain side. In making landings, chimneys, towers, buildings, and power lines are the principal obstacles. No indicator of obstacles in the line of flight has as yet

been developed nor, to the knowledge of the writer, is any serious development work in progress. This is due primarily to the lack of possible methods of attack.

In cross-country flying pilots should have but little difficulty in flying at a safe altitude above peaks, relying upon the indications of the aneroid altimeter if the elevation of the highest peaks along the line of flight are known and if allowance for the variation in ground-level pressure is made. This is the only method at present available and while ordinarily sufficient in the hands of properly trained pilots on familiar air lines, is far from being as satisfactory as an indication of obstacles. Accidents from time to time in which airplanes have been flown into mountain sides are evidence of the need of a distinct means of indicating their presence ahead. The pilot should be spared the necessity of making even the simplest computation and of securing any information from the ground. It should be remarked that an absolute altimeter is not primarily useful in clearing steep mountain peaks and sides.

It appears that obstacles surrounding a landing field may be cleared by making the landing by one of the methods which have been developed (references 2, 3, 4, and 5). The removal of the obstacles in so far as possible is essential.

ABSOLUTE ALTIMETERS

Most of the development work on absolute altimeters has been on three types, commonly called the sonic, radio, and capacity altimeters.

Sonic Altimeters

Of the absolute altimeters, the sonic type appears the most promising in the present stage of development. The principal defect is that of intermittent indication and perhaps of excessive weight and bulk.

In all its forms the sonic altimeter consists of (a) a source of sound and (b) apparatus for measuring the time interval between the emission of a sound and the arrival of an echo from the ground. In one design this time interval is estimated by ear. Since the principal utility is at low altitudes and the velocity of sound is about 1,080

feet per second, time intervals of less than one second must ordinarily be measured. One of the primary difficulties is to avoid interference from the noise of the aircraft engine and propeller.

The velocity of sound varies with temperature at a rate of 0.19 percent per degree Centigrade. It is practically independent of barometric pressure. Both the air speed of the airplane and the horizontal distance between the point of sound emission and the point at which the echo is received influence the amount of the time interval, but, with proper calibration of the timer, to a negligible extent. (See reference 6.)

The characteristics of the echo vary with the terrain under the aircraft to a sufficient degree so as to give considerable information on its character, whether forest, water, or open field.

Behm sonic altimeter.- The Behm altimeter consists essentially of a detonating mechanism for producing the sound, two microphones and megaphones, and a time-interval indicator graduated in altitude units. A schematic diagram is shown in figure 1. A gun, automatically fired in the latest design, is used as the source of sound. The time-interval indicator consists of a small flywheel A, a projection of which is held pressed against a plate spring B by means of an electromagnet C and armature Q. A sector D, operated by a pinion E on the flywheel shaft, carries a small mirror F from which a beam of light from electric lamp G is reflected to a scale H. The light is focused by means of a short-focus lens J which is supported upon a plate spring which in turn is acted upon by an electromagnet K. When the gun L is fired, current in the electromagnet C momentarily is reduced by the action of the sound on the microphone M. This releases the flywheel A and thus rotates the mirror F. When the echo is received by the microphone N, the electromagnet K moves the spring upon which the lens J is mounted so that the image of the light on the scale is deflected at right angles to the line of its motion. At the point of oscillation of the light beam P the scale is read. The usual range of the instrument is 100 meters (328 feet).

Flight tests made by the D.V.L. (references 6 and 7) show that the instrument has a mean error of ±3-1/2 meters in the range from 20 to 100 meters, and from 1 to 2 meters

in the range below 20 meters. These tests were made with the engine running at 1,200 to 1,250 r.p.m. The weight of the instrument in the form described above is about 25 pounds.

G.E. sonic altimeter.- The earlier model of the instrument (reference 8) is shown schematically in figure 2. The sound from a whistle W is directed downward by a megaphone S and its echo is received by megaphone R. At the instant the sound is emitted, a spring-driven timer T is started by means of a solenoid. The indication of this timer is observed at the instant the echo is heard through the stethoscope ST. At low altitudes the timer is not ordinarily used and the altitude is based on an estimate by the observer of the interval of time between the emission of the sound and the arrival of the echo.

As air compressors are not ordinarily installed on aircraft, gas is bled from the exhaust of an engine cylinder (EC in fig. 2) through a check valve and stored at a pressure of about 50 pounds per square inch in the tank PT. The whistle has a frequency of 3,000 cycles per second and is operated every two seconds by means of a motor-controlled valve. The control apparatus is indicated at CA. The bleeder line BL increases the strength of the direct signal from the whistle in the stethoscope and the acoustic filter AF filters out low-frequency components due mainly to the engine and propeller.

In the above design the range was made as great as possible. With the engine running at cruising speed, indications up to 800 feet were obtained; with the engine idling, up to 1,400 feet. The weight of the instrument is about 30 pounds.

The above-described instrument has been lately modified to have a lower range, about 100 feet, which is all that appears to be essential in landing blind. A metal diaphragm periodically operated by electrical means to produce a sound of 3,000 c.p.s., is used instead of the whistle, thus eliminating the bleeding of one of the engine cylinders. The sound received after reflection from the earth's surface is passed through a two-stage amplifier. The incident and reflected sounds are transmitted to the radiotelephone in the headgear, giving rise to a sound superimposed upon the radio signals.

Dubois-Laboureur sonic altimeter.- This instrument has a unique method of indication which eliminates the use of relays with contacts. (See references 9 and 10.) At the instant of emission of the sound a neon lamp is lighted by means of a slight addition to the voltage across it. During the time the neon lamp is lighted an electric condenser, the negative side of which is connected to the grid of a vacuum tube, is being charged. At the instant of reception of the reflected sound a control is operated so that the neon lamp is put out. The maximum change in the plate current, measured by a milliammeter, is an indication of this time interval and thus of the altitude.

The sound is made automatically at intervals of either two or four seconds by a membrane vibrated by means of compressed air at a frequency of 1,200 c.p.s. The echo is received by an electromagnetic microphone.

The instrument has two ranges, 5 to 60 and 20 to 500 meters, the latter of which is obtained by adding a resistance to the capacity circuit. The weight of an instrument is stated to be 40 pounds, and 48 pounds with an air compressor.

Delsasso sonic altimeter.- Delsasso (reference 11) has developed a sonic altimeter which flight measurements show to have a range from 4 to 700 feet. No details are available as this is written prior to the issue of his paper.

Radio Altimeters

A number of electrical circuits have been proposed (references 1, 12, 13) for utilizing the interference effects of radio waves received after reflection from the earth's surface in order to measure the altitude of aircraft. The reflected waves are received by the oscillator and affect to a measurable extent both its amplitude and frequency. This has led to experiments on methods of indication depending on beat frequencies and on phase differences. According to Green (reference 13) the radio altimeter functions accurately at altitudes above 650 feet and is of no value below 350 feet, which is a distinct limitation.

No instrument of this type thus far developed has a satisfactory performance. The weight and bulk of the radio altimeter are likely to be excessive for general use.

Capacity Altimeters

Considerable work on this type of altimeter has been done by Gunn (reference 14) in this country. It depends for its indication upon the change with proximity of the ground in the electrical capacitance of two plates mounted on the aircraft. The maximum range in indication attained is of the order of 100 feet, which is too low for most purposes.

Theremin has proposed a circuit in which a visual and continuous means of indication is provided. No details are available.

BAROMETRIC ALTIMETERS

The barometric type altimeter is an aneroid barometer graduated to indicate altitude in accordance with the altitude-pressure-temperature relation which defines the standard atmosphere. A single standard known as the United States Standard Atmosphere is now used for aeronautic purposes (reference 15).

Altimeters may be divided into two classes, solely on the basis of their sensitivity, into ordinary instruments and sensitive altimeters. In ordinary altimeters the sensitivity in general does not exceed one revolution of the pointer for each 10,000 feet. In the sensitive type the pointer makes one revolution per 1,000 feet.

The sensitive altimeter is relatively more useful in blind flying since it can also be used to fly level, that is, to indicate slight changes in altitude. Only the sensitive altimeter will be discussed in this report although much of the discussion will apply equally well to the older type instrument.

The use of the aneroid altimeter to measure altitude above the ground level is subject to a number of inherent disadvantages, which in certain cases may be offset by suitable corrections. The disadvantages are as follows:

(a) The instrument does not measure altitude. It measures pressure, but is calibrated in altitude units in accordance with the altitude-pressure relation of the standard atmosphere. A given reading, therefore, corresponds to a definite pressure level and not, in general, to an altitude level.

(b) The instrument indicates the altitude above a fixed level on the earth, such as sea level, only at the time of take-off. The indication is adjusted, usually at the time of take-off, so that the altimeter reads zero, and then indicates in standard altitude the height above the level determined solely by the air pressure of the field at the time of adjustment. But the altitude above sea level corresponding to this reference pressure varies with respect to both time and place. Thus under average summer conditions in the United States the variation in air pressure at the ground level introduces an uncertainty of about ±100 feet in standard altitude at the terminus of a cross-country flight of about five hours. Unusual conditions increase this up to ±300 feet. In winter, the average uncertainty is ±300 feet and may be as much as ±1,000 feet under unusual conditions.

(c) The barometric method of measuring the absolute altitude above any base depends on measurements of both the air pressure and temperature, and on measurements of other quantities which may be neglected here. If the altitude above the ground level is desired, the indications of the altimeter must be corrected for deviation of the temperature of the air column from that assumed in the standard atmosphere used as the altimeter calibration standard.

An approximate method of computing this correction, which is sufficiently accurate in most cases, merely involves measuring two air temperatures, one at the ground level and the other at the flight level. The average of these two temperatures gives approximately the mean temperature of the air column. The correction can then be obtained from published tables, or as is often preferred, the entire computation can be made on a computer such as has been designed for the purpose.

(d) As a corollary of (b), the altimeter is not "self-contained" when used in making a landing. It is necessary to obtain knowledge, by radio or other means, of the atmospheric pressure at the level of the landing field just previous to landing. This offers little trouble when a landing is made at an airport with the proper facilities for this service.

Sensitive Altimeter

History.- A brief statement on the development of sensitive altimeters may be of interest. The first instrument was built about 1923 by the Engineering Division of the Army Air Service at McCook Field, Dayton, Ohio. The development was continued by Julien P. Friez and Sons, and by the Taylor Instrument Companies, both organizations having constructed instruments for the Army Air Corps. Although the design of the multiplying mechanism of these various instruments differed somewhat, all were of the same size, with the main dial six inches in diameter. The instruments had two pointers with the axis of one of them offset like the second hand of a watch. The range was 20,000 feet with the main pointer making one revolution for each 1,000 feet. The other pointer was used to indicate the number of revolutions of the main pointer. The smallest scale division corresponded to a change in altitude of 10 feet, the scale being evenly divided.

The Kollsman instrument was originally built to comply with specifications issued by the Bureau of Aeronautics of the Navy Department. It differs from the earlier instruments in that the dial is 2-3/4 inches in diameter, the same as that of the standard-service altimeter, and that the smallest scale division corresponds to a change in altitude of 20 feet. Further, the two pointers are concentric, a change which increases the convenience in reading.

Description.- The mechanism is shown diagrammatically in figure 3. The pressure-sensitive element consists of three evacuated diaphragm capsules D. These are free to expand along their principal axis as the air pressure is reduced. The element is attached to a mounting plate at the center of the rear capsule and to a multiplying mechanism at the center of the front capsule. As the capsules deflect with change in pressure, a lever connected to the center of the capsules rotates bell crank B and sector S. Through gears G1, G2, and G3, pointer shaft P_1 is rotated at a rate of one revolution for each 1,000 feet change in altitude. Pointer shaft P_2, on which a shorter pointer is mounted, is rotated through an additional gear train at a rate of one revolution for each 10,000 feet. A third and smaller pointer (not shown in the figure) which indicates the full range of the instrument in one revolution is placed on shaft P_3. Backlash is taken up by hairspring H. A weight M is used to balance the mechanism for the effect of changes in orientation of the

instrument. The spring R adds stiffness to the pressure element.

The bimetallic bar T changes its curvature with temperature and thus causes a deflection in the same way as the pressure element. This deflection is so chosen as to compensate at one pressure (760 mm or 29.92 inches of mercury) for changes in the reading which would otherwise occur due to changes in the temperature of the instrument.

Due to the extreme sensitivity of the instrument, accuracy and smooth operation is obtained only by the use of gears cut to extremely fine tolerances and by close adjustment of the mechanism.

The instrument mechanism is installed in a standard bakelite case of the 2-3/4-inch dial size. The depth of the case proper is about 3-5/8 inches.

The air pressure in the cockpit or cabin of an airplane may deviate from the static air pressure by as much as an equivalent altitude of 100 feet under the conditions of flight, which introduces an uncertainty of the same amount in the indications of altimeters. This is avoided by connecting the case of the altimeter to a static tube mounted on a strut, usually that of the pitot-static airspeed meter. It is obvious that the case of the altimeter must be airtight against this small differential pressure.

Adjustments.- Altimeters are constructed with adjustments which greatly facilitate their usefulness. These adjustments have taken various forms in an effort to meet the various conditions of operation, and it is not evident that any one adjustment is universally accepted as satisfactory. Four of these are briefly described.

(a) One type as shown in figure 4, is equipped with a knob K for simultaneously rotating the pointers and the small triangular markers or indices M in opposite directions. Assuming no instrumental errors, the pointers will indicate the altitude above the particular pressure level corresponding to the indication of the markers. If the markers are adjusted to read zero (fig. 4A), the pointers will indicate zero when the instrument is subjected to an air pressure of 760 mm (29.92 inches) of mercury (zero altitude), and also will indicate altitudes above (or below) this reference level at other air pres-

sures. If the markers are adjusted to indicate 210 feet, as shown in figure 4B, the pointers will indicate zero when the air pressure has the value corresponding to an altitude of 210 feet.

It is thus apparent that if it is possible to adjust the altimeter markers to the altitude corresponding to the pressure at the airport ground level just previous to making a landing, the pointers will indicate, except for instrumental error, the altitude above the landing field.

(b) In another type of adjustment the altitude dial only is rotatable and is provided with an index for indicating pressures on a sub-dial as shown in figure 5. The direction of increasing values is clockwise for both dials.

Assuming no instrumental errors, the pointers indicate the altitude above the level at which the air pressure is that indicated on the pressure dial. Thus, in figure 5 the pressure dial is set to read a pressure of 30.22 inches of mercury. The pointers will theoretically read zero when the instrument is subjected to this pressure.

It is seen that except for adjusting to a pressure instead of to an altitude, this arrangement is equivalent to that described under (a). It has one advantage in that there is no necessity for attention to plus and minus values as is the case in adjusting to a reference altitude. A disadvantage is that some provision must be made so that the pressure scale has an adequate range and, in order to hold to a simple mechanical design, does not exceed one revolution. This can be done by having both the pressure and altitude dials rotatable simultaneously in the same direction, the altitude dial rotating at the more rapid rate. Such is the case in the instrument shown in figure 5, where the pressure scale is only one third as open as the altitude scale and consequently the ratio of the rates is 3 to 2. This scheme has obvious limits, since it reduces the sensitivity of the adjustment and thus fails to utilize the full sensitivity of the altimeter.

(c) An adjustment which is equivalent to type (b) is that in which the altitude dial is fixed and the pressure dial and pointers are rotatable, as also illustrated by figure 5. If the pressure and altitude scales increase both in a clockwise direction, as in figure 5, the pointers and dial rotate in opposite directions. As

for case (b) it is necessary to compress the pressure scale so as not to exceed one revolution, which is accomplished by rotating the pressure dial at a slower rate than the pointers. In figure 5 this rate is 3 to 1. The comments made under (b) on the limitations apply with equal force to this type.

(d) The methods of adjustment thus far described are particularly useful in measuring altitude in landing. In level flight it is desirable to have the pointer horizontal so that its movement upward indicates climb, and downward, descent. This requires in general that the entire mechanism, including the pointers and the dial, be rotatable.

In one experimental design the altimeter has only a sensitive pointer, thus necessitating another altimeter for indicating the altitude. In this design the entire mechanism, including the pointer, but usually excepting the dial, is rotatable by means of a knob. When the altitude is reached at which flight is to be maintained, the mechanism is rotated so that the pointer is opposite a fixed index.

It has been common practice to include a means for making only one adjustment on altimeters so that up to the present a choice must be made between an adjustment for landing such as described under (a), (b), or (c), or for level flying. The instrument adjustable for utility in landing is usually preferred. If it were found feasible by means of a simple mechanism to incorporate in a single instrument the adjustment useful in making a landing, either (a), (b), or (c) as described, and that for flying level, as stated under (d), the possibilities of the aneroid altimeter could be exploited to the maximum.

Errors of altimeters.- In considering the errors of sensitive altimeters, it should be recalled that the smallest scale division on the dial equals 10 feet of altitude and that the instrument can be read to a precision of 2 feet in the laboratory and not less than 5 feet in flight. The accuracy of engineering instruments is usually expressed as a percentage of the maximum range. For these altimeters the accuracy is 0.05 percent if the errors do not exceed the smallest scale division of 10 feet. When it is remembered that most engineering instruments with an accuracy of one percent are satisfactory, it is obvious that in considering a higher accuracy many sources of er-

ror must be considered which may ordinarily be neglected. A thorough consideration of possible errors and their evaluation in the laboratory is the more important since a number of the errors are indeterminate under the conditions of flight.

The errors of altimeters are considered in detail in a report now in preparation on altitude instruments and therefore will not be given here. It is necessary, however, to define briefly the various errors and to include some data.

68°F

Scale error is the amount by which the instrument at a temperature of +20°C. fails to indicate the altitude in the standard atmosphere when subjected to the pressure corresponding to this altitude. It is a measure of the accuracy with which the mechanism of the instrument has been adjusted to indicate altitude in accordance with the standard altitude-pressure relation. The test is ordinarily made with the markers of the altimeter set to zero or the pressure scale to 760 mm (29.92 inches) of mercury. The scale errors for small deviations from these settings (1,000 feet) do not differ substantially.

The scale errors of a representative instrument are given in figure 6, in which curve A shows the errors while the instrument was subjected to decreasing pressures, and curve B, the errors for pressures increasing back to atmospheric.

The results of three scale error tests made on successive days on an altimeter in the altitude range -1,000 to +400 feet are shown in figure 7. It is seen that the deviation of the individual errors from the best curve through all of the points does not exceed 15 feet. This value is representative of average acceptable instruments.

Temperature errors are changes in the indication of the instrument due solely to changes in instrument temperature. These are mainly due to the effect of temperature on the elastic moduli of the pressure element. Altimeters are usually compensated for the effect of temperature at zero altitude. For use in landing, the temperature error at the landing level should be relatively small, which is not necessarily the case when compensated only at zero altitude. It should be noted that altimeters have been constructed which have been compensated for the effect of temperature, not only at zero altitude, but at all altitudes in the range of indication.

The scale errors at a number of temperatures are given in table I for an instrument typical of the performance of those now available and for an earlier model with complete temperature compensation. It is seen that the differences in error at all altitudes is, on the whole, much less for the instrument with complete temperature compensation but that the temperature compensation at zero altitude is better for the typical instrument.

TABLE I

Scale Errors of Two Sensitive Altimeters at Various Temperatures

Reading feet	Typical instrument				Temperature compensated altimeter	
	Scale error in feet at					
	45°C.	26°C.	-15°C.	-35°C.	24°C.	-35°C.
0	+24	+4	+16	0	-15	+25
5,000	0	-24	-40	-48	-50	+30
10,000	+47	+22	-40	-84	-80	+10
15,000	+148	+99	-22	-72	-100	+5
20,000	+268	+180	-16	-88	-10	+85
25,000	+424	+308	+56	-60	-	-

Hysteresis and after effect.- When the scale errors for both altitude increasing and altitude decreasing are plotted against altitude, the difference in error given by the two curves at a given altitude is defined as the hysteresis, or perhaps more correctly, the lag of an altimeter. This difference at zero altitude, or for all practical purposes at atmospheric pressure, is usually called the after effect. The after effect in good instruments practically disappears after the instrument has been rested for 12 to 24 hours.

At 10,000 feet the hysteresis of the instrument for which the scale errors are given in figure 6 is 30 feet, which is the gap between the curves A and B. Similarly the after effect (at an altitude of 300 feet) is 40 feet. Ordinarily the difference in the scale corrections given by curves such as A and B is a maximum at about the middle altitude and for most instruments slightly exceeds that for curves A and B.

Drift and recovery.- It is well known that the deflection of instruments depending upon an elastic system changes with time. In the case of altimeters this change is evaluated by subjecting them to a definite change in pressure and observing the subsequent indications. The increase in indication after the first reading, which is taken as soon as possible after the pressure change has been completed, is usually known as the drift. When the instrument is again subjected to the original pressure after the drift has been obtained, drift again occurs which for convenience is called recovery. A definite time elapses before the instrument again indicates the original reading.

Drift curves are shown for two different altimeters in figures 8 and 9. In obtaining the data in figure 8 the altimeter was subjected to a decrease in pressure from 756 to 524 millimeters of mercury (9,800 feet) in 35 seconds. After 1-1/2 minutes and at subsequent intervals of time, the altimeter and a mercurial barometer, the latter measuring the pressure to which the altimeter was being subjected, were read. The change in the reading of the altimeter is plotted as the drift, zero time being taken as the instant at which the pressure reduction was completed.

The data in figure 9 were obtained similarly except that the pressure was reduced from 768 to 430 millimeters of mercury (15,300 feet) in 30 seconds, and the first reading was obtained 2-1/2 minutes after the pressure reduction was completed. In both figures the drift is given both in feet and in equivalent pressure units.

It is obvious that the drift commences at the instant the pressure change commences and that a great deal of drift has occurred in the time interval between the instant at which the pressure reduction ceased and the first reading was taken. The drift is most rapid initially.

Recovery curves are also shown in figures 8 and 9. The recovery is obtained from readings taken at the conclusion of the drift test and after the instruments are again subjected to atmospheric pressure. The altimeter and mercurial barometer are read at intervals of time immediately following the increase to atmospheric pressure. The change in reading subsequent to the first reading is called the recovery. In general, after the drift test, altimeters read higher at a given pressure and gradually approach their original reading. The recovery may be said to be complete when the altimeter regains its original reading. The difference between the error at complete

recovery and the recovery at a given instant of time is often called the after effect. Although the experimental procedure appears to be different, the after effect following drift and that following a scale-error test are caused by the same property of the elastic system; namely, that a deformation depends upon time as well as the load.

In obtaining the recovery curve shown in figure 8, the pressure was increased after the one hour-drift test from 530 to 755 millimeters of mercury in about 20 seconds. The first reading was taken one minute later and is plotted as zero recovery at the time of one minute. The subsequent changes in the reading of the altimeter are plotted as the recovery. A reading taken 17 hours later showed the recovery to be complete, that is, the reading of the instrument was then the same as before the drift test, after correcting for the difference in air pressure.

The recovery curve shown in figure 9 was obtained similarly, except that the pressure was increased from 430 to 766 millimeters of mercury in about 10 seconds and the first reading obtained 50 seconds after the increase in pressure was complete. After 16 hours the instrument had failed to return to its reading before the drift test by 18 feet. This failure to regain the original reading is not a time effect, but probably due to a mechanical imperfection.

It has been shown by a number of investigators that if the drift has continued until the drift-time curve is practically asymptotic, the recovery and drift curves are practically identical if the drift and recovery are expressed in terms of pressure units rather than altitude units. The relation is evident, in a measure, by inspection of figures 8 and 9, but experimental difficulties prevent observations at the precise instant at which drift and recovery commence, so that the direct comparison is measurably imperfect. The equivalence of drift and recovery is of value in estimating the amount of recovery at ground level which will occur following a flight of some hours at a given altitude.

A further aid in estimating recovery is the fact that for the same time duration the ratio of the drift in pressure units to the pressure difference producing it is a constant independent of the pressure difference (or altitude). This statement must be considered as approximate and subject to the errors attendant upon the difficulty with which drift is measured during its commencement.

Vibration and friction.- The instruments are subjected in the laboratory to a circular vibration 1/32 inch in diameter, varying in frequency from 1,000 to 2,000 cycles per minute. The plane of the vibration is 45° from the horizontal. Laboratory tests on the best of the sensitive altimeters have shown that:

(a) The natural frequency of the mechanism as a whole is not between 1,000 and 2,000 c.p.m. The extreme motion of the pointer with reference to the dial varies from 5 to 10 feet in the above frequency range, and is not more than 20 feet in the range from 2,000 to 2,500 c.p.m. Ordinarily if the vibration has a frequency near the natural frequency of the altimeter, readings are difficult to make on account of the excessive amplitude of the pointer vibration, and in addition, the resultant wear and strain in the mechanism usually causes early failure of the instrument.

(b) The change in error at atmospheric pressure for first-class altimeters after vibration for three hours was practically zero.

(c) It was also found that the reading changed from 5 to 10 feet while the instrument was being vibrated.

The above results are not conclusive, because service conditions in general deviate from the test conditions.

Friction, if not excessive, causes little error or uncertainty in the reading of sensitive altimeters if they are subjected to a vibration with an amplitude of at least 0.005 inch, which is ordinarily present under service conditions. When the amplitude of vibration is less, as may be the case on instrument boards when the engine is throttled down, the error due to friction is usually excessive.

The friction is measured during a scale-error test by noting the difference in reading at various points on the scale before and after tapping or vibrating the instrument lightly. Differences greater than 60 feet are excessive.

Secular errors.- It has been found that the error at atmospheric pressure, that is zero altitude, changes with time and further, tests show that the entire scale-error curve is shifted by the amount of the change. This progressive change in error has been called the secular error or zero shift. It is in the main caused by a combination

of the release of internal stresses and a drift in the diaphragm capsules, and can be avoided in large part by artificial seasoning and heat treatment. Short-time tests on sensitive altimeters during which they were subjected to atmospheric pressure only showed a progressive change in the scale errors of the order of 10 feet in 100 days. The deviation of individual observations from the smoothed curve was ±10 feet. The deviations from the curve for a few days following scale-error tests were much greater, roughly +20 feet. The secular error is such that for most altimeters the reading at a given pressure decreases with time.

Position error.- This error is the change in reading due to the effect of statically unbalanced parts when the instrument is oriented about its principal horizontal axes. The maximum change in reading between any two positions for a well-balanced instrument does not exceed 5 to 10 feet.

Installation error.- The instrument case must be connected to a static head such as that of the pitot-static tube, in order to eliminate the effect of variations in the air pressure in the cockpit.

Lag in reading.- At high rates of climb or descent an appreciable time lag in indication may occur due to a difference between the pressure within the case of the indicator and that at the static tube. This difference in pressure or lag ΔP, is given by

$$\Delta P = \lambda R \tag{1}$$

where λ is the lag constant in seconds, and R is the rate of change of pressure per second of the atmospheric pressure. The lag constant λ varies with the particular installation and can be computed by the formula:

$$\lambda = \frac{8 \mu l C}{\pi r^4 P} \tag{2}$$

where μ is the coefficient of viscosity of air (173×10^{-6} poises at 0°C.).

l is the length in centimeters of the line connecting the static tube with the indicator.

C is the volume in cubic centimeters of the air chamber, that is of all of the indicator cases, altimeters, and air-speed indicators, connected to the static tube. (226 cc for sensitive altimeter cases and 157 cc for air-speed indicator cases).

r is the radius of the bore in centimeters of the connecting line (0.147 cm for 3/16-inch line and 0.225 cm for 1/4-inch line).

P is the atmospheric pressure in dynes per square centimeter (assumed 25 inches of mercury or 0.84×10^6 dynes per square centimeter).

With these units, λ is obtained in seconds.

The constant λ can be directly measured for a particular installation, consisting of one or more instruments, by a simple method. It is the time required for the pressure (not speed) difference to become 1/e or 37 percent of the initial pressure difference. The case and lines must be leaktight. A suction is applied to the static tube sufficient to deflect the pointer of an air-speed indicator, if it is part of the installation, to 100 miles per hour or knots. The static tube is suddenly opened to the atmosphere and the time interval observed for the pointer to change its reading from 100 to 61 miles per hour or knots. This time is the lag constant.

If the lag constant is small, the time may be measured for the speed to fall from 100 to 37 miles per hour or knots, in which case the lag constant is one half of the observed time. The latter is the time required for the pressure difference to become $1/e^2$ or 13.5 percent of its initial value.

If no air-speed indicator forms part of the installation, apply a suction to the static tube sufficient to change the altimeter reading 2,000 feet and then suddenly release the suction. The lag constant is the time for the reading to decrease 1,280 feet or to a reading of 720 feet. One half of the time for a decrease of 1,740 feet (reading of 260 feet) also equals the lag constant.

For an error due to lag equal to 10 feet at an altitude of 5,000 feet, ΔP is found to equal approximately

0.15 inch of water. Values of the lag constant for this value of ΔP for various rates of climb and descent, computed by equation (1), are given in table II. The maximum lengths of tubing which can be used, as computed by equation (2) and verified experimentally, based on the above values of the lag constant and the values of the constants pertaining to the installed instruments, are also given in table II. At altitudes below 5,000 feet the lag in indication will be less than 10 feet and above 5,000 feet greater, for the given lengths of line. For lags in excess of 10 feet, the length of line will be proportionally longer.

TABLE II

Static Pressure Lag

Maximum length of line which can be used if the lag due to climb or descent is not to exceed 10 feet at an altitude of 5,000 feet.

Instruments	Rate of climb or descent ft./min. at 5000 feet	Lag constant seconds	Length of 3/16-inch line feet	Length of 1/4-inch line feet
1 altimeter	500	1.32	135	740
do.	1000	.66	67.5	370
do.	2000	.33	34.0	185
do.	5000	.13	13.5	75
1 air-speed indicator 1 altimeter	500	1.32	79	408
do.	1000	.66	39.5	204
do.	2000	.33	20.0	102
do.	5000	.13	7.9	41
2 air-speed indicators 2 altimeters	500	1.32	39.5	204
do.	1000	.66	19.5	102
do.	2000	.33	9.8	51
do.	5000	.13	4.0	20.5
3 air-speed indicators 3 altimeters	500	1.32	26	144
do.	1000	.66	13	72
do.	2000	.33	6.5	36
do.	5000	.13	2.6	14.5

Volume of sensitive altimeter assumed 226 cc; of air-speed indicator, 157 cc.

Accuracy in Measuring Altitude

The instrumental errors of an altimeter when used to measure the altitude of the aircraft above the earth's surface in a cross-country flight, are as follows:

(a) Scale errors.
(b) Friction and vibration errors.
(c) Secular errors.
(d) Position errors.
(e) Temperature errors.
(f) Drift.
(g) Hysteresis.

In addition to the instrumental errors, the accuracy is affected by the following more serious errors inherent in the barometric method.

(h) Deviation of the temperature of the air column from that assumed in the standard atmosphere.

(k) Change in the atmospheric pressure at the reference level or base.

(m) Variations in the elevation of the surface of the earth.

It will be seen that the errors (a) to (d) inclusive are readily determinable for each instrument, and that corrections for these errors can easily be applied in flight. Of the remaining errors, the temperature error (e) is indeterminate owing to the added inconvenience of measuring the temperature of the instrument, but the construction of instruments compensated for temperature at all altitudes offers no practical difficulties other than that of increased cost. The drift and hysteresis effects (f) and (g) are indeterminate since they both depend on time and the previous elastic history of the instrument.

The errors (h), (k), and (m) can be eliminated only by obtaining information from the ground. To correct for error (h) requires a knowledge of the temperature of the air column and the computation of a correction to be applied to the altitude obtained after correcting the altimeter reading for instrumental errors. To correct for error (k) requires a knowledge of the barometric pressure at the reference level at the position immediately below the airplane and the consequent readjustment of the dial of the

altimeter, or its equivalent, to indicate zero at this reference level. It is obvious that a knowledge of the elevation above sea level of the earth's surface immediately beneath the aircraft is required to correct for error (m).

The magnitude of the instrumental errors can be evaluated with considerable precision for particular cases when using a first-class instrument. Thus, assuming the instrument in a rested condition for at least 12 hours, the errors in the indication will be about as given in table III for a flight from 5 to 10 hours, at either 5,000, 10,000, or 15,000 feet. The magnitudes of errors inherent in the barometric method, (h), (k), and (m) are also given in table III. It is seen that corrections must be applied for the latter errors if a performance consistent with the smaller instrumental errors is to be realized.

TABLE III

Errors in Indication of Altimeter in Cross-Country Flight

	Description	Error in feet
(a)	Scale errors, up to	±50
(b)	Friction and vibration errors, up to . . .	±15
(c)	Secular errors in 50 days	-10
(d)	Position error, up to	±10
(e)	Temperature error, feet per °C., up to . .	±2
(f)	Drift in 5 hours at 5,000 feet	+25
	" 10,000 "	+50
	" 15,000 "	+75
(g)	Hysteresis, not exceeding	+50
	Hysteresis, for small deviations from a given altitude	10
(h)	Correction for deviation at start of flight from standard temperature of the air column, up to 10 percent of the indicated altitude. Error due to change in temperature of air column during flight of about 5 hours, up to about 4 percent of the indicated altitude.	

(k) Effect of change in atmospheric pressure in flight of 5 hours:

In winter, up to	±1,000
In summer, up to	±300

(m) Errors due to changes in elevation of earth's surface are extremely variable.

Consider now the case when corrections are applied for the errors as presented in table III. The residual of errors (a), (b), (c), and (d) as a whole will be about ±10 feet, and is unlikely to be as much as ±20 feet. Assuming that a rough estimate (within 10°C.) of the average temperature of the instrument during flight be made while on the ground and a correction based on this be applied, the residual uncertainty in the temperature error (e) will be about ±20 feet. The exact correction to be applied for the drift and hysteresis, (f) and (g), cannot be easily determined. Since most of the drift at a given indication occurs within the first half-hour, an approximate correction can be applied on this basis. Hysteresis will be avoided by not flying much above the average altitude at which the flight is to be made. This procedure should reduce the uncertainty due to both drift and hysteresis to about 20, 30, and 50 feet at 5,000, 10,000, and 15,000 feet, respectively.

When the altimeter is adjusted for the change in air pressure at the ground level, the residual uncertainty in the error listed as (k), should not exceed ±20 feet under favorable weather conditions, and with proper equipment for securing the data.

When the approximate method of determining the mean temperature of the air column is used in finding the temperature correction (h), the uncertainty in the corrected altitude ordinarily does not exceed one percent of the altitude, but may be as much as four percent. It should be emphasized that this error is proportional to the altitude in contrast to the fact that many of the other errors are independent of altitude.

A correction cannot be applied for the deviation of the mean temperature of the air column (h), in table III, unless the temperature of the air at the ground level below the airplane is known. In flights reasonably close to the base, knowledge of the air temperature at this point

will be sufficient, in which case the residual uncertainty due to the change in temperature is practically zero. However, the uncertainty in the temperature correction considered in the preceding paragraph still remains.

Summarizing, after applying all corrections, the overall uncertainty in the altitude due to instrumental errors may be as much as about 50 feet in a flight at 10,000 feet for 5 to 10 hours. This means that flight at a definite pressure level can be maintained with errors not exceeding 0.5 percent. When corrections are also applied for the remaining errors, which are listed as (h) and (k) in table III, there remains an average uncertainty of about one percent in the true altitude above the base or reference level. To this must be added whatever uncertainty exists in error (m).

Performance in Flying Level

When poor visibility or fog is encountered, the airplane is flown level mainly for the purpose of maintaining the normal flying attitude. The actual value of the altitude is not required with an accuracy greater than the instrumental errors which, therefore, can be neglected. The other errors may have to be considered.

The error caused by variation of the air pressure at the reference level can be corrected in flight by shifting the zero of the instrument, but information as to its value must be received from a ground station.

A rough calculation on the ground before the flight will give, with sufficient accuracy, the correction for the effect of the deviation of the air temperature from that assumed in the standard atmosphere. The indicated flying altitude should be such as to include this correction and also as to be at an altitude high enough to clear the ground at all points of the course.

Pitching of the airplane is measured in terms of change from the chosen altitude which is indicated by a sensitive altimeter with a sensitivity of at least 10 feet, or perhaps 5 feet.

Use of Sensitive Altimeter in Landing

The factors affecting the accuracy of the indication of an altimeter in landing are given below:

(a) Scale errors.
(b) Friction and vibration errors.
(c) Secular errors.
(d) Position error.
(e) Temperature errors.
(f) After effect.
(g) It is always necessary to reset the altimeter to correspond with the atmospheric pressure at the ground level of the landing field.

Of these errors it is only necessary to consider (g) the methods and error of resetting the altimeter in flight. The types of adjustment on the altimeter have been considered previously. There are four forms in which data may be given the pilot.

(A) At present it is the practice on many air lines to radio the sea-level pressure to the pilot who then sets the altimeter so that this pressure is indicated upon the pressure dial. Allowing for instrumental errors, the altimeter will indicate altitude above sea level and read upon landing the elevation of the landing field above sea level. To be of use, it is obvious that the pilot must know the elevation above sea level of the landing field.

The reduction to sea level must in general be made by using the standard atmosphere to which the altimeter is calibrated, in contrast to the method used in determining the sea-level pressure for meteorological purposes. The difference in the two sea-level pressures, one obtained for meteorological use and the other for resetting the altimeter, is very marked at mountain or plateau stations. Even at low-elevation stations the difference in method of reduction may give significant differences in the sea-level pressure. The reduction to sea-level pressure for meteorological purposes involves the use of a mean temperature of the hypothetical air column below the landing-field level to sea level which varies with the observed air temperature, and in high-elevation stations, involves the application of a "station" correction.

To determine the sea-level pressure for resetting the altimeter, the atmospheric pressure at the landing-field level is measured and the elevation of the landing field must be known. The altitude of the landing field is subtracted from the altitude in the standard atmosphere (reference 14) corresponding to the atmospheric pressure. The pressure in the standard atmosphere corresponding to this

difference in altitude is the sea-level pressure. In the method now used on some air lines, a sensitive altimeter with a pressure scale (fig. 5) is installed on the ground at the landing level. The indication on the pressure scale when the pointers are adjusted to indicate the elevation of the landing field is the desired sea-level pressure, neglecting instrumental errors.

As an example of the method of computing the pressure to be broadcast, assume the elevation above sea level of the landing field to be 4,200 feet and the observed barometric pressure to be 25.34 inches (643.6 millimeters) of mercury. In the standard atmosphere 25.34 inches of mercury is equivalent to 4,525 feet. Subtracting 4,200 feet from 4,525 gives 325 feet. The altitude of 325 feet in the standard atmosphere is equivalent to 29.57 inches (751.1 millimeters) of mercury. The latter pressure is broadcast. If the sensitive altimeter is used on the ground, its altitude indication is set to 4,200 feet, whereupon the pressure reading should be 29.57 inches of mercury.

(B) The air pressure at the landing-field level may be broadcast to the pilot.

In this case the aircraft altimeter is set so that the pressure dial indicates this pressure. Altitudes above the landing-field level are then indicated and a zero indication is obtained upon landing, if the instrumental errors are allowed for. As in the previous case this procedure has the possibility of confusion with the sea-level pressures which may be broadcast.

Referring to the example considered in case (A), the observed barometric pressure, 25.34 inches of mercury, is broadcast.

(C) Two alternative procedures in which altitude, instead of air pressure, is broadcast are believed to be more convenient. In the first of these the altitude corresponding to the sea-level pressure is broadcast.

The markers of the altimeter are set to the broadcast altitude whereupon altitudes above sea level are indicated and upon landing the altimeter will indicate the elevation above sea level of the landing field. Obviously this elevation must be known to the pilot if the resetting is to be of any value.

As an example, assume the elevation and sea-level pressure given in case (A). As before, 25.34 inches of mercury is equivalent to 4,525 feet in the standard atmosphere. Subtracting 4,200 feet, the landing-field elevation, from 4,525 feet gives 325 feet, the altitude which is to be broadcast. It should be emphasized that the altitude should not be that corresponding to the sea-level pressure determined for meteorological purposes.

(D) In the second procedure the altitude in the standard atmosphere corresponding to the air pressure at the landing level is broadcast.

The markers of the altimeter are set to this altitude following which altitudes above the landing field are indicated and a zero indication is obtained upon landing.

If, as before assumed, the barometric pressure at the landing level is 25.34 inches of mercury, the altitude broadcasted is 4,525 feet.

It is understood that pilots on air lines prefer the indication of altitude above sea level obtained as outlined under (A) and (C) since the altimeter indication is used not only in landing but also to clear mountains and hills enroute. The equipment is available on air lines only for using broadcasts in accordance with procedure (A) (or (B)) while the altimeters for the air services are designed only for procedure (C) (or (D)).

From many points of view the mercurial barometer is unsatisfactory for measuring the pressure to be used in setting altimeters just before landing. The Fortin type barometer requires considerable time to read; all barometers require the application of a number of corrections which, however, can be grouped into one table for use at any one station; uncertainty exists as to the degree of vacuum above the mercury column; and the mercury in the cistern and often in the tube, gets dirty with time, leading to additional error. Designs of mercurial barometers eliminating some of these uncertainties and difficulties are available, but at rather high cost.

An aneroid barometer offers considerable possibilities for use at airports. The scale can be calibrated in altitude units if altitude is to be broadcast, in which case it will not differ essentially from the airplane altimeter. The dial in either case should be fixed to the case. The

pointer can be set once for all so that the indications at any given station are sea-level pressure or the equivalent altitude, or landing-field pressure or the equivalent altitude. The instrument is simple to read and should be of such quality that the application of one correction only is required, that for scale error. Unfortunately, the instruments now available including the sensitive altimeter, have a zero shift with time, or secular error, which requires that they be checked from time to time against a standard mercurial barometer. This shift can be practically eliminated by the instrument maker since it has been done in isolated instances. Applying the principles of design used in the sensitive altimeter but substantially reducing the sensitivity, which can be done without sacrifice of accuracy, should lead to a successful development.

The amounts of these errors for the best quality instruments now available are given in table IV. It is assumed in (g) that the altimeter has been reset.

TABLE IV

Errors in Indication of Altimeter in Landing

	Description	Error in feet
(a)	Scale error at zero altitude, up to . . .	±30
(b)	Friction and vibration, errors, up to . . .	±15
(c)	Secular error in 50 days	-10
(d)	Position error, up to	±10
(e)	Temperature error, feet per °C., up to	0.8
(f)	After effect after 5 hours at 3,000 feet	+15
	" 5,000 "	+25
	" 10,000 "	+50
(g)	Resetting uncertainty	±20

For a particular altimeter and definite conditions of flight, these errors can be evaluated as a single over-all error by a relatively simple flight test. This consists simply in reading the altimeter when landing and comparing this reading after a flight which is at the altitude and

of the length for which the correction is desired, with data on the air pressure at the ground level, or its corresponding standard altitude. The difference is the total correction to be applied.

The importance of testing the altimeter in this way should be emphasized. If an instrument is repeatedly checked in good weather, a good average value of its errors, or more exactly, dependable data on the accuracy of the method, will be obtained. Such tests give the pilot confidence when the altimeter must be relied upon.

It is estimated that the residual error in the altitude reading at landing will not exceed 40 feet if the altimeter correction to be applied is determined by flight tests as just described. This assumes an instrument in the airplane with an even better performance than that given in table IV, and considerable improvement in the ground technique and equipment. The scale errors must be uniform over an appreciable altitude interval near zero altitude and the temperature errors smaller.

The over-all error can also be determined in the laboratory by subjecting the instrument as nearly as possible to flight conditions. The uncertainty is greater than in flight tests owing to the difficulty in reproducing flight conditions.

It is evident that the over-all error will vary in amount (a) (table IV) due to lack of uniformity of the scale error in the altitude interval in which landings may be made (see fig. 6), (c) due to the secular error, (e) due to variation in the instrument temperature, (f) due to variation in the after effect, and (g) due to friction. Not all of these variations are appreciable. Thus, the instruments can be made with constant scale errors in the desired altitude range and are now very closely compensated for temperature at zero altitude. Further, the secular error should merely require the test to be repeated at intervals of 30 to 50 days. This leaves the after effect and friction effect to be considered. Their amount is dependent upon both the duration and altitude of the flight. However, comparatively large variations in both duration and altitude cause small changes in the after effect. On commercial flights between two points the altitude and duration ordinarily change so little that the after effect is practically constant. The lack of vibration of the instrument as the engine is throttled down just before land-

ing may require that the instrument be tapped in order to eliminate the effect of friction.

An important point to note is that the mercurial barometers used in obtaining the data for resetting the altimeter, require standardizing. The resetting error given in table IV is largely due to differences in the results which were obtained from a comparison of six of these instruments, four of which were at airports.

RATE-OF-CLIMB INDICATOR

The rate-of-climb indicator is actuated during a climb or descent by the differential pressure obtained in a volume which is connected to the atmosphere through a capillary tube. A common design is shown schematically in figure 10. The air chamber consists of the internal volume of the Dewar flask A and the interior of the diaphragm capsule D. This is connected to the inside of the instrument case, which is maintained at atmospheric pressure by means of vent V, through the capillary tube CT. The differential pressure developed in a climb or descent causes a deflection of the sensitive diaphragm capsule D which is transmitted to the pointer P by a multiplying mechanism, as shown schematically.

When the air pressure is changing, pressure in the air chamber lags behind that in the instrument case due to the restriction interposed by the capillary tube. This differential pressure P is in terms of rate-of-climb V in an isothermal standard atmosphere:

$$P = K V \tag{3}$$

K is a constant depending upon the length and diameter of the capillary tube, upon the volume of the air chamber, and also upon the temperature at which the instrument is calibrated. The United States standard atmosphere to which altimeters are calibrated, is not used because the rate of-climb in this atmosphere for a given differential pressure depends also upon the altitude.

The capillary leak rate-of-climb indicator cannot be used quantitatively because, briefly, the indications depend to an important extent upon the temperature of the

air chamber and capillary tube, and upon deviations of the temperature of the free air from that assumed in the original calibration. The errors due to these sources are of minor importance when the instrument is used to fly level.

Time lag.- In addition to the lag in indication due to the inertia of the parts, a lag occurs due to the fact that time is required at a constant rate of climb for the rate of flow of air through the capillary tube, and therefore the differential pressure, to come to a constant value. This lag is so large that other sources of lag can be neglected. A constant λ, known as the lag constant, is determined by laboratory tests using the relation

$$\frac{t}{\lambda} = \log_e \frac{V_o - V}{R_t - V} \tag{4}$$

where R_t is the reading of the instrument at time t; V_o and V, respectively, the initial and final rates of climb.

In determining λ experimentally V is most conveniently made zero, and the reading is made at time t equal to λ. For this procedure, equation (4) becomes

$$R_t = \frac{V_o}{e} = \frac{V_o}{2.72} \tag{5}$$

The time t (equal to λ) is measured when the reading R_t has fallen to a value equal to 37 percent of the imposed change in the rate of climb V_o.

In making a test, the instrument is first subjected to a steady rate of climb, which is then reduced to zero by cutting off the vacuum (or pressure) supply to the chamber containing the instrument. A stop watch is started at this moment and stopped when the reading has fallen to 37 percent of its initial value. The elapsed time is equal to the lag constant λ.

The lag constant λ varies inversely with air pressure in accordance with the relation

$$\lambda = \frac{P_o}{P} \lambda_o \tag{6}$$

where P is the atmospheric pressure and P_o and λ_o the

pressure and lag constant at zero altitude. It follows therefore that λ increases with altitude.

The lag constant of representative instruments varies from 4 to 5 seconds at an altitude of 1,000 feet, and is about 10 seconds at 25,000 feet. This value represents the present status of the compromise the instrument maker must make between the differential pressure produced at a given rate of climb and the time lag. Both quantities decrease together but decreasing the differential pressure makes the instrument more delicate and increases the effect of friction. The differential pressures for a rate of climb of 2,000 feet per minute, usually selected as the maximum range, are for present designs about three inches of water.

An inspection of equation (4) shows that it can be used to calculate the time required to obtain a given reading R_t after the imposition of a steady rate of climb V. Such calculations have been made for an instrument with a lag constant of five seconds and the results are given in table V. The time required before a reading of 20 and 40 feet per minute is obtained is given since these readings are roughly the minimum changes in reading which can be detected. The value of 20 feet per minute corresponds to a deflection of the tip of the pointer of 0.05 inch in an instrument with a 2-3/4 inch dial and a range from +2,000 to -2,000 feet per minute.

TABLE V

Time Interval and Change in Altitude to Obtain Minimum Indications of Rate of Climb

Steady rate of climb suddenly imposed ft./min.	Reading of 20 ft./min.		Reading of 40 ft./min.	
	Time required seconds	Change in altitude feet	Time interval t seconds	Change in altitude feet
60	2.0	2.0	5.5	5.5
120	.91	1.8	2.0	4.0
240	.43	1.7	.91	3.7
480	.21	1.7	.43	3.4

The computations show that small deviations from a given altitude are indicated qualitatively for all rates of climb in excess of the least reading.

Effect of temperature.- Tests show that the change in indication with change in instrument temperature is about 0.2 percent per degree Centigrade. The rate of change of instrument temperature is kept low by use of the vacuum bottle. Ordinarily when using the rate-of-climb indicator to fly level, the effect of instrument temperature may be neglected.

Bureau of Standards,
Washington, D. C., July 1934.

REFERENCES

1. Solving the Problem of Fog Flying, 1929: The Daniel Guggenheim Fund for the Promotion of Aeronautics, Inc.

Equipment Used in Experiments to Solve the Problem of Fog Flying, 1930: The Daniel Giggenheim Fund for the Promotion of Aeronautics, Inc.

2. Diamond, H., and Dunmore, F. W.: A Radiobeacon and Receiving System for Blind Landing of Aircraft. Bureau of Standards Journal of Research, 1930, p. 897. Research Paper No. 238.

3. Diamond, H.: Performance Tests of Radio System of Landing Aids. Bureau of Standards Journal of Research, 1933, p. 463. Research Paper No. 602.

4. Radio Method of Blind Landing. (Air Corps USA) Popular Aviation, March 1934.

5. Ocker, W. C., and Crane, C. J.: Blind Flying in Theory and Practice, p. 196. Naylor Printing Co., 1932.

6. Schreiber, Ernest: The Behm Acoustic Sounder for Airplanes with Reference to Its Accuracy. T.M. No. 588, N.A.C.A., 1930.

7. Schreiber, E.: Messgenauigkeit des Behmlotes für Flugzeuge bei geringen Flughöhen. DVL Jahrbuch, 1931, p. 591.

8. Rice, Chester: Sonic Altimeter for Aircraft. A.S.M.E. Trans. Aeronautical Engineering, April-June, 1932, p. 61.

9. Laboureur, L.: La Mesure d l'Altitude per le Sondage Acoustique Aerien. Les Cahiers d'Aviation, June 15, 1932.

10. Dubois, R., and Laboureur, L.: Acoustic Sounding on Aircraft and Acoustic Marking of Airports. Association Technique Maritime et Aeronautique, May 1933.

11. Delsasso, J. P.: Jour. Acoustical Society of America, July 1934.

12. Alexanderson, E. F. W.: Height of Airplane above Ground by Radio Echo. Radio Engineering, vol. 9, 1929, p. 34.

13. Green, C. F.: Airplane Flight Aided by Electricity. Electrical Engineering, vol. 50, 1931, p. 654.

14. Hyland, L. A.: True Altitude Meters. Aviation, vol. 25, 1928, p. 1322.

15. Brombacher, W. G.: Tables for Calibrating Altimeters and Computing Altitudes Based on the Standard Atmosphere. T.R. No. 246, N.A.C.A., 1926.

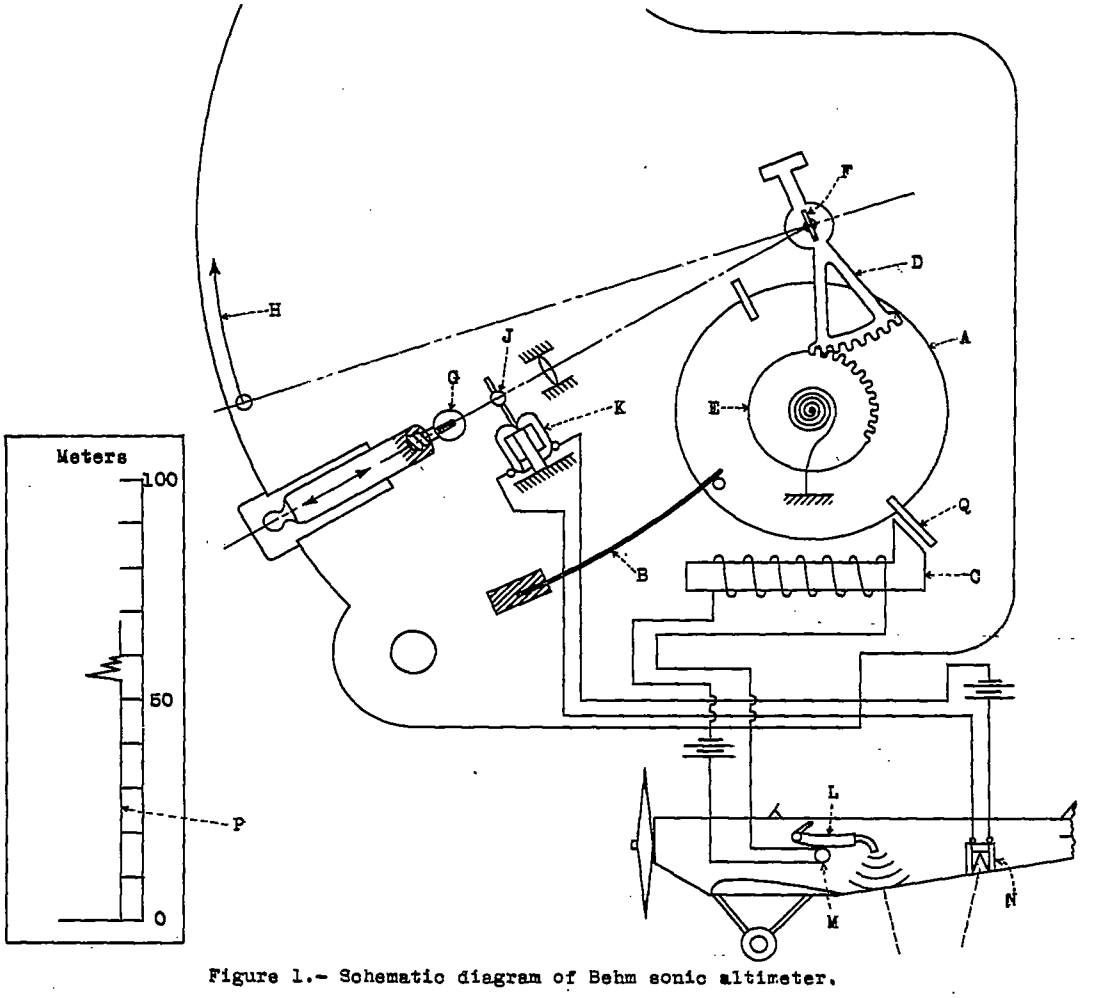

Figure 1.- Schematic diagram of Behm sonic altimeter.

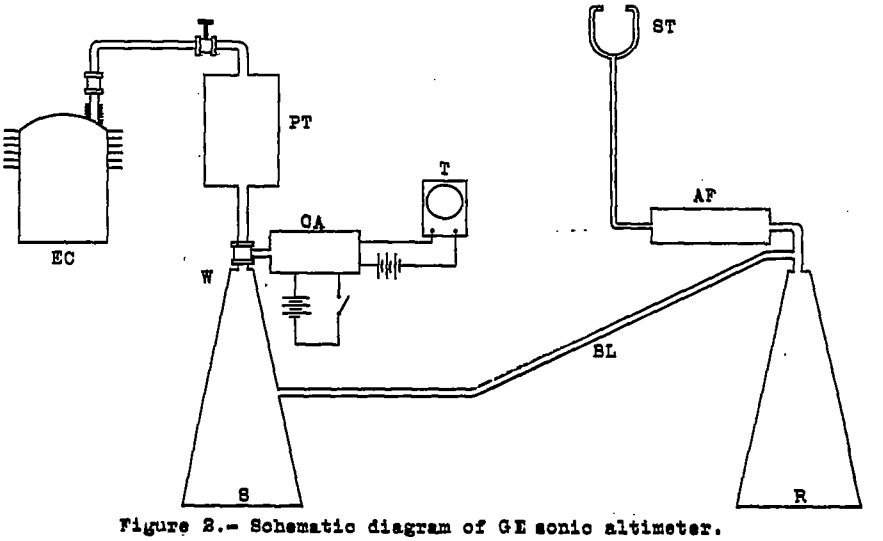

Figure 2.- Schematic diagram of GE sonic altimeter.

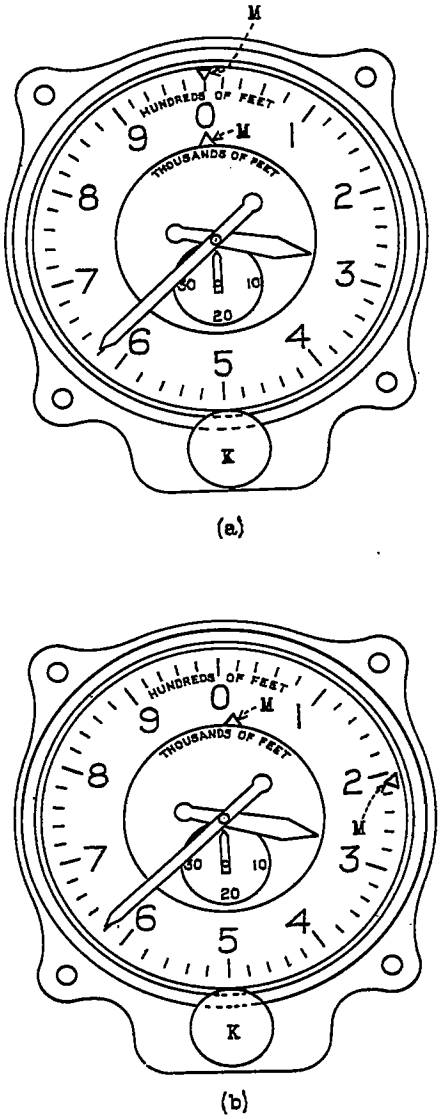

Figure 4.- Dial of sensitive altimeter. Knob K controls adjustment of pointers and markers M.

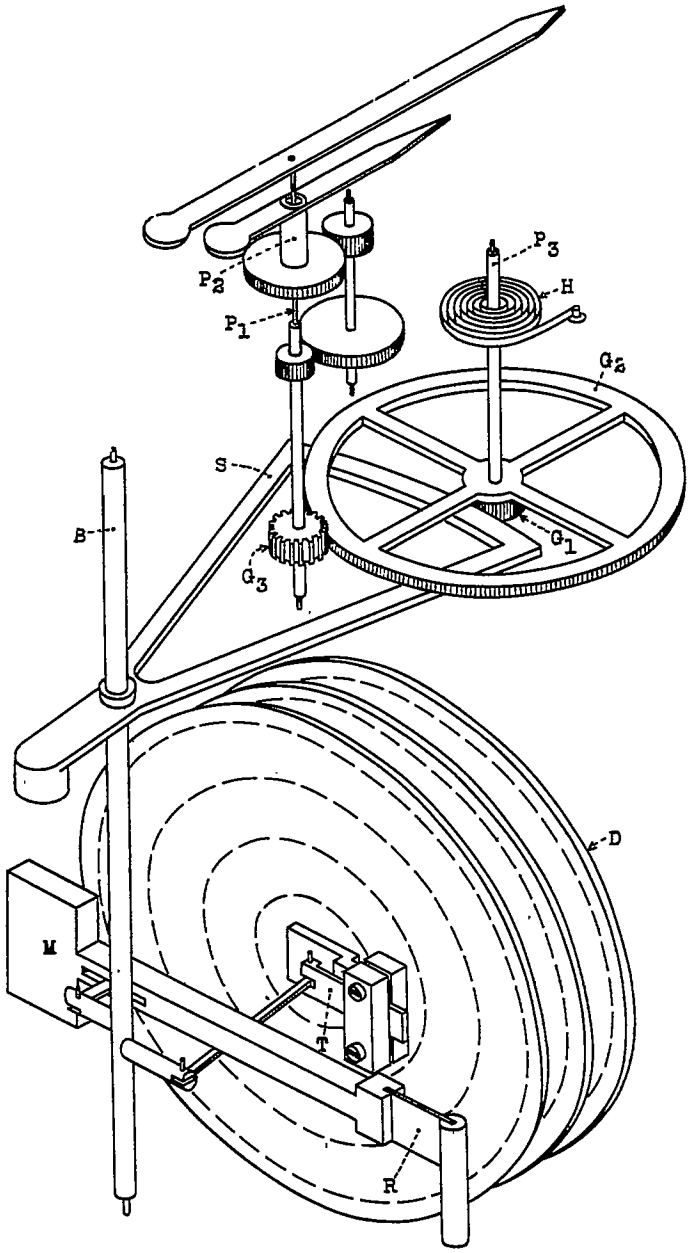

Figure 3.- Diagram of Kollsman sensitive altimeter.

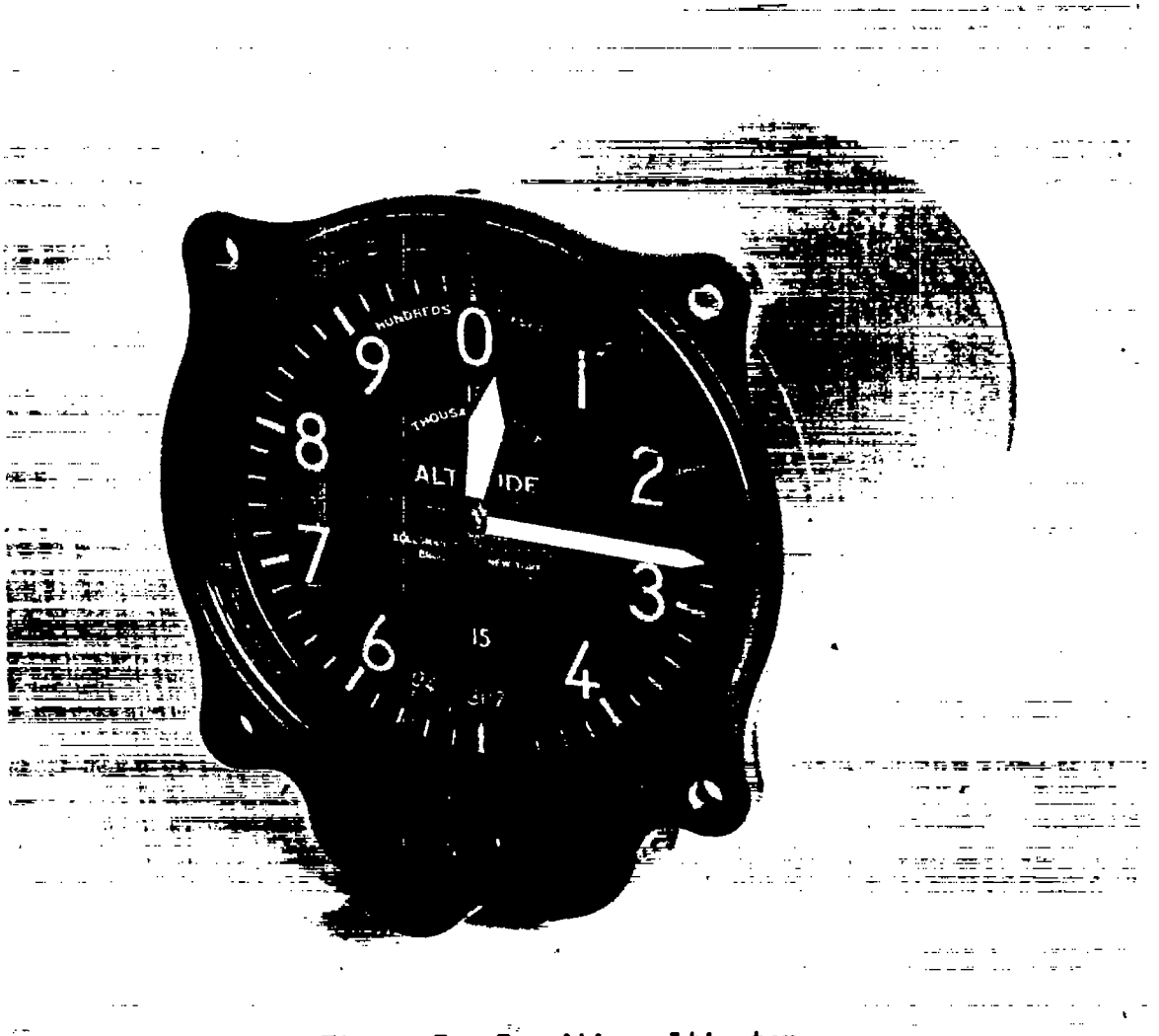

Figure 5.- Sensitive altimeter.

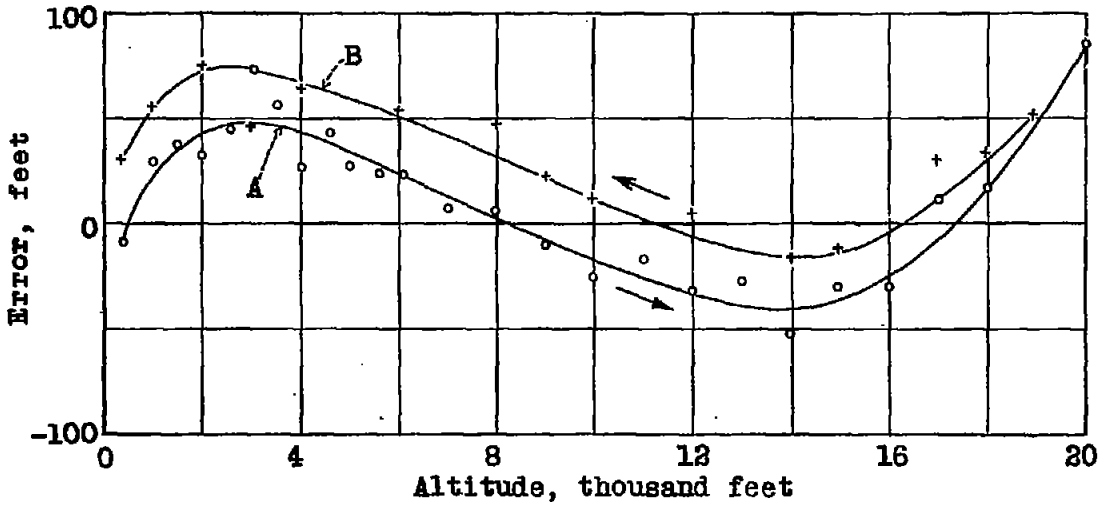

Figure 6.- Results of scale error test on a sensitive altimeter. Curve A is for pressure decreasing and curve B for pressures increasing.

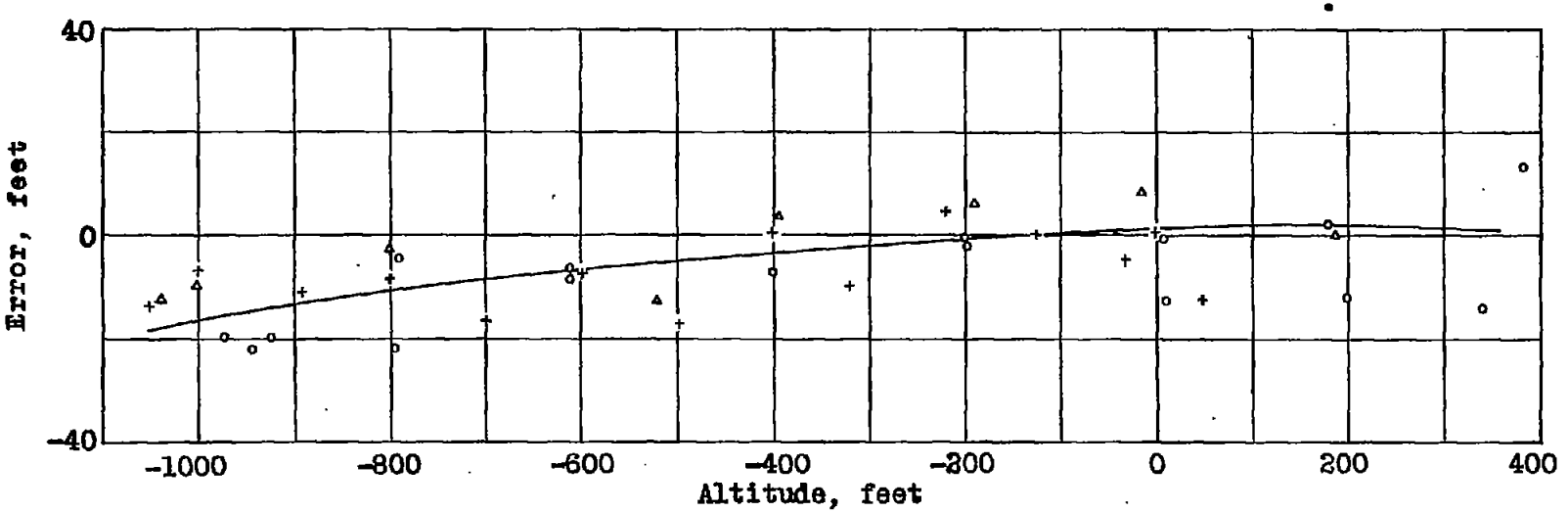

Figure 7.- Results of three scale error tests at a low range of altitude made on successive days.

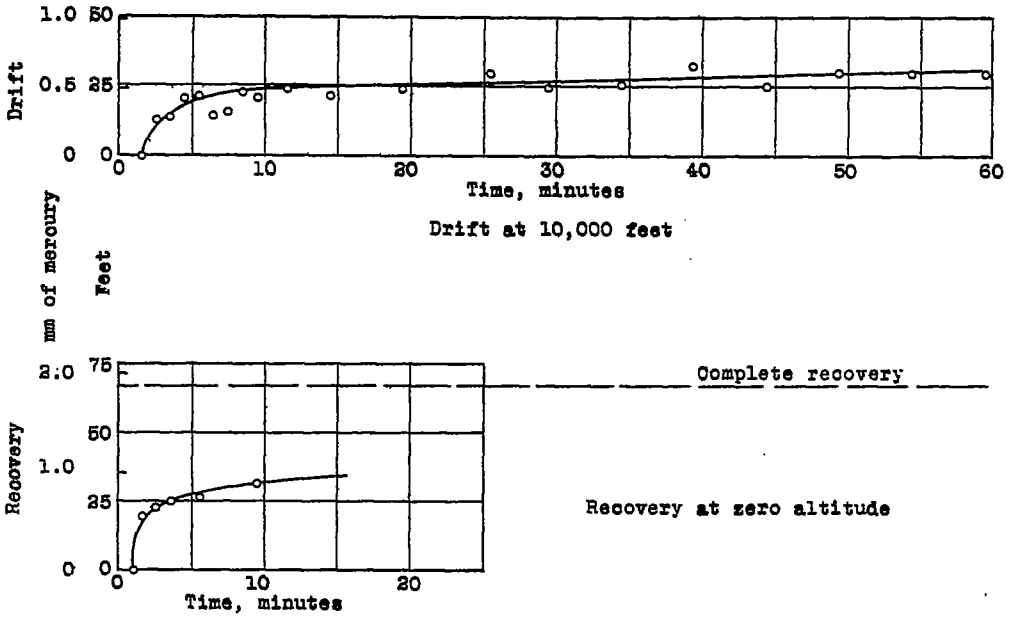

Figure 8.- Drift and recovery curves for a sensitive altimeter.

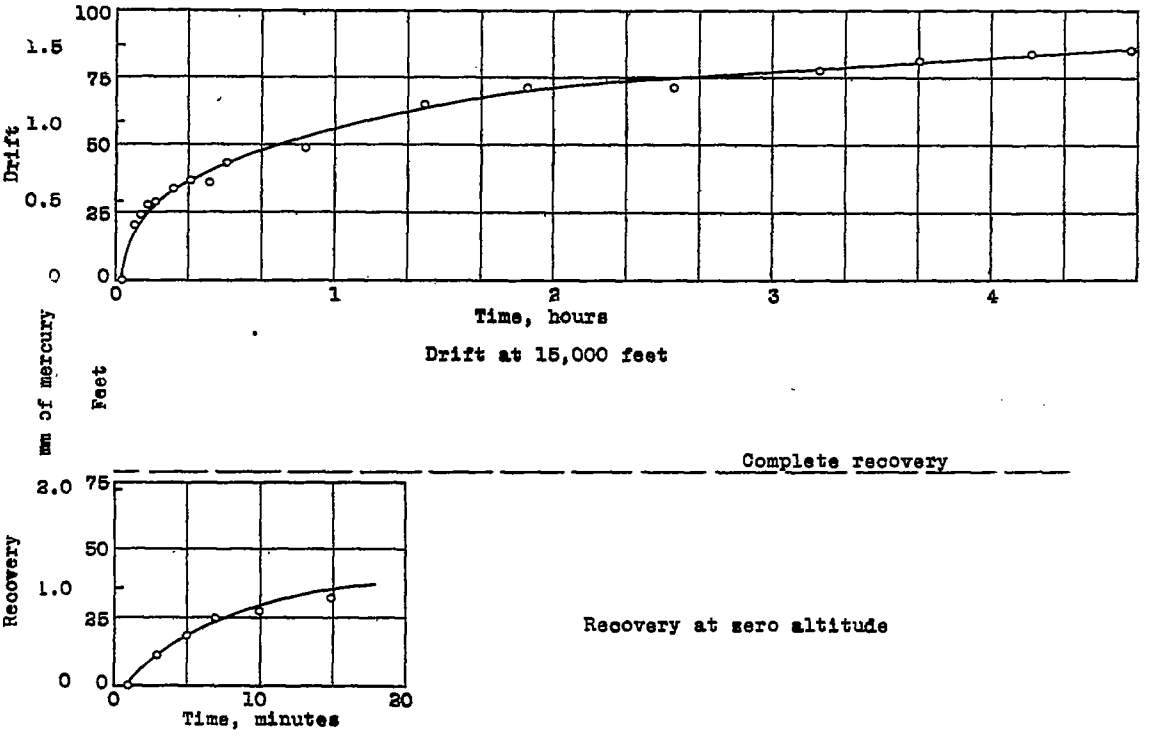

Figure 9.- Drift and recovery curves for a sensitive altimeter.

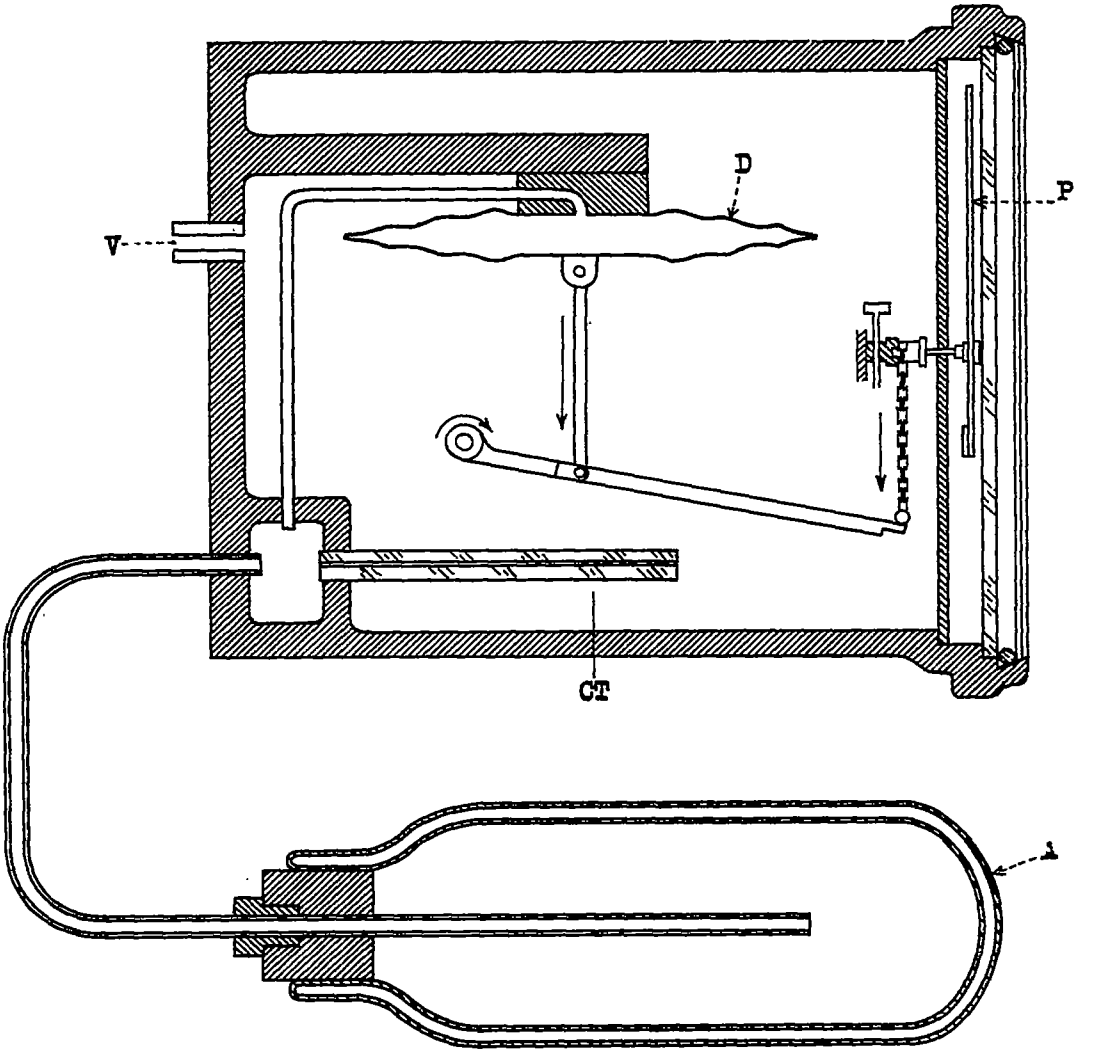

Figure 10.- Diagram of a rate-of-climb indicator.