DEC 14 1934
Library, L. M. A. L.

TECHNICAL NOTES

NATIONAL ADVISORY COMMITTEE FOR AERONAUTICS

No. 513

THE WAVE SUPPRESSORS USED IN THE N.A.C.A. TANK

By Starr Truscott
Langley Memorial Aeronautical Laboratory

To be returned to
the files of the Langley
Memorial Aeronautical
Laboratory.

Washington
December 1934

NASA Technical Library
3 1176 01433 6458

NATIONAL ADVISORY COMMITTEE FOR AERONAUTICS

TECHNICAL NOTE NO. 513

THE WAVE SUPPRESSORS USED IN THE N.A.C.A. TANK.

By Starr Truscott

SUMMARY

So long a time was required for the disturbed water to become quiet after a model had been towed down the N.A.C.A. tank, that only 12 to 18 runs a day could be made. In order to shorten the time lost in waiting between runs, several different methods of suppressing the waves were tried.

The most effective form of wave suppressor developed consists of wooden frames covered with fine copper screening and secured horizontally just beneath the surface of the water at the sides of the tank. With these suppressors placed every 50 feet along the length of the tank, 40 to 60 test runs a day can be made.

INTRODUCTION

The effect of the waves produced by the models on the frequency with which test runs could be made was given very careful consideration in the preparation of the design for the N.A.C.A. tank (reference 1). Side overflow troughs such as are used in the Washington Experimental Model Basin, or in a somewhat different form in the Ottawa tank (reference 2), are most effective wave suppressors because the crests of the waves fall over the overflow edge and are removed. It was not possible to provide such troughs in the N.A.C.A. tank because of the additional cost.

The University of Michigan tank has the side walls coved in from the water line. The cove turns the wave crests back on the waves and is quite successful in damping the waves and reducing the time between runs. It also has an important advantage in that it makes possible a considerable reduction in the weight of the towing carriage because the running rails are placed on the contin-

ous bracket formed by the cove, thus making the carriage narrower. The lighter carriage structure can be accelerated more easily and the weight of the propelling equipment is reduced accordingly.

The saving in weight of towing carriage was thought to be of special value and the coved-in sides were adopted for the N.A.C.A. tank in the hope that they would also prove effective as wave suppressors.

The effect of the coved-in sides on the waves was observed very carefully when making test runs. Although the larger waves were reduced in height quite rapidly, the smaller ones were apparently not affected and it was necessary to wait from 10 to 30 minutes after each run, according to the amount of disturbance that had been produced, before beginning the next run. The average time required to make a run and return the towing carriage is about 7 minutes, but because of the long delay between successive runs, only 12 to 18 test runs could be made in an 8-hour day.

METHODS FOR SUPPRESSING WAVES

The necessity for long waits between runs was a severe limitation on the amount of work that could be done in the N.A.C.A. tank and a search for methods for quickly suppressing the waves was immediately begun. The most promising method seemed to be to dissipate the energy in the waves by causing them to pass through a fine screen and break down into a multitude of small eddies. It appeared that the screens might be fitted vertically or horizontally and might be rigid or flexible and yielding somewhat to the waves.

The first arrangement tried was a doubled sheet of cloth suspended along the side of the tank just under the edge of the overhanging cove. The cloth was held taut by a length of pipe hanging in the bight, and was submerged about two thirds when the water was quiet. (See fig. 1.) This device was unsuccessful; the waves produced by the models struck the vertical cloth and passed through it apparently unaffected. Some slight reduction in amplitude could occasionally be seen, but the desired effect was not obtained.

A horizontal screen floating in the water was next tried. Wooden frames about 8 feet long and 18 inches wide were covered with copper screen made of wire 0.025 inch in diameter, with 12 meshes to the inch. Three of these frames were fastened end to end and secured under the cove where they floated with the screen barely submerged. (See fig. 2.) The waves ran through these frames apparently unaffected and it was concluded that the screen was too coarse in mesh. No finer screen being immediately available, a somewhat loosely woven light cloth was added to the frames to give the effect of a finer mesh screen. This arrangement produced very noticeable reduction in the smaller and shorter waves as they passed through the screens, but the longer waves were very slightly affected. The mobility of the frames permitted them to rise and fall with the longer wave; consequently the water was not forced through the screens and the amplitude of the wave motion was not reduced. The obvious remedy was to secure the frames so that they could not move up or down; the moving water of the waves would be forced to travel a greater distance through the screens and to dissipate a greater quantity of its energy in the eddies excited by the flow through the fine mesh of the screens. The greater the dissipation of energy in the eddies the more complete would be the destruction of the wave motion and the more nearly perfect the suppression of the waves.

Accordingly, the necessary brackets and structure were constructed and the frames were fitted horizontally beneath the cove as before but fixed at such a height that the screen was about 1 inch below the surface of the water (fig. 3). The first installation consisted of a few sets, each made up of three frames secured together, spaced at 100-foot intervals in the middle of the testing length of the tank. This arrangement produced a marked reduction in all waves that ran into it and the number of sets of frames was doubled. The effect of this increase was so pronounced that sufficient additional sets of frames were fitted to permit them to be spaced at 100-foot intervals along the entire length of the tank. The waves were so effectively suppressed that the number of runs per day was trebled and it seemed that all difficulties with waves were ended. This opinion lasted until some tests were made with very heavily loaded models at high speeds when it was found that these models left waves that persisted long enough to produce very irregular resistance records on the succeeding runs. Although runs could be made as frequently, the accuracy of the readings obtained was not as good as was desired.

The obvious remedy for this condition was the addition of more frames and accordingly the number was again doubled and the sets of frames are now spaced at 50-foot intervals.

CONSTRUCTION OF THE WAVE SUPPRESSORS

As will be seen in figures 3 and 4, the unit is a simple wooden frame 8 feet long and 21-1/8 inches wide to which is secured by copper tacks an 18-inch-wide strip of copper screen made of 0.013-inch-diameter wire and with 30 meshes to the inch. Three frames are held together to form a set by hooks made of flat copper 1/8 inch thick. Each set is held fixed in position beneath the cove by four struts, made of steel tubing and a small angle, that extend down from clamps secured to four of the chairs supporting the rail. The 1 by 1 inch angle at the bottom of each strut is secured to the 1-3/4 by 2-3/4 inch pine cross bar on the frame by screws, the steel parts are given two coats of asphaltum varnish to a point about 1 foot above the water line. The cross bar keeps the steel parts out of the salt water with which the tank is filled and thus prevents electrolytic action between the copper screen and the steel.

The position of the wave suppressors in the water does not seem to be critical. The screens were first tried about 1 inch below the water surface and the damping of the waves was very pronounced. The distance below the water level decreased slowly as the water level fell because of evaporation and leakage from the tank. The drop in level takes place at the rate of about 1 inch per month and the effect of the change in level was observed over the whole period. Apparently the waves were suppressed as effectively with the screens at the water surface as with them 1 inch below. Any difference was so small as to be negligible for practical purposes.

The final installation of wave suppressors is as just described. It has been found that the waves produced by towing a model are reduced so quickly that another test run may usually be begun within a minute or two after the carriage returns from completing the previous one. Before the wave suppressors were installed it was possible to make a maximum of from 12 to 18 test runs a day. Since they have been in use it has been possible to make 40 test

runs a day with ease and, if necessary, 60 test runs can be made in 8 hours.

Langley Memorial Aeronautical Laboratory,
National Advisory Committee for Aeronautics,
Langley Field, Va., November 5, 1934.

REFERENCES

1. Truscott, Starr: The N.A.C.A. Tank - A High-Speed Towing Basin for Testing Models of Seaplane Floats. T.R. No. 470, N.A.C.A., 1933.

2. Green, J. J., Klein, G. J., and Tupper, K. F.: Aeronautical Research in Canada. Paper presented at A.S.M.E. meeting in Buffalo, N. Y., June 6-8, 1932.

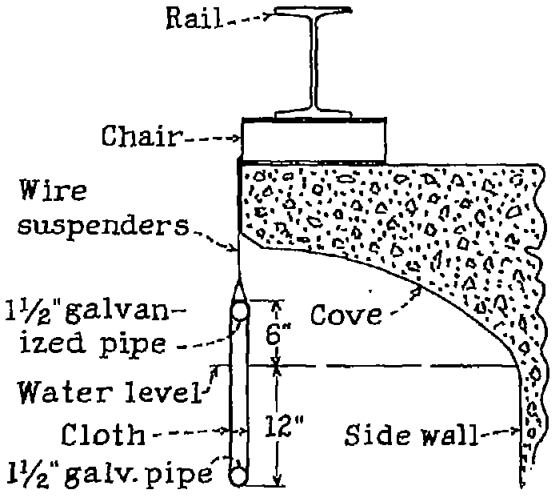

Figure 1.- Vertical screen.

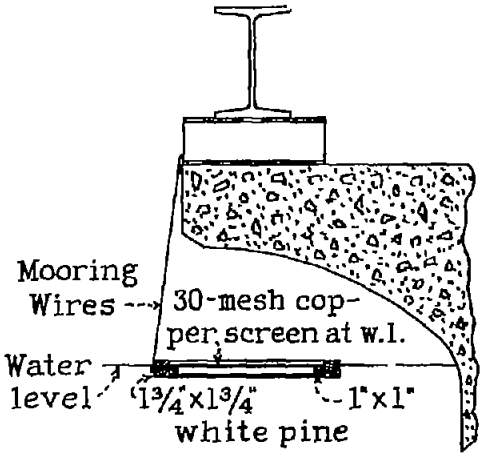

Figure 2.- Floating horizontal screen.

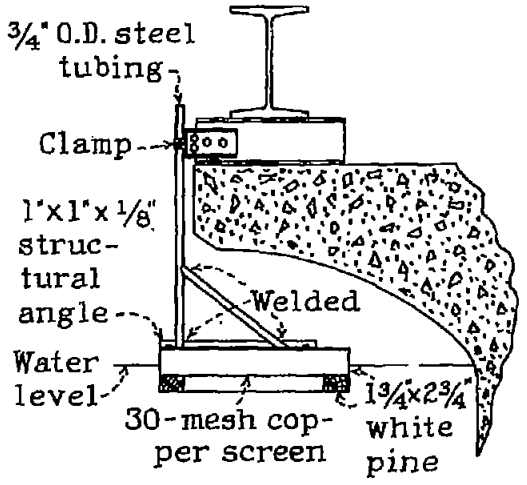

Figure 3.- Fixed horizontal screen.

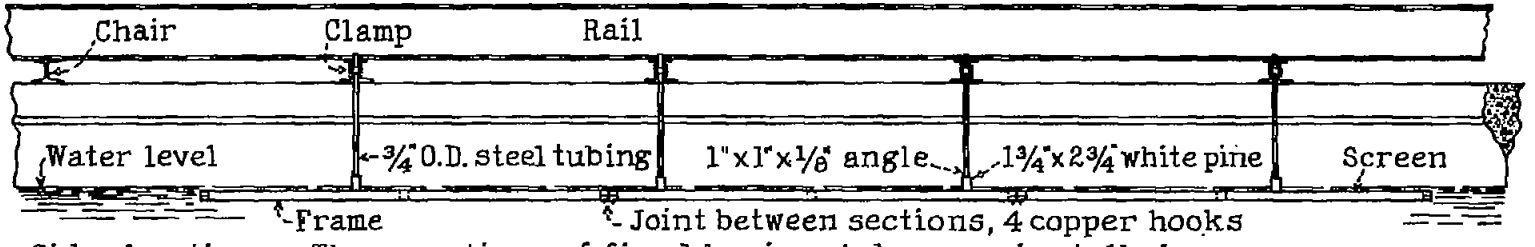

Side elevation. Three sections of fixed horizontal screen installed.

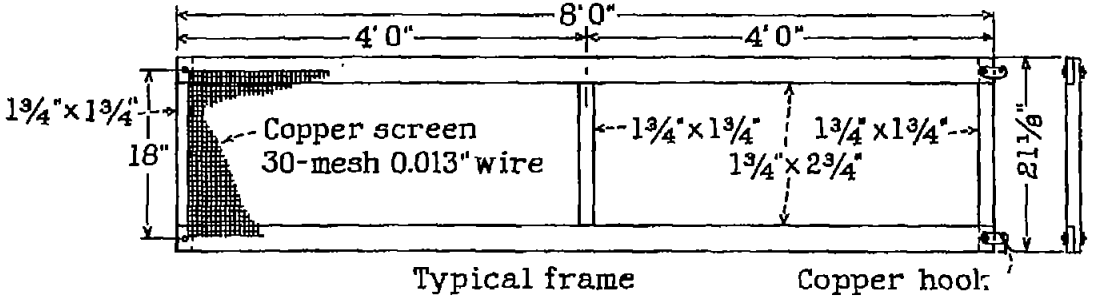

Figure 4.- Wave suppressor frames.