REPORT No. 484

A FLIGHT INVESTIGATION OF THE EFFECT OF MASS DISTRIBUTION AND CONTROL SETTING ON THE SPINNING OF THE XN2Y-1 AIRPLANE

By N. F. Scudder

SUMMARY

The investigation of the effect of mass distribution on the spinning of airplanes initiated with the tests on the NY-1 *airplane has been continued by tests on another airplane in order to increase the scope of the information and to observe particularly the behavior of an airplane that shows considerable change in sideslip angle for its various conditions of spinning.*

The XN2Y-1 *naval training biplane was used for the present tests in which changes of ballast along the longitudinal and lateral axes and changes of aileron, stabilizer, and elevator settings were made. The effects of these changes on the steady spin were measured in flight.*

The effects of varied mass distribution and control setting were found to be in agreement with the results found with the NY-1 *airplane except for the cases in which changes in sideslip occurred with the changes in the other parameters of the spin. Satisfactory qualitative agreement between these tests and the theory developed in the analysis of the* NY-1 *spin, extended to include the effects of sideslip on equilibrium, was obtained when reasonable assumptions as to the aerodynamic properties of the airplane were made.*

The effect of a large amount of ballast placed on the wing struts (not tested with NY-1*) was to increase the angle of attack, rate of rotation, and inward sideslip. These effects were in agreement with the theory developed for the* NY-1 *airplane. No dangerous features of the recovery developed during the tests.*

INTRODUCTION

The question of safety in the spinning of airplanes continues to be a matter of great importance to designers and users of airplanes. Various methods of estimating the probable spinning properties of an airplane using wind-tunnel tests or computations employing the dimensions of the airplane have been devised, but at present no effective method for predicting the spinning properties of an airplane exists. Further flight and wind-tunnel testing is, therefore, being conducted by the N.A.C.A. to determine the design characteristics necessary to diminish or eliminate the danger associated with the spinning of airplanes.

The investigation of the effects of mass distribution on spinning made by the Committee (reference 1) has been continued with another airplane to get further information on this subject. The first tests, in which the NY-1 airplane was used, did not bring to light the effect of sideslip on spinning equilibrium and further tests that would indicate the generality of the conclusions already obtained were desired.

The present paper is a report of flight tests made on the XN2Y-1 airplane in which mass distribution along both the longitudinal and lateral axes was varied and the control surfaces were deflected in various ways. Wind-tunnel measurements of the aerodynamic properties of this airplane have not yet been made, but a model is under construction in preparation for tests on the N.A.C.A. spinning balance. The tests reported herein were made during the year 1931.

APPARATUS AND METHOD

The airplane used for these tests was a naval training biplane powered with a 7-cylinder Warner 110-horsepower engine. Ballast containers were fitted at the center of gravity, under the engine mount, in the tail of the fuselage, and at the outer interplane struts. With the exception of the one under the engine mount, all ballast containers were located on an airplane axis, or so close to one that the distance to the axis could be neglected in computations of moments of inertia of the ballast. All but the container at the center of gravity were provided with means of dumping the ballast carried in them by operation of a lever in the pilot's cockpit. It was never necessary, however, to release the ballast during the tests. The containers at the wing struts were conveniently made of heavy canvas; the others were made of metal. The line drawing (fig. 1) shows the dimensions of the airplane and the positions of the ballast containers.

The initial moments of inertia of the airplane with its test equipment installed were obtained by means of swinging tests as described in reference 2.

The rigging and external dimensions of the airplane were not changed during the period of the tests. The effect of control setting on the steady spins was obtained for ailerons deflected with and against the spin, elevator up and down, and stabilizer full up and full down.

The quantities necessary for a complete determination of the motion of the airplane were measured with an instrument installation essentially the same as that described in reference 3, consisting principally of three electrically driven gyroscopic angular-velocity recorders, a three-component accelerometer, a sensitive altimeter, and a timer. The accelerometer was placed as close to the center of gravity as possible and the readings were corrected to the center of gravity. For these tests the accelerometer was housed in an insulated box that was held at a constant temperature by a thermostatically controlled electric heater. Control of the operating temperature of this instrument eliminated temperature-effect errors and obviated the necessity for frequent changes of the damping oil with changes of air temperature. Special precautions were also observed to insure precision of the angular-velocity records. The cover of each angular-velocity recorder was provided with a window through which the gyroscope rotor could be seen, so that the speed of the gyroscope could be checked at the end of each flight by means of a portable stroboscope, for the purpose of detecting changes in calibration.

The method of making the flight tests and computing the results was the same as that described in reference 3. The mean altitude for the spin records was 3,000 feet and the standard-atmosphere density of 0.002176 slug per cubic foot for this altitude was used in computing all the coefficients.

PRECISION

The precision of the instrumental measurements was equivalent to that stated in reference 1. There were probably fewer cases of error due to faulty operation of the angular-velocity recorders in these than in previous tests because of frequent checks on the speed of the gyroscopes.

The limits of error of the fundamental measurements may be summarized as follows: Angular velocity, ±3 percent for each component; acceleration, ±0.05 g; interval of altitude, ±3 percent; time, ±3 percent; weight, ±1 percent; moments of inertia, ±2.5 percent, ±1.3 percent, and ±0.8 percent for A, B, and C, respectively.

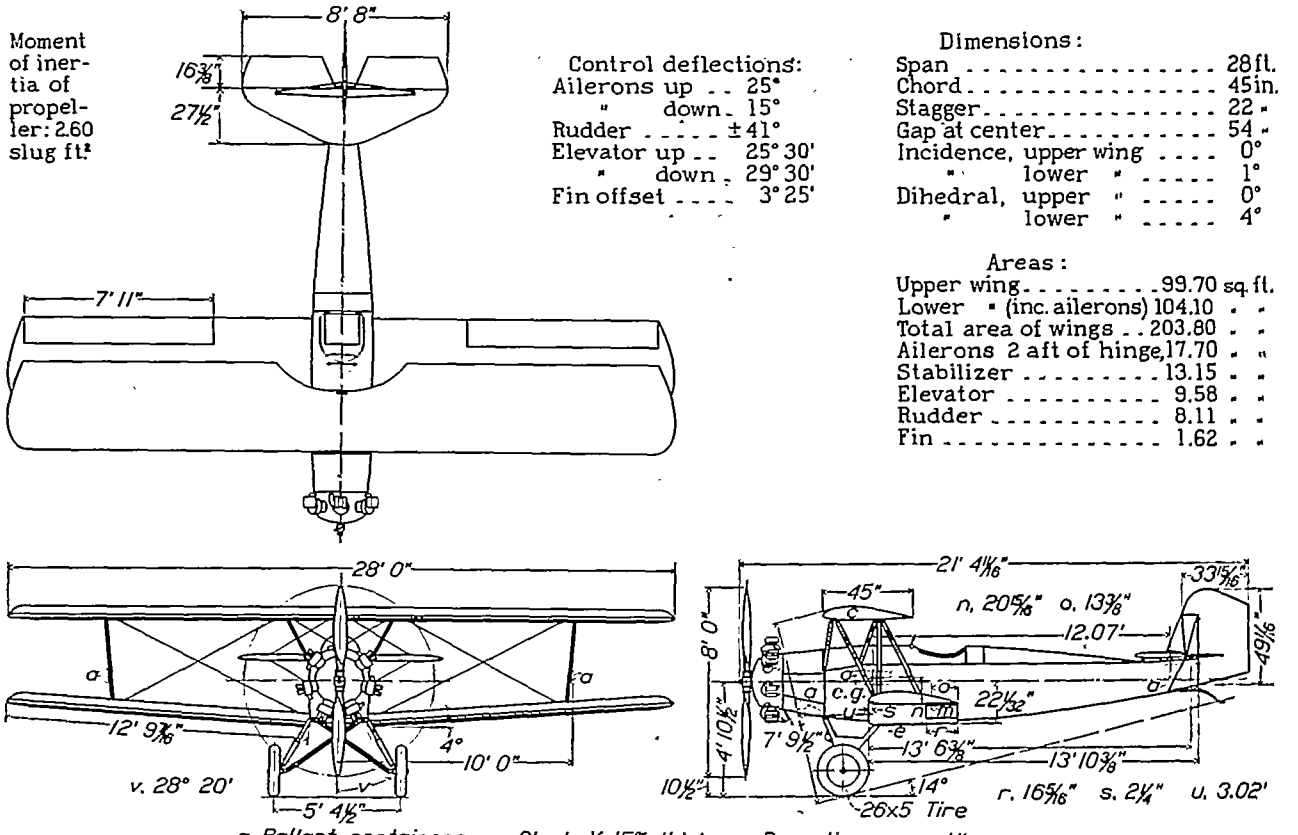

FIGURE 1.—Line drawing and general dimensions of the XN2Y-1 airplane.

RESULTS

Before presenting the results of the tests, a list of the symbols appearing in the text or tables that are not sufficiently defined on the covers of the report is given with definitions. A more extensive table of symbols and definitions may be found in the appendix of reference 3.

X'', Y'', Z'', forces along ground axes.

p, q, r, components of angular velocity about airplane axes (based on the thrust line).

α_X, angle of attack referred to airplane X axis (principal X axis for practical purposes).

β, angle of sideslip (positive for outward sideslip, left spin; negative for outward sideslip, right spin).

$\Lambda = \frac{\Omega b}{2V}$ spin coefficient (Ω, resultant angular velocity).

A, B, C, moments of inertia about the principal axes.

$C_m = \frac{M}{q\,b\,S}$ The symbol C_m as used here may be converted to the usual form by multiplying by the span-chord ratio, which is 7.47.

The data are presented completely in numerical form in tables I, II, and III. Table I gives the results measured with instruments, table II gives the condition of the airplane at the time of the spin, and table III gives the results computed from records. Pitching moments about the initial center-of-gravity position were used in computing all pitching-moment coefficients. This method required adding the moment of ballast (taking effect of accelerations into account) to the gyroscopic moment of the airplane for the cases in which tail-heavy conditions of loading were used. The center-of-gravity position is given as percentage mean chord in table II. This mean chord was taken as the chord in the plane of symmetry midway between the upper and lower wing roots measured along the line connecting one-third chord points, with leading and trailing ends on lines joining the corresponding edges of the upper and lower wings, and having an incidence midway between that of the upper and lower wings.

DISCUSSION OF RESULTS

EFFECT OF INCREASE OF WING LOADING

Ballast condition	Test no.	$\frac{W}{S}$	Ω	α_x	β [1]	γ	V	Radius
		Lb./sq. ft.	*Rad./sec.*	°	°	°	*Ft./sec.*	*Ft.*
No ballast, left spin.	38, 40, 41	7.69	3.05	53.5	−4.1	−84.6	78.4	2.8
Ballast at *c.g.*, left spin.	43, 44, 45	8.85	3.16	53.7	1.3	−84.4	84.6	2.6
No ballast, right spin.	118, 120, 121	7.69	4.10	60.2	13.4	−86.1	64.2	1.0
Ballast at *c.g.*, right spin.	122, 124, 125	8.85	4.22	58.8	12.6	−86.3	71.8	1.1

[1] Note that positive β for right spin is inward sideslip, as is negative β for left spin

For the left spins the linear velocity varied as the square root of the wing loading, but for the right spins the variation of linear velocity was greater. The additional increase of linear velocity in the latter case was probably caused by the decrease of drag as a result of decreased angle of attack. Increase of wing loading caused an increase in the rate of rotation, but not as much increase as was noted for similar tests on the NY-1. The other changes were slight.

The right spins differ from the left spins considerably, both in respect to the magnitudes of the parameters and the relative changes resulting from the increase of wing loading. These differences between right and left spins are evidently due to dissymmetry of the airplane, because the motor was stopped for all tests. One item of dissymmetry common to airplanes was shown to be of considerable importance on the subject airplane; namely, fin offset. Placing the fin parallel to the plane of symmetry eliminated most of the differences in the characteristics of the right and left spins. This result was obtained subsequent to the spin tests given in this report by repeated trials with the fin neutral and offset various amounts. The remainder of the dissymmetry may be attributed to rigging and irregularity of airfoil section. The rigging and airfoil sections were measured very carefully, and small differences were found, but these could not be more than partially corrected without rebuilding the airplane in accurate jigs.

EFFECT OF MOVING BALLAST FROM THE CENTER OF GRAVITY TO THE NOSE AND THE TAIL

Ballast condition	Test no.	Ω	α_x	β	γ	V	Radius
		Rad./sec.	°	°	°	*Ft./sec.*	*Ft.*
Ballast at *c.g.*, left spin.	43, 44, 45	3.16	53.7	1.3	−84.4	84.6	2.6
Ballast at nose and tail, left spin.	51, 52, 54	2.78	50.0	.3	−83.0	87.2	3.8

Change of the amount of ballast shown in table II from the center of gravity to the nose and the tail with no shift of mass centroid caused a decrease of angle of attack, a decrease in rate of rotation, slight change in sideslip, and a decrease in glide-path angle. These results are the same as the results of the corresponding tests with the NY-1 airplane.

EFFECT OF MOVING BALLAST FROM THE CENTER OF GRAVITY TO THE WING STRUTS

Ballast condition	Test no.	Ω	α_x	β	γ	V	Radius
		Rad./sec.	°	°	°	*Ft./sec.*	*Ft.*
All ballast at *c.g.*, left spin.	43, 44, 45	3.16	53.7	1.3	−84.4	84.6	2.6
Ballast at *c.g.* and wing holders ½ full, left spin.	56, 57, 58	3.30	51.6	1.7	−86.4	87.9	2.5
Ballast at *c.g.* and wing holders ¾ full, left spin.	60, 61, 62	3.22	52.4	1.5	−84.3	83.2	2.6
Ballast at *c.g.* and wing holders full, left spin.	82, 84, 85	4.42	63.6	−7.5	−87.4	67.1	.7

The result of transferring a large amount of ballast to the wing struts of this airplane was an increase in the equlibrium angle of attack, an increase in the rate of rotation, and a decrease in the radius and vertical velocity. For less than the maximum amount of ballast added, the changes in the equilibrium conditions of the spin were small and not proportional to the amount of ballast moved to the wing tips. Thus, the first increment of ballast change caused a decrease in angle of attack and very little change in the other parameters of the spin equilibrium. The mechanism of this behavior will probably be better understood when data showing the aerodynamic properties of the airplane in a spin have been obtained from wind-tunnel measurements. The results for the subsequent additions of

ballast were in agreement with the predictions of the theory.

It is important to note that these additions of ballast at the wing tips did not introduce any dangerous changes in the nature of the recoveries. Recovery was observed to be slower for the spins characterized by high angle of attack and high rate of rotation, but no tendency for the controls to become ineffective was observed. No systematic tests arranged to show as closely as possible the effect of mass distribution on the ease of recovery were made; the foregoing statement was based on the observations made by the pilots during the spins required to make the records.

EFFECT OF MOVING BALLAST FROM CENTER OF GRAVITY TO TAIL

Ballast condition	Test no.	Ω	α_x	β	γ	V	Radius
		Rad./sec.	°	°	°	*Ft./sec.*	*Ft.*
Ballast at *c.g.*, left spin.	43, 44, 45	3.16	53.7	1.3	−84.4	84.6	2.6
Ballast at *c.g.* and tail, left spin.	88, 89, 90	3.12	63.5	−9.3	−84.9	76.8	2.1

Moving ballast from the center of gravity to the tail caused a very slight decrease in rate of rotation and slight increase in radius, but the most important changes were increases of angle of attack and angle of inward sideslip. The tests with the NY–1 airplane and the theory based on the NY–1 model tests indicate that, in the absence of changes of sideslip angles, the angle of attack should have decreased if it changed at all.

A further study of these results making use of curves derived from the NY–1 model tests leads to an interesting conclusion regarding the yawing moments of the wing cellule. As regards the effect of sideslip on gyroscopic yawing moments, the observed change in sideslip between the two conditions of mass distribution would be expected to result in a decrease in the angle of attack for equilibrium. Likewise, the change made in $(C–A)$ by placing ballast in the tail would lead to a decreased equilibrium angle of attack. On the other hand, the loss of damping yawing moment of the tail accompanying the observed change in sideslip would be expected to require an increase in the angle of attack for the equilibrium. The net effect would be expected to be little, if any, change in angle of attack instead of the increase as was actually observed. It seems probable, therefore, that the wing yawing moments tending to assist the spin increased, the increase corresponding to an increase in coefficient of about 0.01.

The results of these tests illustrate an example of changes in the relative values of the parameters of the pitching-moment equilibrium not previously encountered in this investigation. An inspection of the simple equation for pitching-moment equilibrium

$$-(C–A)\,\Omega^2\,\frac{\sin 2\,\alpha}{2}=M$$

shows several possibilities when $(C–A)$ is changed. In the absence of sideslip changes, previous studies have shown definitely that pitching-moment equilibrium is reestablished after an increase in $(C–A)$ by decrease of angular velocity and only slight change in angle of attack. The absence of change of angle of attack without change in angle of sideslip eliminates the possibility of large change of wing yawing moment, so that the prediction of the consequences of a change in $(C–A)$ may be made with considerable certainty. The effect of changing $(C–A)$ by moving ballast to the nose and tail with the XN2Y–1 airplane was in agreement with such a prediction. When sideslip is introduced as a factor in establishing the new equilibrum, considerable changes in yawing-moment equilibrium may be produced, as evidently occurred in the tests with ballast at the tail. In this case, pitching-moment equilibrium was reestablished by a slight decrease of angular velocity and a considerable change in aerodynamic pitching moment resulting from the increase of angle of attack required for equilibrium of all moments.

EFFECT OF MOVING BALLAST FROM CENTER OF GRAVITY TO WINGS AND TAIL

Ballast condition	Test no.	Ω	α_x	β	γ	V	Radius
		Rad./sec.	°	°	°	*Ft./sec.*	*Ft.*
Ballast at *c.g.*, left spin.	43, 44, 45	3.16	53.7	1.3	−84.4	84.6	2.6
Ballast at *c.g.*, wings, and tail, left spin.	77, 78, 79	3.86	70.1	−8.8	−85.6	67.5	.94

The changes in the spin equilibrium resulting from transfer of ballast from the center of gravity to the wing tips and the tail are about what would be expected after inspecting the results of the tests made with each of the two ballast changes separately. The angle of attack increased to the largest value yet measured and the sideslip increased in the inward sense. The decreases in linear velocity and radius of spin were relatively large.

EFFECT OF DISPLACEMENTS OF STABILIZER, ELEVATOR, AND AILERONS

Control-surface positions	Test no.	Ω	α_x	β	γ	V	Radius
		Rad./sec.	°	°	°	*Ft./sec.*	*Ft.*
Normal [1]	38, 40, 41	3.05	53.5	−4.1	−84.6	78.4	2.8
Stabilizer, leading edge up.	102, 103, 104	3.96	62.7	−12.5	−86.0	65.8	1.2
Stabilizer, leading edge down.	98, 101	3.76	60.3	−10.1	−85.6	65.4	1.4
Elevator down	111, 112, 113	3.70	53.2	−.6	−84.1	66.4	1.9
Ailerons with spin	105, 106, 107	3.55	57.3	−11.0	−84.9	68.1	1.7
Ailerons against spin	108, 109, 110	4.02	65.7	−9.4	−86.7	66.9	.96

[1] Ailerons neutral, elevator full up, rudder hard over (left). Subsequent entries in this column give details in which the control setting deviated from the normal setting. All deflections were to the limit of full travel.

Comparison of the values of angle of attack obtained with the stabilizer neutral, up, and down shows unexpected relations until the effect of the changes of sideslip are considered. Since the values of sideslip for the two sets of tests with stabilizer up and down were respectively 8° and 6° greater in the inward sense than for the tests with the stabilizer neutral, it may be seen from the theory given in reference 4 that the angle of attack should be greater for the former two tests than for the latter, although it would be expected that the angle of attack for stabilizer neutral would fall between the values for stabilizer up and stabilizer down in the absence of changes of angle of sideslip. Further consideration of the results shows also that the effect of moving the stabilizer from up to down had, comparatively, a small effect on the spin, and that this effect was in agreement with the theory relating to the effect of pitching moment on the spinning equilibrium.

Moving the elevator down caused the expected increase in rate of rotation, but the change in angle of attack was negligible. The change in angle of sideslip was from −4.1° to −0.6°, an increase in the outward sense, which would of itself cause a decrease of angle of attack and therefore offset the increase of angle of attack required by the theory when the elevator is moved down and sideslip angle does not change.

Comparison of the test results for ailerons neutral and with and against the spin shows greater angle of attack and greater inward sideslip for ailerons deflected either way from neutral. The increase of angle of attack for both deflections was evidently associated with the increase of inward sideslip, but the increase of inward sideslip for both deflections is not readily explained from the present knowledge of the problem. Further wind-tunnel tests may lead to an understanding of this result.

Comparison of the tests of ailerons with the spin and against the spin shows the angle of attack to be less and angle of sideslip greater inward for ailerons with the spin. Force tests at angles of attack in the spinning range (reference 5) indicate that aileron deflection with the spin would increase both the lift and drag of the outer tip. The changes of forces on the inner tip as a result of changes of aileron setting would be inappreciable because the angle of attack of the inner wing tip in these tests was very close to 90°. Such a change in the forces on the wings would require an increase of inward sideslip for rolling-moment equilibrium, but the increase in drag at the outer tip would cause the increase in angle of attack for simultaneous yawing-moment and pitching-moment equilibrium to be less than would have been the case in its absence. Deflection of the ailerons against the spin would produce opposite moments and changes in the spin. Although the values of the spin parameters for ailerons neutral did not lie between the values for ailerons with and ailerons against the spin, it is seen that the tests for ailerons with the spin and against the spin taken alone give results in agreement with the theory.

These ailerons produced much less pronounced changes in the spin than were produced in the case of the NY-1 airplane. The differences of aileron arrangement and deflection for the two airplanes is such that the difference in effects would be expected.

FURTHER INVESTIGATIONS

The model tests already planned for this airplane on the spinning balance will be of particular value in clarifying the understanding of the results reported herein, especially such questions as why the addition of ballast at the struts did not make an important difference until it had all been added, why the values for ailerons neutral did not fall between those for ailerons deflected each way, and whether the change of wing yawing moment anticipated as a result of the flight tests with ballast at the tail is due to the change of angle of attack or to the change of angle of sideslip. The flight tests give information only about the conditions that actually produce equilibrium; the wind-tunnel tests should, in addition, give the conditions that prevent the existence of equilibrium at other values of the parameters involved. This latter information will be equally valuable to a complete knowledge of the subject.

The subject of yawing moments of the wing cellule as a function of angles of attack and sideslip holds a very important position in the studies leading to methods of predicting the design characteristics of airplanes that lead to danger in spinning. It is necessary that more information be obtained for ordinary wing-cellule arrangements and that design characteristics be sought which will produce the minimum of undesirable wing yawing moment.

CONCLUSIONS

The following conclusions are directly comparable with the conclusions drawn from similar tests conducted on the NY-1 airplane, with the exception of the first three items, which pertain to effects that were not investigated in the previous case. In many instances, the conclusions drawn from the NY-1 tests are substantiated herein, but as regards items 4 and 5, there is disagreement. This disagreement indicates the importance of sideslip in the spinning equilibrium, for in the tests to which these conclusions pertain there was a variation in sideslip of considerable magnitude, whereas with the NY-1 airplane, there was little or no variation in sideslip angle.

1. The result of moving a large amount of ballast from the center of gravity to the wing tips without change of mass centroid was a large increase in angle

of attack and rate of rotation, and a considerable diminution in the radius of the spin.

2. The effect of moving the ballast from the center of gravity simultaneously to the wing struts and tail is to produce changes of the same sense as would be obtained by adding the effects obtained for the two changes made separately, although the numerical magnitudes of the changes to the parameters of the spin were not as great as the sum of the effects for the changes made separately.

3. The results of these tests are in agreement with the prediction of the theory applied to the NY-1 tests when the theory is extended to include qualitatively the effects of sideslip.

4. The effect of moving the center of gravity aft by moving the ballast from the center of gravity to the tail was an increase in angle of attack and in inward sideslip.

5. When ailerons or stabilizer were deflected both ways from neutral, the values of the parameters for the resulting spins did not fall on both sides of the corresponding values for the normal spin, but instead were either greater or smaller than the corresponding normal spin values for both senses of control deflection. This behavior is associated with observed changes in angle of sideslip.

6. Linear velocity and angular velocity increase with wing loading. If no change in angle of attack and no large change of angle of sideslip occurs, the linear velocity varies as the square root of the wing loading.

7. The changes in the spin parameters produced by moving ballast from the center of gravity to the nose and tail with no change of mass centroid were decrease in rate of rotation, decrease in angle of attack, decrease in glide-path angle, and a slight change in sideslip angle.

8. Change of elevator deflection from up to down caused an increase in rate of rotation and a change of sideslip in the outward sense, but no change in angle of attack.

9. Change of stabilizer setting from leading edge full up to full down had very little effect on the spin. The sense of the changes was the same as for elevator deflections causing the same changes of pitching moment of the tail.

10. Spins with aileron set with the spin as compared with spins with aileron against the spin are characterized by smaller rate of rotation and angle of attack and almost the same but slightly greater angle of inward sideslip.

11. This and previous investigations of the effect of mass distribution on the steady spin indicate that even large changes in mass distribution along the longitudinal and lateral axes do not cause airplanes having satisfactory aerodynamic characteristics at spinning angles of attack to spin dangerously. Large changes in the parameters of the spin may be caused, but no noticeably dangerous features of the spin develop.

Langley Memorial Aeronautical Laboratory,
National Advisory Committee for Aeronautics,
Langley Field, Va., *January 10, 1934.*

REFERENCES

1. Scudder, Nathan F.: A Flight Investigation of the Spinning of the NY-1 Airplane with Varied Mass Distribution and Other Modifications, and an Analysis Based on Wind-Tunnel Tests. T.R. No. 441, N.A.C.A., 1932.
2. Soulé, Hartley A., and Miller, Marvel P.: The Experimental Determination of the Moments of Inertia of Airplanes. T.R. No. 467, N.A.C.A., 1933.
3. Soulé, Hartley A., and Scudder, Nathan F.: A Method of Flight Measurement of Spins. T.R. No. 377, N.A.C.A., 1931.
4. Scudder, Nathan F.: A Study of Factors Affecting the Steady Spin of an Airplane. T.N. No. 468, N.A.C.A., 1933.
5. Knight, Montgomery, and Wenzinger, Carl J.: Wind Tunnel Tests on a Series of Wing Models Through a Large Angle of Attack Range. Part I.—Force Tests. T.R. No. 317 N.A.C.A., 1929.

TABLE I.—INSTRUMENT DATA

Test no.[1]	Angular velocity readings			Accelerometer readings corrected to *c.g.*			Vertical velocity, ft./sec.
	p Rad./sec.	q Rad./sec.	r Rad./sec.	$\frac{X}{mg}$	$\frac{Y}{mg}$	$\frac{Z}{mg}$	
38L	−1.85	0.535	−2.52	−0.0510	−0.0078	1.31	75.8
40L	−1.70	.492	−2.49	−.0366	−.0142	1.31	73.9
41L	−1.68	.338	−2.37	−.0445	−.0003	1.31	75.1
43L	−1.73	.285	−2.65	−.0759	.0093	1.26	83.2
44L	−1.87	.231	−2.56	−.0616	−.0034	1.29	79.0
45L	−1.89	.146	−2.48	−.0347	.0340	1.31	80.8
51L	−1.75	.204	−1.97	−.0383	.0093	1.32	85.4
52L	−1.78	.383	−2.19	−.0855	−.0147	1.36	87.3
54L	−1.72	.330	−2.27	−.0820	−.0166	1.34	87.0
56L	−2.01	.236	−2.66	−.0570	.0138	1.29	80.2
57L	−1.99	.163	−2.53	−.0378	.0118	1.20	84.5
58L	−2.08	.218	−2.60	−.0777	.0215	1.24	92.1
60L	−1.95	.218	−2.55	−.0327	.0188	1.28	86.8
61L	−1.40	.198	−2.55	−.0340	.0192	1.29	80.2
62L	−1.94	.302	−2.59	−.0398	.0030	1.30	81.4
77L	−1.18	.889	−3.64	−.253	−.0168	1.08	65.5
78L	−1.20	.869	−3.55	−.228	−.0330	1.10	69.2
79L	−1.21	.813	−3.53	−.225	−.0132	1.10	67.3
82L	−1.47	.723	−3.81	.0239	.0376	1.13	60.8
84L	−1.53	.757	−4.29	.0440	.0371	1.12	66.7
85L	−1.46	.757	−4.19	.0297	.0151	1.11	67.0
88L	−1.27	.788	−2.76	−.167	−.0056	1.12	74.9
89L	−1.24	.808	−2.82	−.158	−.0368	1.14	75.8
90L	−1.32	.707	−2.66	−.155	−.0135	1.16	74.7
98L	−1.72	.915	−3.20	.0183	−.0370	1.22	65.8
100L	−1.78	.718	−2.88	.0016	−.0143	1.23	70.4
101L	−1.71	.935	−3.25	.0250	−.0157	1.18	64.5
102L	−1.63	1.07	−3.39	.0152	−.0320	1.16	65.1
103L	−1.65	1.03	−3.46	.0086	−.0207	1.18	65.6
104L	−1.61	1.12	−3.46	.0073	−.0292	1.20	66.2
105L	−1.74	.953	−2.86	−.0031	−.0540	1.21	70.9
106L	−1.72	.967	−2.97	−.0019	−.0508	1.23	65.8
107L	−1.80	.971	−2.96	.0050	−.0585	1.23	66.7
108L	−1.50	.882	−3.65	.0142	.0119	1.15	64.8
109L	−1.53	.886	−3.65	.0182	.0271	1.11	66.5
110L	−1.51	.797	−3.58	.0161	.0155	1.10	69.1
111L	−2.37	.381	−2.71	−.0719	.0275	1.34	69.2
112L	−2.04	.409	−3.16	−.0442	.0267	1.21	63.2
113L	−2.02	.463	−3.07	−.0503	.0314	1.23	65.6
118R	1.78	1.10	3.40	.0761	.0322	1.19	65.4
120R	1.82	1.30	3.57	.136	.0261	1.23	61.9
121R	1.87	1.13	3.47	.0994	.0183	1.18	64.7
122R	1.96	1.10	3.58	.0626	.0303	1.20	76.8
124R	2.04	1.27	3.65	.0794	.0311	1.24	68.4
125R	2.00	1.12	3.36	.0817	.0436	1.24	69.7

[1] L, left-hand spin; R, right-hand spin.

TABLE II.—PROPERTIES OF AIRPLANE

Test no.	Weight during spin, pounds	Ballast, pounds				Momental ellipsoid constants				C.g. position, percent mean chord	Control setting
		Front	C.g.	Rear	Wing	A	B	C	τ[1]		
						Slug feet²	Slug feet²	Slug feet²	°		
38L	1,573	0	0	0	0	741	919	1,367	0	32.2	Normal, stabilizer neutral.
40L	1,562	0	0	0	0	741	919	1,367	0	32.2	Do.
41L	1,568	0	0	0	0	741	919	1,367	0	32.2	Do.
43L	1,780	0	240	0	0	743	921	1,367	0	32.6	Do.
44L	1,786	0	240	0	0	743	921	1,367	0	32.6	Do.
45L	1,786	0	240	0	0	743	921	1,367	0	32.6	Do.
51L	1,811	192	0	48	0	750	1,201	1,639	1.75	32.2	Do.
52L	1,811	192	0	48	0	750	1,201	1,639	1.75	32.2	Do.
54L	1,778	192	0	48	0	750	1,201	1,639	1.75	32.2	Do.
56L	1,788	0	174	0	66	960	921	1,584	0	31.7	Do.
57L	1,805	0	174	0	66	960	921	1,584	0	31.7	Do.
58L	1,785	0	174	0	66	960	921	1,584	0	31.7	Do.
60L	1,817	0	140	0	100	1,066	921	1,690	0	31.8	Do.
61L	1,817	0	140	0	100	1,066	921	1,690	0	31.8	Do.
62L	1,811	0	140	0	100	1,066	921	1,690	0	31.8	Do.
77L	1,799	0	58	48	134	1,172	1,132	2,007	0	40.6	Do.
78L	1,799	0	58	48	134	1,172	1,132	2,007	0	40.6	Do.
79L	1,799	0	58	48	134	1,172	1,132	2,007	0	40.6	Do.
82L	1,799	0	106	0	134	1,172	921	1,796	0	31.9	Do.
84L	1,799	0	106	0	134	1,172	921	1,796	0	31.9	Do.
85L	1,799	0	106	0	134	1,172	921	1,796	0	31.9	Do.
88L	1,799	0	192	48	0	756	1,132	1,591	0	40.2	Do.
89L	1,771	0	192	48	0	756	1,132	1,591	0	40.2	Do.
90L	1,799	0	192	48	0	756	1,132	1,591	0	40.2	Do.
98L	1,546	0	0	0	0	754	919	1,380	0	32.2	Normal, stabilizer down 2½°.
100L	1,540	0	0	0	0	754	919	1,380	0	32.2	Do.
101L	1,540	0	0	0	0	754	919	1,380	0	32.2	Do.
102L	1,582	0	0	0	0	754	919	1,380	0	32.2	Normal, stabilizer up 5°.
103L	1,587	0	0	0	0	754	919	1,380	0	32.2	Do.
104L	1,576	0	0	0	0	754	919	1,380	0	32.2	Do.
105L	1,540	0	0	0	0	754	919	1,380	0	32.2	Ailerons with spin,[2] stabilizer neutral.
106L	1,552	0	0	0	0	754	919	1,380	0	32.2	Do.
107L	1,552	0	0	0	0	754	919	1,380	0	32.2	Do.
108L	1,564	0	0	0	0	754	919	1,380	0	32.2	Ailerons against spin, stabilizer neutral.
109L	1,570	0	0	0	0	754	919	1,380	0	32.2	Do.
110L	1,570	0	0	0	0	754	919	1,380	0	32.2	Do.
111L	1,590	0	0	0	0	754	919	1,380	0	32.2	Elevator down, stabilizer neutral.
112L	1,590	0	0	0	0	754	919	1,380	0	32.2	Do.
113L	1,590	0	0	0	0	754	919	1,380	0	32.2	Do.
118R	1,558	0	0	0	0	744	919	1,370	0	32.2	Normal, stabilizer neutral.
120R	1,564	0	0	0	0	751	926	1,370	0	32.4	Do.
121R	1,564	0	0	0	0	751	926	1,370	0	32.4	Do.
122R	1,798	0	240	0	0	746	921	1,370	0	31.5	Do.
124R	1,804	0	240	0	0	746	921	1,370	0	31.5	Do.
125R	1,804	0	240	0	0	746	921	1,370	0	31.5	Do.

[1] Angle between X (body) axis and X^{IV} (principal) axis.
[2] "Ailerons with spin" is aileron deflection such that in normal flight the airplane would be caused to roll in the direction of the rolling of the spin.

TABLE III.—COMPUTED DATA

Test no.	Ω	R	Z'	α_x	β	γ	V	Radius	A	L^{IV}	M^{IV}	N^{IV}	Ballast moment	C_l	C_m	C_n
	Rad./sec.	*(mg)*	*(mg)*	°	°	°	*Ft./sec.*	*Ft.*		*Lb.-ft.*	*Lb.-ft.*	*Lb.-ft.*	*Lb.-ft.*			
38L	3.17	1.31	1.02	52.6	−3.5	−83.6	76.3	2.7	0.582	−604.3	−2,914.7	−175.6	0	−0.0167	−0.0807	−0.0049
40L	3.06	1.31	1.05	54.3	−3.0	−83.6	74.3	2.7	.576	−548.1	−2,655.8	−149.2	0	−.0160	−.0774	−.0044
41L	2.93	1.31	1.04	53.7	0	−83.3	75.6	3.0	.542	−359.5	−2,497.2	−101.1	0	−.0101	−.0704	−.0020
43L	3.17	1.27	1.01	56.2	0	−84.7	83.6	2.4	.531	−356.6	−2,848.8	−87.6	0	−.00708	−.0566	−.0017
44L	3.18	1.29	1.00	53.1	0.8	−84.1	80.3	2.6	.554	−320.0	−3,466.2	−93.6	0	−.00799	−.0860	−.0014
45L	3.12	1.31	1.00	52.1	3.0	−84.4	90.2	2.8	.484	−160.9	−3,402.4	−49.1	0	−.00319	−.0674	−.0010
51L	2.64	1.32	.92	47.8	3.3	−82.3	86.2	4.4	.430	−176.2	−3,066.3	−161.0	0	−.00382	−.0665	−.0035
52L	2.84	1.36	.99	50.1	−1.0	−83.2	88.0	3.7	.453	−367.4	−3,454.1	−306.9	0	−.00765	−.0719	−.0004
54L	2.88	1.34	1.01	52.0	−1.2	−83.5	87.5	3.4	.460	−378.6	−3,474.0	−295.0	0	−.00796	−.0731	−.0002
56L	3.34	1.29	.99	52.4	1.2	−84.7	86.6	2.4	.540	−415.3	−3,330.1	18.5	0	−.00893	−.0716	.0004
57L	3.22	1.26	.94	51.4	2.7	−84.4	84.9	2.6	.532	−272.5	−3,141.6	12.6	0	−.00609	−.0703	.0003
58L	3.34	1.25	.92	50.9	1.3	−85.0	92.4	2.4	.505	−376.9	−3,372.4	17.7	0	−.00710	−.0636	.0003
60L	3.22	1.28	.98	52.0	1.6	−84.5	87.2	2.6	.516	−426.9	−3,102.9	61.7	0	−.00904	−.0657	.0013
61L	3.19	1.29	.99	52.7	2.3	−84.1	80.6	2.6	.554	−388.5	−3,029.4	54.5	0	−.00963	−.0751	.0014
62L	3.25	1.30	.99	52.5	.5	−84.2	81.9	2.6	.555	−602.2	−3,128.0	84.9	0	−.01448	−.0752	.0020
77L	3.93	1.11	.93	70.7	−9.0	−85.7	65.7	1.3	.838	−2,834.6	−3,574.8	41.8	642.5	−.1059	−.1575	.0016
78L	3.84	1.12	.95	69.9	−9.1	−85.9	69.3	1.3	.776	−2,694.8	−3,564.2	41.8	648.5	−.0903	−.1412	.0014
79L	3.81	1.13	.95	69.7	−8.2	−85.7	67.5	1.3	.792	−2,509.0	−3,554.2	39.3	654.2	−.0888	−.1258	.0014
82L	4.15	1.13	1.04	67.4	−7.5	−87.0	66.9	.83	.868	−2,411.3	−3,497.5	266.8	0	−.0868	−.1259	.0096
84L	4.62	1.13	1.05	69.1	−7.4	−87.6	66.7	.60	.970	−2,842.9	−4,109.3	291.5	0	−.1029	−.1487	.0106
85L	4.50	1.11	1.04	69.4	−7.6	−87.5	67.6	.64	.932	−2,777.0	−3,829.5	278.5	0	−.0978	−.1349	.0098
88L	3.14	1.13	.92	63.4	−9.7	−84.9	75.2	2.1	.585	−999.3	−2,940.6	−377.3	654.2	−.0285	−.1024	−.0107
89L	3.18	1.15	.96	64.8	−10.1	−85.2	76.0	2.0	.586	−1,045.8	−2,914.6	−376.2	666.0	−.0291	−.0998	−.0105
90L	3.05	1.17	.96	62.2	−8.1	−84.5	75.1	2.3	.569	−864.2	−2,923.6	−349.9	677.5	−.0247	−.1029	−.0100
98L	3.74	1.22	1.06	60.0	−0.9	−85.5	66.0	1.4	.794	−1,349.0	−3,436.0	−258.9	0	−.0499	−.1271	−.0090
100L	3.46	1.23	1.03	56.7	−7.1	−84.9	70.7	1.8	.685	−953.0	−3,207.4	−210.8	0	−.0307	−.1034	−.0068
101L	3.79	1.18	1.04	60.6	−10.3	−85.7	64.7	1.3	.821	−1,403.1	−3,482.9	−263.9	0	−.0540	−.1340	−.0102
102L	3.91	1.16	1.02	62.5	−12.3	−86.0	65.3	1.2	.838	−1,667.1	−3,448.1	−286.1	0	−.0630	−.1302	−.0108
103L	3.98	1.18	1.04	62.6	−12.3	−86.0	65.7	1.2	.848	−1,729.8	−3,566.1	−294.7	0	−.0645	−.1329	−.0110
104L	3.98	1.20	1.05	63.0	−12.9	−86.0	66.4	1.2	.840	−1,792.8	−3,499.5	−298.9	0	−.0655	−.1279	−.0109
105L	3.48	1.21	1.01	56.9	−11.2	−85.0	71.2	1.8	.635	−1,256.7	−3,122.8	−274.1	0	−.0399	−.0993	−.0087
106L	3.57	1.23	1.04	58.0	−10.9	−84.8	66.1	1.7	.756	−1,323.7	−3,206.8	−275.1	0	−.0489	−.1184	−.0102
107L	3.60	1.23	1.03	57.0	−10.8	−84.9	66.9	1.7	.753	−1,327.6	−3,343.2	−288.7	0	−.0477	−.1202	−.0104
108L	4.04	1.15	1.04	65.9	−9.6	−86.6	64.9	1.0	.872	−1,482.4	−3,424.8	−218.3	0	−.0567	−.1310	−.0083
109L	4.06	1.11	1.00	65.5	−9.8	−86.7	66.6	.94	.853	−1,491.2	−3,507.1	−224.5	0	−.0542	−.1274	−.0082
110L	3.97	1.10	.99	65.7	−8.8	−86.9	69.2	.95	.865	−1,315.7	−3,336.7	−198.5	0	−.0442	−.1139	−.0067
111L	3.62	1.34	.96	48.0	.8	−83.1	69.7	2.3	.727	−476.2	−4,018.2	−148.7	0	−.0158	−.1332	−.0049
112L	3.79	1.21	.98	56.1	−.9	−84.6	63.5	1.6	.835	−598.5	−4,041.3	−138.0	0	−.0238	−.1615	−.0055
113L	3.70	1.23	.99	55.4	−1.8	−84.5	65.9	1.7	.787	−655.2	−3,887.5	−154.7	0	−.0243	−.1441	−.0057
118R	3.99	1.20	1.06	60.4	12.5	−86.1	65.6	1.1	.853	1,634.2	−3,796.0	342.3	0	.0631	−.1421	.0128
120R	4.22	1.24	1.11	60.5	14.8	−86.1	62.1	1.0	.951	2,053.9	−4,031.8	414.2	0	.0861	−.1686	.0173
121R	4.10	1.19	1.05	59.7	12.8	−86.2	64.8	1.0	.836	1,743.6	−4,015.0	370.7	0	.0670	−.1539	.0142
122R	4.23	1.20	1.05	59.9	12.1	−86.7	76.9	1.0	.769	1,762.2	−4,374.2	375.0	0	.0480	−.1191	.0102
124R	4.37	1.25	1.09	58.9	13.6	−86.2	68.6	1.0	.892	2,085.5	−4,644.2	454.5	0	.0714	−.1590	.0156
125R	4.07	1.24	1.06	57.5	12.2	−85.9	69.9	1.2	.816	1,692.2	−4,203.0	392.6	0	.0558	−.1387	.0130