REPORT No. 485

THE DRAG OF AIRPLANE WHEELS, WHEEL FAIRINGS, AND LANDING GEARS—I

By William H. Herrnstein, Jr. and David Biermann

SUMMARY

Tests were made in the 7- by 10-foot wind tunnel and in the 20-foot tunnel of the National Advisory Committee for Aeronautics to determine the drag of a number of airplane wheels, wheel fairings, and landing gears designed or selected for an airplane of 3,000 pounds gross weight. All tests were made on full-sized models; those in the 7- by 10-foot tunnel were made at air speeds up to 80 miles per hour and those in the 20-foot tunnel were made at air speeds up to 100 miles per hour. Although most of the landing-gear tests were made in conjunction with a fuselage and at 0° pitch angle, some of the tests were made in conjunction with the fuselage plus wings and a radial air-cooled engine and at pitch angles from −5° to 6° to obtain an indication of the general effect of these various items on landing-gear drag. All tests were made in the absence of propeller slipstream.

The results of the investigation show that the lowest drag recorded for any landing gear tested was 13 pounds, at 100 miles per hour and 0° pitch, and that it might be possible to reduce this drag approximately 6 pounds by totally encasing the wheels of this gear in fairings. The highest landing-gear drag recorded was 98 pounds. Other points of interest brought out were: Fitting-plus-interference drag of ordinary types of landing gears averages about 44 percent of the drag due to these gears; low-pressure wheels and tires may be used with little or no increase in landing-gear drag; the proper wheel fairing may reduce the drag due to a landing gear more than any other refinement; fairing of all struts is of great importance; and landing gears having a single supporting strut have less drag than any other types of nonretracting gears. Also, the substitution of low-drag or retractable landing gears for conventional types on high-drag airplanes results in a negligible increase in high speed. Low-drag or retractable gears used in place of conventional gears on low-drag airplanes result in a substantial increase in high speed or saving in power at the same speed, the low-drag gear accomplishing a large percentage of the gain obtainable from the use of the retractable gear.

INTRODUCTION

Although the drag of the landing gear has been known to constitute a large portion of the total drag of an airplane in flight (see references 1, 2, and 3), practically no systematic research has been done for the express purpose of improving the aerodynamic characteristics of landing gears. In recent years designers have successfully attacked the problem and in some cases have designed landing gears that can be partly or fully retracted in flight. Little information, however, is available concerning the comparative drags of nonretracting landing gears and their component parts, the aerodynamic interference between the parts, or the degree to which attempted refinement of such gears may be successfully carried out.

The present investigation was made to obtain data concerning the following: The drag of wheels; the aerodynamic interference between wheels and struts; the drag of a wheel with various wheel fairings; the drag of wheels and gears in yaw; the drag of different types of landing gears; the effect of wings and a radial air-cooled engine on landing-gear drag; the effect of changes in pitch angle on landing-gear drag; and the effect of various modifications to landing gears on their drag. From these data an analysis of landing-gear drag was made and an indication of the lowest drag obtainable with a nonretracting landing gear obtained. The investigation included tests of 5 types of wheels, 6 types of wheel fairings with 3 modifications, and 22 different landing gears with a total of 55 modifications to these gears.

All the landing gears tested were attached to an open-cockpit fuselage and the tests were made without propeller slipstream. Most of the tests were made at 0° pitch angle and without wings or an engine attached to the fuselage. However, the effects of wings, of a radial air-cooled engine with and without

cowling, and of pitch angle on a number of different landing gears were measured.

The landing-gear program has been extended to include tests on other types of landing gears, the results of which will be presented in subsequent reports.

APPARATUS AND METHODS

TUNNELS

The 7- by 10-foot wind tunnel, in which a part of the landing-gear drag investigation was made, is fully described in reference 4. The standard force-test model support was used. Tests were made in this tunnel to determine the drag of wheels, the aerodynamic interference between wheels and struts, the drag of the 8.50–10 wheel with various wheel fairings, the drag of half of landing gear 2a with various modifications, and the drag of the 8.50–10 wheel and half of landing gear 2a in yaw.

The 20-foot propeller-research wind tunnel, in which the remainder of the tests were made, is described in reference 5. The method of supporting the test setups on the balance is shown in figure 1. Tests were made in this tunnel to determine the drag due to landing gears used in conjunction with a fuselage, wings, and a radial air-cooled engine.

TEST MODELS

All models tested were designed for an airplane of 3,000 pounds gross weight because full-scale models corresponding to this weight were the largest that could be conveniently accommodated in the tunnels used for the testing.

Wheels.—The five different wheels and tires used in the tests were: An 8.50–10 low-pressure wheel and tire; a 27-inch streamline wheel and tire; a 25 by 11–4 extra-low-pressure wheel and tire; a 30 by 5 disk wheel with a 30 by 5 high-pressure tire; and a 30 by 5 disk wheel with a 32 by 6 high-pressure tire. (See fig. 2) The 2 wheels with the high-pressure tires were taken from service; the other 3 were wooden models

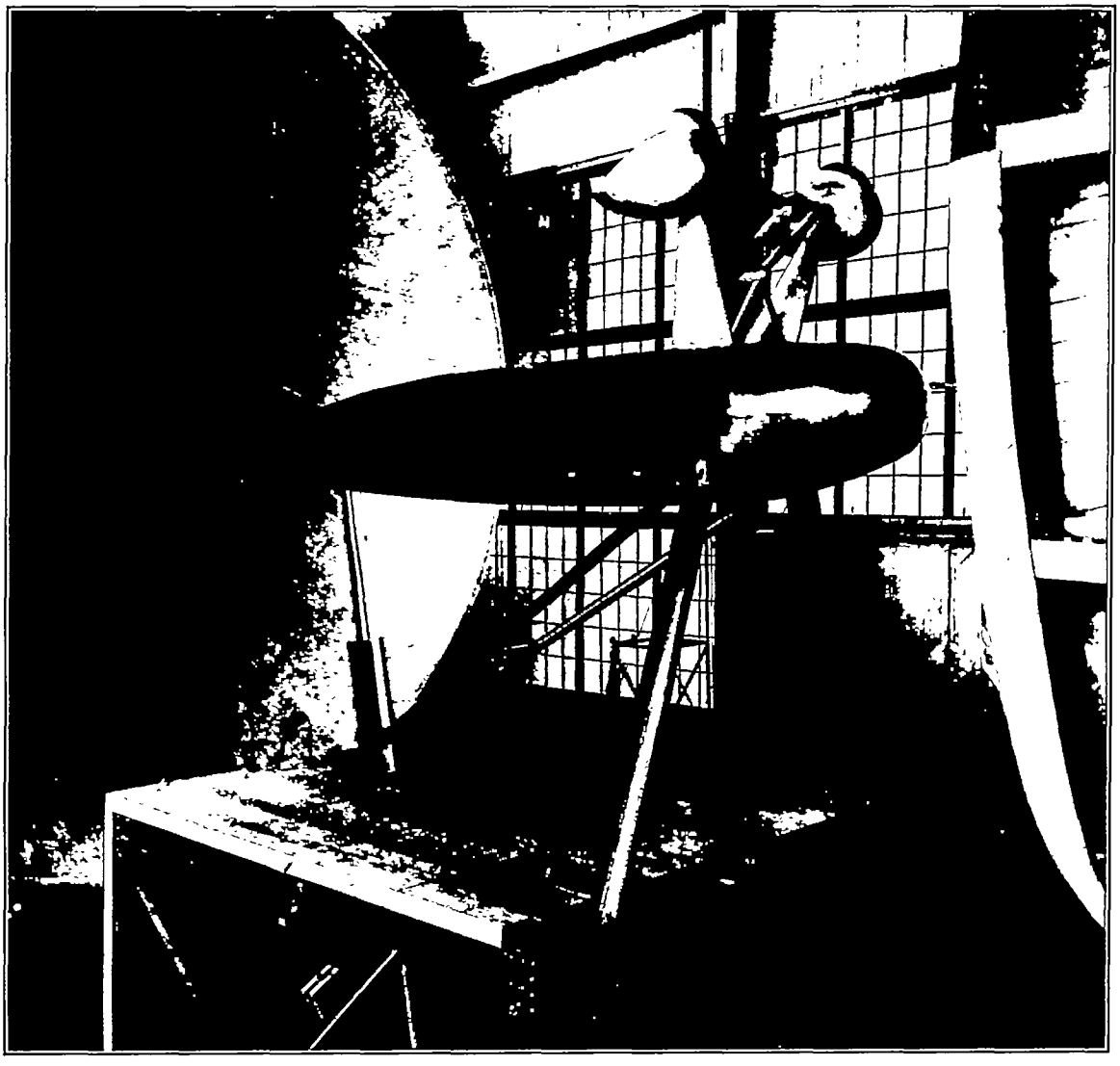

FIGURE 1.—Landing gear 3b with wheel fairing A mounted on test fuselage.

made to a tolerance of ± 1/32 inch. All tires had smooth treads.

Wheel fairings.—The wheel fairings were designated by letters A to F, inclusive, with numerals added when necessary to indicate modifications to the basic form. (See figs. 4 to 9.) Fairings A, B, and C differ only in cross section; fairing D differs in cross section and has a cut-out in the side equal to the tire diameter (8.50–10 wheel and tire); fairing E consists of a short tail and a small fairing that partly covers the inside of the wheel; and fairing F covers only a small portion of the inside of the wheel. All the fairings were made from sheet aluminum.

Fuselage, wings, and engine.—In order to conform with the other models, the fuselage used in conjunction with the landing-gear tests was constructed to the average fuselage dimensions of an open-cockpit airplane of 3,000 pounds gross weight. (See fig. 17.)

Two rectangular wings of Clark Y section were attached to the fuselage for part of the tests. A 4½- by 15-foot wing was used to simulate the lower wing of a biplane cellule and a 6- by 18-foot wing was used to represent the wing of a low-wing monoplane. A Wasp radial air-cooled engine, cowled and uncowled, was used during some of the tests to determine its effect on the landing-gear drag. The relative location of the fuselage, the engine, the wings, and the landing gears is shown in figures 17 and 40.

Landing gears.—The landing gears numbered 1a to 11b (see figs. 18 to 34) were attached directly to the fuselage. Gears 12 to 14c (figs. 35 to 39) were attached to the fuselage and the 6- by 18-foot wing.

All landing gears were designed to comply with the requirements of the Aeronautics Branch, Department of Commerce. Design outside dimensions were strictly adhered to in the fabrication of the various parts. Although information concerning the relative weights of the landing gears would be of considerable interest, any attempt at weight analysis would be too involved to come within the scope of this report. The standard dimension chosen for the vertical travel of the wheel was 5 inches, and for the wheel tread, 6 feet 6 inches. All round struts were encased in fairings of Navy 1 strut section, fineness ratio 3. In cases where streamlined tubing was used, the tubing was of "standard" section, which is a modification of Navy 1 strut section. In some instances tandem struts were faired together, this being done in accordance with the recommendations of reference 6. A few of the landing gears incorporated wire bracing in their structures. The type of wire used was, in all cases, that commonly referred to as "streamlined" wire, although it is really lenticular in cross section.

The oleo action of all gears was strictly conventional with the following exceptions: Gears 1b, 1c, 2b, 2c, 11a, and 11b, as tested, would have to use an oleo shock absorber in the fuselage with a suitable linkage to give the required wheel travel or have one incorporated in the wheel. Gear 10 would have the oleo shock absorber in the wheel or inside the wheel fairing. Gears 3b, 3c, 13, and 14a would require a splined oleo shock absorber or its equivalent. Gear 12 could have a conventionel oleo strut but the wheel would swing about a point directly in its rear.

TESTS

The only measurements taken during the tests were air speed and drag. The maximum air speed used in the 7- by 10-foot tunnel was 80 miles per hour, that being the maximum obtainable; the maximum speed used in the 20-foot tunnel was 100 miles per hour.

Wheel tests.—The drag of the wheel-and-tire units was measured at air speeds up to 80 miles per hour. Throughout the entire investigation the 8.50–10 wheel and tire was taken as the standard unit because it appeared to be the most commonly used in service. The selection was made solely for comparative purposes.

Aerodynamic interference between wheels and a strut.—The interference drag created by having a wheel and a length of strut in close proximity was determined for all wheels used in the landing-gear investigation. Two different strut sections were used separately for this work; one was of Navy 1 section, 2¼ by 6¾ inches, and the other was of circular section with a diameter of 2¼ inches. Each strut was hinged at the wheel axle and the angle between the wheel and the strut was varied in successive steps from 0° to 90° during the test. The interference drag was obtained by deducting the sum of the wheel drag and the strut drag from the drag of the combination. Figure 3 shows the arrangement of a wheel and strut.

Wheel-fairing tests.—The 8.50–10 wheel and tire was tested with wheel fairings A, B, C, D, and E at air speeds up to 80 miles per hour. All modifications to these wheel fairings as tested alone are shown in figures 4 to 8, inclusive. Check tests were made on most of these models in the 20-foot tunnel at air speeds up to 100 miles per hour.

The 8.50–10 wheel in yaw.—The drag of the 8.50–10 wheel was measured at air speeds up to 80 miles per hour with the wheel yawed in successive steps from 15° to −15°.

Tests on half of landing gear 2a with 8.50–10 wheel.—Tests were made on a complete half of landing gear 2a with the 8.50–10 wheel and wheel fairings A, B, C, D, E, and F with various modifications. Details of all modifications are shown in figures 11 to 16, inclusive. Most of these tests were made in the 7- by 10-foot tunnel at air speeds up to 80 miles per

hour, but a few tests were checked in the 20-foot tunnel at air speeds up to 100 miles per hour.

Half of landing gear 2a in yaw.—One-half of landing gear 2a, equipped with the 8.50–10 wheel, was tested for drag at various angles of yaw at air speeds up to 80 miles per hour. The half gear was yawed in successive steps from 15° to −15°.

Tests at 0° pitch of landing gears mounted on fuselage or fuselage and wing.—Gears 1a to 11b, inclusive, with various modifications, were tested for drag in conjunction with the fuselage alone. Gears 14a, 14b, and 14c were tested in conjunction with the fuselage and 6- by 18-foot wing. All these tests were made at air speeds up to 100 miles per hour. The gears were mounted in the inverted position (fig. 1) to facilitate testing and to remove the gears as far as possible from the influence of the model-supporting structure. Whenever wings were used during the tests, they were set at 0° incidence. The drag of the fuselage, or fuselage and wing, was measured with and without the landing gears attached. The difference between the results was the drag due to the landing gear under test.

Tests at 0° pitch on several landing gears equipped with various types of wheels.—The drag due to landing gears 1b, 3a, 8, and 11b, each equipped with various types of wheel-and-tire units, was measured at air speeds up to 100 miles per hour. These landing gears were chosen because they had a wide diversity of strut arrangement, particularly around the wheel hub. It was hoped that the results would show more generally the effect on landing-gear drag of substituting different wheels of equal weight-carrying capacity.

Tests at various angles of pitch of landing gears mounted on fuselage with and without the 4½- by 15-foot wing and engine.—Landing gears 1a and 11a were tested for drag at various pitch angles from 6° to −5°, on the fuselage alone, on the fuselage with the 4½- by 15-foot wing, on the fuselage with the engine (cowled and uncowled), and on the fuselage with the wing and the engine. These tests were made to ascertain the effects of the different combinations on the drag, due to the landing gears, at air speeds up to 100 miles per hour.

Tests at various angles of pitch of landing gears mounted on fuselage and 6- by 18-foot wing.—Gears 12, 13, 14a, 14b, and 14c, which were designed for use on low-wing monoplanes, were tested for drag in conjunction with the fuselage and the 6- by 18-foot wing at various pitch angles from 6° to −5° at air speeds up to 100 miles per hour.

Gear 14c was later tested in conjunction with the fuselage, the 6- by 18-foot wing, and the engine (cowled and uncowled) to get the added effect of the engine upon the drag due to this gear.

PRECISION

It is estimated that the drag of wheels alone, wheel fairings, and one-half of gear 2a with its various modifications, was measured with a precision of ±0.1 pound. Landing-gear tests made in conjunction with the fuselage alone are estimated to be precise within ±0.5 pound, while tests made in conjunction with the fuselage, wing, and engine at various angles of pitch are estimated to be precise within ±1.0 pound.

RESULTS AND DISCUSSION

All drag values presented in this report were taken from faired curves of drag plotted against dynamic pressure. In cases where check tests were made in the 20-foot tunnel on the results obtained in the 7- by 10-foot tunnel, drag values are given for both 80 miles per hour and 100 miles per hour. In all other cases the values are given for only one air speed. For convenience, all the drag data presented in tabular form are included on the figures illustrating the corresponding test models. Results of interference tests, yaw tests, and landing-gear tests made in conjunction with wings and engine at various pitch angles, are presented in curve form for ease of comparison.

The results of tests made in the 7- by 10-foot tunnel were corrected for horizontal pressure gradient in the usual manner. It was not necessary to apply any corrections to results obtained in the 20-foot tunnel because the pressure gradient was negligible. An agreement of ±0.1 pound drag at 80 miles per hour was obtained between the results of check tests made in the two wind tunnels after the horizontal pressure-gradient correction had been applied.

Wheel tests.—Table I and figure 2 show the comparative drags of all the wheels tested alone. It is of interest to note that the 27-inch streamline wheel and tire has appreciably less drag than any other type tested, and that the 25 by 11–4 extra-low-pressure wheel and tire has the highest drag recorded. The effect of all these wheels upon the drag due to several different landing gears will be shown later in the report.

Aerodynamic interference between a wheel and strut.—Figure 3 shows the variation of interference drag between the different wheels and a single strut (streamline and round) alongside the wheel, as the angle between the two is varied from 0° to 90°. The interference drag generally increases as the wheel and strut are brought together. The 27-inch streamline wheel and tire is affected the most by the proximity of the strut.

Wheel-fairing tests.—The drags of the 8.50–10 low-pressure wheel and tire with various types of wheel fairings are given in table II and figures 4 to 9. From

these results it appears that a wheel fairing such as A, which covers both sides of the wheel and has a minimum of cross-sectional area, is the best basic type. It is also apparent from tests of modifications of this fairing (A_1 and A_2) that the portion of the wheel or tire that protrudes from the bottom of the fairing is responsible for most of the drag. As much as 72 percent of the drag of the 8.50–10 wheel and tire may be saved by totally encasing it in a fairing such as modification A_2 of wheel fairing A. It is also interesting to note from the tests of wheel fairing D, which has a cut-out in the side as large as the tire diameter, that no saving in drag will be effected unless the side of the cut-out nearest the tail of the fairing is turned in so as to present no open edge to the air stream (modification D_1). In fact, the drag of the wheel was increased by the use of the unmodified fairing D. No tests were made on ordinary mud guards because previous tests made in Great Britain showed that they have high drag (reference 7).

The 8.50–10 wheel in yaw.—Figure 10 shows how the drag of the 8.50–10 wheel changes with variations in angles of yaw. The drag of this wheel is almost doubled when it is yawed 15°. Such data are of practical interest because many ordinary types of nonretracting landing gears have the wheels in yaw when the oleo strut is extended. Also, there are some types of partially retracting gears that have the wheel yawed, when in the retracted position, and as much as half of it exposed to the air stream.

Tests of one-half landing gear 2a with 8.50–10 wheel and various wheel fairings.—The results of the tests of half of landing gear 2a are given in table III and on the figures 11 to 16, inclusive. The purpose of this part of the investigation was to determine whether the relative merits of the fairings as tested alone were affected by the combination of the fairings with landing-gear struts. For these tests all the fairings except A (modifications A_1 and A_2), which were not believed to be practicable, were used. Reference to the table and figures will show that fairing A, which had lower drag than fairing C when tested alone, had to be modified considerably around the strut intersection to give as low drag as fairing C when both were combined with the landing-gear struts. It is also interesting to note in the case of fairing E (fig. 15) that modifications E_1 and E_2 were the most effective in reducing the drag.

Yaw tests of one-half landing gear 2a with 8.50–10 wheel.—Figure 10 shows how the drag of one-half gear 2a varies with angle of yaw. A comparison of these data with those for the 8.50–10 wheel alone, will show that with changes in yaw, most of the drag increase of half gear 2a is due to the increase in drag of the wheel. The fact that the struts are at angles of attack other than 0° accounts for very little of the increase in drag.

Measurement of drag due to various types of landing gears with 8.50–10 wheels, 0° pitch.—Table IV and figures 18 to 31, 34, and 37 to 39 contain the results of tests of various landing-gear types, all of which were made in conjunction with the fuselage. Reference to the figures will show the differences in strut arrangements. It should be pointed out that although all struts were of streamline section the fittings were left exposed. When wires were used the fittings were also left exposed. It is interesting to note that the substitution of streamline wires for streamline struts in the cases of gears 1b and 1c (fig. 19) and gears 2b and 2c (fig. 21) had little effect on the drag. The results obtained with gears 3b and 3c (figs. 24 and 25) indicate that little is saved when struts in tandem, close to the side of a wheel, are faired together. The relatively high drag due to landing gear 7 (fig. 29) shows that it is not good practice to place a length of strut close to the side of a fuselage. The results for landing gear 11b (fig. 34) indicate that this type has small interference drag. The drag of the wheels alone is approximately 19.5 pounds at 100 miles per hour, which leaves but 4 pounds interference and strut drag.

Effect of various wheels of equal load-carrying capacity on the drag due to landing gears.—The results of these wheel tests are given in table V and the figures illustrating gears 1b, 3a, 8, and 11b. Gears 1b, 3a, 8, and 11b (figs. 19, 23, 30, and 34) were chosen for this part of the investigation because they covered a representative range of gear structure on which the effects of the various types of wheels could be generally shown. It is important to note that low-pressure or extra-low-pressure wheels and tires may be used on ordinary types of landing gears with little or no increase in drag. Also, the 27-inch streamline wheel and tire, which had the lowest drag when tested alone, gave higher landing-gear drag values than the 8.50–10 wheel and tire, except in the case of gear 11b. The 27-inch streamline wheel and tire is distinctly superior on this latter type of gear. The results indicate that the 27-inch wheel and tire will not decrease landing-gear drag unless the aerodynamic interference between it and adjacent members is very small. This size of streamline wheel and tire was used because, at the time this investigation was started, the manufacturers recommended it for use on commercial types of airplanes. However, the 24-inch and the 21-inch may be used for airplanes of 3,000 pounds gross weight if the inflation pressure is increased sufficiently. If tests had been made with the smaller wheel-and-tire units they undoubtedly would have shown up more favorably than the 27-inch in all cases. An extension of

the entire landing-gear research program is contemplated in which tests will be included of the 24-inch and the 21-inch streamline wheel-and-tire units.

Effect of wings, engine, and angle of pitch on the drag due to landing gears.—Figure 41 shows the effects of the 4½- by 15-foot wing, the engine (cowled and uncowled), the combination of both, and changes of pitch angle upon the drag due to landing gears 1a and 11a. The effect of the engine alone on both gears was to generally increase the drag with increases in angle of pitch. The wing alone had an opposite effect. The effect of the combination of wing and engine was to cancel generally the individual effects. It made little difference whether or not the engine was cowled. The engine-and-wing combinations lowered the drag of the high-drag gear (gear 1a) noticeably over the result obtained with the fuselage alone. This difference was negligible in the case of the low-drag gear (gear 11a). The curves on figure 41 indicate that no specific conclusions may be drawn from these data since no definite trends were evidenced. The data are presented to show the factors that may affect landing-gear drag but do not include propeller-slipstream effect.

Figure 42 illustrates how the drag due to landing gear 12, which was mounted on the fuselage and the 6- by 18-foot wing, varies with angle of pitch. This type of gear has been commonly used in recent years on airplanes that have the landing gear incorporated in the wing truss. The results show that the drag due to this gear and its component parts decreases with increases of pitch angle.

The effect of changes in pitch angle on the drag due to gear 13, with its various modifications, is shown in figure 43. This gear was mounted on the fuselage and the 6- by 18-foot wing. The general effect of increasing the pitch angle was to decrease the drag due to the gear. Modification 2 gave a much steeper slope to the curve of drag against angle of pitch than did modification 1.

Figure 44 shows the variation of the drag due to gears 14a, 14b, and 14c with changes in pitch angle. The effects of the radial engine, cowled and uncowled, on gear 14c and of wheel fairing C on gear 14a are also shown on this figure. Again the drag due to the gears decreased with increases of pitch angle. This decrease was probably due to the decrease in air velocity around the under surface of the 6- by 18-foot wing that occurred as its angle of attack was increased. The effect of the cowled and uncowled engine upon gear 14c was to increase appreciably the drag due to it. The reason for the increase is not readily understood, especially since the engine did not have a similar effect upon the drag due to gears 1a and 11a. Although the latter two gears were tested in conjunction with the 4½- by 15-foot wing and engine and gear 14c was tested with the 6- by 18-foot wing and engine, the most significant difference between the test set-ups was in the wheel treads. It so happened that gears 14a, 14b, and 14c were designed with a tread of 7 feet 8½ inches instead of the standard tread of 6 feet 6 inches used for all other landing gears. This divergence from the standard was caused by structural difficulties encountered in the design of the test set-ups. Inasmuch as the wheels of gear 14c were 1 foot 2½ inches farther apart than those of gears 1a and 11a, it is thought that perhaps the air flow in this outer region could have been influenced by the engine in such a manner as to have higher velocity at that point than at the location of the wheels of gears 1a and 11a. If this be true, the drag due to any gear of the chosen standard tread and height would not necessarily be increased by the presence of an engine mounted as in this investigation. However, the reason for the increase in drag due to landing gear 14c when the engine was present should be found and the problem will receive attention in the proposed program for future landing-gear research.

Effect of various modifications on the drag due to landing gears, 0° pitch.—The effect of modifying each of a number of different landing gears is shown in table VI and figures 23 to 25, 29, 30, and 32 to 37. In order to have a better understanding of the various modifications made, it is necessary to refer to the figures. Inasmuch as the table and the figures contain all the pertinent facts and a summary of results, little need be said here in discussion of the modifications. The addition of wheel fairing C to landing gear 3a resulted in a decrease in the drag due to that gear of approximately 23 percent, which is a very substantial saving. Attention is called to landing gears 3b and 3c, which are structurally identical, differing only in the manner in which the side struts are faired. Gear 3b, which had the side members faired together, had a drag of 44 pounds at 100 miles per hour in its original condition. By successive modifications this drag was reduced to 27 pounds. The biggest saving was effected by the use of wheel fairings. The strut fairing on gear 3c was stripped from each individual member until nothing but round struts and the wheels were exposed to the air stream. In this condition the drag due to the gear was 98 pounds at 100 miles per hour. The results of these tests clearly show that the drag may vary from 27 pounds to 98 pounds at 100 miles per hour for a gear of this type, and indicate the importance of fairing struts as well as wheels. Modifications to landing gears 8 and 14a also show the importance of wheel fairings for reducing drag.

Tests on gears 10 and 12 show the importance of fairing the wire terminals. By so doing, 2.5 pounds drag out of 27.0 pounds were saved on gear 10. In

the case of gear 12, where the wires helped form a combination wing and landing-gear truss, 6 pounds drag were saved by fairing the wire fittings. It should be noted that on this same gear the wires and wing-brace struts accounted for more than half the drag due to the complete landing-gear unit.

Tests of gears 11a and 11b, which have single cantilever struts from the fuselage to the wheel, indicate the superiority of these types as far as drag is concerned. There is little to choose between the lowest drag figures of these two landing gears. The lowest drag recorded for gear 11a was 18.5 pounds at 100 miles per hour, while the lowest for gear 11b was 17.5 pounds at 100 miles per hour. If modifications A_1 and A_2 were applied to wheel fairing A as used on gear 11b, it is probable that the drag due to that gear could be reduced to approximately 14 pounds and 11 pounds, respectively, at 100 miles per hour. It is possible to use such modifications to a service-type landing gear provided that suitable mechanical arrangements are made on the wheel fairings to give the ground clearance necessary for wheel operation. Tests made on these two gears with the 8.50–10 low-pressure wheels and 27-inch streamline wheels without wheel fairings indicate that the lowest drag was obtained by using the latter wheels. However, it is also clear that even though a low-drag landing gear might be had without wheel fairings, the drag may be further reduced by an appreciable amount if the proper wheel fairings are used.

Landing gear 13 was attached to the 6- by 18-foot wing and had a single strut extending from the wing to a fork over the wheel. The strut was streamlined and the wheel encased in wheel fairing A, with no fillet around the wheel-fairing and strut intersection. The results show a drag of 20 pounds at 100 miles per hour with the gear in this condition. Modification 1, which was an expanding fillet, was made at the strut and wheel-fairing intersection, and the drag due to the gear dropped to 13 pounds. Modification 2, which was a continuation of the wheel fairing to the wing, was made and the drag was again reduced to 13 pounds at 100 miles per hour, despite the large increase in cross-sectional area. The drag due to this gear might be further reduced to approximately 7 or 8 pounds at 100 miles per hour if the wheels were entirely encased in a fairing such as modification A_2 of wheel fairing A.

Analysis of landing-gear drag.—The results of the analysis of landing-gear drag are presented in tables VII–A and VII–B, in which all the landing gears tested are classified according to structural types. Table VII–A deals with gears designed for attachment to the fuselage; table VII–B deals with gears designed for attachment to the wing or wing and fuselage. An attempt was made under each classification to isolate the drag due to the wheels or wheels with wheel fairings, to struts, and to fittings plus interference. The drag due to these parts and to fittings plus interference is also presented in percentage of the total measured drag. A ratio of measured drag to computed drag is included for use by designers in evaluating the drag of any type of gear, having given the drag of the component parts. The entire analysis is based on gear drag at 0° pitch angle and excludes the effects due to the engine and the 4½- by 15-foot wing.

Reference to the tables will show that for all types of gears the computed strut drag constitutes from 12 percent to 20 percent of the total measured drag due to the gears. The wheels or wheels with wheel fairings, as tested alone, constitute from 40 percent of the drag due to the gears for the multistrut types to about 70 percent for the single-strut types. Fitting-plus-interference drag varies from about 44 percent of the total measured drag due to gears of the multistrut types to negative or favorable interference drag for the single-strut types.

Some calculations showing the effect of 2 types of landing gears on the performance of 2 classes of airplanes.—A comparison is made in table VIII of the high speeds of 2 hypothetical airplanes, 1 of low drag and the other of high drag, each with and without a low-drag and a high-drag landing gear (gear 13, modification 1, and gear 14c. The table shows that even though landing gear 14c were made to retract fully into the high-drag airplane the gain in high speed would be only 3 miles per hour. However, retracting the same gear on the low-drag airplane would result in an increase in speed of 18.9 miles per hour, or a saving of 23.4 percent of the thrust horsepower at the same speed. Retracting gear 13 (modification 1) used on the low-drag airplane would result in an increase in speed of only 8.6 miles per hour. Whether or not the 8.6 miles per hour increase in speed due to a retractable gear over gear 13 is worth the design and structural complications in all cases is a question that can be solved only by the designers of airplanes. Attention is called to the fact that all landing-gear drag data used in these comparisons were scaled up from results at 100 miles per hour with no allowance for the effect of Reynolds Number.

Some calculations comparing a wire-braced wing and landing-gear unit with a cantilever wing and landing-gear unit.—Figure 45 shows the results of this comparison. The calculations are based on wing data taken from reference 8, and on landing-gear drag data scaled from results at 100 miles per hour with no allowance for the effect of Reynolds Number. Inasmuch as the wire bracing on landing gear 12 also constitutes a part of the wing bracing, any rational comparison of this gear with any other gear must take into account the

wing system. It was considered of sufficient interest to compare gear 12 mounted on a conventional Clark Y rectangular wing with gear 13 (modification 1) mounted on a cantilever Clark Y wing, tapered in plan form and section. Although the selection of the types of wings as well as the wing areas may affect the results somewhat, it is believed that the wings selected will show in a general way the relative merits of the two units. In the figure the drag of each wing and landing gear is plotted against velocity, the angle of attack being determined by the wing loading. Curves are also given for the complete landing-gear and wing units. It should be noted that the drag of the wires on gear 12 was computed instead of taken from the tests on that gear because the wire truss used on the test set-up had insufficient span for the purposes of this comparison. Brace struts were not used on this gear and all wire fittings were assumed to be hidden. The figure shows the superiority of the cantilever wing and landing-gear unit over the wire-braced unit, although the difference is not great.

A general relationship applicable to landing gears, showing the effect of parasite drag on the high speed of airplanes.—Figure 46, which is a convenient chart for showing the relationship between a change in parasite drag and the resulting change in the high speed of an airplane, is included to simplify the calculation of the high-speed change of an airplane due to a change in landing-gear drag. The chart is applicable to any conventional airplane and is considered to be fairly accurate, the assumptions being that the thrust horsepower and drag coefficient of the airplane are constant for small changes in angle of attack at the high-speed condition. The chart shows that landing-gear drag must be appreciably reduced to result in much gain in the high speed of an airplane. Of course, a percentage change in high speed shows more gain in miles per hour for a high-speed airplane than for a low-speed airplane. Furthermore, the landing gear of a high-speed airplane is likely to constitute a greater percentage of the total drag than that of a low-speed airplane because high-speed airplanes necessarily have low drag. This point is also illustrated in the example given in table VIII.

Application to design.—In using the results presented in this report for air speeds greater than 100 miles per hour the question may arise concerning the effect of Reynolds Number on the drag values. Since the drag, in general, varied closely as the ratio of the squares of the air speeds for speeds less than 100 miles per hour, it can only be assumed that this relation holds for higher speeds. Until tests at higher Reynolds Number can be made the values of drag at 100 miles per hour should be used, whenever possible, as a basis for computing the values at higher speeds. This matter is of most importance as regards quantitative estimates of the drag of landing gears at high speeds, there being only a small likelihood that the order of merit of the different gears will be changed appreciably at high speeds.

CONCLUSIONS

From the data presented in this report the following conclusions are made:

1. The interference drag between a single strut alongside a wheel and the wheel generally increases as the angle between them is decreased.
2. The interference drag between a single strut and a low-drag wheel is markedly higher than the interference drag between a strut and a high-drag wheel. If low-drag wheels are used to reduce landing-gear drag, it is necessary that the aerodynamic interference between the wheels and adjacent members be small, otherwise there will be no reduction in drag.
3. The drag of the combination of a wheel and wheel fairing is due, in a large measure, to that portion of the wheel which protrudes from the fairing.
4. Wheel fairings with cut-outs in the side should have all free edges that face the wind turned in.
5. The increase in drag of a tripod landing gear in yaw is due mostly to the increase in drag of the yawed wheels.
6. The lowest-drag wheel fairing tested gave very little reduction in drag when used on landing gears of the tripod type, unless properly modified to reduce aerodynamic interference.
7. Low-pressure and extra-low-pressure wheels and tires may be used on ordinary types of landing gears, with little or no increase in drag.
8. Landing-gear struts should not be placed close to the side of a fuselage because of the high interference drag created.
9. The drag of landing gears of the more common types may be greatly reduced by careful fairing of fittings, wheels, and strut intersections.
10. It is possible to design a landing gear of reasonably low drag without using wheel fairings.
11. The average fitting-plus-interference drag of ordinary types of landing gears is approximately 44 percent of the drag due to these gears.
12. The combination of a cantilever wing and cantilever landing gear appears to have less drag than the combination of a wire-braced wing and gear in which the landing gear is a part of the wing truss.
13. The substitution of low-drag or retractable landing gears for conventional gears on high-drag airplanes will result in only a small increase in high speed. For low-drag airplanes, the substitution of low-drag or retractable landing gears for conventional gears will result in a substantial increase in high speed

or saving in power, the low-drag gear accomplishing a large percentage of the gain obtainable from the use of the retractable gear.

LANGLEY MEMORIAL AERONAUTICAL LABORATORY,
NATIONAL ADVISORY COMMITTEE FOR AERONAUTICS,
LANGLEY FIELD, VA., *February 9, 1934.*

REFERENCES

1. Weick, Fred E.: Full Scale Drag Tests on Various Parts of Sperry Messenger Airplane. T.N. No. 271, N.A.C.A., 1928.
2. Herrnstein, William H., Jr.: Full Scale Drag Tests on Various Parts of Fairchild (FC-2W2) Cabin Monoplane. T.N. No. 340, N.A.C.A., 1930.
3. DeFrance, Smith J.: The Aerodynamic Effect of a Retractable Landing Gear. T.N. No. 456, N.A.C.A., 1933.
4. Harris, Thomas A.: The 7- by 10-Foot Wind Tunnel of the National Advisory Committee for Aeronautics. T.R. No. 412, N.A.C.A., 1931.
5. Weick Fred E., and Wood, Donald H.: The Twenty-Foot Propeller Research Tunnel of the National Advisory Committee for Aeronautics. T.R. No. 300, N.A.C.A., 1928.
6. Biermann, David, and Herrnstein, William H., Jr.: The Interference between Struts in Various Combinations. T.R. No. 468, N.A.C.A., 1933.
7. Bradfield, F. B., and Midwood, G. F: Wheels, Fairings and Mudgards. R. & M. No. 1479, British A.R.C., 1932.
8. Anderson, Raymond F.: The Aerodynamic Characteristics of Three Tapered Airfoils Tested in the Variable-Density Wind Tunnel. T.N. No. 367, N.A.C.A., 1931.

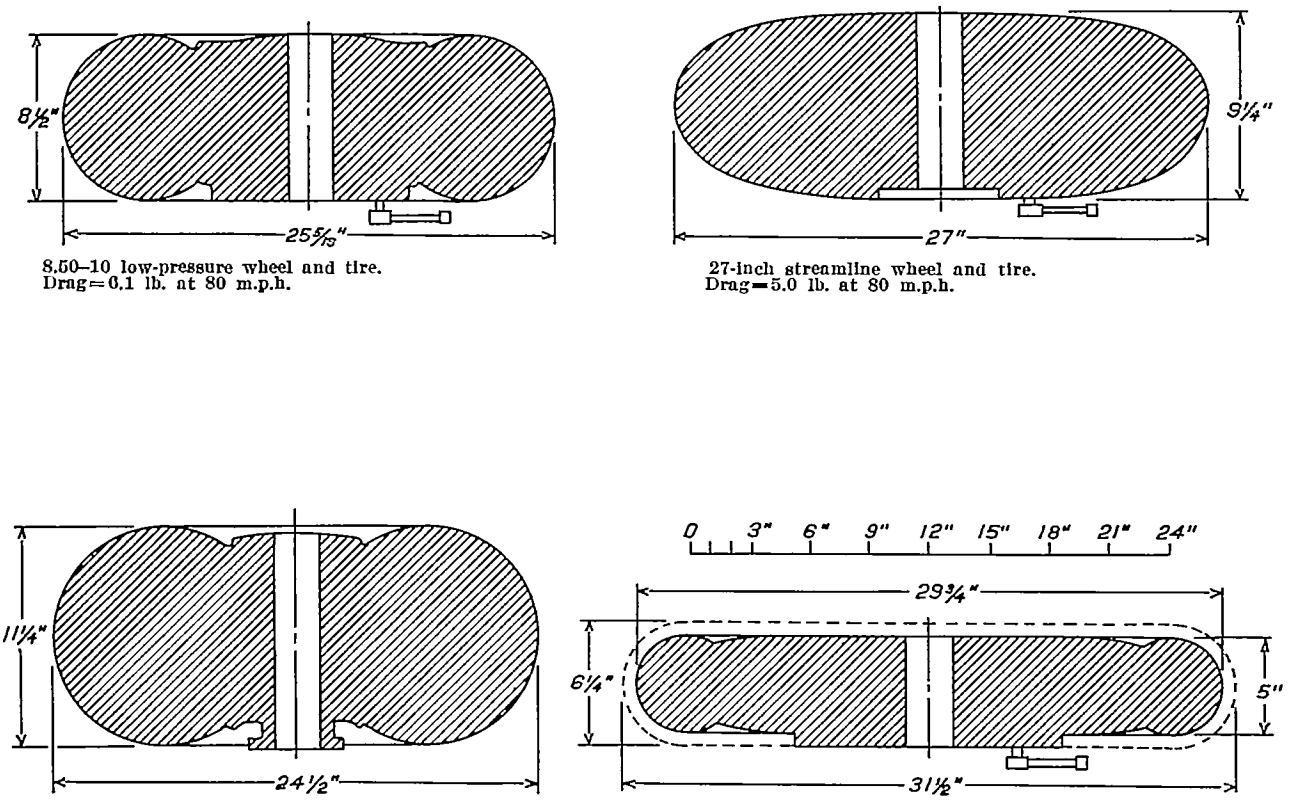

FIGURE 2.—Drag and dimensions of wheels.

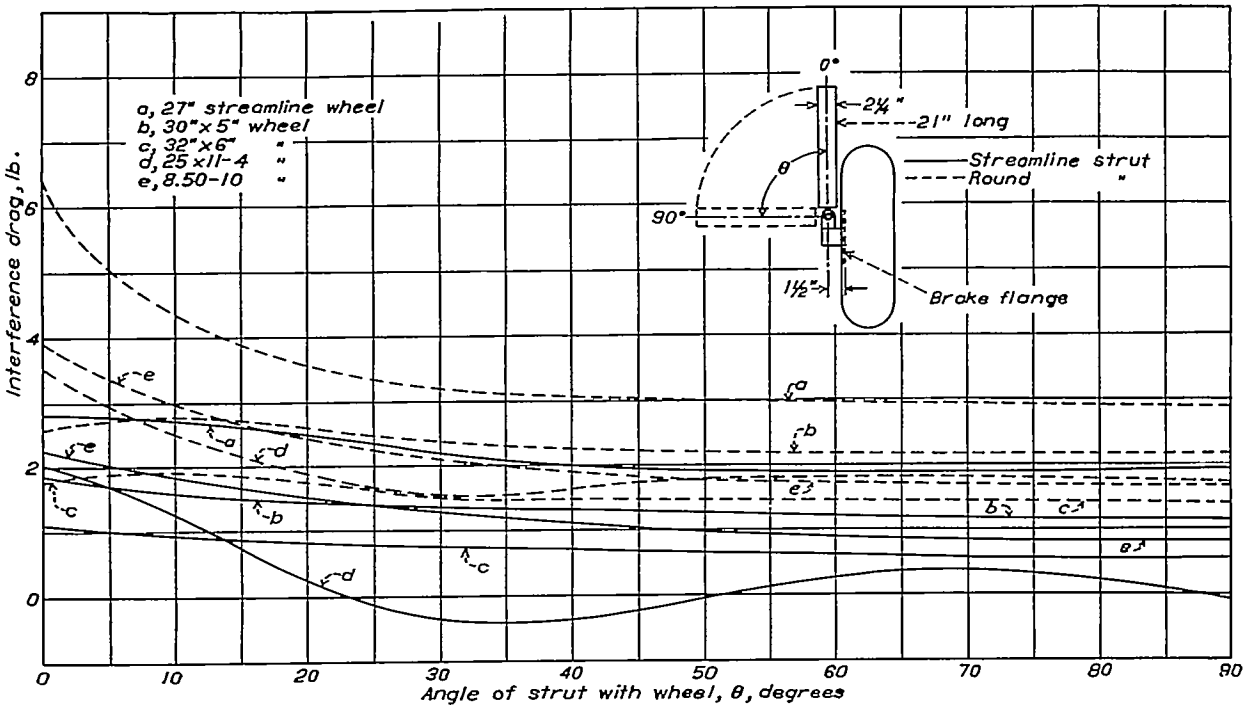

FIGURE 3.—Interference drag between strut and wheel.

NOTE.—Streamline strut of Navy 1 section and fineness ratio 3. Air speed, 80 m.p.h.

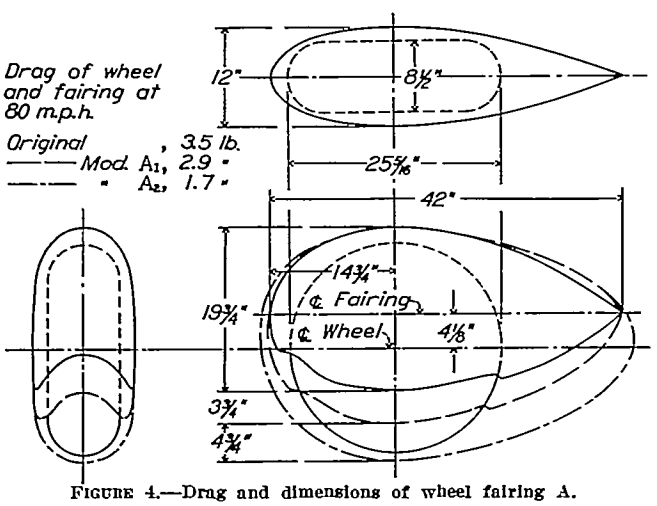

FIGURE 4.—Drag and dimensions of wheel fairing A.

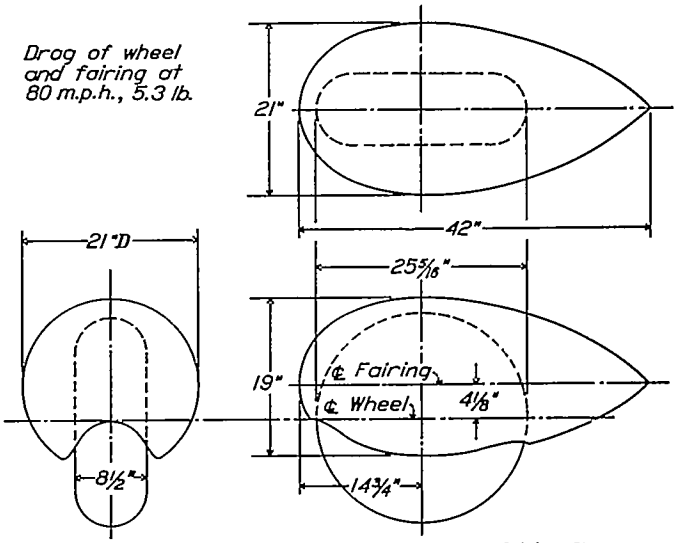

FIGURE 5.—Drag and dimensions of wheel fairing B.

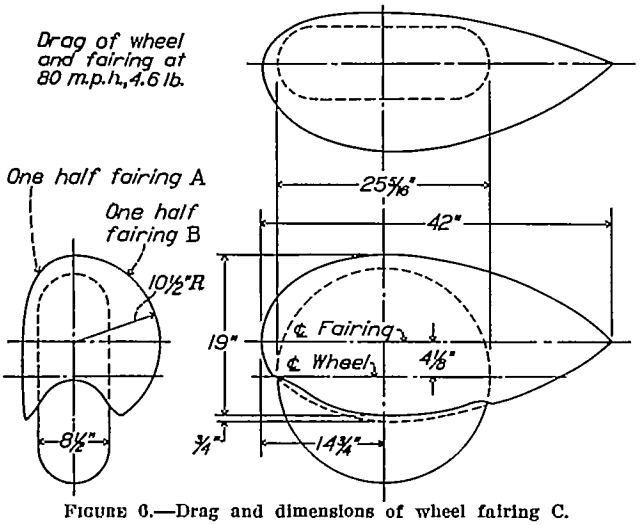

FIGURE 6.—Drag and dimensions of wheel fairing C.

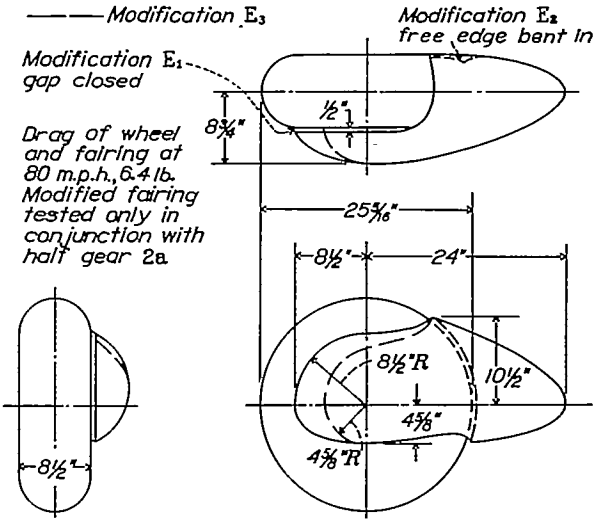

FIGURE 8.—Drag and dimensions of wheel fairing E.

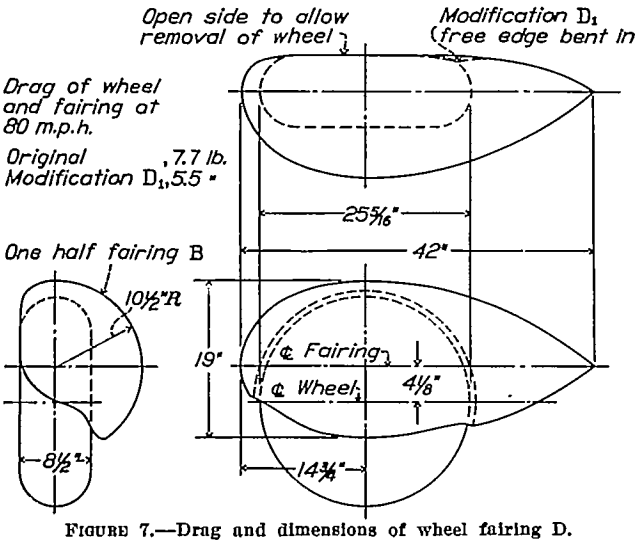

FIGURE 7.—Drag and dimensions of wheel fairing D.

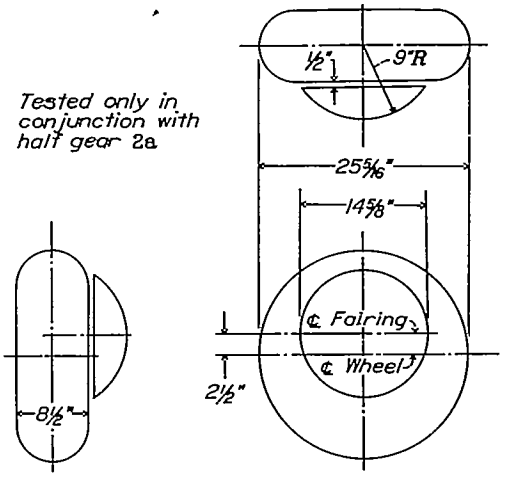

FIGURE 9.—Dimensions of wheel fairing F.

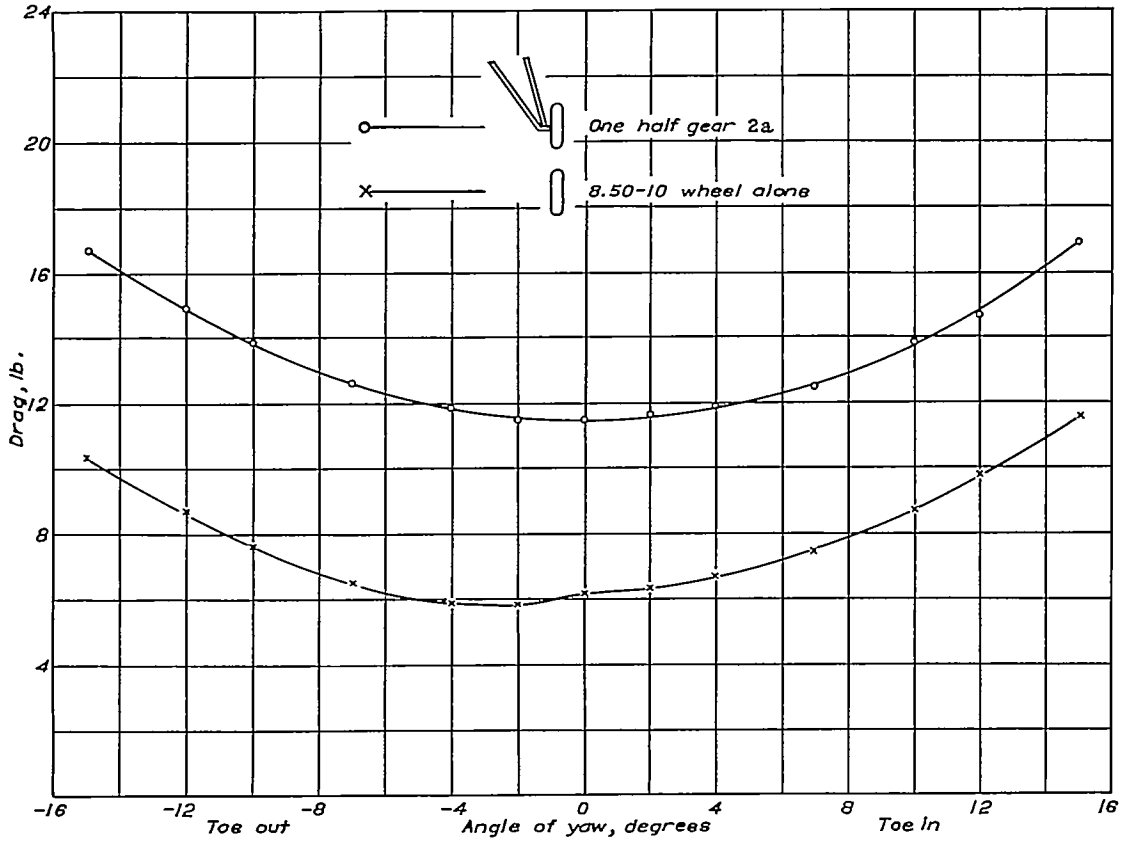

FIGURE 10.—Drag of 8.50–10 wheel and one-half gear 2a in yaw. Air speed, 80 m.p.h.

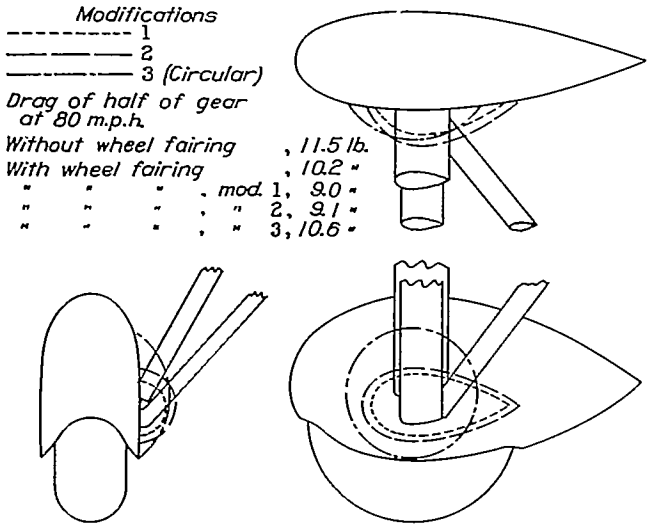

FIGURE 11.—Drag of one-half gear 2a with wheel fairing A.

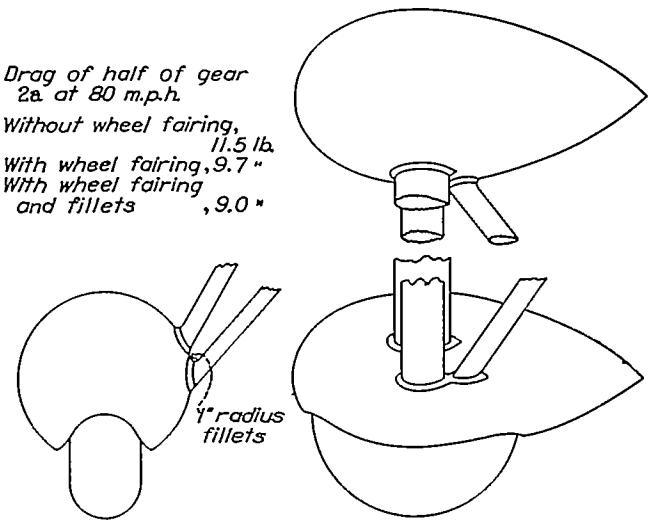

FIGURE 12.—Drag of one-half gear 2a with wheel fairing B.

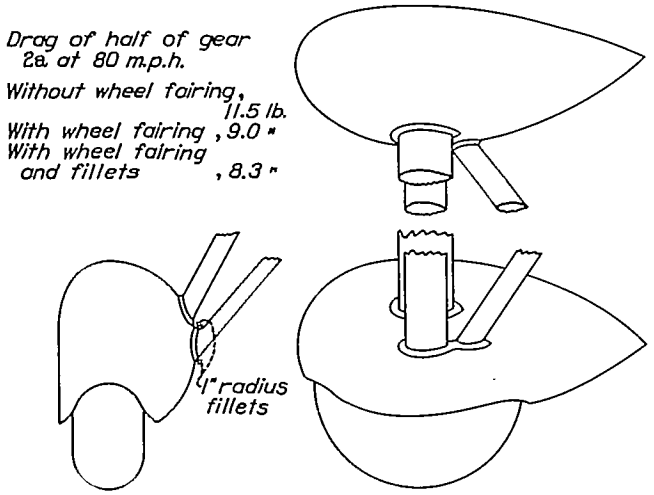

FIGURE 13.—Drag of one-half gear 2a with wheel fairing C.

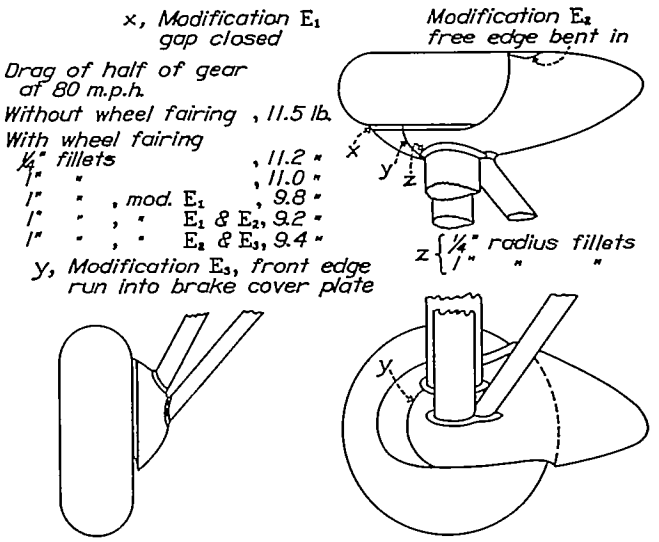

FIGURE 15.—Drag of one-half gear 2a with wheel fairing E.

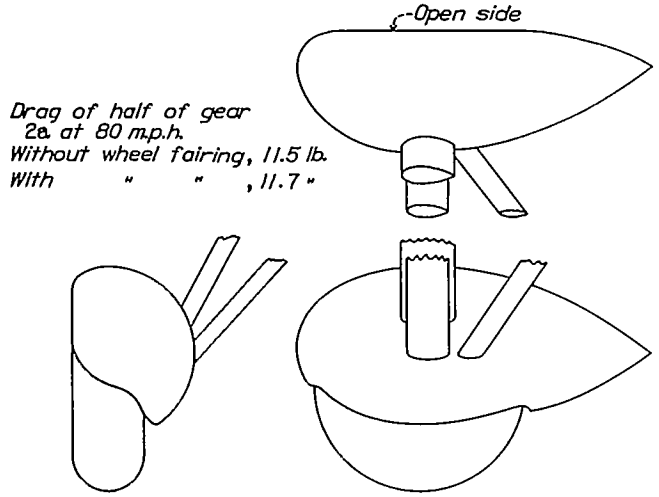

FIGURE 14.—Drag of one-half gear 2a with wheel fairing D.

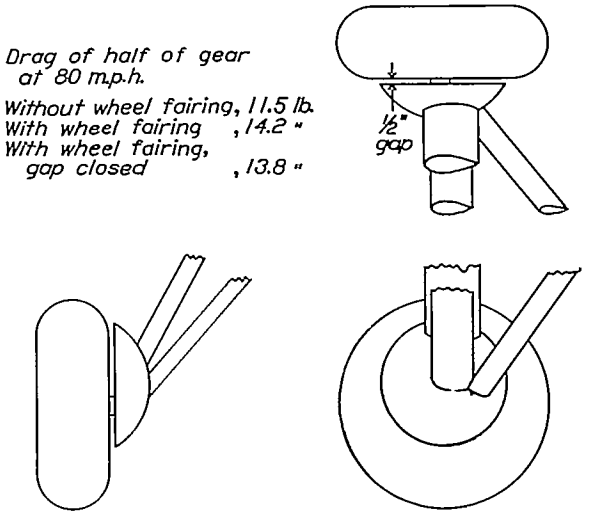

FIGURE 16.—Drag of one-half gear 2a with wheel fairing F.

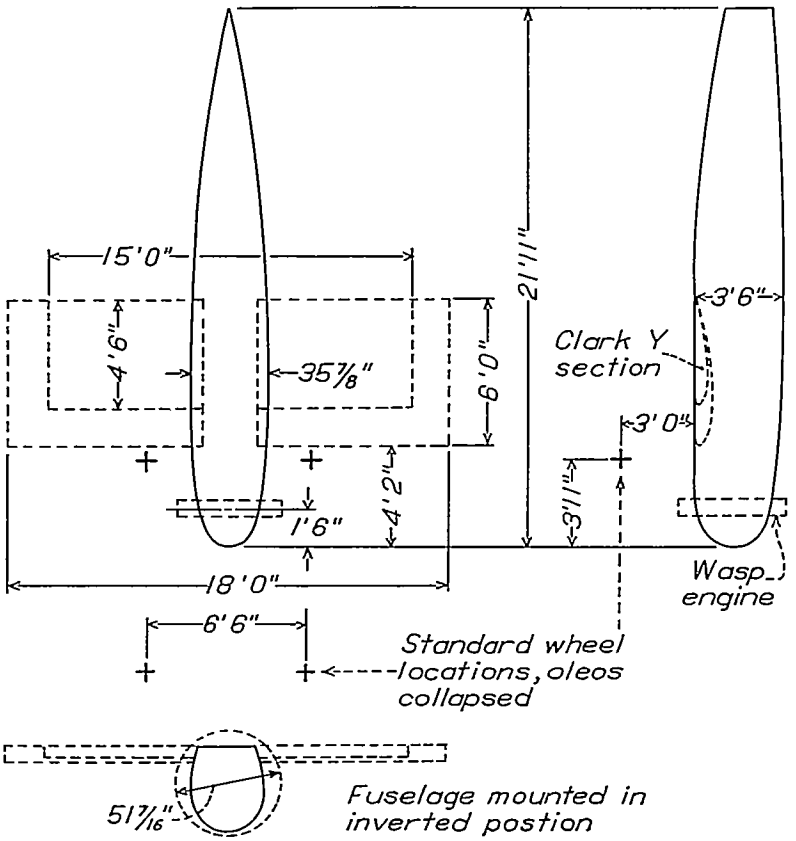

FIGURE 17.—Sketch of fuselage showing locations of wings, wheels, and engine.

NOTE.—All gears designed for 6- by 18-foot wing have the wheel locations 13⅛ inches to the rear of standard locations. The tread of gears 14a, 14b, and 14c is 7 feet 8½ inches.

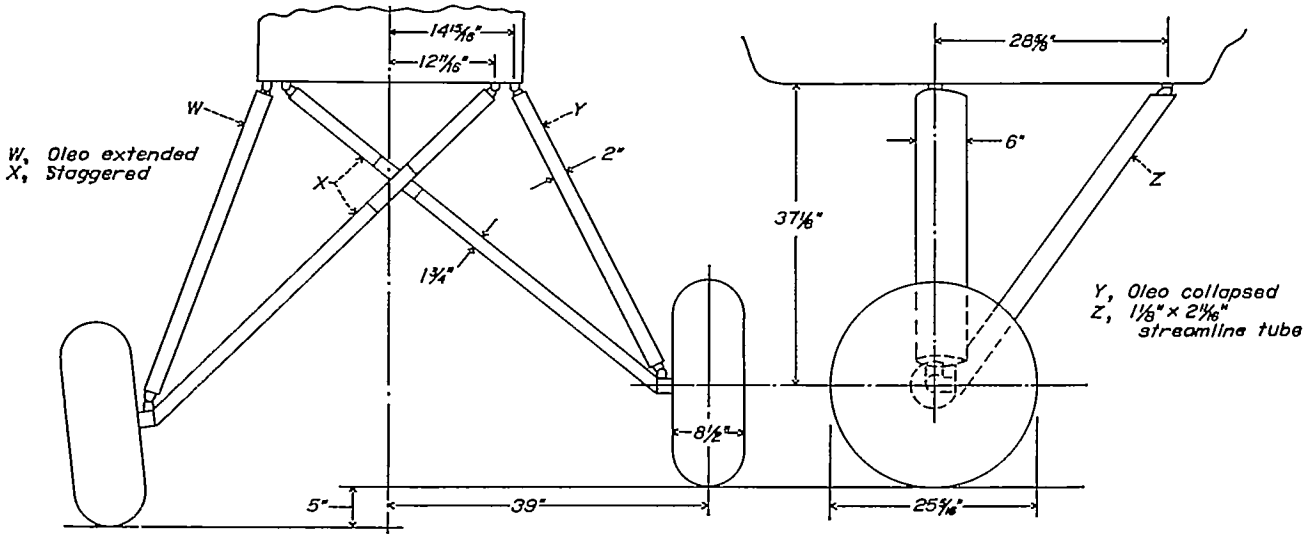

FIGURE 18.—Drag and dimensions of gear 1a.

Drag of gear at 100 m.p.h. (oleos extended): 8.50–10 wheels, 42.5 pounds.

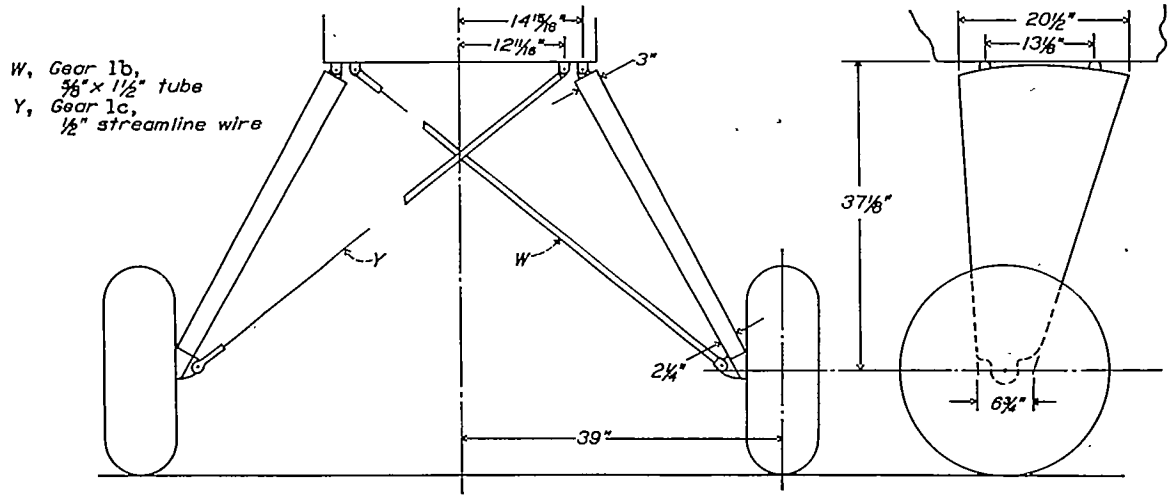

FIGURE 19.—Drag and dimensions of gears 1b and 1c.

Drag of gears at 100 m.p.h.	*Pounds*
Gear 1c, 8.50–10 wheels	44.0
Gear 1b, 8.50–10 wheels	45.0
Gear 1b, 27-inch streamline wheels	48.0
Gear 1b, 25 by 11–4 extra low-pressure wheels	46.0
Gear 1b, 30 by 5 high-pressure wheels	47.0
Gear 1b, 32 by 6 high-pressure wheels	48.5

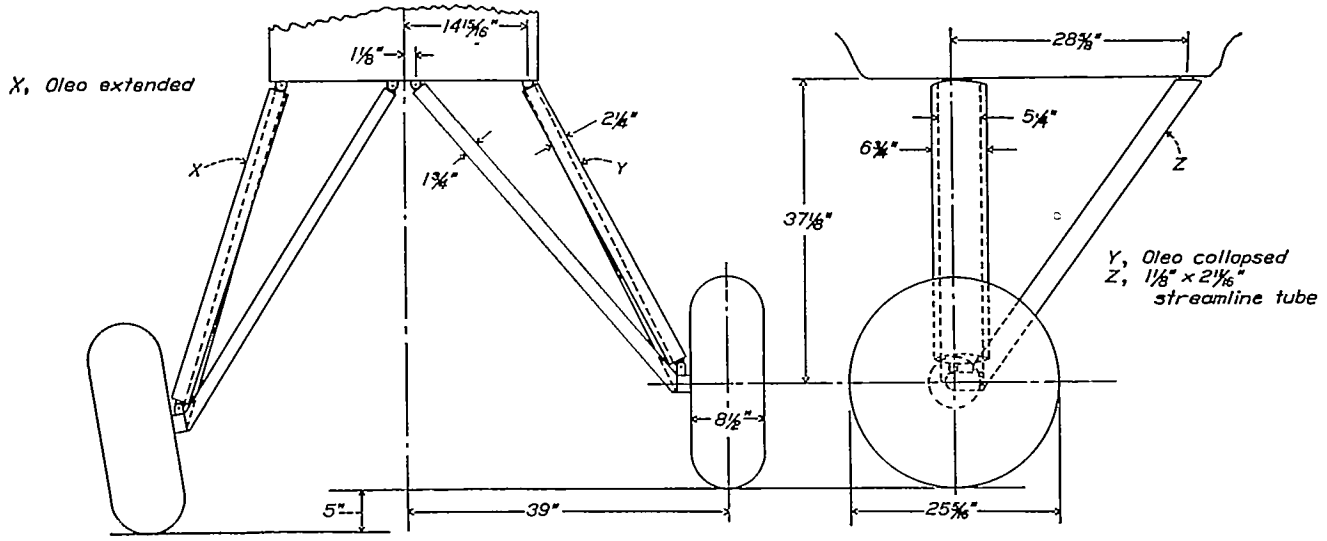

FIGURE 20.—Drag and dimensions of gear 2a. Drag of gear at 100 m.p.h. (oleos extended): 8.50–10 wheels, 46.0 pounds.

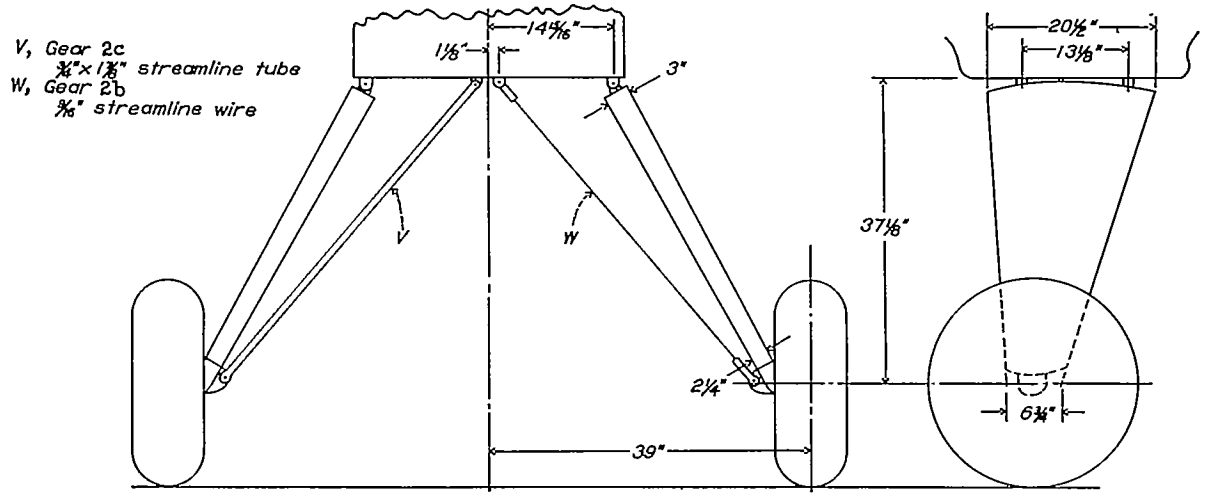

FIGURE 21.—Drag and dimensions of gears 2b and 2c.

Drag of gears at 100 m.p.h.:	*Pounds*
Gear 2b, 8.50–10 wheels	47.0
Gear 2c, 8.50–10 wheels	45.5

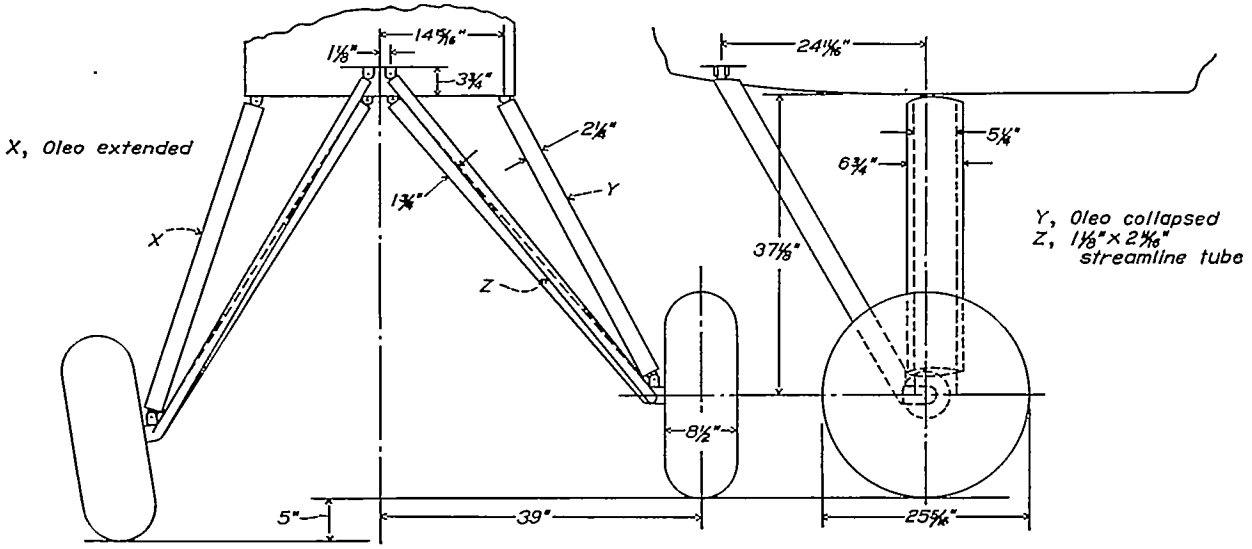

FIGURE 22.—Drag and dimensions of gear 2d. Drag of gear at 100 m.p.h. (oleos extended): 8.50–10 wheels, 43.0 pounds.

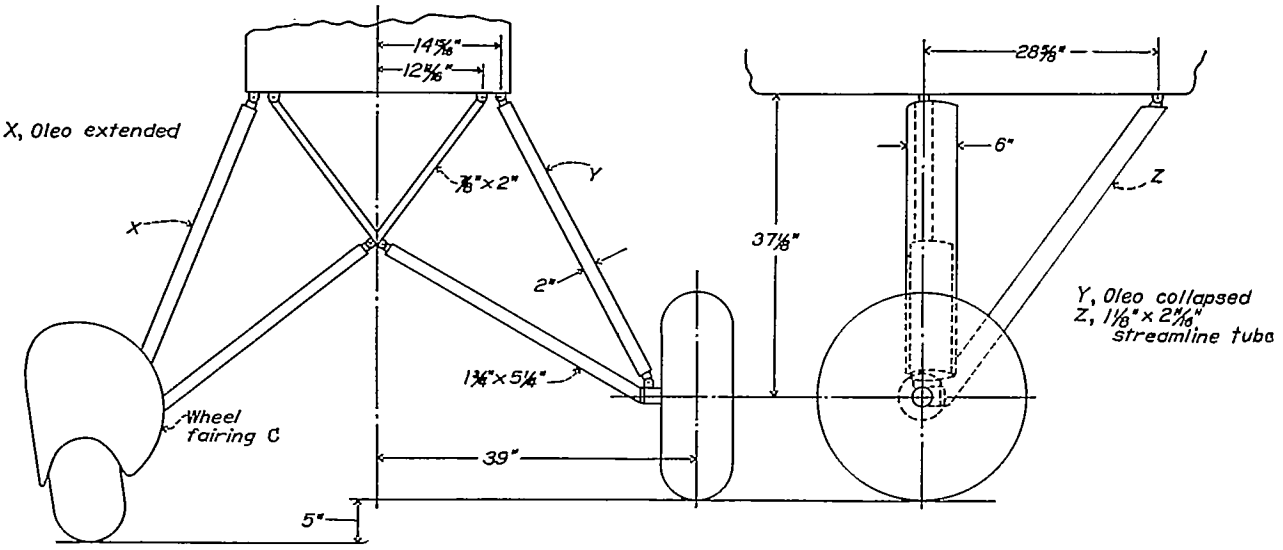

FIGURE 23.—Drag and dimensions of gear 3a.

Drag of gear at 100 m.p.h. (oleos extended):	*Pounds*
8.50–10 wheels	43.5
8.50–10 wheels, wheel fairing C	33.5
27-inch streamline wheels	45.0
25 by 11–4 extra low-pressure wheels	42.0
30 by 5 high-pressure wheels	43.0

S, No. 1 gap filled in, fittings faired
T, No. 2 streamline fairing
U, No. 3 wheel fairing A
V, No. 4 cuffs over cylinder and fittings
W, No. 5 wheel fairing C
X, Oleo extended
Y, " collapsed

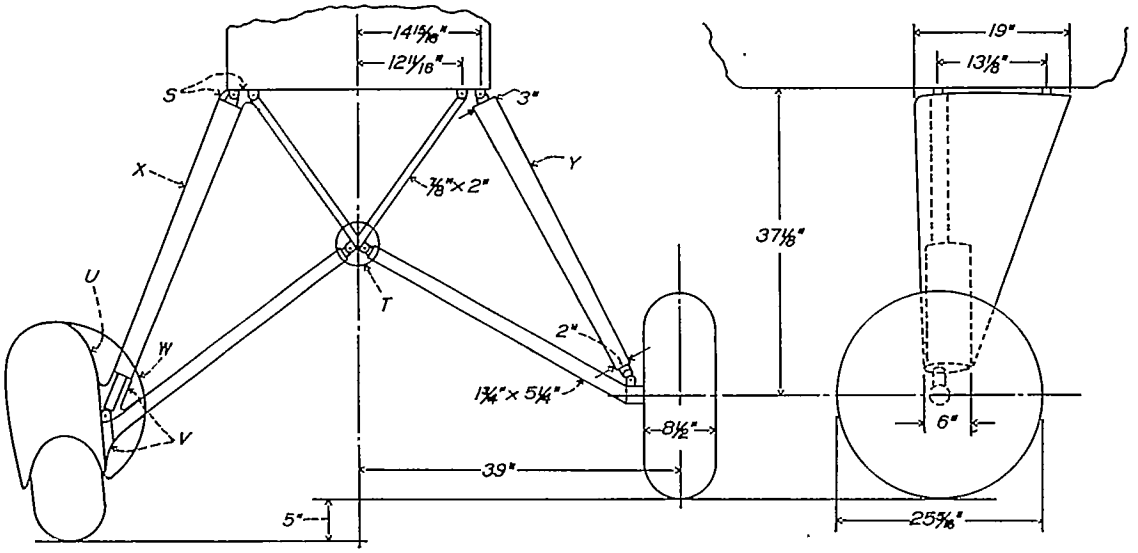

FIGURE 24.—Drag and dimensions of gear 3b.

Drag of gear at 100 m.p.m. (oleos extended):	Pounds
8.50–10 wheels	44.0
8.50–10 wheels, modification 1	43.0
8.50–10 wheels, modifications 1 and 2	41.0
8.50–10 wheels, modification 1, 2, and 3	40.0
8.50–10 wheels, modifications 1, 2, 3, and 4	28.0
8.50–10 wheels, modifications 1, 2, 3, and 5	27.0

X, Oleo extended
Y, " collapsed

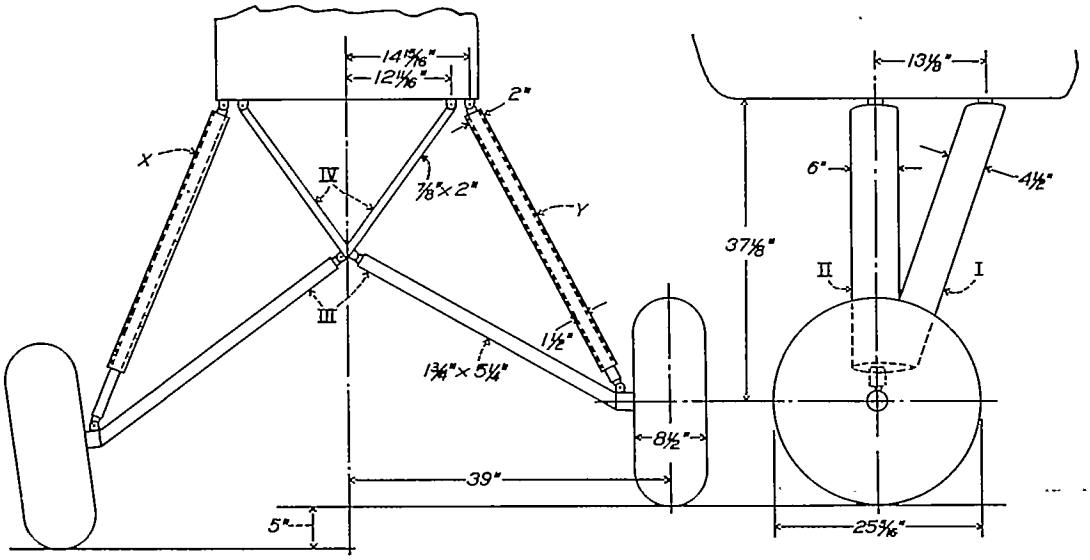

FIGURE 25.—Drag and dimensions of gear 3c.

Drag of gear at 100 m.p.h. (oleos extended):	Pounds
8.50–10 wheels, all struts streamlined	45.0
8.50–10 wheels, streamline fairing removed from members I	51.5
8.50–10 wheels, steamline fairing removed from members I and II	60.0
8.50–10 wheels, streamline fairing removed from members I, II, and III	90.0
8.50–10 wheels, streamline fairing removed from members I, II, III, and IV	98.0

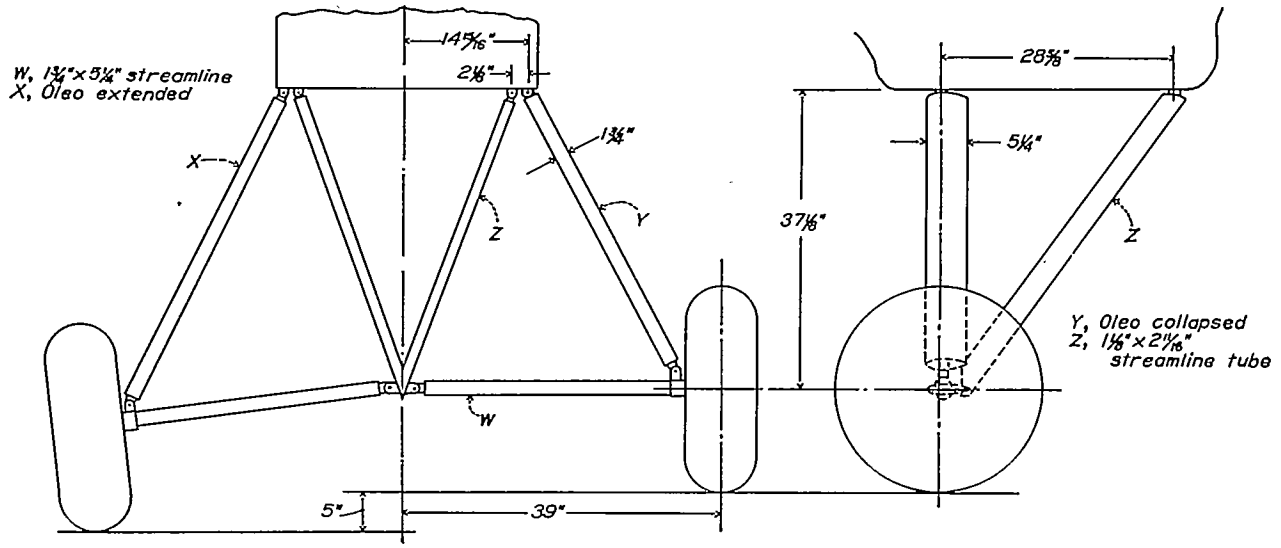

FIGURE 26.—Drag and dimensions of gear 4. Drag of gear at 100 m.p.h. (oleos extended) : 8.50–10 wheels, 39.0 pounds.

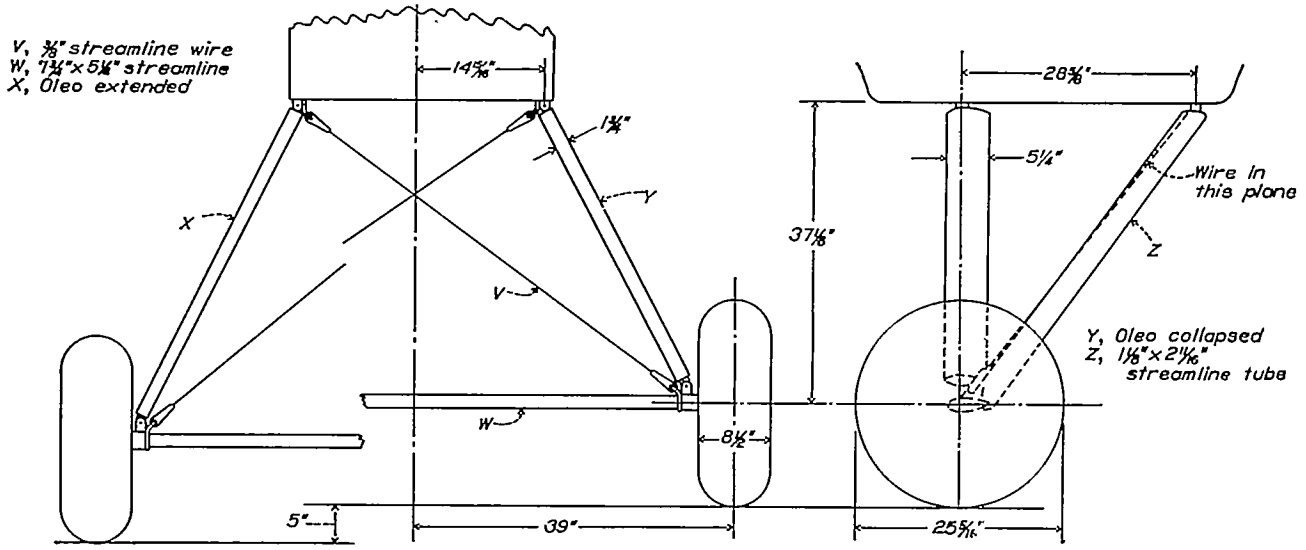

FIGURE 27.—Drag and dimensions of gear 5. Drag of gear at 100 m.p.h. (oleos extended) : 8.50–10 wheels, 38.0 pounds.

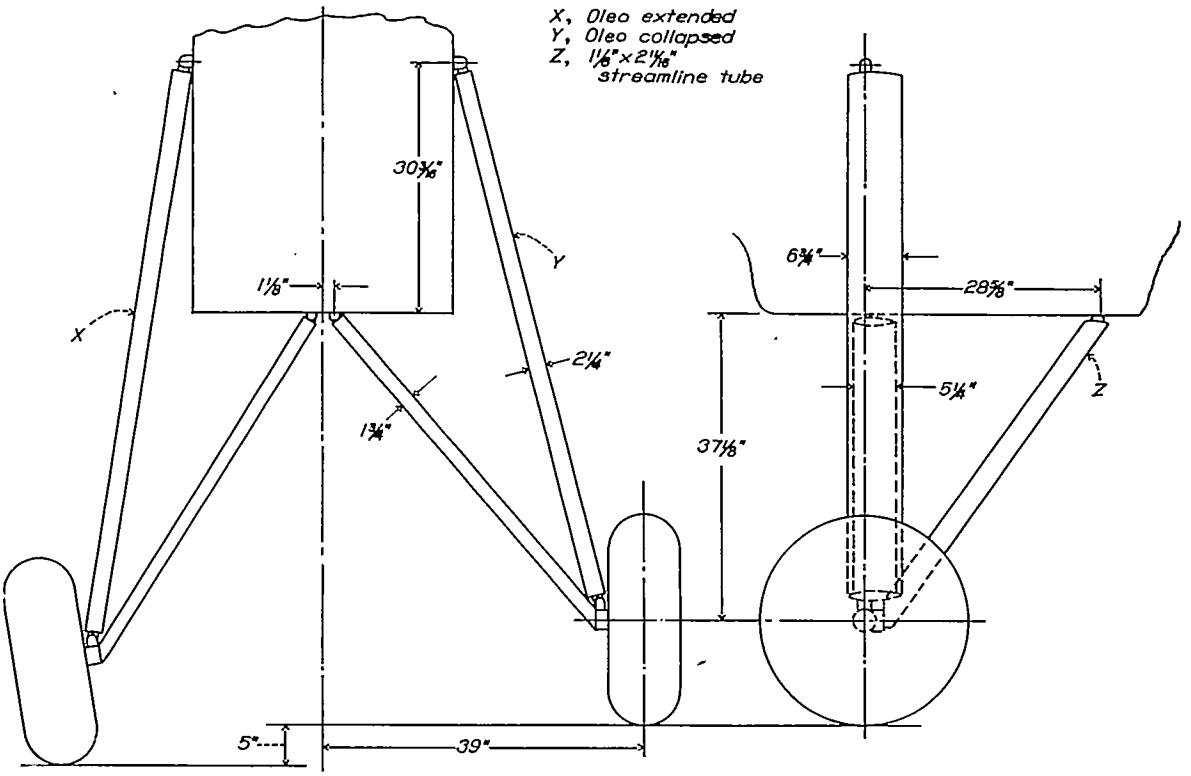

FIGURE 28.—Drag and dimensions of gear 6. Drag of gear at 100 m.p.h. (oleos extended): 8.50–10 wheels, 50.5 pounds.

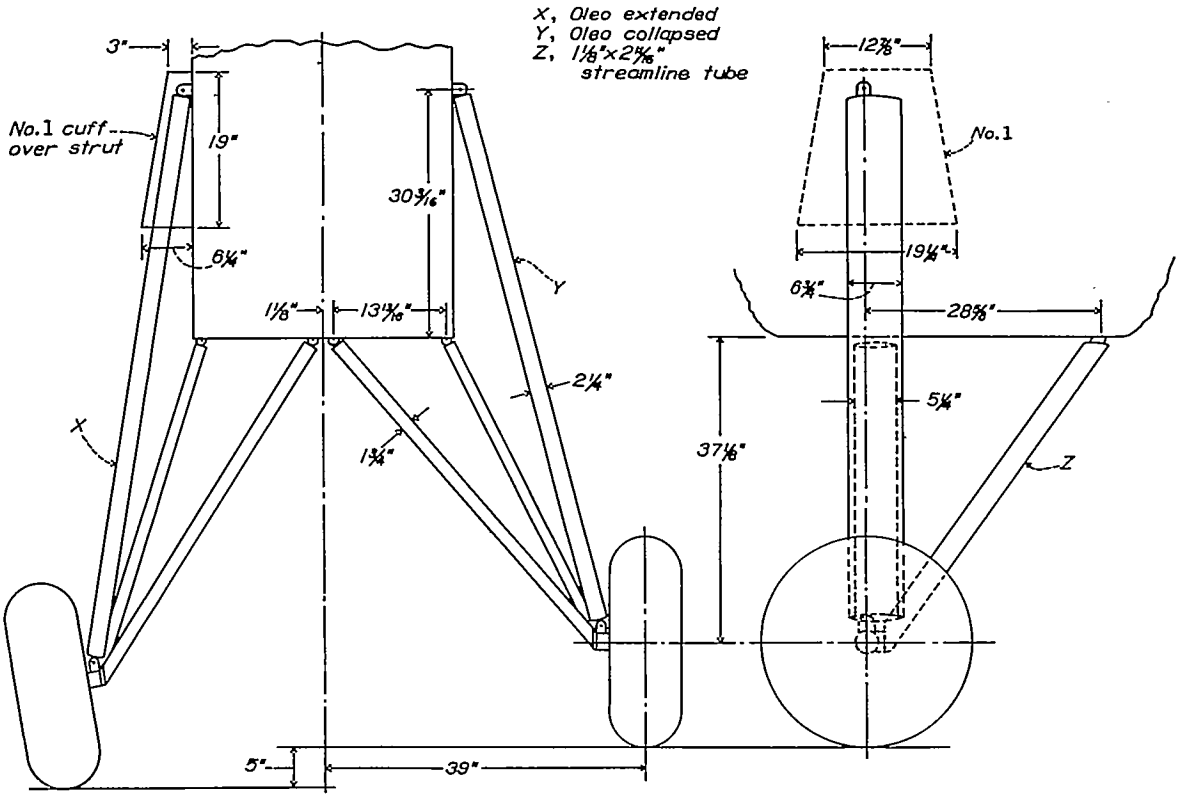

FIGURE 29.—Drag and dimensions of gear 7.

Drag at 100 m.p.h. (oleos extended):	*Pounds*
8.50–10 wheels	51.5
8.50–10 wheels, modification 1	56.0

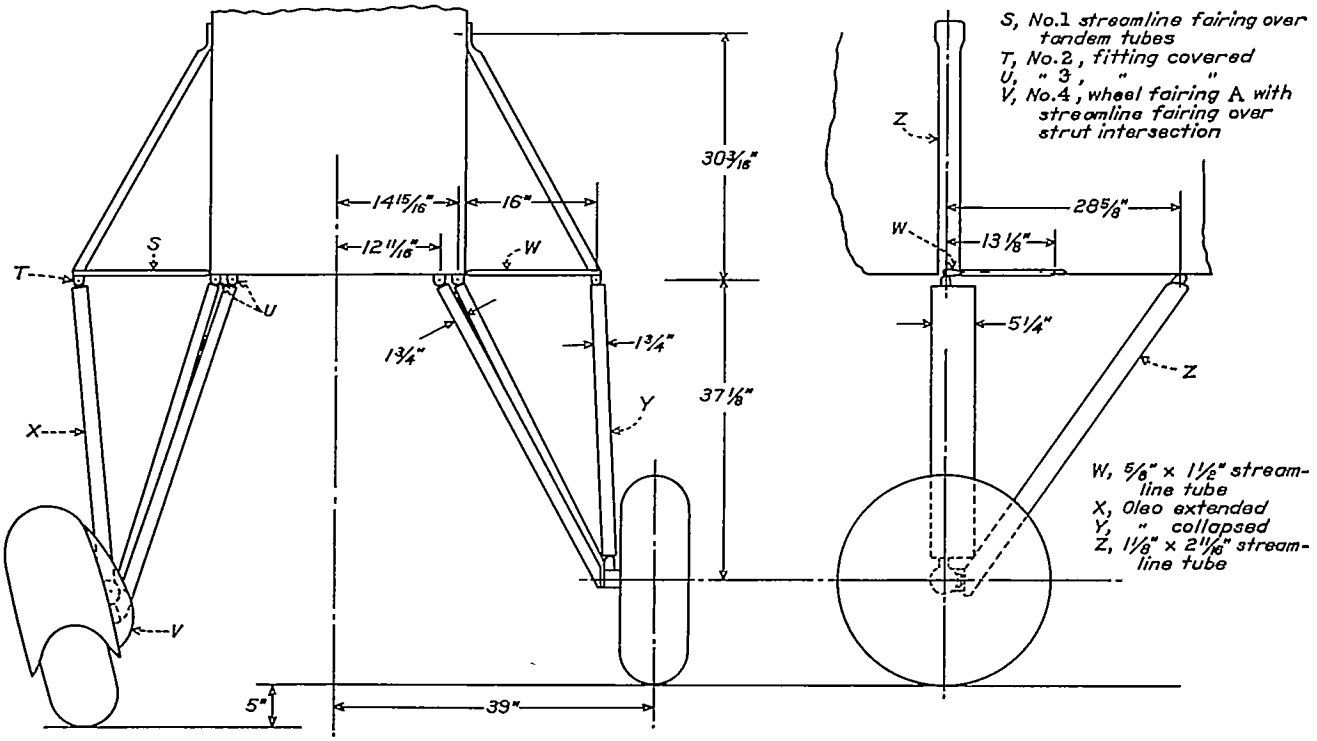

FIGURE 30.—Drag and dimensions of gear 8.

Drag of gear at 100 m.p.h. (oleos extended):	Pounds
8.50–10 wheels, alone	44.0
8.50–10 wheels, with modification 1	44.5
8.50–10 wheels, with modifications 1 and 2	43.0
8.50–10 wheels, with modifications 1, 2, and 3	41.0
8.50–10 wheels, with modifications 1, 2, 3, and 4	30.0
27-inch streamline wheels, with modifications 1, 2, and 3	44.5
25 by 11–4 low-pressure wheels, modifications 1, 2, and 3	43.0
30 by 5 high-pressure wheels, modifications 1, 2, and 3	41.5
32 by 6 high-pressure wheels, modifications 1, 2, and 3	42.5

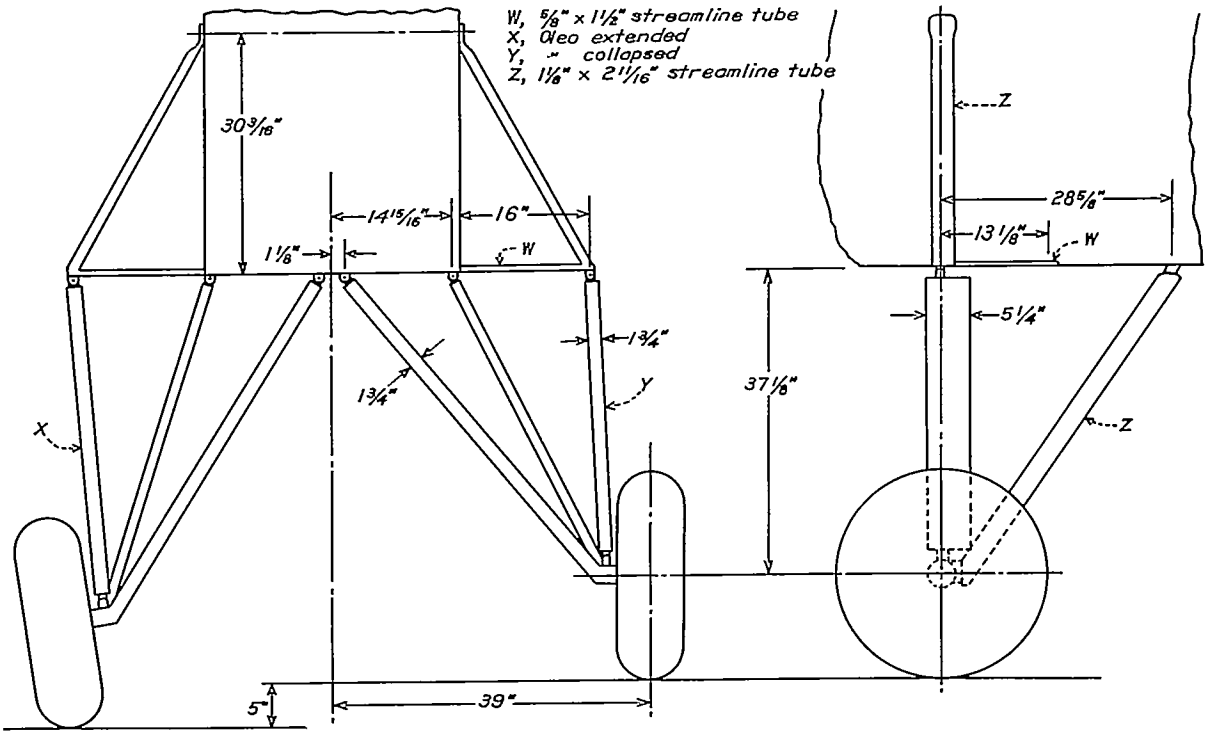

FIGURE 31.—Drag and dimensions of gear 9. Drag of gear at 100 m.p.h. (oleos extended): 8.50–10 wheels, 45.0 pounds.

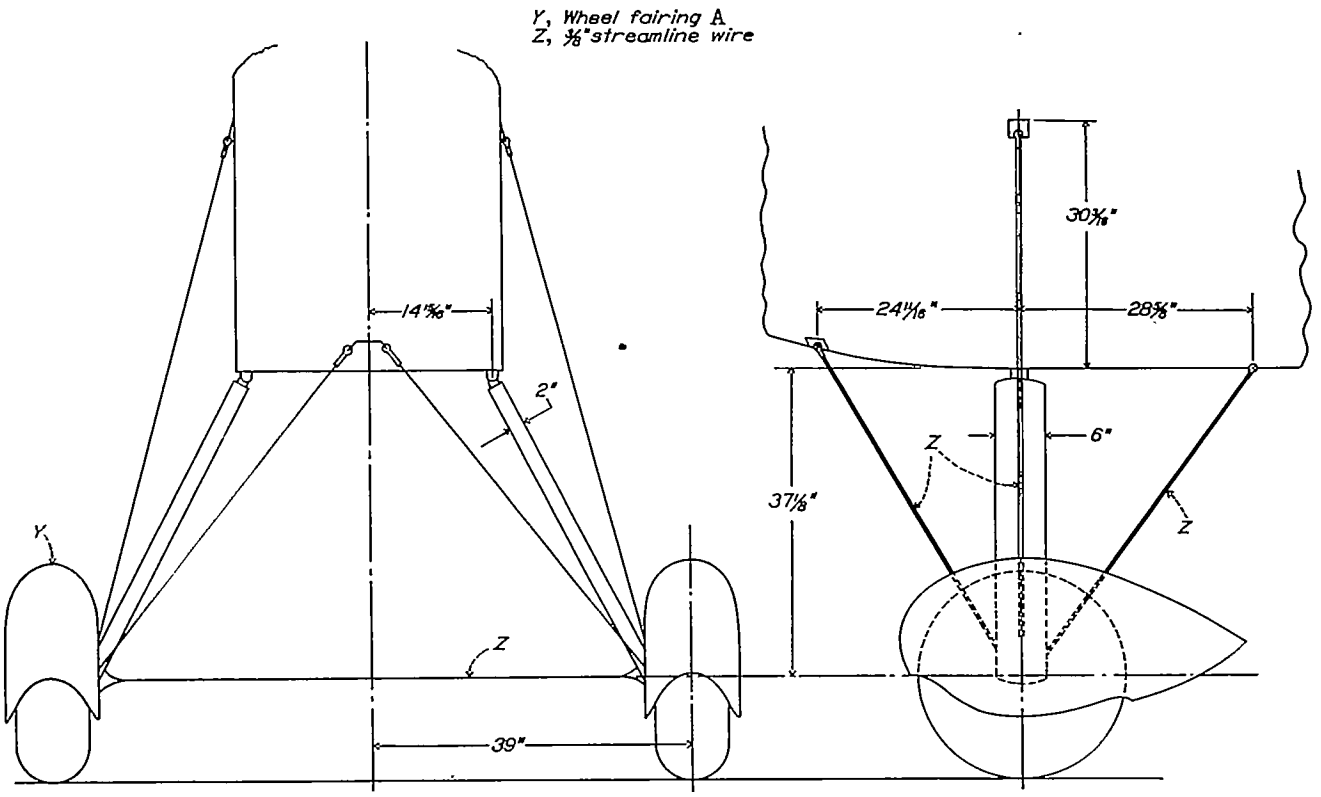

FIGURE 32.—Drag and dimensions of gear 10.

Drag of gear at 100 m.p.h.:	Pounds
Wheel fairings A	27.0
Wheel fairings A, strut and wire fittings faired at fuselage	24.5

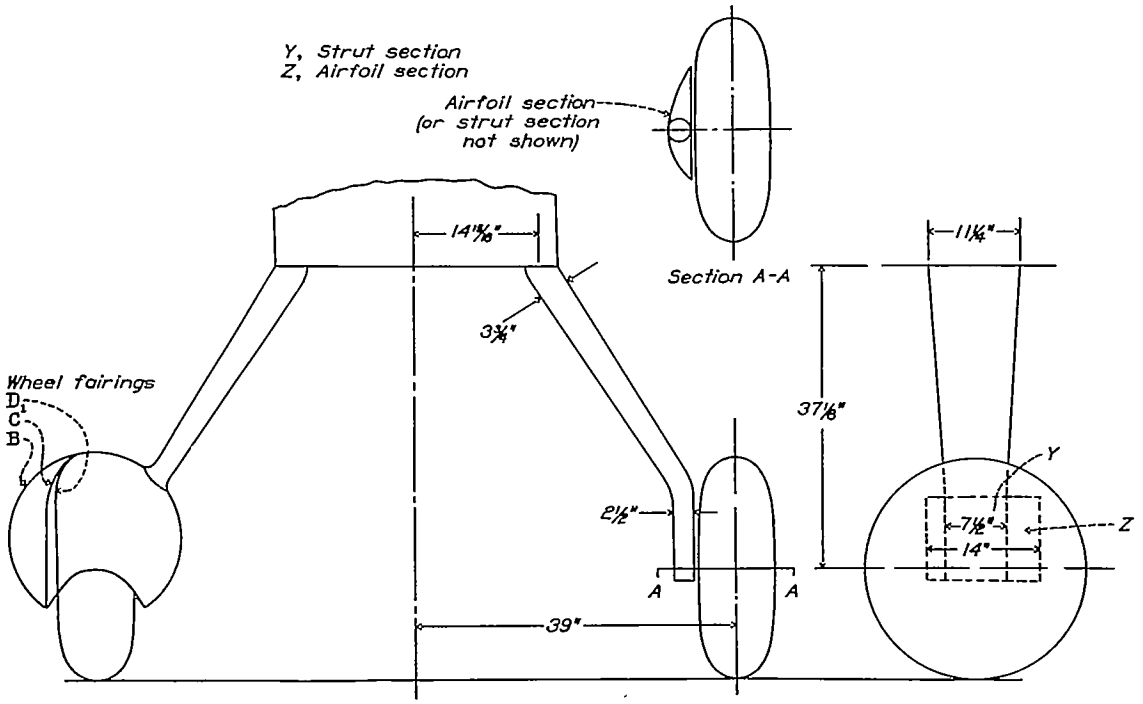

FIGURE 33.—Drag and dimensions of gear 11a

Drag of gear at 100 m.p.h.:	Pounds
8.50–10 wheels, wheel fairings B	20.5
8.50–10 wheels, wheel fairings C	18.5
8.50–10 wheels, wheel fairings D_1	19.5
27-inch streamline wheels, strut section alongside wheel	25.0
27-inch streamline wheels, airfoil section alongside wheel	22.0

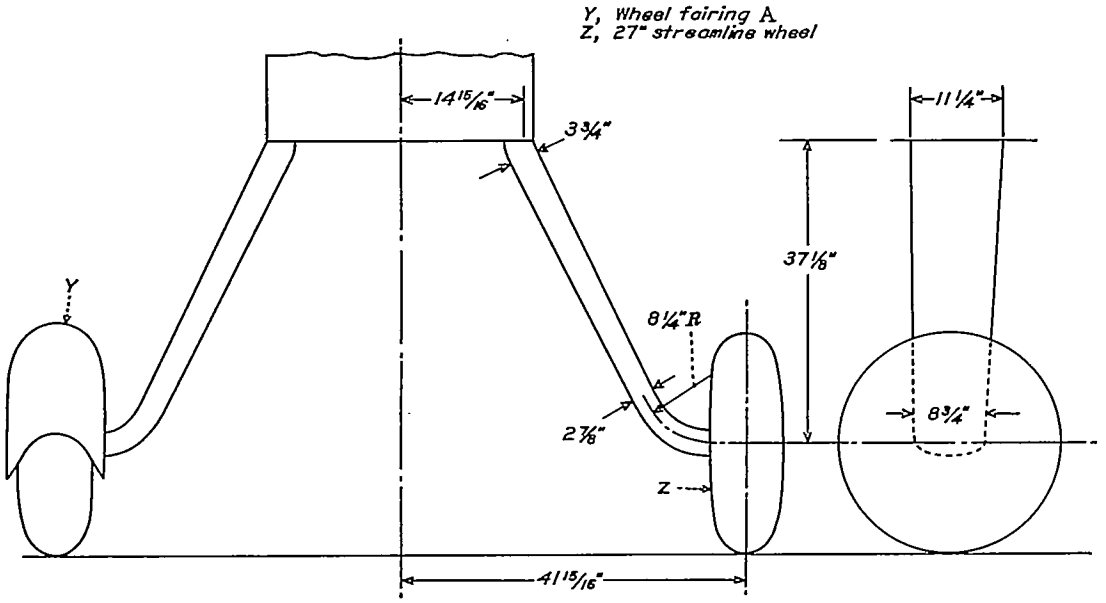

FIGURE 34.—Drag and dimensions of gear 11b.

Drag of gear at 100 m.p.h.:	Pounds
27-inch streamline wheels	21.5
8.50–10 wheels	23.5
8.50–10 wheels, wheel fairing A	17.5

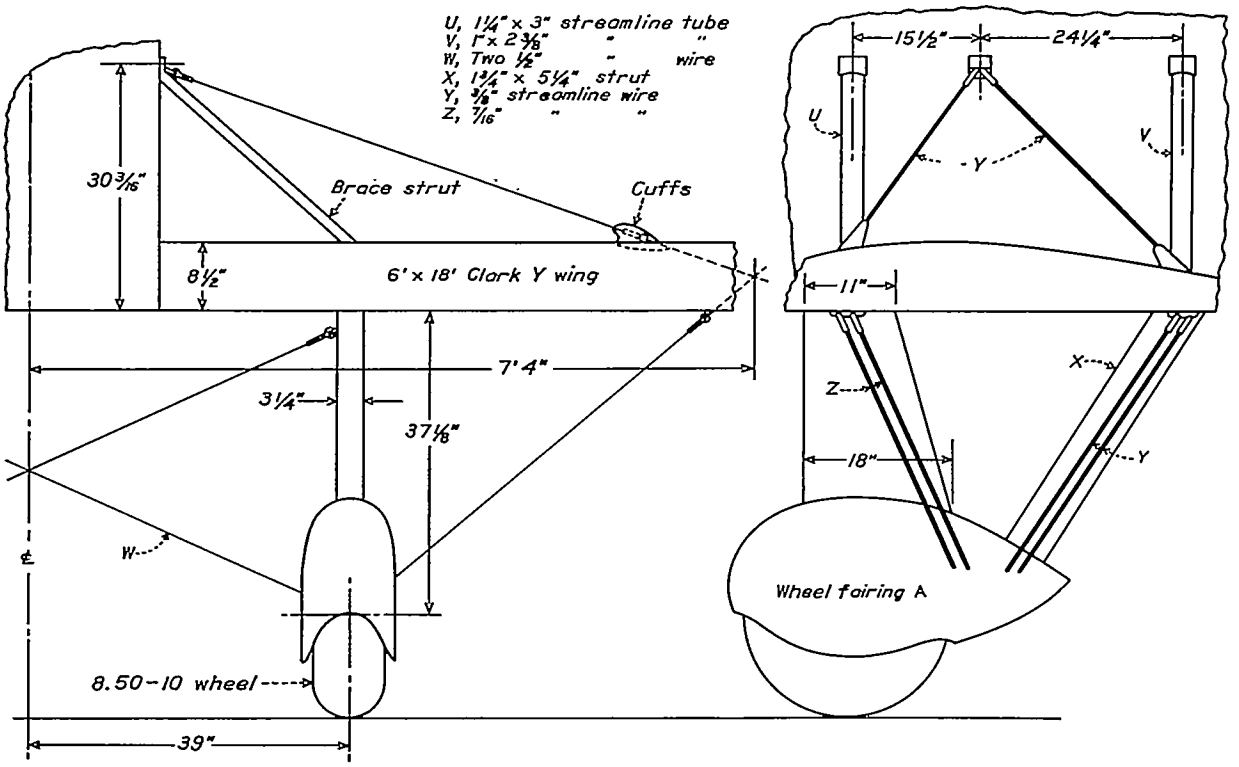

FIGURE 35.—Drag and dimensions of gear 12.

Drag of gear at 100 m.p.h.:	Pounds
8.50–10 wheels, wheel fairings A, wire fittings exposed, brace struts off	38.0
8.50–10 wheels, wheel fairings A, cuffs over fittings, brace struts off	32.0
8.50–10 wheels, wheel fairings A, cuffs over fittings, brace struts on	39.0
8.50–10 wheels, wheel fairings A, wires and brace struts off	18.0

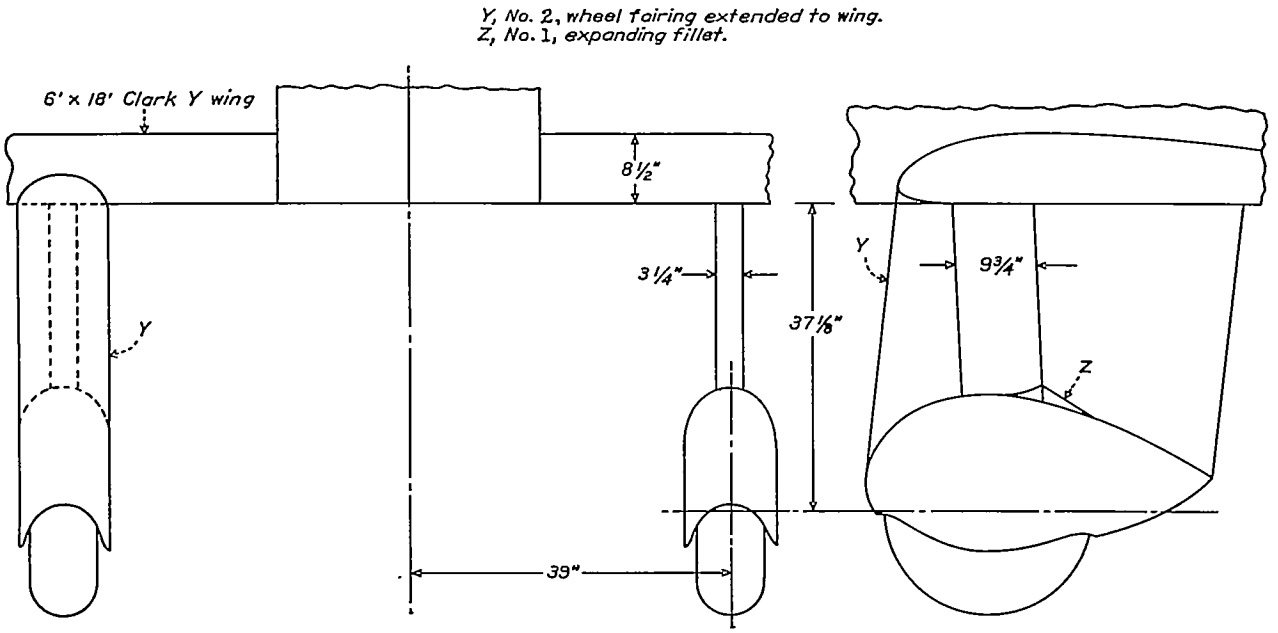

FIGURE 36.—Drag and dimensions of gear 13.

Drag at 100 m.p.h.:	*Pounds*
8.50–10 wheels, wheel fairings A	20.0
8.50–10 wheels, wheel fairings A, modification 1	13.0
8.50–10 wheels, wheel fairings A, modification 2	13.0

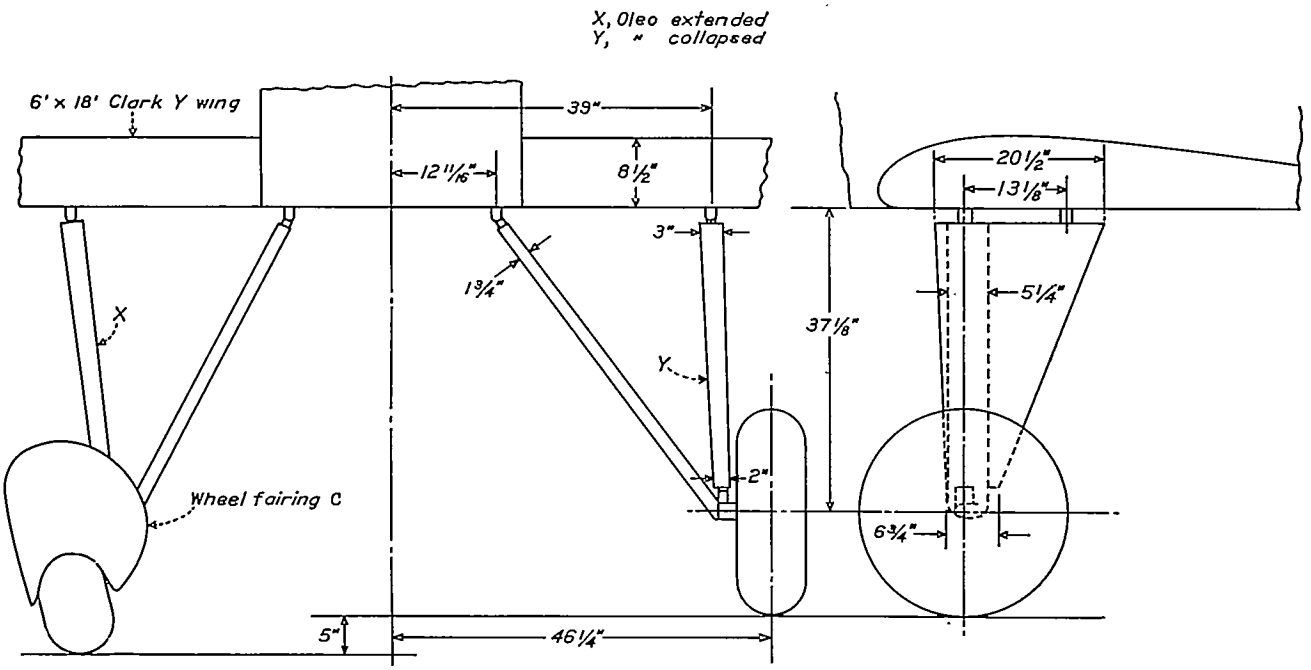

FIGURE 37.—Drag and dimensions of gear 14a.

Drag of gear at 100 m.p.h. (oleos extended):	*Pounds*
8.50–10 wheels	39.0
8.50–10 wheels, wheel fairing C	26.0

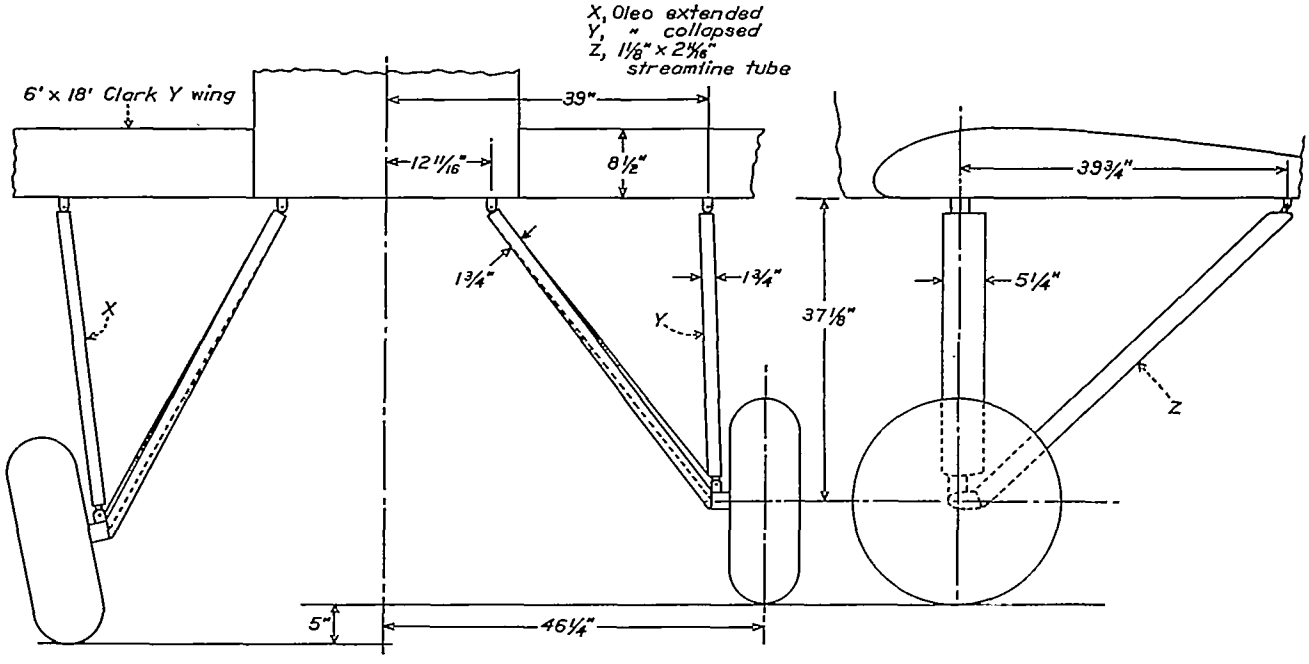

FIGURE 38.—Drag and dimensions of gear 14b. Drag of gear at 100 m.p.h. (oleos extended) : 8.50–10 wheels, 41.0 pounds.

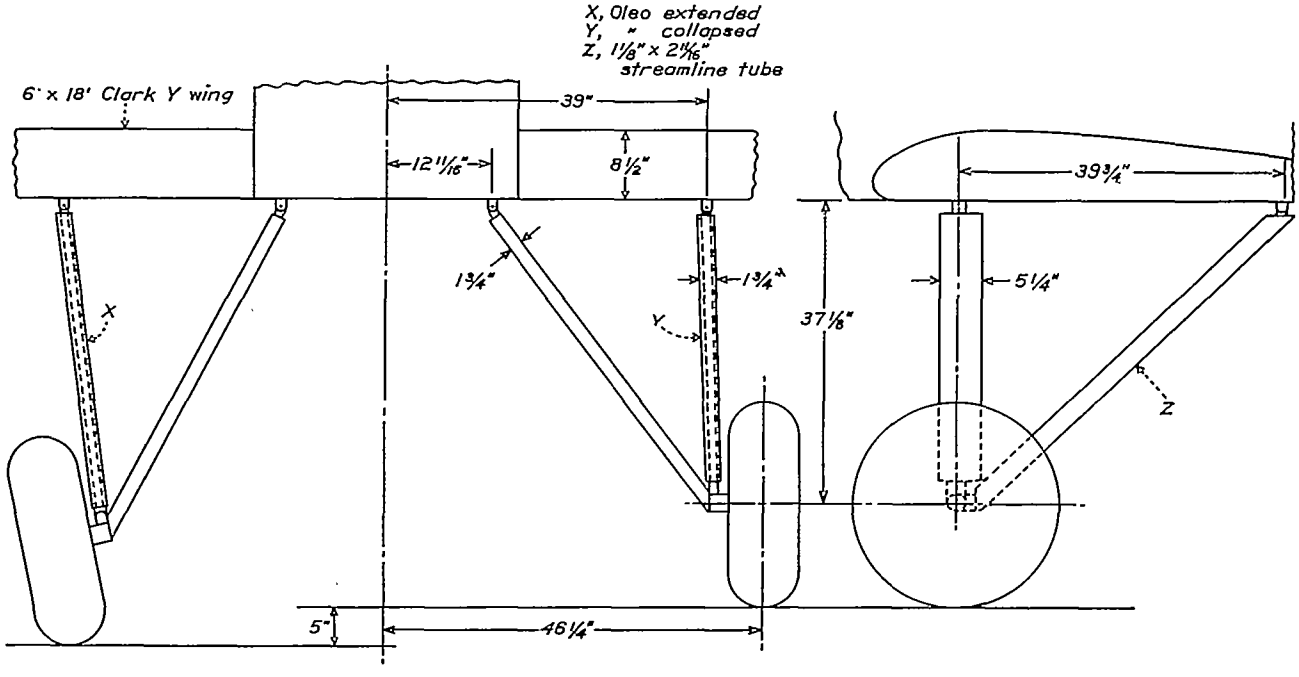

FIGURE 39.—Drag and dimensions of gear 14c. Drag of gear at 100 m.p.h. (oleos extended) . 8.50–10 wheels, 41.0 pounds.

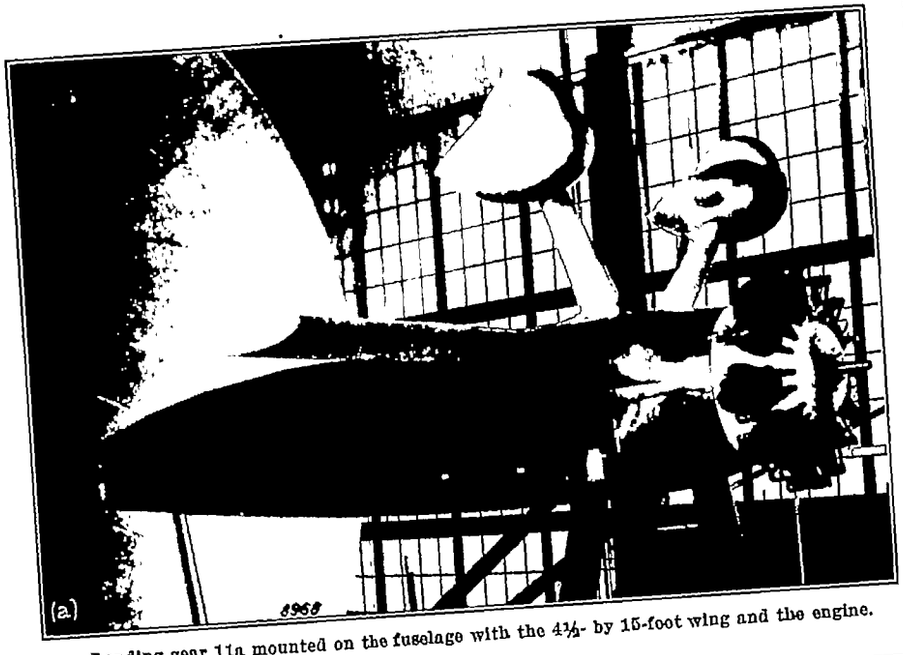

a. Landing gear 11a mounted on the fuselage with the 4½- by 15-foot wing and the engine.

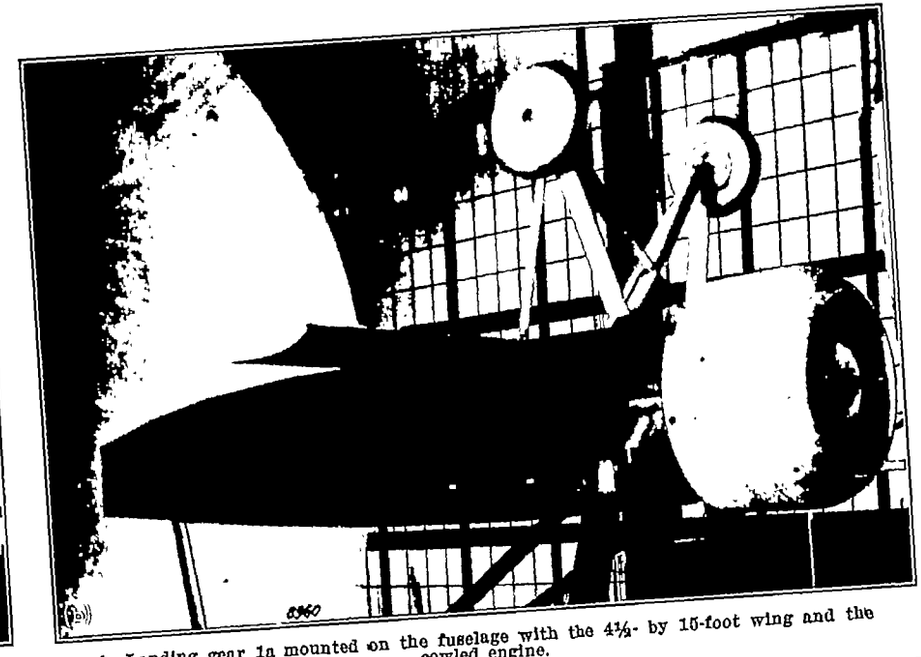

b. Landing gear 1a mounted on the fuselage with the 4½- by 15-foot wing and the cowled engine.

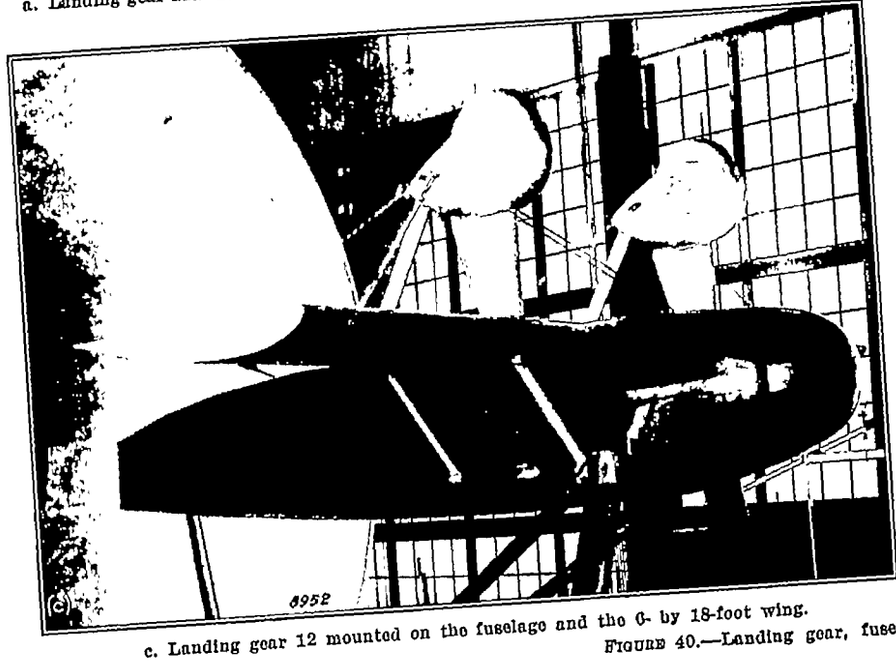

c. Landing gear 12 mounted on the fuselage and the 6- by 18-foot wing.

d. Landing gear 14c mounted on the fuselage and the 6- by 18-foot wing with the engine.

FIGURE 40.—Landing gear, fuselage, wing, and engine combinations.

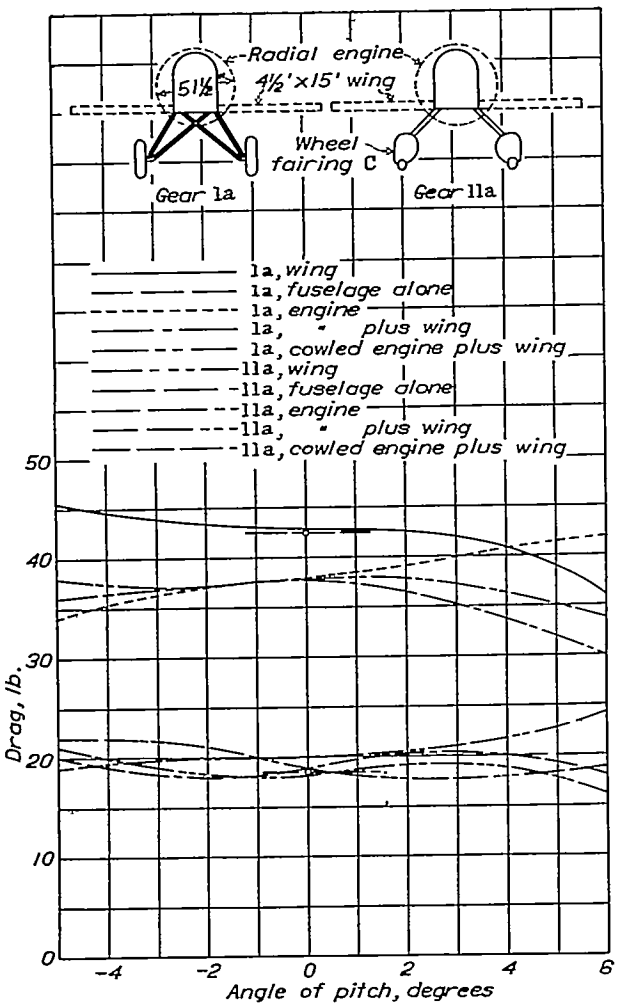

FIGURE 41.—Drag at 100 m.p.h. of landing gears 1a and 11a measured in the presence of the 4½- by 15-foot wing and the engine.

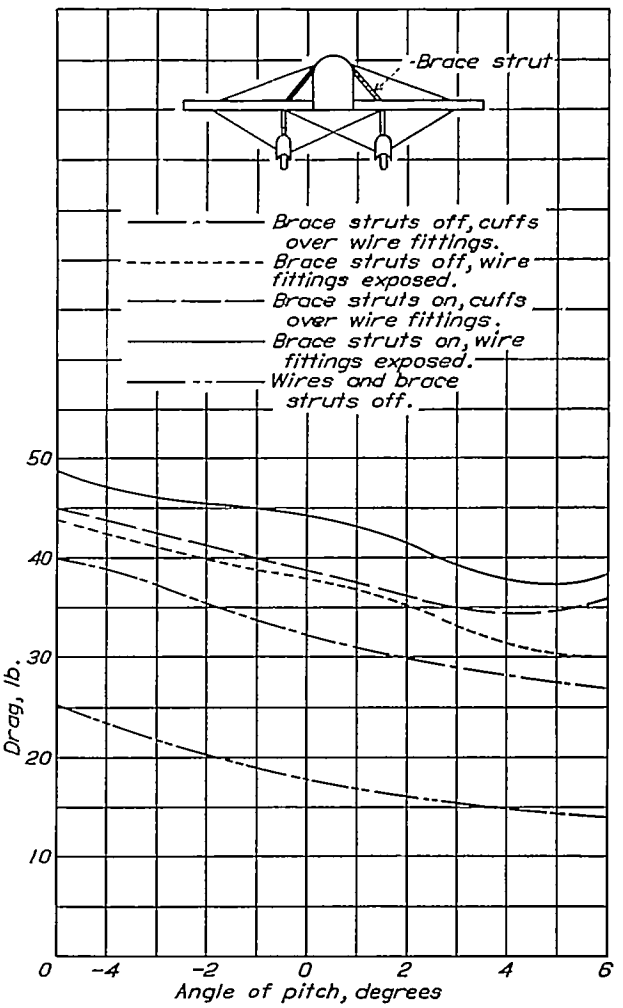

FIGURE 42.—Drag at 100 m.p.h. of gear 12 mounted on the fuselage and the 6- by 18-foot wing.

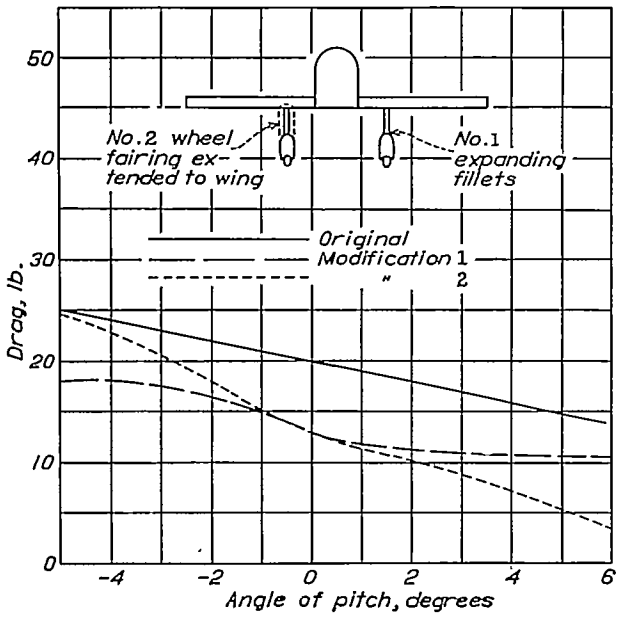

FIGURE 43.—Drag at 100 m.p.h. of gear 13 mounted on the fuselage and the 6- by 18-foot wing.

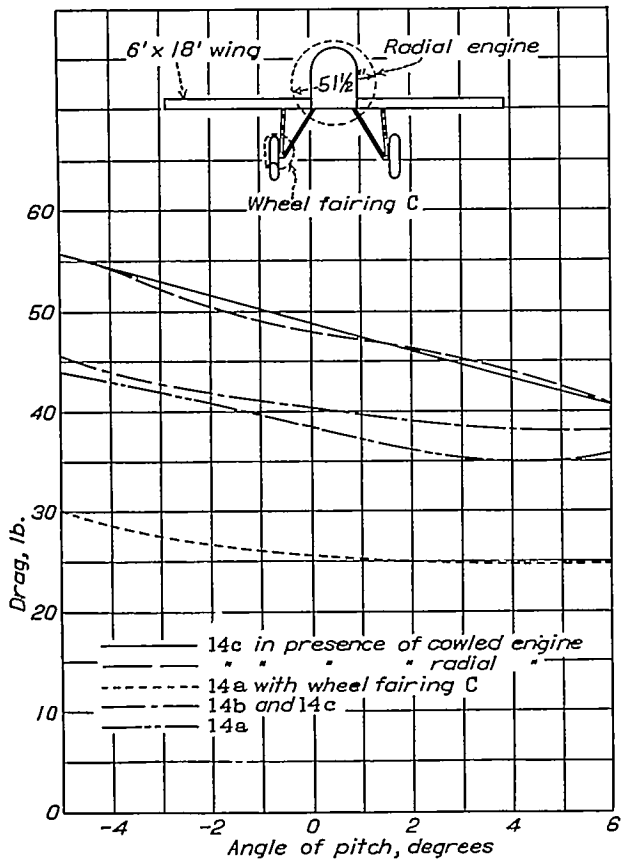

FIGURE 44.—Drags at 100 m.p.h. of gears 14a, 14b, and 14c mounted on fuselage and the 6- by 18 foot wing.

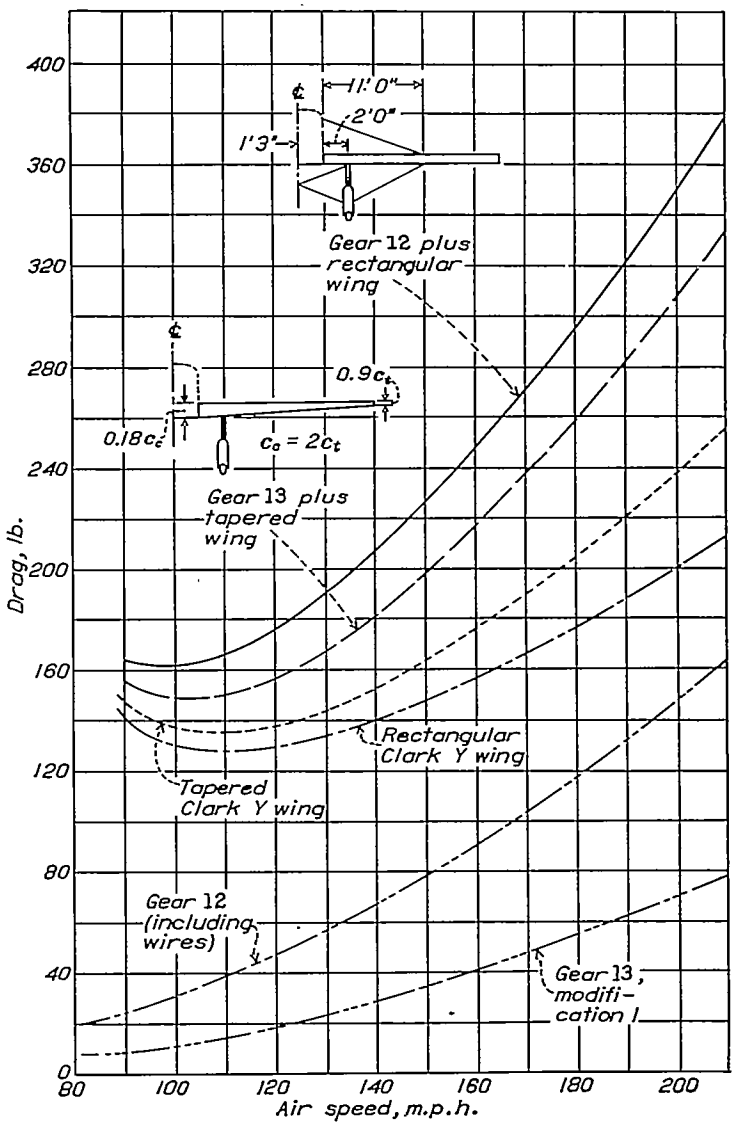

FIGURE 45.—Drag comparison of a wire-braced wing and gear with a cantilever wing and gear. Assumed wing area, 250 square feet; wing loading, 12 pounds per square foot; aspect ratio 6. Wing data taken from reference 8.

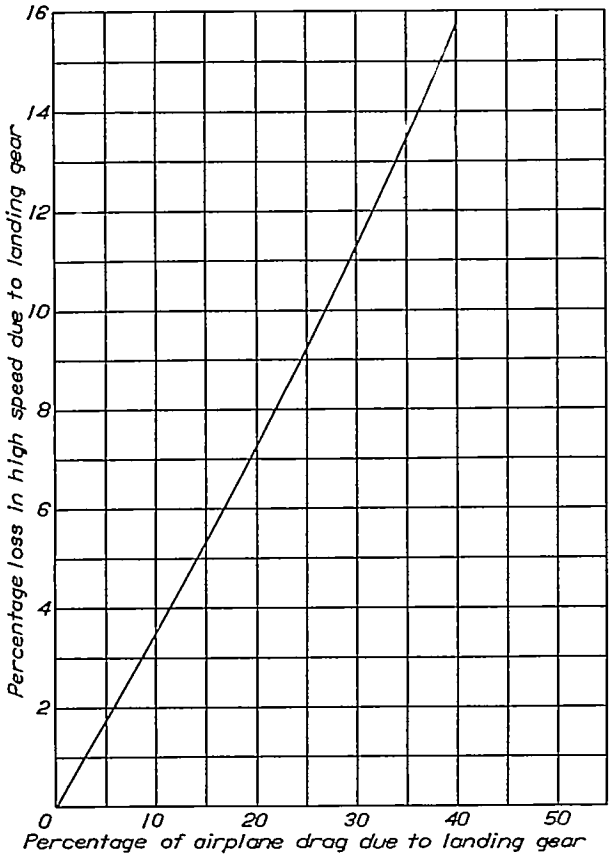

FIGURE 46.—A general relationship applicable to landing gears, showing the effect of parasite drag on the high speed of airplanes. (Thrust horsepower and drag coefficient of airplane assumed constant for small changes in angle of attack at high-speed condition.)

TABLE I.—DRAG OF VARIOUS WHEELS AND TIRES

Wheel and tire	Drag at 80 m.p.h.	Decrease in drag
	Pounds	*Percent*
8.50–10 low-pressure wheel and tire	6.1	----------
27-inch streamline wheel and tire	5.0	18.0
25 by 11–4 extra-low-pressure wheel and tire	7.1	−16.4
30 by 5 disk wheel and high-pressure tire	5.9	3.3
30 by 5 disk wheel and 32 by 6 high-pressure tire	6.9	−13.1

TABLE II.—DRAG OF 8.50–10 WHEEL WITH VARIOUS WHEEL FAIRINGS

Wheel fairing	Drag at 80 m.p.h.	Decrease in drag at 80 m.p.h.	Drag at 100 m.p.h.
	Pounds	*Percent*	*Pounds*
Wheel unfaired	6.1	----------	9.7
A	3.5	42.7	6.1
A (modification A_1)	2.9	52.4	4.3
A (modification A_2)	1.7	72.2	2.4
B	5.3	13.1	7.9
C	4.6	24.6	7.1
D	7.7	−26.3	11.8
D (modification D_1)	5.5	9.9	8.7
E	6.4	−4.9	----------

TABLE III.—DRAG OF HALF OF LANDING GEAR 2a WITH 8.50–10 WHEEL AND WHEEL FAIRINGS

Wheel fairing	Drag at 80 m.p.h	Decrease in drag at 80 m.p.h.	Drag at 100 m.p.h.
	Pounds	*Pounds*	*Pounds*
Wheel unfaired	11.5	----------	18.0
A	10.2	1.3	15.9
A (modification 1)	9.0	2.5	----------
A (modification 2)	9.1	2.4	----------
A (modification 3)	10.6	.9	----------
B	9.7	1.8	14.5
B (1-inch radius fillets)	9.0	2.5	----------
C	9.0	2.5	14.1
C (1-inch radius fillets)	8.3	3.2	----------
D	11.7	−.2	18.3
E (¼-inch radius fillets)	11.2	.3	----------
E (1-inch radius fillets)	11.0	.5	----------
E (1-inch radius fillets-modification E_1)	9.8	1.7	----------
E (1-inch radius fillets-modifications E_1 and E_2)	9.2	2.3	----------
E (1-inch radius fillets-modifications E_2 and E_3)	9.4	2.1	14.9
F (½-inch gap)	14.2	−2.7	22.6
F (gap closed)	13.8	−2.3	----------

TABLE IV.—DRAG DUE TO VARIOUS LANDING GEARS MOUNTED ON TEST FUSELAGE, 0° PITCH, 8.50–10 WHEELS

Landing gear	Drag at 100 m.p.h.	Landing gear no.	Drag at 100 m.p.h.
	Pounds		*Pounds*
1a	42.5	4	39.0
1b	45.0	5	38.0
1c	44.0	6	50.5
2a	46.0	7	51.5
2b	47.0	8	44.0
2c	45.5	9	45.0
2d	43.0	11b	23.5
3a	43.5	14a [1]	39.0
3b	44.0	14b [1]	41.0
3c	45.0	14c [1]	41.0

[1] Gears mounted on fuselage and 6- by 18-foot wing.

TABLE V.—EFFECT OF VARIOUS WHEELS UPON THE DRAG DUE TO SEVERAL LANDING GEARS MOUNTED ON TEST FUSELAGE, 0° PITCH

Wheel	Drag at 100 m.p.h.	Decrease in drag
LANDING GEAR 1b		
	Pounds	*Percent*
8.50–10 low pressure	45.0	----------
27-inch streamline	48.0	−0.7
25 by 11–4 extra-low pressure	46.0	−2.2
30 by 5 high pressure	47.0	−4.4
32 by 6 high pressure	48.5	−7.8
LANDING GEAR 3a		
8.50–10 low pressure	43.5	----------
27-inch streamline	45.0	−3.5
25 by 11–4 extra-low pressure	42.0	3.5
30 by 5 high pressure	43.0	1.5
LANDING GEAR 8		
8.50–10 low pressure	44.0	----------
27-inch streamline	47.5	−8.0
25 by 11–4 extra-low pressure	46.0	−4.5
30 by 5 high pressure	44.5	−1.1
32 by 6 high pressure	45.5	−3.4
LANDING GEAR 11b		
8.50–10 low pressure	23.5	----------
27-inch streamline	21.5	8.5

TABLE VI.—EFFECT OF VARIOUS MODIFICATIONS UPON THE DRAG DUE TO LANDING GEARS MOUNTED ON TEST FUSELAGE, 0° PITCH

Condition of gear	Drag at 100 m.p.h.	Decrease in drag
LANDING GEAR 3a		
	Pounds	*Percent*
8.50-10 wheels	43.5	
8.50-10 wheels, wheel fairing C	33.5	23
LANDING GEAR 3b		
8.50-10 wheels	44.0	
8.50-10 wheels, modification 1	43.0	2.3
8.50-10 wheels, modifications 1 and 2	41.0	6.8
8.50-10 wheels, modifications 1, 2, and 3	40.0	9.1
8.50-10 wheels, modifications 1, 2, 3, and 4	28.0	36.4
8.50-10 wheels, modifications 1, 2, and 5	27.0	38.6
LANDING GEAR 3c		
8.50-10 wheels	45.0	
8.50-10 wheels, fairing removed from I	51.5	−14.4
8.50-10 wheels, fairing removed from I and II	69.0	−31.1
8.50-10 wheels, fairing removed from I, II, and III	90.0	−100.0
8.50-10 wheels, fairing removed from I, II, III, and IV	98.0	−117.7
LANDING GEAR 7		
8.50-10 wheels	51.5	
8.50-10 wheels, modification 1	56.0	−8.0
LANDING GEAR 8		
8.50-10 wheels	44.0	
8.50-10 wheels, modification 1	44.5	−1.1
8.50-10 wheels, modifications 1 and 2	43.0	2.3
8.50-10 wheels, modifications 1, 2, and 3	41.0	6.8
8.50-10 wheels, modifications 1, 2, 3, and 4	30.0	31.8
LANDING GEAR 10		
8.50-10 wheels, wheel fairing A	27.0	
8.50-10 wheels, wheel fairing A, strut and wire fittings faired at fuselage	24.5	9.3
LANDING GEAR 11a		
8.50-10 wheels, wheel fairing B	20.5	
8.50-10 wheels, wheel fairing C	18.5	9.8
8.50-10 wheels, wheel fairing D, modification D_1	19.5	4.9
27-inch streamline wheels, strut section alongside wheel	25.0	−22.0
27-inch streamline wheels, airfoil section alongside wheel	22.0	−7.3
LANDING GEAR 11b		
8.50-10 wheels	23.5	
8.50-10 wheels, wheel fairing A	17.5	25.5
FUSELAGE WITH 6- BY 18-FOOT WING LANDING GEAR 12		
8.50-10 wheels, wheel fairing A, wire fittings exposed, brace struts off	38.0	
8.50-10 wheels, wheel fairing A, cuffs over fittings, brace struts off	32.0	
8.50-10 wheels, wheel fairing A, cuffs over fittings, brace struts on	39.0	
8.50-10 wheels, wheel fairing A, wires and brace struts off	18.0	
FUSELAGE WITH 6- BY 18-FOOT WING LANDING GEAR 13		
8.50-10 wheels, wheel fairing A	20.0	
8.50-10 wheels, wheel fairing A, modification 1	13.0	35.0
8.50-10 wheels, wheel fairing A, modification 2	13.0	35.0

TABLE VI.—EFFECT OF VARIOUS MODIFICATIONS UPON THE DRAG DUE TO LANDING GEARS MOUNTED ON TEST FUSELAGE, 0° PITCH—Continued.

Condition of gear	Drag at 100 m.p.h.	Decrease in drag
FUSELAGE WITH 6- BY 18-FOOT WING LANDING GEAR 14a		
	Pounds	*Percent*
8.50-10 wheels	39.0	
8.50-10 wheels, wheel fairing C	26.0	33.3

TABLE VII-A.—ANALYSIS OF LANDING-GEAR DRAG

LANDING GEARS DESIGNED FOR ATTACHMENT TO FUSELAGE, AIR SPEED=100 M.P.H., 0° PITCH

Landing gear	Computed drag of struts	Measured drag of wheels	Computed drag of complete gear	Measured drag of gear	Interference and fitting drag	Percentage drag of gear due to struts	Percentage drag of gear due to wheels	Percentage drag of gear due to interference and fittings	Measured drag / Computed drag
TRIPOD TYPES									
	Lb.	*Lb.*	*Lb.*	*Lb.*	*Lb.*				
1a	6.2	19.4	25.6	42.5	16.9	14.6	45.7	39.7	1.66
1b	4.3	19.4	23.7	45.0	21.3	9.6	43.2	47.2	1.90
2a	6.0	19.4	25.4	46.0	20.6	13.0	42.0	45.0	1.80
2b	7.9	19.4	27.3	47.0	19.7	16.8	41.2	42.0	1.73
2c	4.3	19.4	23.7	45.5	21.8	9.4	42.6	48.0	1.92
2d	6.3	19.4	25.7	42.7	17.0	14.6	45.4	40.0	1.66
3a	5.7	19.4	25.1	43.5	18.4	12.8	44.7	42.5	1.73
3b	5.4	19.4	24.8	44.0	19.2	12.2	44.0	43.8	1.78
6	7.9	19.4	27.3	50.5	23.2	15.2	38.5	45.8	1.85
7	7.8	19.4	27.1	51.5	24.5	15.0	37.5	47.5	1.90
8	6.4	19.4	25.8	44.0	18.2	14.5	44.2	41.3	1.70
9	6.7	19.4	26.1	45.0	18.9	15.0	43.1	41.9	1.73
Average	6.2	19.4	25.6	45.6	20.0	13.6	42.7	43.7	1.78
TRIPOD TYPES (WITH WHEEL FAIRINGS)									
3a	5.7	14.2	19.9	33.5	13.6	16.9	42.4	40.7	1.69
3b	5.4	14.2	19.6	27.0	7.4	20.0	52.5	27.5	1.38
8	6.4	10.9	17.3	30.0	12.7	21.3	36.4	42.3	1.73
Average	5.8	13.1	18.9	30.2	11.2	19.4	43.8	36.8	1.60
HORIZONTAL-AXLE TYPES									
4	6.1	19.4	25.5	38.7	13.2	15.7	50.0	34.3	1.52
5	7.6	19.4	27.0	38.0	11.0	20.0	51.0	29.0	1.41
Average	6.8	19.4	26.2	38.3	12.1	17.8	50.5	31.6	1.46
SINGLE-STRUT TYPES									
11a [1]	3.5	15.6	19.2	25.0	5.8	14.0	62.7	23.3	1.30
11a [2]	3.5	15.6	19.2	22.0	2.8	16.0	71.1	12.9	1.15
11b	3.8	15.6	19.4	21.5	2.1	17.4	72.8	9.8	1.11
Average	3.6	15.6	19.3	22.8	3.6	15.8	68.9	15.3	1.19
SINGLE-STRUT TYPES (WITH WHEEL FAIRINGS)									
10	7.5	12.1	19.6	27.0	7.4	27.8	44.8	27.4	1.38
11a	2.6	14.2	16.8	18.5	1.7	9.2	77.0	14.0	1.10
11b	3.8	12.1	15.9	17.5	1.6	21.6	69.1	9.3	1.10
Average	4.6	12.8	17.4	21.0	3.6	19.5	63.6	16.9	1.19

[1] Strut section alongside wheel.
[2] Airfoil section alongside wheel.

TABLE VII-B.—ANALYSIS OF LANDING-GEAR DRAG

LANDING GEARS DESIGNED FOR ATTACHMENT TO WING

Air Speed=100 M.P.H. 0° Pitch

Landing gear	Computed drag of struts	Measured drag of wheels	Computed drag of complete gear	Measured drag of gear	Interference and fitting drag	Percentage drag of gear due to struts	Percentage drag of gear due to wheels	Percentage drag of gear due to interference and fittings	Measured drag / Computed drag
TRIPOD TYPES									
	Lb.	*Lb.*	*Lb.*	*Lb.*	*Lb.*				
14a	4.9	19.4	24.3	39.0	14.7	12.6	49.8	37.6	1.60
14b	4.9	19.4	24.3	41.0	16.7	11.8	47.4	40.8	1.65
14c	4.9	19.4	24.3	41.0	16.7	12.1	47.2	40.7	1.68
Average	4.9	19.4	24.3	39.7	16.0	12.2	48.1	39.7	1.64
TRIPOD TYPES (WITH WHEEL FAIRINGS)									
14a	4.9	14.2	19.1	26.0	6.9	18.9	54.7	26.4	1.35
WIRE BRACED (INCLUDING WING BRACING)									
12 (without brace struts)	22.2	12.1	34.3	38.0	3.7	58.5	31.5	9.7	1.10
12 (with brace struts)	24.0	12.1	36.1	45.0	8.9	53.4	26.9	19.7	1.24
CANTILEVER (WITH WHEEL FAIRINGS)									
13 (modification 1)	2.0	10.9	12.9	13.0	0.1	15.2	84.0	0.8	1.01
13 (modification 2)	11.8	[1][2]9.8	21.6	13.0	−6.6	------	------	------	.60

[1] Lower half wheel fairing.
[2] Computed from tests of wheel fairings A and A_2.

TABLE VIII.—EFFECT OF TWO TYPES OF LANDING GEARS ON THE PERFORMANCE OF TWO CLASSES OF AIRPLANES

LOW-WING CANTILEVER MONOPLANES

	Example I—High-drag airplane		Example II—Low-drag airplane	
Assumptions:				
High speed (gear retracted), miles per hour	135		220	
Thrust horsepower available	400		400	
Drag of airplane at high speed (gear retracted), pounds	1,110		682	
Wing loading, pounds per square foot	12		12	
AIRPLANES EQUIPPED WITH LOW-DRAG AND HIGH-DRAG GEARS				
Derived data:				
Landing-gear type	13 (mod. 1)	14c	13 (mod. 1)	14c
Angle of attack of wing, degrees	−1.0	−1.0	−3.0	−3.0
Drag of gea at 100 miles per hour, pounds [1] r	15.0	41.0	17.5	43.0
Drag of gear at high-speed condition, pounds	27.3	74.6	85.0	208.0
Percentage drag of airplane due to gear	2.4	6.3	11.1	23.4
Percentage reduction in high speed due to gear	.8	2.2	3.9	8.6
Reduction in high speed due to gear, miles per hour	1.1	3.0	8.6	18.9
Percentage of thrust horsepower absorbed by gear	2.4	6.3	11.1	23.4
Thrust horsepower absorbed by gear	9.6	25.2	44.3	93.6

[1] In presence of wing and fuselage, no engine.