REPORT No. 494

A FLIGHT INVESTIGATION OF THE LATERAL CONTROL CHARACTERISTICS OF SHORT WIDE AILERONS AND VARIOUS SPOILERS WITH DIFFERENT AMOUNTS OF WING DIHEDRAL

By Fred E. Weick, Hartley A. Soulé, and Melvin N. Gough

SUMMARY

Flight tests were made to determine the lateral control characteristics of short wide ailerons and spoilers, as a consequence of the promise shown in wind-tunnel tests by these devices as means of obtaining lateral control, particularly at angles of attack above the stall. Several forms of spoilers, front-hinge, rear-hinge, plain retractable, and saw-tooth retractable were tested alone and in combination with the ailerons. The tests were made with several different amounts of wing dihedral so that the effect of the yawing moments of the different lateral control combinations, which varied from large negative to large positive values, could be evaluated. In conjunction with the tests, observations were made to throw some light on the feasibility of operating the airplane with two controls instead of the present three.

The short wide ailerons gave no control above the stall. The spoilers gave some control in the stalled flying range, although the tests showed that for safe operation in this range lateral stability as well as lateral control is required. The spoilers were unsatisfactory, however, because of a lag between the movement of the control surface and the response of the airplane. A combination of the ailerons and spoilers appears to offer possibility for further development, the spoilers giving control beyond the stall and the ailerons by their immediate action covering up the lag of the spoilers in the normal flight range. The importance of the yawing action of a lateral control system was found to increase considerably with increasing dihedral. Large positive yawing moments, though an advantage above the stall, may be undesirable in the normal flight range because they tend to depress the nose of the airplane while rolling into steeply banked turns.

Two-control operation of the airplane in flight was found to be feasible with either the rudder and elevator combination or the aileron and elevator combination, but it limited the maneuverability and would therefore be desirable only with certain types of airplanes. The landing characteristics of an airplane with two controls have not been evaluated.

INTRODUCTION

The present investigation is an extension of a wind-tunnel investigation (reference 1) comparing various lateral control devices with particular reference to the conditions at high angles of attack, where conventional ailerons had been known to give unsatisfactory control. Some of the control arrangements tested in the wind tunnel gave sufficiently promising rolling and yawing moments at angles of attack above the stall to warrant tests of their effectiveness in flight.

One such control arrangement consisted of ordinary ailerons of wide chord and short span which, with the proper differential movement, gave reasonably high rolling moments at angles of attack above the stall, together with yawing moments that had small adverse, or negative,[1] values with respect to the wind axes but favorable, or positive,[1] values with respect to the body axes. The wide-chord ailerons, of course, had the disadvantage of high hinge moments, but it seemed likely that they might give fairly satisfactory control above the stall and that, if they did, some satisfactory means might be found for balancing the hinge moments and making the control force reasonably light. Another control device that seemed promising was the spoiler, which consists of a plate raised up from the upper surface of the forward portion of the wing. The rolling-moment coefficient given by the spoiler was found to increase as the angle of attack of the wing was increased to the stall (angle of attack for maximum lift coefficient), and reasonably high values were maintained to angles fairly well above the stall. The spoilers gave very high values of positive yawing moment with respect to wind axes, which it seemed might be advantageous in that they tend to make an airplane yaw or turn in the direction corresponding to the roll. Uncertainty existed concerning the effect of yawing moments on the lateral control of an airplane under various conditions of flight, as to which axes the

[1] These signs correspond to the N.A.C.A. standard usage only for the conditions of a right-hand turn, which is assumed throughout this investigation.

yawing moments should be referred in order to correspond to the pilot's reactions to the motion of the airplane, and as to the direction and magnitude of the yawing moments that pilots would consider most desirable.

The present tests were made to determine the characteristics of the short wide ailerons and spoilers in flight and also to throw some light on the effect of the yawing moments produced by lateral control devices. The ailerons were given different movements that gave yawing moments ranging from extremely adverse ones to only slightly adverse ones, with respect to the wind axes. The spoiler and aileron combination and the spoiler alone gave positive values of yawing moment of different magnitudes. As the effect of the yawing moment is coupled with the rolling characteristics of the airplane in yaw, the tests were made with the wing set at various amounts of dihedral from 0° to 9°.

The tests were mainly of a qualitative nature, the pilots following a standard program of tests with each control arrangement at each dihedral angle and making notes of their observations step by step. Where peculiar phenomena were noticed, instrument records were obtained to check the pilots' observations.

The standard program of tests was so arranged that, in addition to covering the lateral controllability with the various control devices under different conditions of flight and with various amounts of dihedral, information was obtained on some of the other flying and handling characteristics of the airplane. Observations were made of the stability with various amounts of dihedral and the feasibility (with certain stability and control characteristics and under certain conditions of flight) of using only one lateral control, the rudder or the ailerons, instead of both as at present.

A Fairchild 22 airplane was used for the tests. In order to obtain a comparison of the short wide ailerons and spoilers with a representative example of a conventional lateral control system, the tests were also made with the standard ailerons for this airplane.

APPARATUS AND TESTS

The Fairchild 22 airplane used for the tests is a small parasol monoplane. Its general appearance is shown in figure 1 and its principal dimensions are given in the 3-view drawing of figure 2. The standard lateral control system for the airplane consists of long-span narrow-chord ailerons fitted to the wing of an N-22 airfoil section that has circular tips and is set at ½° dihedral (fig. 3). The ailerons are unbalanced and have a differential motion.

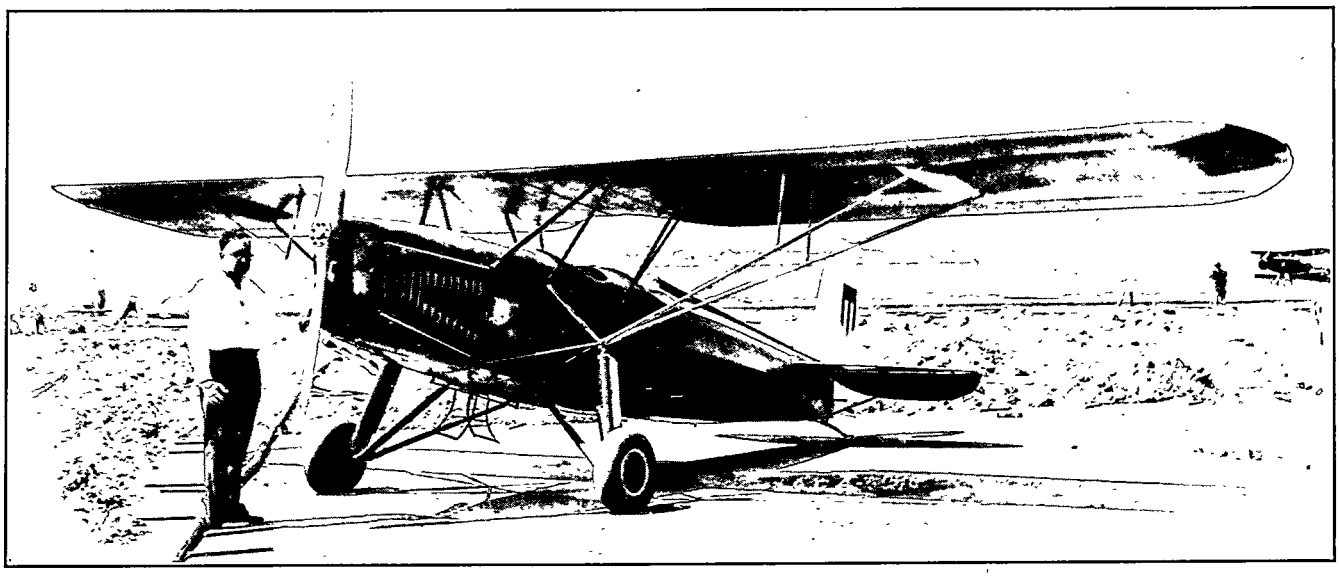

FIGURE 1.—Fairchild 22 airplane.

For tests of the short wide ailerons and spoilers, a special wing was used (fig. 4). This wing had the same airfoil section as the standard wing, but was made with square tips so as to correspond more closely to the model used in the wind-tunnel tests of reference 1. It was adjustable from 0° to 10° dihedral and was originally equipped with short wide ailerons and front- and rear-hinge spoilers. The short wide ailerons could be operated either with an equal up-and-down movement (fig. 4 (a)) or differentially (fig. 4 (b)). With both movements the ailerons could be rigged at 0°, as shown, or up 10°. The rear-hinge spoilers (fig. 4 (b)) were arranged to couple to the differential ailerons so that their hinge moments would to some extent balance those of the ailerons and reduce the stick force required. The front-hinge spoilers (fig. 4 (c)) were operated by a special control stick ahead of the main one so that in case they did not give satisfactory control the pilot would still be able to use the ailerons. The arrangement also permitted the pilot to operate the front-hinge spoilers and ailerons together.

During the tests, for reasons noted later, the front-hinge spoilers were replaced by retractable spoilers (fig. 4 (d)). The area of the retractable spoilers was later reduced by the removal of the cross-hatched portion of figure 4 (d), and finally saw teeth were cut into the remaining area (also shown in fig. 4 (d)). The mechanical linkage of the differential ailerons and the rear-hinge spoilers was modified to give a movement of 17° up and 5° down to the ailerons and 14° to the spoilers. The rear-hinge spoilers were also modified by reducing the area as shown on figure 4 (a). The movement of the control surfaces relative to the control

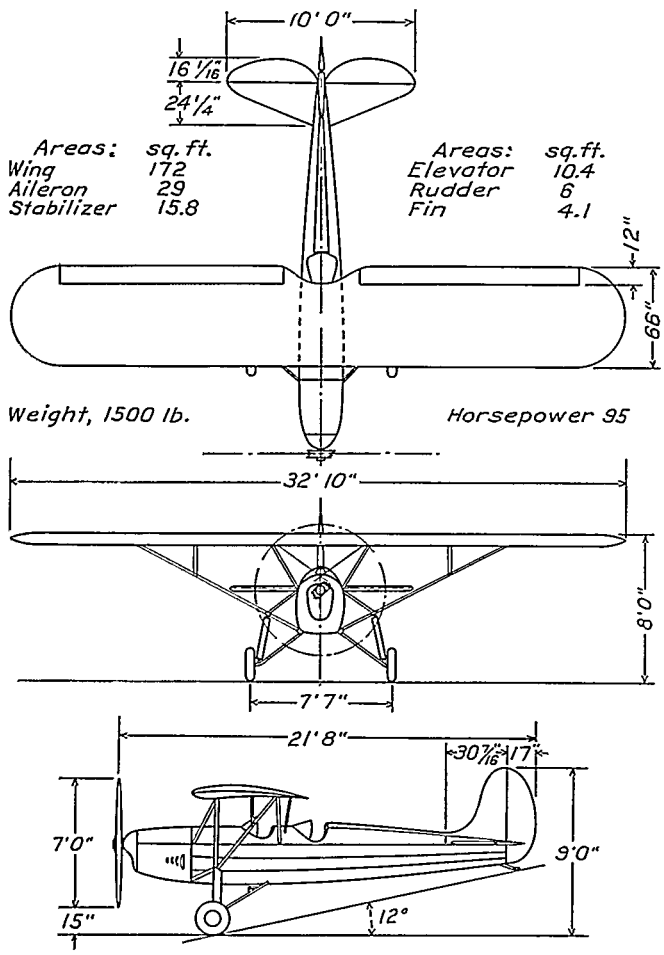

FIGURE 2.—Three-view drawing of Fairchild 22 airplane.

stick for all control arrangements with the exception of the retractable spoilers, where the movement was similar to that for the front-hinge spoilers, is shown in figures 5 to 9, inclusive.

The tests with the special wing were made at 0°, 3°, 6°, and 9° dihedral. As a result of the various modifications made during the tests not all of the control devices were tested with each dihedral. Table I shows the various arrangements and the dihedral angles at which they were tested.

The tests consisted of a standard series of maneuvers designed to show qualitatively the stability and lateral

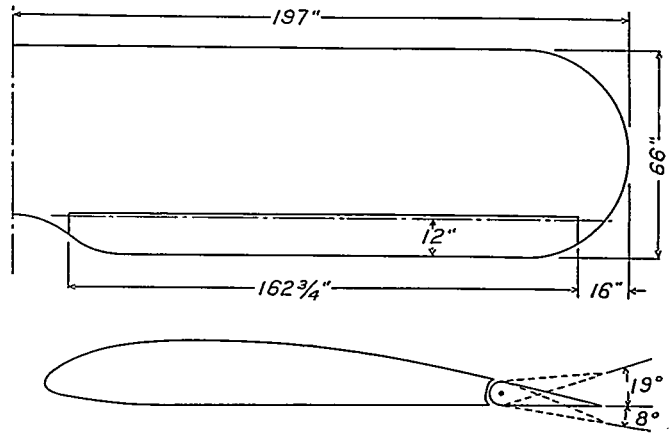

FIGURE 3.—Standard wing for Fairchild 22 airplane.

control characteristics of the airplane and were performed with the various control devices and with the various amounts of dihedral, the pilots making notes on mimeographed forms provided for the purpose. (See forms A to E, inclusive.) The forms A, B, and C, covering the stability characteristics and the roll due to the rudder, were filled out once for each dihedral angle. Forms D and E were filled out for each different control arrangement at each dihedral tested. For each condition form D was filled out three times; once for normal three-control turns, once for turns made with only the elevator and rudder, and once for turns made with only the elevator and the particular lateral control device being tested.

TABLE I.—*Dihedral angle corresponding to different control arrangements*

Wing	Lateral control arrangement	Dihedral angle, degrees
Standard	Ailerons [1] original differential	½.
Special	Ailerons [2] equal up-and-down—rigged 0°	0, 3, 6, 9.
Do	Ailerons equal up-and-down—rigged 10° up	0.
Do	Ailerons original differential—rigged 0°	0.
Do	Ailerons original differential—rigged 10° up	0.
Do	Ailerons modified differential—rigged 0°	3, 6.
Do	Ailerons modified differential—rigged 10° up	3, 6, 9.
Do	Ailerons original differential—original rear-hinge spoilers	0.
Do	Ailerons modified differential—reduced rear-hinge spoilers	3, 6, 9.
Do	Front-hinge spoilers	0.
Do	Long plain retractable spoilers	0.
Do	Short plain retractable spoilers	3, 6, 9.
Do	Ailerons-modified differential—short plain retractable spoilers.	3, 6, 9.
Do	Saw-tooth retractable spoilers	9.

[1] Long narrow ailerons.
[2] Short wide ailerons on all arrangements with special wing.

The tests were made by two pilots [2] but in only a few cases did they both fly the same arrangement of the control system with the same dihedral, the necessary checks being obtained by the correlation of the data for a given condition with the remainder of the data. Where there appeared to be inconsistency in the individual reports the questionable points could usually be cleared up by discussing them with the pilots. In general, however, the pilots' observations were fairly consistent and it seems safe to conclude that all the most important results were satisfactorily observed but that fine distinctions may be uncertain.

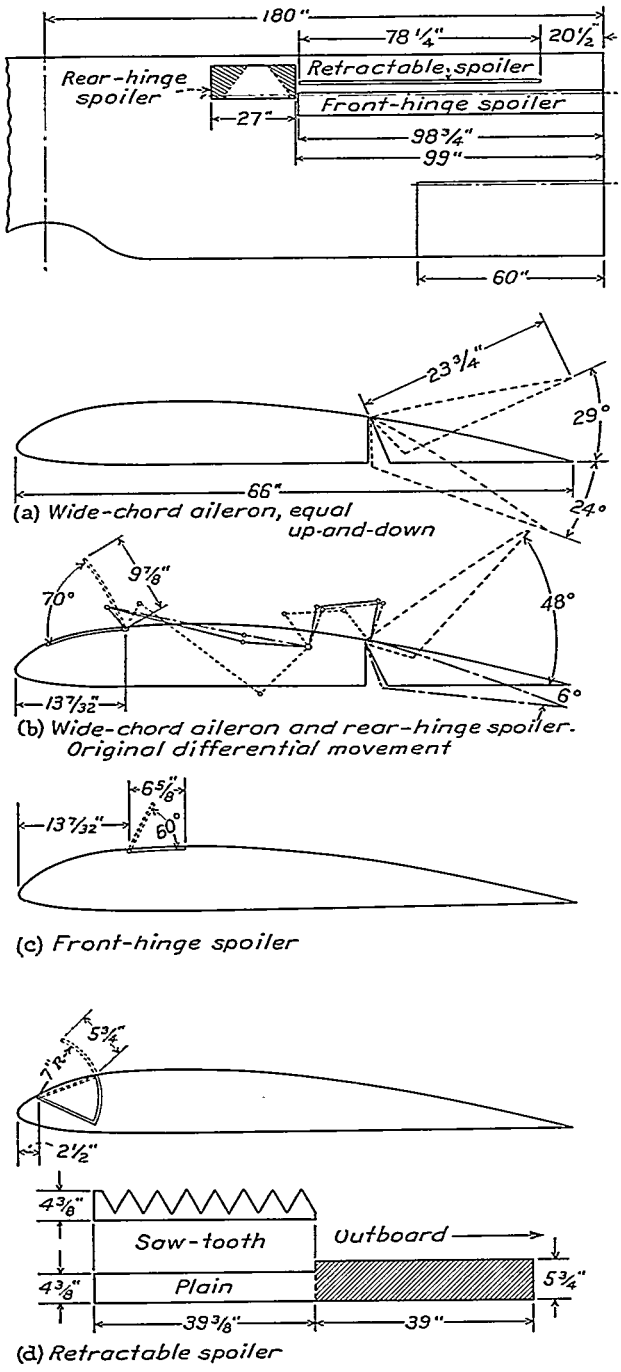

FIGURE 4.—Special wing for Fairchild 22 airplane.

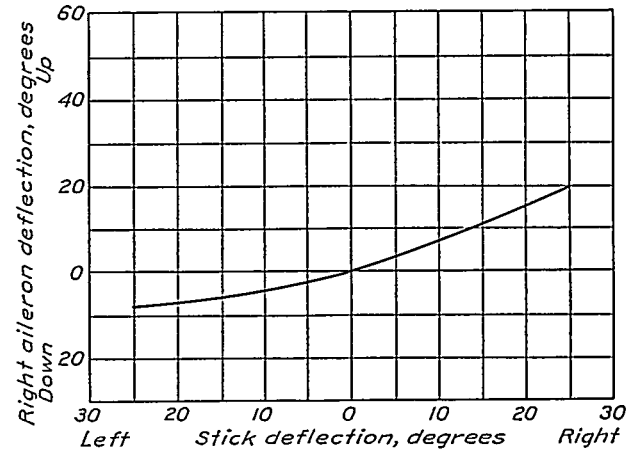

FIGURE 5.—Relative movement of the standard ailerons.

In a few cases in which a peculiar characteristic, a lag or delay in the response of the airplane to a control movement, was noted by the pilots, instrument data were taken to obtain more complete information regarding the phenomenon. For these tests, instruments were installed to record simultaneously the position of

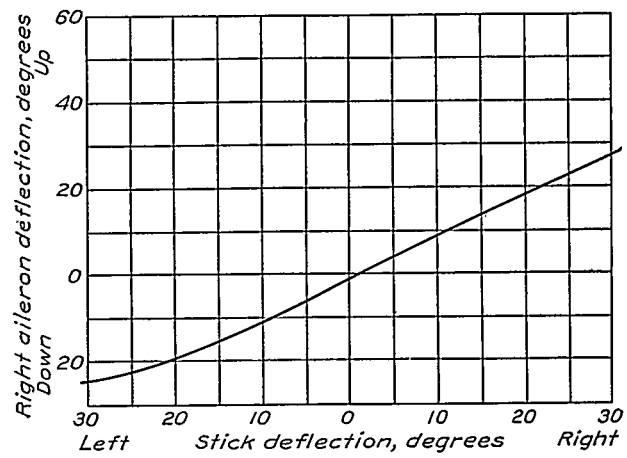

FIGURE 6.—Relative movement of the short wide ailerons, equal up-and-down.

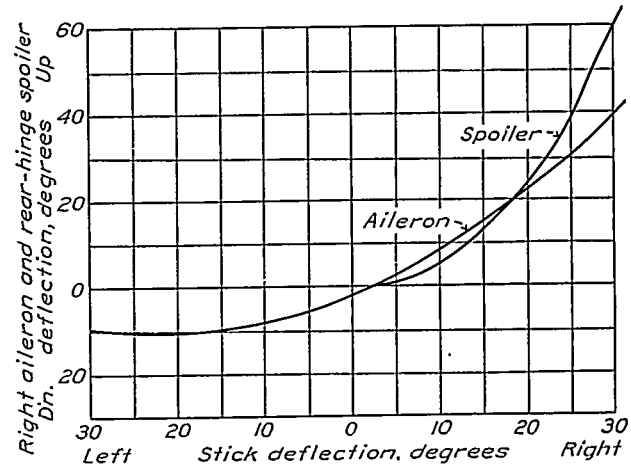

FIGURE 7.—Relative movement of the short wide ailerons, original differential, and rear-hinge spoilers.

[2] One of the test pilots, Melvin N. Gough, is also one of the authors.

Form A

LONGITUDINAL STABILITY

STATIC.—Trim for cruising, and with throttle and stabilizer constant, nose airplane over slowly until air speed is 5 miles per hour higher—then release control stick. Does nose rise? -------- Repeat, pulling stick back until air speed is 5 miles per hour lower than cruising before releasing. Does nose drop? --------

Trim for throttled glide at above cruising speed (m.p.h.), and push stick forward until speed increases 5 miles per hour, then release stick. Does nose rise? --------
Repeat, decreasing speed 5 miles per hour. Does nose drop? --------

Trim for throttled glide, stabilizer full tail heavy (m.p.h.), and push stick forward until speed increases 5 miles per hour, then release stick. Does nose rise? --------
Repeat, decreasing speed 5 miles per hour. Does nose drop? --------

DYNAMIC.—Trim for cruising (m.p.h.), push stick forward, causing dive, then release it. Do oscillations die? --------
How rapidly?
Repeat, pulling stick back before releasing. Do oscillations die down? -------- How rapidly?

Trim for throttled glide at above cruising speed and push stick forward, then release it. Do oscillations die? -------- How rapidly?
Repeat, pulling stick back before releasing. Do oscillations die down? -------- How rapidly?

Trim for throttled glide, stabilizer full tail heavy (m.p.h.), and push stick forward, then release it. Do oscillations die down? --------
How rapidly?
Repeat, pulling stick back before releasing. Do oscillations die down? -------- How rapidly?

Remarks:

Form B

DIRECTIONAL STABILITY

3,000-foot altitude

From level flight at indicated air speed of miles per hour, perform a medium right skid, holding wings level. Release rudder, keeping wings level with ailerons, and note motion in yaw:

Repeat to left. Note motion:

ROLLING DUE TO RUDDER

In straight level flight (cruising) at miles per hour, apply full right rudder gently and note direction and amount of bank:
Right wing ---------- ------ degrees.
Repeat with left rudder.
Right wing ---------- ------ degrees.
Repeat with right rudder moved suddenly.
Right wing ---------- ------ degrees.
Repeat with left rudder moved suddenly.
Right wing ---------- ------ degrees.

In throttled glide just unstalled (m.p.h.) apply full right rudder gently and note direction and amount of bank:
Right wing ---------- ------ degrees.
Repeat with left rudder.
Right wing ---------- ------ degrees.
Repeat with right rudder moved suddenly.
Right wing ---------- ------ degrees.
Repeat with left rudder moved suddenly.
Right wing ---------- ------ degrees.

In throttled glide fully stalled (m.p.h.) apply full right rudder gently and note direction and amount of bank:
Right wing ---------- ------ degrees.
Repeat with left rudder.
Right wing ---------- ------ degrees.
Repeat with right rudder moved suddenly.
Right wing ---------- ------ degrees.
Repeat with left rudder moved suddenly.
Right wing ---------- ------ degrees.

Form C

LATERAL-STABILITY TESTS

All to be made from approximately 3,000-foot altitude

From *throttled glide* with stabilizer set full tail heavy (elevator free, indicated air speed 62 m.p.h.) and rudder balanced, perform the following maneuvers:

(1) Medium slip to right—same air speed. When steady, release all controls and note motion:

Repeat to left. Note motion:

From *level flight* at indicated air speed of 62 miles per hour, with stabilizer adjusted for trim (elevator free) and rudder balanced:

(2) Medium slip to right—same air speed. When steady, release all controls and note motion:

Repeat to left. Note motion:

If airplane is unstable in latter run, perform following: From *level flight* at indicated air speed of miles per hour, with stabilizer adjusted for trim (elevator free) and rudder balanced:

(3) Medium slip to right—same air speed. When steady, release all controls and note motion:

Repeat to left. Note motion:

Remarks:

Form D

TURNS AND SPECIAL MANEUVERS

3,000-foot altitude

Note any peculiarities, including slipping or skidding in the entrance, the steady position, or the recovery, in the following turns:

Controls

CRUISING ------ miles per hour.
1. Wide Turn Right---------- Left----------
2. Medium Turn Right---------- Left----------
3. Min. Rad. Turn Right---------- Left----------
4. Try following straight path in gusty air----------

THROTTLED GLIDE, JUST UNSTALLED ------ miles per hour.
1. Wide Turn Right---------- Left----------
2. Medium Turn Right---------- Left----------
3. Min. Rad. Turn Right---------- Left----------
4. Try following straight path in gusty air----------

THROTTLED GLIDE, FULLY STALLED ------ miles per hour.
1. Wide Turn Right---------- Left----------
2. Medium Turn Right---------- Left----------
3. Min. Rad. Turn Right---------- Left----------

Try slow roll Right---------- Left----------

Form E

General questionnaire to supplement tests on aileron control

1. Are ailerons heavy on the ground? _____
2. While taxying are they easily handled? _____
   Effective? _____
3. Is there a possibility of them becoming jammed by foreign bodies? _____
4. Are the ailerons easy to operate and effective under the following conditions:

	Stick force	Effectiveness in roll	Effect of yaw Due to ailerons? Desirable?
High speed			
Cruising			
Gliding just unstalled near ground in gusty air			
Fully stalled, gliding			
Fully stalled, power on			
Quick maneuvers, such as sharp turns			

5. Is a sideslip easy to start? _____ Stop? _____
6. Is a skid easy to start? _____ Stop? _____
7. Do the ailerons vibrate? _____ Twist? _____
8. Any effect on ground loop? _____
9. Do you like them? _____
   Why? _____
10. Could you get used to them? _____
11. Would you ever like them? _____

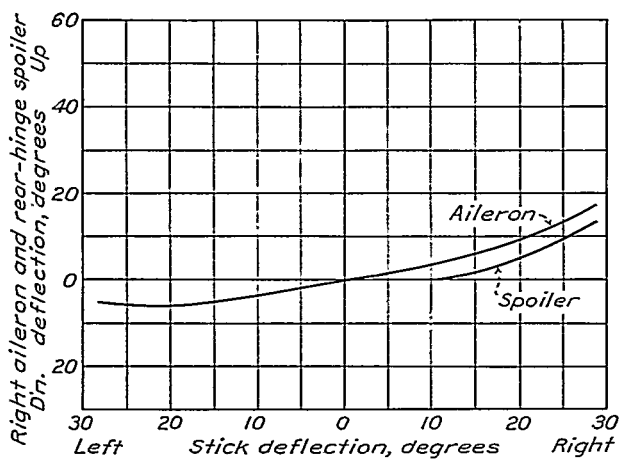

FIGURE 8.—Relative movement of the short wide ailerons, modified differential, and rear-hinge spoilers.

the lateral control device and the rolling velocity of the airplane. The test procedure consisted of recording the rolling velocity for the first few seconds following an abrupt movement of the lateral control device from neutral.

CHARACTERISTICS DESIRABLE IN A LATERAL CONTROL SYSTEM

There is some question as to what characteristics are most desirable in a lateral control system and its seems advisable to insert the present views of the authors on this subject before discussing the results of the flight tests. These views are based primarily on a general study of the lateral control problem and the flying experience of the two test pilots, but they have also been influenced in important respects by the present tests.

ROLLING ACTION

Rolling moment.—The rolling moment indicates the possibility of the pilot's maintaining the airplane on an even keel during flight through gusty air and of the time required to attain the maximum rate of roll for maneuvering. It is probable that the upper limit of the value of the rolling moment desired depends only on structural considerations and on the reactions of the occupants of the airplane to the acceleration produced by the moment, although this fact has not been definitely established. At the start of the wind-tunnel investigation of lateral control devices (reference 1,

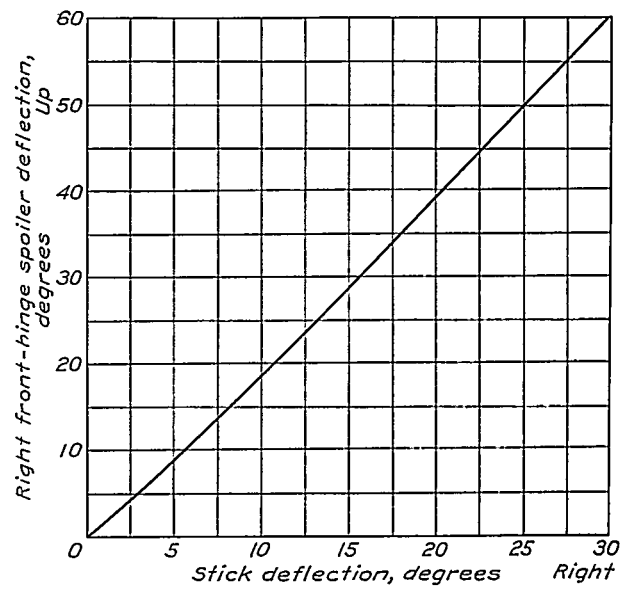

FIGURE 9.—Relative movement of the front-hinge spoilers.

part I) a criterion, representing the probable satisfactory lower limit, was selected on the basis of the acceleration obtained with conventional ailerons at 10° angle of attack. The value of this criterion corresponds to a lateral movement of the center of pressure of 7.5 percent of the span. Recent experience indicates that this value is likely to be ample for any condition of flight that might be encountered, and is therefore a desirable value to attain. Where a compromise must be made, however, between the rolling moment and some other characteristic of the control system, particularly the control force, a decidedly lower value of the rolling criterion, possibly as low as that corresponding to a lateral displacement of the center of pressure of 3 or 4 percent of the span, may be used and found reasonably satisfactory for practically all conditions of flight.

Maximum rate of roll.—The maximum rate of roll that can be attained with a lateral control device is to

some extent an indication of the maneuverability of the airplane. This characteristic of the lateral control system, however, is in most, although not necessarily in all, cases directly proportional to the rolling moment, so that the two characteristics may generally be considered together. Thus, the lower limit for the rate of roll may be taken as that accompanying a rolling moment giving the desired value of the rolling criterion. Conversely, there is apparently an upper limit to the desirable rate of roll which will impose an upper limit on the rolling moment. The upper limit of the rate of roll is taken as that above which pilots are not likely deliberately to go because of the practice and skill required to stop the rolling velocity, when attained, with the airplane in a desired attitude. This limit has not yet been definitely established, but is believed to have been exceeded in several present-day airplanes at and above the cruising speed.

Additional requirements.—Two further desirable characteristics of the rolling action are: First, the response of the airplane in roll to any movement of the lateral control surface should be immediate, any noticeable delay or hesitation in the action being objectionable. Second, the action should be so graduated that the acceleration and maximum rate of roll increase smoothly and regularly as the stick deflection is increased.

YAWING ACTION

The tests of the present investigation indicate that the pilots' observations of yawing action due to the lateral control correspond to the yawing moments as measured with respect to the wind axis. If the yawing moments are of moderate magnitude, their actual value and even their direction would appear to be unimportant within the usual unstalled flight range, although it seems probable that an entire absence of yawing due to the aileron control would be more desirable. Large negative values of the yawing moments are known to be undesirable because they tend to make the airplane turn away from the desired bank, thus introducing a sideslip that results in a rolling moment opposing that of the ailerons. The present tests have shown that large positive yawing moments may also be undesirable in the normal flight range because they tend to lower the nose of the airplane during the entrance to tight turns. The practical importance of the yawing action of the ailerons depends upon its relation to their rolling action and to other characteristics of the airplane, such as the dihedral of the wings. For example, above the stall, if the direct rolling action is poor, large positive yawing moments may be of considerable assistance in maintaining lateral control.

CONTROL FORCE

It seems desirable, from the pilot's point of view, to have the control force as light as is consistent with maintenance of the feel of a definite neutral position, and to have increasing deflection of the stick require the application of a noticeably increasing force. As the rolling action should also be related to the stick deflection, an increasing effort on the part of the pilot will be required to obtain greater rolling action. It is probably desirable also that the ratio of effort expended to rolling action obtained should be independent of the speed of the airplane; that is, if the effectiveness of the lateral control increases with speed, the required stick forces should also be heavier at high speeds, so that there will be no tendency to overcontrol at these speeds. The control force is of great importance in obtaining satisfactory lateral control. As shown by the present tests, an airplane that requires light control force apparently seems much more controllable to a pilot than one that requires heavy control force, even though for full deflection the heavier control may be considerably more powerful than the lighter one.

RESULTS

LATERAL CONTROL CHARACTERISTICS

Standard Fairchild 22 ailerons.—The standard ailerons of the F–22 are considered by the pilots to be representative of good conventional lateral control systems. The rolling action they produce is satisfactory up to the stall, although it noticeably decreases with decreasing air speed. Although the yawing action is adverse, it causes no annoyance to the pilots in the normal flying range, being evidenced only by a slight movement of the nose away from the bank before the airplane starts turning in the desired direction, and by a momentary increase in the rate of rotation when the ailerons are displaced for recovery from the turn. The required stick forces are light and are proportional to the deflection obtained for normal maneuvers. For abrupt maneuvers, the forces required are definitely heavier. The stick force increases with speed, as does the control effectiveness. In stalled flight, however, the ailerons give no control, rotation continuing in either direction against full opposite aileron deflection.

Short wide ailerons with equal up-and-down movement, rigged 0°.—With the short wide aileron with equal up-and-down movement rigged 0° and with other control systems tested on the special wing, excepting the saw-tooth spoilers, only the characteristics with the wing at 0° dihedral, or at 3° dihedral in those cases where tests were not made at 0°, will be considered at this point. The effect of dihedral will be treated in a later section. Reference to table I will show the dihedral angle for the tests of the particular control device under discussion.

The characteristics of the short wide ailerons with equal up-and-down movement were, with two important exceptions, generally similar to those of the standard ailerons. The decrease in effectiveness as the

stall was approached was greater with the short wide ailerons, so that the airplane would roll out of steeply banked turns against full aileron deflection just below the stall, whereas the standard ailerons gave satisfactory control up to the stall. The stick forces, as expected, were definitely greater with the short wide ailerons. In a sideslip it was found that the wide-chord aileron on the forward wing tip tended to trail up sufficiently to overbalance the inherent banking effect of the wings, so that at 0° dihedral a fairly heavy force had to be applied to the stick to hold the aileron down and to prevent the wing from "digging in." Another point, having no connection with the aerodynamic characteristics of the control system, was noted: During taxi runs, any roughness of the ground caused movement of the ailerons and, because of their large unbalanced mass, induced annoying reactions in the control column.

Short wide ailerons with equal up-and-down movement rigged up 10°, with original differential movement rigged 0°, and with original differential movement rigged up 10°.—With the other arrangements the short wide ailerons had the same objectionable characteristics as previously noted. The progressive variation in the yawing action shown by wind-tunnel tests was observed in flight. For no arrangement did the pilots consider the yawing action positive. Probably because the short wide ailerons had the lowest yawing moment with differential movement and rigged up 10°, this arrangement gave the greatest control near the stall, although in no case was the control above the stall satisfactory.

Short wide ailerons with modified differential movement rigged at 0° and up 10°.—With the modified differential movement the short wide ailerons, though less powerful for full deflection, were considered superior to the arrangements of these ailerons previously tested because of the lighter stick forces required. These forces, however, were still slightly greater than those for the standard ailerons. Satisfactory turns were made right up to the stall and above the stall the control with the modified differential movement was about the same as with the original differential movement, although the available deflections were less.

Short wide ailerons with original differential movement and original rear-hinge spoilers.—The original rear-hinge spoilers did not move appreciably until the aileron was deflected 5°. Thus, for maneuvers requiring only small aileron movements, the spoilers did not come into action and the control was comparable to that obtained with differential ailerons alone. When sufficient movement was given to the stick to deflect the spoilers, the resultant roll was too violent; in addition, the control force changed sign after the roll had started so that, whereas it was necessary to apply a fairly heavy force to deflect the spoilers, an equally large force was required to return the stick to neutral. It is worth noting that this condition of overbalance was not indicated by the usual wind-tunnel tests without rotation. Apparently, rotation decreases the hinge moments of the ailerons without affecting those of the spoilers.

The yaw was positive but small with this control system. The combination of ailerons and rear-hinge spoilers gave definite control above the stall and could be used to start or stop rotation of the airplane. The airplane, however, was laterally unstable in the stalled-flight range and its flying characteristics were poor, constant juggling of the lateral controls being required to keep the wings level. In this range, control depended entirely on the spoilers and was not obtained until the stick was deflected enough to operate them. The effectiveness of the system did not increase smoothly with stick deflection. The greatest increase occurred as the spoiler came into operation. Very little improvement in the effectiveness was noted from this point on to full stick deflection.

Short wide ailerons with modified differential movement and reduced rear-hinge spoilers.—Because the combination of short wide ailerons and rear-hinge spoilers had given fair control above the stall an attempt was made to improve its characteristics in the normal flying range. Reduction of the movement appeared to offer the greatest promise. The previous tests had shown that only a small deflection of the spoilers was necessary to obtain practically the full rolling action of the device. It therefore seemed probable that changing the mechanical linkage between the control stick and the control surfaces, so that full deflection of the stick would give only a small deflection of the spoilers, would reduce the stick force and make the control system smoother in action without appreciable loss in the control effectiveness. With the smaller movement the control action was fair. The stick forces were lighter but the overbalanced condition, although relieved, was still present. The spoiler area was then reduced progressively until the combination lost its effectiveness beyond the stall, although a slight overbalance still remained.

Front-hinge spoilers.—When the front-hinge spoilers were first tried the pilots noticed that the airplane apparently did not start to roll until the control stick had been given a medium amount of deflection, after which the rolling velocity suddenly built up to a much higher value than had been experienced with any control system tested previously. This characteristic made it impossible to perform smoothly maneuvers requiring the coordination of the spoilers with the elevator or rudder and led to overcontrolling when an attempt was made to keep the wings level in gusty air. A closer inspection of the spoiler action, however, disclosed that for any spoiler movement there was an appreciable lag or delay between the movement itself and the start of the desired rotation in roll of the airplane. No lag

was apparent in the yawing action. In order to substantiate the pilots' findings, records were made of the rotation of the airplane in roll immediately following a movement of the stick. A specimen time-history of the motion is shown in figure 10, together with similar information for the standard ailerons. The records showed that the delay before rotation started was of the order of a quarter of a second and that the final rate of roll was about three times as high as that obtained with the standard ailerons. The lag was present at all speeds.

The time lag seems surprisingly small to have much effect on the control obtained with spoilers, but apparently it is sufficient to prohibit the use of the spoilers close to the ground because of the danger of overcontrolling. The system appeared to the pilots to have no "graduation" in normal operation. The airplane either rolled violently or not at all. When the stick was deflected step by step and held at each position until the action occurred, however, the pilots reported that control was fairly well graduated, as had been indicated by the wind-tunnel tests. Even with complete knowledge of the rolling characteristics of the spoilers, the pilots found it impossible to perform in a satisfactory manner maneuvers requiring coordination of the spoilers with either of the other controls.

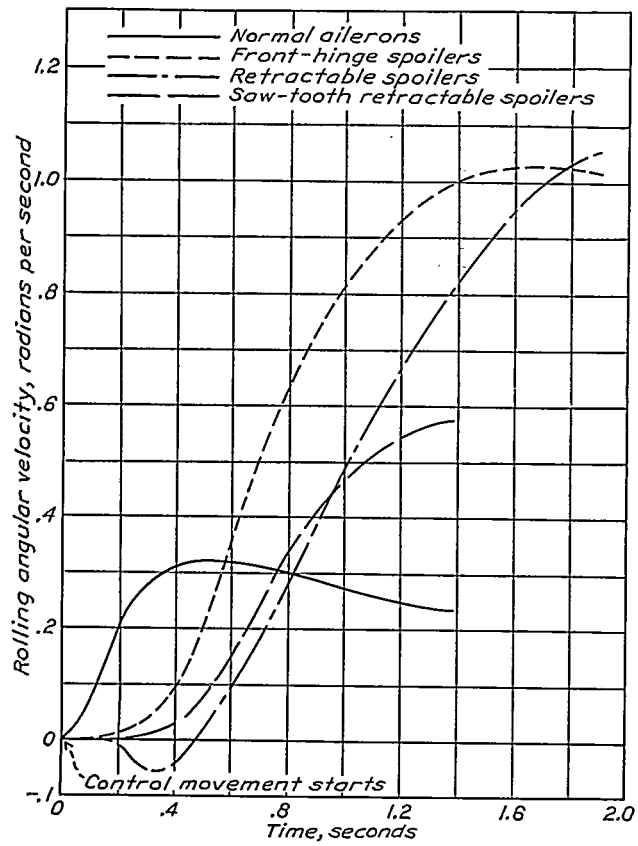

FIGURE 10.—Time-history curves showing the lag characteristics of various control systems. Indicated air speed, 50 miles per hour; full control deflection.

The yawing moments of the spoilers were large and positive, as had been expected. Although the lag in the rolling action made it difficult to obtain definite observations of the positive or favorable yawing action, it was noted that when a rapid entry was made into steeply banked turns below the stall, the yawing action tended to depress the nose of the airplane as soon as an appreciable angle of bank was attained, and considerable trouble was experienced in holding the airplane to the desired flight path. The spoilers gave a fair degree of control above the stall, probably through action of the positive yawing moment. It was impossible to determine whether the spoilers had lag beyond the stall, because of the general instability of the airplane in this range. The control force was reasonably light.

Plain retractable spoilers.—It was considered possible that the lag might be reduced by creating a more abrupt disturbance of the air flow than that caused by the front-hinge spoilers; for this reason they were replaced by spoilers of the retractable type, in which the spoiler surface is contained within the wing and moved out normal to the wing surface (fig. 4 (d)). The construction of the wing necessitated that the retractable spoilers be mounted forward of the position occupied by the front-hinge spoilers. Instrument records from tests of this type of spoiler showed that the lag was greater than with the front-hinge spoilers, probably because of the more forward location of the retractable spoiler; also, a definite initial rolling in the wrong direction occurred. In other respects, the two types of spoilers had about the same characteristics. Removal of the outer portion of the spoiler reduced the violence of the rolling action.

Saw-tooth retractable spoilers.—Before the retractable spoilers were rejected as controls to be used by themselves, a further attempt was made to eliminate lag. By this time, it was evident that the action of the spoilers depended almost entirely on their effectiveness in breaking down the flow over the after portion of the wing and that the objectionable lag was caused by the time required to bring about this breakdown. It was suggested that with a saw-tooth spoiler, instead of the air being deflected upward from the wing, turbulence might be set up by the sides of the teeth and that this turbulent flow might pass directly along the wing surface, and cause more rapid destruction of the lift.

This form of the spoiler was tested at 9° dihedral after all other tests had been completed. The lag was found to be slightly reduced but the reduction cannot be directly attributed to the shape of the spoiler, for the dihedral, as is noted later, influences the apparent lag of such devices.

Short wide ailerons with modified differential movement and plain retractable spoilers.—The combination of short wide ailerons with modified differential movement and plain retractable spoilers had not been included in the original program, although its possibilities had been appreciated. It is, in effect, similar to the combination of ailerons and rear-hinge spoilers without

the direct balancing of hinge moments. The lag of the spoilers was in part covered up by the immediate action of the ailerons. A slight increase in the rate of roll could be noticed when the spoilers became effective, but it was not objectionable. The yawing action was positive but, of course, less than with the spoilers alone. As with the other spoiler arrangements, the system gave control at angles above the stall.

EFFECT OF DIHEDRAL

In order to make an appraisal of the effect of dihedral on the characteristics of the various lateral control systems, it was first necessary to determine the effect of dihedral on the stability characteristics of the airplane. It was known that the dihedral principally affected the rolling characteristics of the airplane under conditions of sideslip. It was not expected that the longitudinal stability would be greatly affected by the dihedral change and the flight tests showed this to be true. The airplane was longitudinally stable with all the dihedral angles for the conditions tested and, as far as the pilots could determine, the characteristics were the same in all cases. An attempt to separate the directional stability characteristics from the more general lateral stability characteristics was successful only at 0° dihedral, where the rolling due to sideslip was small. There the tests indicated that the airplane had a fair degree of directional stability.

With 0° dihedral the airplane was definitely unstable laterally. When deliberately caused to sideslip in either direction, it would turn in the direction of the initial slip and spiral indefinitely whether the controls were freed or returned to neutral. By an increase of the dihedral to 3°, the stability characteristics were somewhat improved. In this condition, the airplane was unstable only with the controls freed. With the controls neutralized the airplane would recover to straight flight after a few oscillations. With 6° dihedral the airplane was stable both with free controls and with the controls returned to neutral.

The airplane exhibited instability of a different type with 9° dihedral and controls free. When sideslip was started to the right, for example, and the controls freed, the airplane would turn directly to the left away from the initial sideslip (whereas with 0° dihedral, it had turned *into* the sideslip) and would commence a left nose-down spiral accompanied by a rapidly increasing air speed. When the controls were returned to neutral during a sideslip, the airplane returned to straight flight with no apparent oscillation.

In connection with these tests it was noted that the rudder, when freed, had a greater tendency to deflect to the right than to the left, thus introducing some asymmetry in the motion following a right or left sideslip. The reason for this has not been ascertained. The observations on the lateral stability previously given represent average conditions for the two directions of sideslip. It was also observed that in a sideslip the wide-chord aileron of the forward wing would trail up when the controls were released and stay there through all the ensuing motion until straight flight, if the airplane were stable, was regained. If the airplane was unstable, the ailerons remained in the initial position taken, regardless of the form of the instability.

With the wing set at 0° dihedral the rudder gave almost independent directional control, the banking due to the yaw produced being very slight when the ailerons were held in neutral. Turns could be made without the ailerons but they were characterized by skidding during entry and sideslipping during recovery, the amount depending on the abruptness with which the rudder was used. As noted previously, if the ailerons were freed during rudder movements, the trailing of the outer ailerons might result in the wing digging in and banking in the wrong direction for the turn; a deliberate sideslipping therefore required careful handling of the ailerons. The increased banking effect obtained with 3° dihedral eliminated all tendency of the forward wing to dig in and made sideslips easier to perform. The effect was noticeable also when rudder turns were made. Tight, or steeply banked, rudder turns, however, were difficult to enter as the airplane would nose down during the time taken to roll to the desired angle of bank. If an attempt was then made to bring up the nose with the rudder, the airplane would start sideslipping and would roll out of the bank. The airplane always banked in the direction of the turn set up by the rudder, whether the ailerons were held in neutral or freed. With 6° dihedral, the rudder had a powerful banking effect and it was difficult, with full aileron deflection, to hold the wings level for any but small amounts of sideslip. The roll that could be generated by the rudder at 9° dihedral was so great that the rudder had to be handled with discretion and sideslipping was practically impossible. With 6° and 9° dihedral, the airplane showed a progressively greater tendency than at 3° to nose down and roll out of rudder turns.

The effect of the dihedral on the control obtainable with the different lateral control systems depended on the magnitude and direction of the yawing action of the control systems. The wind-tunnel tests and the previous flights had shown that, of the control systems tested with different degrees of dihedral, the short wide ailerons with equal up-and-down movement gave the largest negative yawing moments. With this control system the negative yawing moment, which at 0° dihedral had offered no difficulty, became increasingly important when the dihedral was increased to 3°, 6°, and 9°. With 9° dihedral, the rolling moment induced by the yawing action of the ailerons was practically equal to the rolling moment of the ailerons themselves. Turns could be made at all dihedral angles, however, with only the ailerons and elevators.

The negative yawing moment was apparent from the skidding and sideslipping it caused at the start and completion of the turns. With 0° dihedral, opposite aileron movement was necessary to force the airplane out of the bank at the end of the turn. With the higher dihedral angles, the sideslipping set up on recovery from an aileron turn was sufficient in its effect to return the wings to level without the necessity for application of opposite aileron. The amount of aileron and stick deflection necessary was considerably greater for turns with the larger dihedral angles. At all dihedral angles difficulty was experienced in making steeply banked turns without the rudder, as the nose tended to drop. At the higher dihedral angles, the sideslipping accompanying a steeply banked turn induced a rolling moment large enough to roll the airplane out of the bank against full aileron.

The change of dihedral had much the same effect on the control characteristics of the aileron with differential movement rigged both at 0° and up 10° as with the equal up-and-down movement. The difference in the yawing moment between these various conditions was noticeable. The best turning characteristics were observed with the differential ailerons rigged up 10°. But even with this arrangement the control was poor at 9° dihedral, a detailed report indicating that at 64 m.p.h., if the rudder and elevator were fixed in neutral, a full deflection of the ailerons would result in a slow roll in the desired direction but accompanied by a yawing motion away from the desired turn. After a roll of about 10°, the sideslip induced by the yawing action resulted in a rolling moment opposed to that of the ailerons sufficient to damp out the rolling velocity. The airplane would then maintain straight flight, holding a yawed and banked attitude.

The combination of differential aileron and rear-hinge spoilers with their small, though negative, yawing moment was not much affected by the dihedral change, except that at the higher dihedral angles an increasing force was required for turning. The yawing moment—which does not have the lag in its action as does the rolling moment—was an aid to the retractable spoilers at the higher dihedral angles, as the roll due to the yaw was great enough to eliminate the apparent lag with dihedral angle of 6° or more. With the 6° dihedral angle the airplane would roll directly on application of the spoilers, but an abrupt increase of roll was noticed when the flow over the spoilers broke down completely. At 9° dihedral, the lag was not in any way noticeable.

DISCUSSION

Short wide ailerons.—These ailerons when used by themselves gave no lateral control above the stall for any arrangements tested. Apparently, the changes in the magnitude of the yawing moment that were obtained by using a differential instead of an equal up-and-down movement and by rigging the ailerons up 10° were not sufficient to influence appreciably the control characteristics above the stall. In this connection it should be noted that, whereas at the start of the wind-tunnel tests of reference 1 it was thought that pilots would base their reactions on the yawing moment about the body axes of the airplane, and the moments given in the reference report were accordingly given about the body axes, the pilots' reports of the present flight tests show definitely that their reactions correspond more closely with what would be expected from a consideration of the yawing moments about the wind axes.

In the opinion of the pilots, the wide-chord ailerons were distinctly inferior to the standard ailerons. These opinions were based primarily on stick forces because neither set of ailerons gave control in the stalled-flight range, and there was no question of sacrificing part of the desirable characteristics in the normal flying range to obtain some benefits in the stalled range. The stick forces are of such great importance to the pilots in judging the relative merits of different control systems in which the change of rolling action is of relatively small magnitude that the greater rolling action expected from the tunnel tests (reference 1) for the short wide ailerons was not apparent in the flight tests. Evidently the procedure of flight testing various control systems regardless of the stick forces and later balancing the ailerons to obtain the desired stick forces is not feasible. In the future the relation of stick forces to the rolling and yawing action will have to be considered in the initial wind-tunnel tests. The pilots also preferred the modified to the original differential linkage for the wide-chord ailerons because of the decreased stick forces.

Spoilers.—The spoilers alone, were it not for the lag, would offer a satisfactory single control in both the unstalled and stalled flying range, and it is recommended that means of reducing the lag be further investigated. A possible disadvantage of the spoilers, aside from the lag, appears to be their large positive yawing moment, because during the roll into abrupt, steeply banked turns the yawing action is sufficient to lower the nose of the airplane well below the desired flight path unless a considerable amount of rudder control is used simultaneously away from the direction of the turn. An absolute evaluation of the importance of this item could not be made on account of the lag, but it is very probable that the large positive yawing moment may prove detrimental. The yawing moment can be considerably reduced, however, by a decrease in spoiler area, the present installations giving more rolling control than is considered desirable.

The spoilers, whether used by themselves or in conjunction with the ailerons, seemed to be the sole type of lateral control device tested that gave any control above the stall, possibly because of their large positive

yawing moments (the tests having shown that the rudder gave a fair amount of control above the stall). No definite conclusion can be drawn concerning this point, however, as it may be possible that ability of the spoilers to give control at high angles of attack depends only on the fact that they have no adverse yawing moments. If this is true, then of course the lag becomes a consideration. The lag beyond the stall was not noticed in the flight tests, but other factors entered the tests that would have prevented the lag from being observed even if present. In this connection, the flight tests showed that control beyond the stall is not in itself sufficient for safe flying at low speeds.

Apparently the stalling of the wing results in such a violent form of instability, not only of the motion of the airplane but of the flow as well, that the condition is by no means comparable with that of longitudinal instability or lateral instability in the normal flying range. Beyond the stall, gustiness of the air may cause one wing to drop violently and the airplane to start into a spin before the pilot has a chance to react. With the spoilers, it was possible to stop and reverse the rotation simply by crossing the stick; it was extremely difficult, however, to stop the rotation when the wings were level and to maintain them level for any length of time. Attempts at straight flight usually resulted in a series of violent oscillations during any of which considerable altitude might be lost or the direction of flight changed.

Spoilers in combination with ailerons.—The combination of spoilers and ailerons shows the greatest promise of any of the systems tested. The spoilers provided some control at large angles of attack, the ailerons, by their immediate action, eliminating the apparent lag of the spoilers.

Although the specific combinations tested were unsatisfactory for particular reasons, such as high stick forces and overbalance of the rear-hinge spoiler and aileron combination, the independent tests of the two components showed how the difficulties arose and the manner in which they could be treated. As previously discussed, the wide-chord ailerons have no particular advantage over the narrow-chord ailerons and are, moreover, the cause of the high hinge moments. The spoilers could therefore be combined with the narrow-chord ailerons with no great loss in effectiveness and the need for balancing the hinge moments would be eliminated. With retractable spoilers of the type used in the tests, the line of action of the aerodynamic force always passes through the axis of rotation. The only hinge moment for this device is attributable to the weight of the surface and its supporting members, and if the weight could not be held down to a small enough value, mass balances might be used. Experience with the special wing has shown that the mechanism required for operating one-way systems, such as spoilers with their hinge axes at either the front or rear edge, leaves much to be desired. With the retractable spoilers, a two-directional system, in which the spoilers would be flush with the surface when the stick was in neutral and one spoiler would move into the wing as the other moved out, might easily be adapted. A possible disadvantage of the retractable spoilers lies in the fact that the gap needed in the wing surface near or ahead of the maximum ordinate may adversely affect the lift and drag characteristics of the wing. The yawing moment of the combination could be given any practical value, within limits, by varying the size and location of the spoiler surface. In the event that the positive yaw proved not to be necessary for control beyond the stall, the yawing moment could be completely eliminated.

Dihedral.—Increasing the dihedral, as expected, increased the roll due to sideslip; the results obtained with the increased dihedral, in general, showed that this was the only variable of importance. Lateral control systems with negative yawing moments are adversely affected by increasing the dihedral. In the present tests with 9° dihedral it has been seen that the rolling moment resulting from the yaw was sufficient to counteract entirely that of the wide-chord ailerons. Even though the rolling moment of the ailerons was not entirely counterbalanced at 6° and 3° dihedral, increased deflections and consequently increased forces were required for normal maneuvering. With the spoilers for which the yawing moment was positive, the dihedral had considerable effect in reducing the apparent lag. At 9° dihedral the rolling set up through action of the positive yawing moment was apparently sufficient to cover up the lag of the spoilers. This statement seems to be a contradiction of the fact that with the saw-toothed spoiler, lag was recorded with instruments at 9° dihedral. A possible explanation is that the lag in the rolling action may depend directly on the drag caused by the spoiler—and the plain spoiler had considerably more drag than the saw-tooth spoiler. Thus, the saw-tooth spoiler may cause considerably less yawing than the plain spoiler and have greater lag in its rolling action, so that at 9° dihedral, the saw-tooth spoiler could still have shown some apparent lag, whereas the plain spoilers showed none. The rolling due to the rudder was so greatly increased by the dihedral that at 9° dihedral steady stalled flight was more nearly maintained with use of the rudder than with any of the lateral controls.

The fact that the airplane exhibited spiral instability with 0° dihedral showed that the fin area was too large for the dihedral. As the ratio of dihedral to fin area was increased, the airplane became laterally stable. The optimum dihedral angle tested was 6°. With 9°, the dihedral was too large for the fin area (rudder free) and instability was again present. In this condition the airplane turned out of the sideslip,

maintaining its initial yaw, and spiraled with increasing speed in the opposite direction.

The ability to sideslip is important in a conventional airplane with a small range of gliding angles and a poor field of view ahead and down, as it permits the pilot to obtain a better view of the landing field before the start of or during the landing glide. Dihedral decreases the ability to sideslip. The rolling due to yaw, with dihedral angles above 6°, was sufficient to preclude the practical use of sideslipping as a maneuver. Evidently, the ability to sideslip and maintenance of lateral stability involve opposite considerations concerning the dihedral and some compromise must be made regarding them. As lateral stability is probably more important than the ability to sideslip, the optimum dihedral angle for this airplane with the special wing, considering both features, is probably of the order of 5°—an angle that will give a fair amount of lateral stability and still will permit a limited amount of deliberate sideslipping.

Two-control operation of the airplane.—The two-control operation of the airplane—with proper lateral stability and lateral control characteristics—offers several distinct advantages, the principal and underlying one being the greater simplicity of coordinating two controls instead of the present three. With only a single control for the rolling and yawing motions, which always occur together, the present difficulty of coordinating the rudder and ailerons in blind flight would be eliminated. It would seem, also, that further difficulties such as that of maintaining the proper angle of attack while maneuvering in a wind close to the ground and that, encountered by students, of learning to coordinate the three controls, might be reduced, if not entirely eliminated.

The present tests threw some light on the feasibility of two-control operation of the airplane. The tests showed that the rudder and elevators can be used satisfactorily without the ailerons when the wing has a fair amount of dihedral. At small dihedral angles (for example, 0°) the roll due to rudder action is too small as compared to the directional effect. Turns made with the rudder and elevator are accompanied by an appreciable amount of skidding at the start and sideslipping on recovery to straight flight. Also, if the rudder were operated abruptly the course would be changed considerably before much rolling took place. Control with the standard wing with ½° dihedral was satisfactory, but the skidding and sideslipping in turns was still present, particularly in abrupt turns. With 3° and 6° dihedral, the roll due to the rudder was greater but at 6° the nose tended to drop in sharp turns and a heavy elevator force was required. With 9° dihedral, the rudder became an extremely sensitive rolling control, and required more or less delicate manipulation. Beyond the stall within the range of angles of attack attained, the rudder gave a fair amount of control with the higher dihedral angles.

The elevator and aileron combination gave better control at the smaller dihedral angles than did elevator and rudder. An increase of dihedral necessitated greater stick forces for the ailerons having a substantial amount of adverse yaw; turns became more difficult and, at the highest dihedral, impracticable. Large positive yaw, on the other hand, caused the nose to drop during the entry into turns.

Apparently, a moderately satisfactory two-control system could be developed using the elevator in combination with either the rudder or the ailerons. Both systems have their limitations. The rudder requires a fairly large amount of dihedral, whereas the ailerons work better with a small amount of dihedral. It is still questionable as to whether the aileron-elevator or the rudder-elevator system is best to use. The aileron-elevator combination would give roll as the primary motion, with the directional control as secondary. The ailerons would be useful for raising a wing dropped in gusty air during an approach to landing without turning the airplane out of the wind. The rudder-elevator combination gives yaw as the primary motion and would be useful for correcting the course on a cross-country flight without going through considerable maneuvers.

Several disadvantages of the two-control system were noted during the tests. The maneuverability of the airplane was decreased. Under some conditions this would be an advantage, as there would be less danger of putting the airplane in an awkward attitude. On the other hand, great maneuverability and independent control about the three axes may be necessary for landing and taking off in gusty air, particularly if it is necessary to take off or land cross wind.

CONCLUSIONS

1. The wide-chord ailerons offer no advantage over narrow-chord ailerons where structural considerations will permit the installation of either type.

2. Spoilers situated on the forward portion of the wing give unsatisfactory control because of a lag between the movement of the control surface and the response of the airplane in roll.

3. Provided that the lag can be eliminated, these spoilers offer a very promising means of obtaining control both below and above the stall. The possibilities of eliminating the lag should be investigated.

4. A satisfactory lateral control system effective throughout the whole flight range of angles of attack can probably be developed, utilizing retractable spoilers in conjunction with narrow-chord ailerons.

5. With small dihedral angles, adverse aileron yawing moments of fair magnitude offer no difficulty in the operation of the airplane in the normal flight range, but at angles of attack above the stall, they seriously interfere with the possibility of obtaining lateral control.

6. The importance of the negative yawing moments increases with increasing dihedral. A dihedral angle may be easily attained at which the yawing moment caused by ailerons may induce a rolling moment due to the dihedral sufficient to completely counterbalance that of the ailerons.

7. Large positive yawing moments may be as undesirable as negative yawing moments at angles of attack below the stall with low dihedral, as they result in depressing the nose of the airplane during the entry into steeply banked turns.

8. The operation of an airplane with two controls instead of the usual three is feasible with either the elevator-aileron combination or the elevator-rudder combination but limits the maneuverability of the airplane. Two-control operation may be desirable for certain types of aircraft but further tests are necessary to investigate its effectiveness under conditions requiring that the airplane be landed cross wind in gusty air.

Langley Memorial Aeronautical Laboratory,
National Advisory Committee for Aeronautics,
Langley Field, Va., *May 19, 1934.*

REFERENCES

1. Wind-Tunnel Research Comparing Lateral Control Devices, Particularly at High Angles of Attack.
   I. Ordinary Ailerons on Rectangular Wings, by Fred E. Weick and Carl J. Wenzinger. T.R. No. 419, N.A.C.A., 1932.
   II. Slotted Ailerons and Frise Ailerons, by Fred E. Weick and Richard W. Noyes. T.R. No. 422, N.A.C.A., 1932.
   III. Ordinary Ailerons Rigged up 10° When Neutral, by Fred E. Weick and Carl J. Wenzinger. T.R. No. 423, N.A.C.A., 1932.
   IV. Floating Tip Ailerons on Rectangular Wings, by Fred E. Weick and Thomas A. Harris. T R. No. 424, N.A.C.A., 1932.
   V. Spoilers and Ailerons on Rectangular Wings, by Fred E. Weick and Joseph A. Shortal. T.R. No. 439, N.A.C.A., 1932.
   VI. Skewed Ailerons on Rectangular Wings, by Fred E. Weick and Thomas A. Harris. T.R. No. 444, N.A.C.A., 1932.
   VII. Handley Page Tip and Full-Span Slots with Ailerons and Spoilers, by Fred E. Weick and Carl J. Wenzinger. T.N. No. 443, N.A.C.A., 1933.
   VIII. Straight and Skewed Ailerons on Wings with Rounded Tips, by Fred E. Weick and Joseph A. Shortal. T.N. No. 445, N.A.C.A., 1933.
   IX. Tapered Wings with Ordinary Ailerons, by Fred E. Weick and Carl J. Wenzinger. T.N. No. 449, N.A.C.A., 1933.
   X. Various Control Devices on a Wing with a Fixed Auxiliary Airfoil, by Fred E. Weick and Richard W. Noyes. T.N. No. 451, N.A.C.A., 1933.
   XI. Various Floating Tip Ailerons on Both Rectangular and Tapered Wings, by Fred E. Weick and Thomas A Harris. T.N. No. 458, N.A.C.A., 1933.