REPORT No. 498

IMPROVED AIRPLANE WINDSHIELDS TO PROVIDE VISION IN STORMY WEATHER

By William C. Clay

SUMMARY

The results of an investigation made in the N.A.C.A. 7- by 10-foot wind tunnel to determine possible improvements in the design of airplane windshields, particularly with respect to the pilot's vision from the cabin in stormy weather, are reported.

It was found practicable to design openings in airplane windshields that will permit some unobstructed view from the cabin and yet shield the pilot from wind and rain.

Openings up to 2 inches in width across a flat front panel in vertical or sloping windshields will permit a view directly forward without direct raindrops entering the opening if a small deflecting airfoil is mounted ahead of the windshield. A slight increase of the fuselage static pressure is necessary to keep wind and indirect water drops from entering this style of opening.

It was found possible to design a V-front windshield that utilizes raindrop deflection through small angles to provide vision through open windows on either side of the cabin. Adequate vision can be obtained within normal limits of head movement for nearly the entire forward hemisphere without any appreciable amount of rain or wind entering the cabin, even under atmospheric conditions favorable to ice formation.

Improvements made in the design of several windshield types are described and information given on the air flow about each arrangement.

INTRODUCTION

A study of the characteristics of any windshield arrangement should be concerned primarily with the view from the pilot's cabin. That the need for increased vision in a forward direction, especially in stormy weather, is urgently felt by pilots themselves is clearly shown in reference 1, which points out that the problem has been unsatisfactorily dealt with in practically all existing types of commercial airplanes. This problem has also received recent attention from aircraft manufacturers, who realize its importance in the maintenance of established flight schedules and the safety of personnel and equipment.

An effort is now being made by the N.A.C.A. to measure and evaluate the field of view from the cockpit, as affected by the structure, of a number of existing airplanes. Vision directly ahead is most important for level flight, and an unobstructed field of view about 20° toward each side and 20° downward includes the areas most useful in making landings. An unobstructed view in these areas should be available to the pilot at all times, particularly in bad weather. Many present-day designs fail to fulfill this primary requirement; the view factor has obviously been neglected in favor of other features and the windshield can accomplish little more than to protect the pilot from a direct blast of air.

Windshield design is particularly important in connection with those types of airplanes that offer a minimum amount of structure ahead of the pilot; e.g., pushers, twin-engine tractors, and some single-engine tractors. Many of these types at present afford good vision in clear weather, but in stormy weather when mist, rain, or ice collects on an otherwise satisfactory windshield, the surface becomes translucent and the vision is reduced practically to zero. Even a small deposit of dirt on the windshield is sufficient to prevent vision when the airplane is flying toward the glare of the sun or that of a lighted beacon. Opening a window under these circumstances affords at best a less-than-normal field of view and, owing to the wind and rain which usually drive into the cabin, the pilot cannot derive the full benefit from the window.

Windshield wipers, liquid applications, and other mechanical arrangements have proved to be of slight value in keeping the glazed panels clear. It would seem, then, that to be satisfactory, an airplane windshield should *give an adequate field of view entirely unobstructed by glass and yet not permit wind or rain to enter the cabin.*

The principal factors to be considered in the design of a satisfactory airplane windshield are as follows: Vision must be provided in all important areas in the available field of view; provision should be made for opening a portion of the windshield to provide adequate view in stormy weather; the ease and comfort of the pilot in making use of the available vision should be considered; and finally, the drag of the windshield should be kept at a minimum. Owing to the variety of design in present-day aircraft, no existing arrangement could well be considered as representative for

study; hence a number of conventional types were tested under full-scale conditions and systematic changes were made to improve the vision that could be obtained in stormy weather from each one. As no general information applicable to the subject was available, a detailed study was made of the flow of air and rain about each windshield arrangement. Such studies assisted markedly in the ultimate design of a special windshield that promises exceptionally good characteristics.

These wind-tunnel studies were conducted by the National Advisory Committee for Aeronautics, at Langley Field, Va.

THE EFFECT OF AIR FLOW ON RAINDROPS

Raindrops.—A study of raindrops and the manner in which they strike the windshield aids in the development of a design for a suitable opening. The speed of the airplane, the size and rate of fall of the raindrops, the interference effects of the airplane structure ahead of the windshield, and the general form of the windshield proper all affect the performance of the windshield opening.

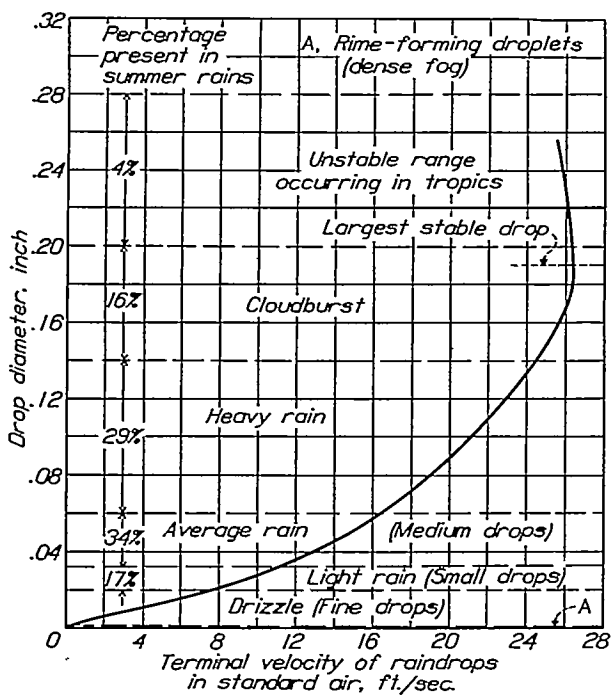

FIGURE 1.—Raindrop velocity chart.

The drops entering any opening may be classified into three types: (1) Drops that are headed for and that enter the opening directly at high velocity (termed "direct drops"); (2) drops that first impinge on the windshield and are then carried into the opening at a low velocity by air flow (termed "indirect drops"); and (3) drops that strike the edges of the opening and splash inward (termed "splash drops"). Any successful windshield opening must include provisions for eliminating each of these types.

The chart in figure 1 was constructed from a compilation of meteorological data on the frequency, size, and rate of fall of raindrops (references 2, 3, and 4). The drop diameter is plotted against its terminal velocity in standard air. The diameter varies from zero to about one-quarter of an inch and is divided into several more or less definite grades with frequency in average summer storms indicated at the left.

The terminal velocity of the drops increases with the diameter up to 0.18 inch after which the velocity decreases. Friction of the air causes a deformation of large drops which become flattened and present increased resistance to the air. (See reference 2.) The deformation becomes appreciable when the diameter is about 0.16 inch and increases rapidly as the drop grows larger. A further increase in size causes the drop to become very unstable and it soon breaks up into a number of smaller drops, which, of course, fall more slowly.

In summer and in tropical climates there is a greater percentage of large drops in the precipitation than in winter and in colder regions. Even in the average summer storm, however, only 20 percent of the drops have a diameter greater than 0.14 inch, while 51 percent have a diameter less than 0.06 inch. In the average steady winter rain, drop diameters greater than 0.1 inch are rare; the majority of them occur in the portion designated on the chart "light rain", having a diameter less than 0.032 inch. For purposes of general calculations in this report, a drop diameter of 0.06 inch is assumed to be representative of average conditions. From the chart, this drop has a terminal velocity of 16.4 feet per second.

Computation of resultant path.—The resultant path of raindrops with respect to horizontal flight, neglecting interference effects, can be computed by aid of figure 1 and the formula:

$$\alpha = \tan^{-1}\frac{V_T}{V_A}$$

where α, resultant path angle above the horizontal.
V_T, terminal velocity of the raindrop.
V_A, airplane velocity.

Assuming an airplane velocity of 188 feet per second and a raindrop having a diameter of 0.06 inch, the path of the approaching drop above the horizontal can be found, for

$$\alpha = \tan^{-1}\frac{16.4}{188} = 5°$$

Computation of air deflection.—It is also possible to estimate the feasibility of utilizing air deflection ahead of a windshield for deflecting raindrops sufficiently to prevent their entrance into an opening. To that end, a formula for raindrop resistance is needed.

The resistance of small spheres in a moving fluid is somewhat complex. For Reynolds Numbers (VD/ν)

above 500 the coefficient of resistance varies but little, however, and provided that the raindrop does not deform, it may be assumed that

$$R = C_D \frac{\rho}{2} A\, V^2 = K\, V^2$$

where R is the resistance of the drop.
C_D, the coefficient of resistance.
ρ, fluid density.
A, cross-sectional area.
V, relative velocity of drop and fluid.

The value of K for each drop size may be determined from the terminal-velocity chart and is equal to w/V_T^2, where w is the weight of the drop.

Now consider a raindrop at rest with respect to a sudden deflecting stream of air, as would be the case of an airplane flying into rain and equipped with a deflecting arrangement ahead of the windshield.

Let V_F be the velocity of the deflecting stream of air.
V_D, the velocity of the drop at any time t.
S, the distance traversed by the drop at end of time t.

Then neglecting gravitational acceleration, for a differential time dt we have

$\frac{dV_D}{dt} = \frac{K}{M}(V_F - V_D)^2$ where M is the mass of the drop. By integration, and assuming V_F constant,

$$\frac{1}{V_F - V_D} = \frac{K}{M} t + C \text{ where } C = \frac{1}{V_F}$$

whence

$$V_D = \frac{V_F^2 \frac{K}{M} t}{V_F \frac{K}{M} t + 1}$$

solving for S we have

$$S = \int_0^t V_D\, dt = V_F \int_0^t \left[1 - \frac{1}{V_F \frac{K}{M}\left(t + \frac{1}{V_F \frac{K}{M}}\right)} \right] dt$$

By integration

$$S = V_F \left[t - \frac{1}{V_F \frac{K}{M}} \ln\left(V_F \frac{K}{M} t + 1 \right) \right]$$

substituting $\frac{K}{M} = \frac{32.2}{V_T^2}$

$$S = V_F \left[t - \frac{V_T^2}{32.2\, V_F} \ln\left(\frac{32.2\, V_F\, t}{V_T^2} + 1 \right) \right]$$

A practical example will illustrate the use of this method. Assuming that it were possible to design a deflection method giving a 90° cross stream of air in front of the windshield, a foot in depth, and equal to the velocity of the airplane, the time t for the drop to traverse the cross stream would be approximately equal to $1/V_F$. If a drop diameter of 0.06 inch with a terminal velocity of 16.4 feet per second is assumed, by substitution the deflection will be

$$S = 1 - \frac{(16.4)^2}{32.2} \ln\left(\frac{32.2}{(16.4)^2} + 1 \right)$$

or

$$S = 0.0555 \text{ foot} = 0.66 \text{ inch}$$

Thus, even with such extreme air deflection, the front shield could have a forward-projected opening of only 0.66 inch. Such a small opening obviously would increase the vision but slightly.

APPARATUS AND METHODS

Test apparatus.—For purposes of wind-tunnel investigation, a plywood-covered model fuselage was built that would be adaptable for various windshield constructions. The size of the fuselage and general arrangement of the windshield are shown in figure 2.

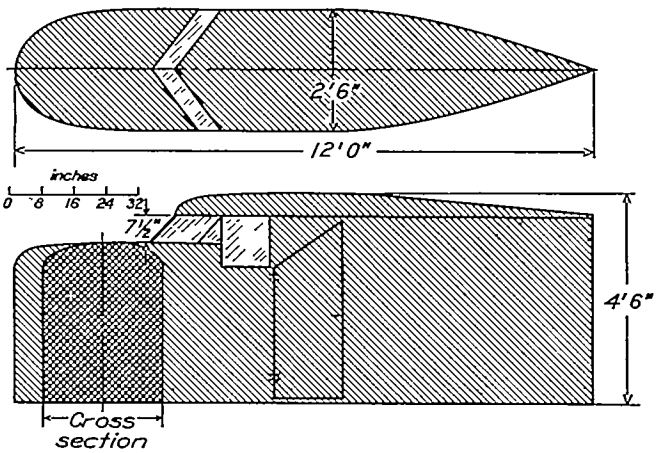

FIGURE 2.—Fuselage 1.

The cockpit of the fuselage was sufficiently large to accommodate an observer. The fuselage was mounted in the N.A.C.A. 7- by 10-foot open-throat wind tunnel (reference 5) with the fuselage base at the bottom of the tunnel throat. This arrangement placed the windshield approximately at the center of the air stream.

Rain conditions were simulated by a water-spraying jet mounted about 10 feet ahead of the windshield. This jet provided a spray of water from a point source and was adjustable to give drops of any desired size ranging from fine fog particles to drops about 0.12 inch in diameter. The location of the spray source could be shifted at will by controls inside the fuselage, and in this way the complete path of the drops from any source with respect to the windshield could be observed. A small portable hand spray was also used in cases where a more detailed observation was desirable.

A velocity meter of special design was employed to obtain the speed and direction of the air flow about the fuselage and windshield. A diagram of the construction of this instrument is given in figure 3. With the tube held in the air stream as shown in the sketch, the small

orifice in the side of the tube provides a maximum positive pressure of approximately $P_1=\rho V^2/2+$ static pressure, while the end orifice provides a maximum negative pressure of approximately $P_2=-1.6\,(\rho V^2/2)+$ static pressure, giving a total maximum velocity head of approximately $h=2.6\ (\rho V^2/2)$ between the two orifices. The tube was mounted on a device that permitted the orifices to be held in any position with respect to the fuselage, and by turning and twisting the instrument until a maximum reading was obtained, the velocity vectors of the air flow at the location of the orifices were determined. This instrument has two advantages over an ordinary pitot tube. The measurable velocity head is more than twice as great and the proximity of the two openings affords greater accuracy when the velocity gradient is extreme. The

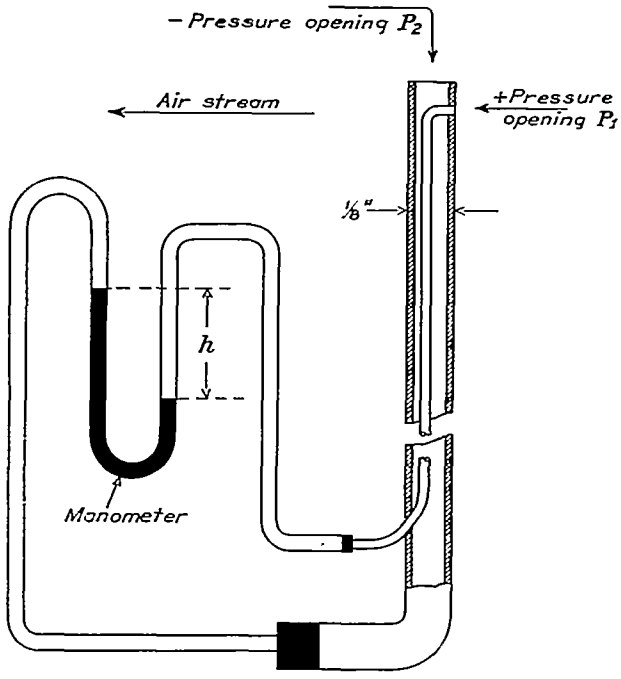

FIGURE 3.—Instrument for measuring air flow.

instrument was calibrated in an air stream of known velocity.

The approximate direction of the air flow was determined by a small silk streamer mounted on the end of a fine wire. An adjustable opening was built into the extreme front of the nose of the fuselage to permit regulation of the fuselage static pressure. The term "normal fuselage pressure" as used in this report refers to the static pressure obtained in the fuselage with this adjustable opening in the closed position. Fuselage static pressures were measured by a manometer. All static pressures were referred to base pressures outside the air stream.

The maximum velocity of the wind-tunnel air stream was about 75 miles per hour. All the tests, unless otherwise stated, were made at an air velocity of about 65 miles per hour.

Methods.—Deflection of rain and wind from any windshield opening may be obtained by means of air flow, guide vanes, or both. Deflection by means of air flow may be effected by the shape of the fuselage forward of the windshield, the shape of the windshield itself, or by the forcing of air outward through the windshield opening. Preliminary air-deflection calculations indicated that guide vanes might be necessary for deflecting direct raindrops, while air deflection might be used to eliminate indirect and splash drops, particularly with windshields having frontal openings.

Accordingly, a study was made of the two methods, employing several different windshield types. Each type was tested with various frontal openings designed to give maximum field of view in a forward direction. The data obtained from these tests led to the construction of a special type of windshield designed expressly to give a maximum field of view from a comparatively large open window.

First, a thorough survey was made of the air flow about the fuselage and about each type of windshield in the closed, or normal, position. The speed and direction of the air flow at various points were plotted directly on the sketch and a close observation made of any turbulence or irregularities in the vicinity of the windshield. Observation of the path of a jet of fine fog particles introduced into the air stream from the spray tube ahead of the fuselage, in conjunction with the velocity-vector sketches, afforded a fair analysis of the turbulence, blocking, pressure gradients, and drag of each type of windshield-fuselage combination. In many instances it was found possible to obtain photographs that show this flow.

Further tests included a study of both air flow and rain flow using various windshield openings in connection with a number of special additions or conditions, such as deflecting vanes, gutters, and static-pressure variations. Preliminary tests to determine the most suitable type of deflecting vane included tests on flat plates, strut sections, and symmetrical and cambered airfoils. It was found that an airfoil with a section similar to the Clark Y was most effective and such an airfoil was used throughout this investigation.

A description of the location and size of the openings and the included angles of vision relative to the normal location and movement of the pilot's head will be given under Results. The criterion with respect to the entrance of rain and wind into any of the openings is not a function of the pilot's location, but is given with reference to the entire cabin interior on the basis that no opening is entirely satisfactory if any water enters the cabin. Similarly, no design was considered satisfactory that permitted fluctuating air currents much in excess of 15 miles per hour to blow into the pilot's face, as such currents seriously impair vision.

In this report the "slope" of a windshield is defined with reference to the base of the windshield, i.e., a "rearward-sloping" windshield slopes rearward from its base, and a "forward-sloping" windshield slopes forward from its base.

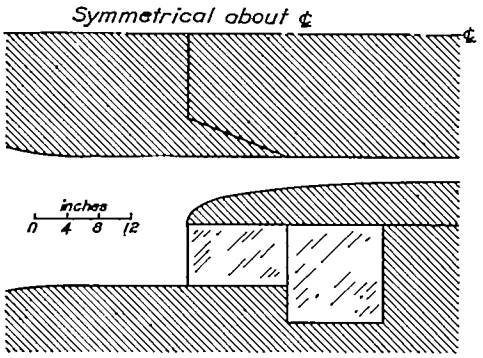

FIGURE 4.—Windshield 1.

RESULTS

WINDSHIELD 1

A sketch of the first type of windshield tested is given in figure 4. This type was chosen as representative of vertical, flat-front windshields of ordinary dimensions. The front window was 7½ inches high and 21 inches wide. Two other forward vertical windows were built at an angle and intersected the front window as shown.

Figure 5 is a diagram of the air flow over the fuselage and this windshield with all windows closed. The average velocity of the air stream, assumed to be represented by that indicated at a point about 3 feet above the front of the fuselage, was in this case about 65 miles per hour.

The turbulent area immediately in front of the windshield is of particular interest. The dashed line on the figure represents the locus of a series of point vortices; hence it is the line of stagnation or zero velocity. The flow of air under the dotted line is completely disturbed and follows the general path as shown. The strength of this vortex is extreme, even exceeding the intensity of the local air stream at certain points. Most of the turbulent air leaves the surface of the fuselage below the windshield in the direction indicated by arrows. Hence, the air flow along the side front window is apparently little affected by the forward vortex but is fairly uniform and flows steadily in a rearward direction except for comparatively small disturbances at the forward edge.

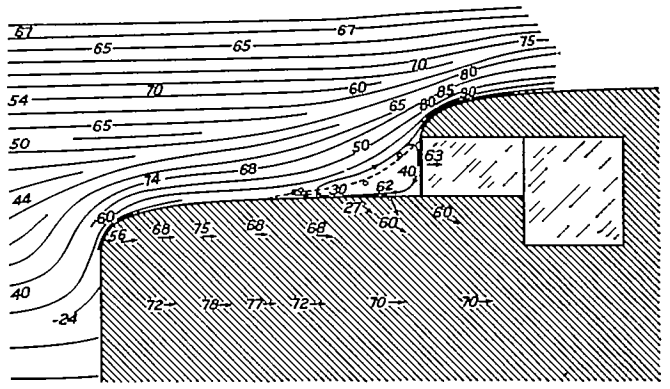

FIGURE 5.—Air-flow speed and direction with windshield 1 and fuselage 1. Lines indicate direction and numbers indicate speed in miles per hour in a section along center line, except for arrowed points which were taken 1 inch from the fuselage surface. Speed of air stream, 65 miles per hour.

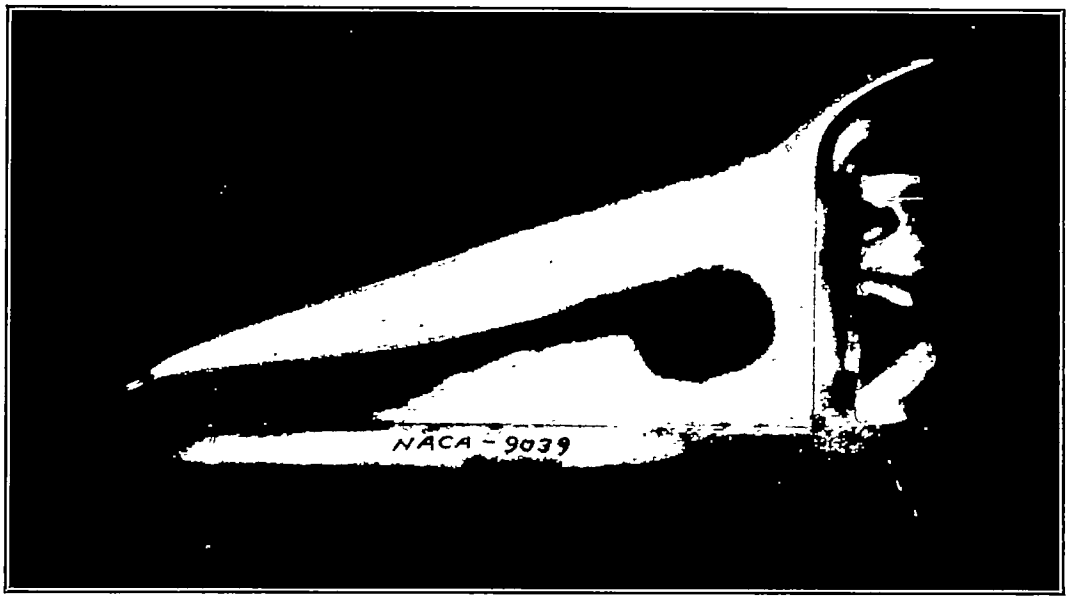

FIGURE 6.—Air flow over fuselage in front of windshield 1. Speed of air stream, 65 miles per hour. Note turbulence at lower front of windshield

The air flow in front of this windshield is very poor aerodynamically and indicates that the arrangement offers considerable blocking effect with a consequent high drag.

Figure 6 is a photograph of a stream of fog ejected into the air stream from the hand spray several feet

ahead of this windshield which further illustrates the turbulent area in front of the windshield.

Observation of the flow of raindrops in the air stream revealed that the path of the drops was little affected by the turbulence in front of the windshield, which corroborates previous deflection calculations. The general path of the air stream above the fuselage was upward, whereas the path of raindrops is normally downward. The path of the drops above the fuselage was, however, affected to some extent by the upward flow of air depending on the drop size. Drops greater then 0.06 inch in diameter continued to maintain a slightly downward path; drops of somewhat smaller diameter tended to rise with the air stream. Extremely small drops, of course, followed the air stream very closely. All raindrops impinging on the front of this windshield followed the local air currents and traveled downward.

Apparently the only practicable opening in a front window of this type would be one not less than 1½ inches in width that extended across the window. Such an opening was made in the front window just above the horizontal center line and, as expected, both rain

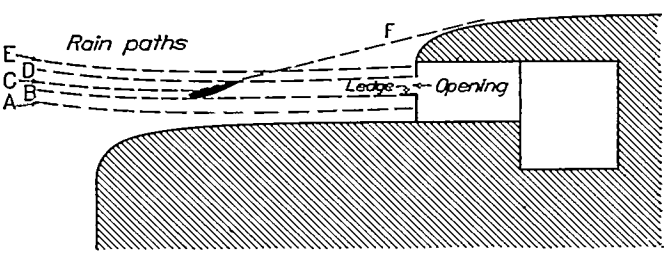

FIGURE 7.—Diagram of frontal opening arrangement for increasing vision with windshield 1, showing paths of rain flow with deflecting airfoil inverted.

and wind entered the cabin regardless of the strong downward flow of air outside the opening. In fact, the direct drops entered with such velocity that they traversed the entire length of the fuselage. The air blew into the opening in gusts of fairly low velocity, about 15 miles per hour, and forced inward the indirect and splash drops that impinged on the glass near the opening. Increasing the static pressure in the fuselage to about $\rho V^2/2$ by means of the opening in the front of the fuselage caused air to leave through the windshield opening about 15 miles per hour. This air prevented most of the indirect and splash drops from entering but had a negligible effect on the direct drops. Various gutters and ledges placed about the opening failed to improve this condition.

The failure of simple air-deflection methods indicated that direct raindrops might best be eliminated by direct guide-vane deflection. The field of view desired from this type of windshield opening is primarily straight ahead, which unfortunately is directly in the relative path of the raindrops. Hence, any direct deflection vane would have to be several feet ahead of the opening to prevent excessive interference with the field of view and should be so shaped and located as to assist rather than obstruct the flow lines of the general air stream. To this end, an airfoil having a chord of 6 inches and sufficient span to protect the entire length of the windshield opening was mounted on the fuselage about 2 feet ahead of the windshield. A diagram of the best arrangement found with this combination is given in figure 7.

The inverted airfoil in combination with a 2-inch ledge along the lower edge of the windshield opening prevented about 95 percent of the drops from entering this opening. The airfoil itself intercepted and deflected nearly all the direct drops that were in line with the opening but it increased the tubulence in front of the windshield to the extent that it was necessary to employ the ledge to block the turbulence and intercept the scattering drops at the edges of the opening. The width of the opening could be increased to 2 inches with this combination. The increased turbulence reduced the velocity pressure in front of the windshield sufficiently to increase the outward flow of air from the opening to 40 miles per hour with a fuselage static

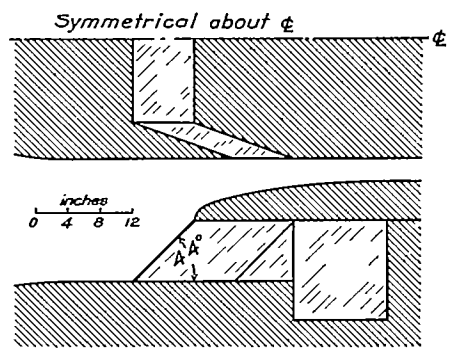

FIGURE 8.—Windshield 2A.

pressure of about $\rho V^2/2$. This outward velocity prevented all the indirect and splash drops from entering. In the figure, C represents the path of the direct drops in line with the opening, which are deflected by the airfoil along a path F above the windshield. The drops along paths D and B strike above and below the opening, respectively, and do not enter the cabin. Varying the size of the raindrop required a small change in the vertical location of the airfoil.

A vertical field of view of about 10° was available in a forward direction, with the eyes of the pilot located 12 inches from this windshield opening. Allowing a 4-inch vertical movement of the pilot's head, the total vertical field of view available was about 28°. Of this, about 4° was blanketed by the airfoil itself. The horizontal field of view, which depends on the width of the window, was in this case about 100°.

WINDSHIELD 2A

Windshield 2A (fig. 8) was constructed as representative of a rearward-sloping, flat-front windshield of ordinary dimensions. The front window had a rearward slope of 136°, a vertical projected height of 7½ inches, and a width of 21 inches. Two sloping side windows

were set at an angle with respect to the front window as shown.

Figure 9 is a diagram of the air flow in front of windshield 2A with all windows closed, and shows a noticeable improvement of the flow compared with windshield 1. Turbulence exists only in front of the lower half of the windshield and the velocity of the air in turbulent areas is much less. The air flow along the side front windows is fairly uniform and flows in a slightly upward direction with the exception of small turbulent areas at the line of intersection with the front window.

In order to enable a study of various frontal openings with this windshield, the front window was split horizontally and the upper and lower sections hinged at the top and bottom, respectively. Thus it was possible to test any combination of angles of the two sections and, by altering the width of the two panels,

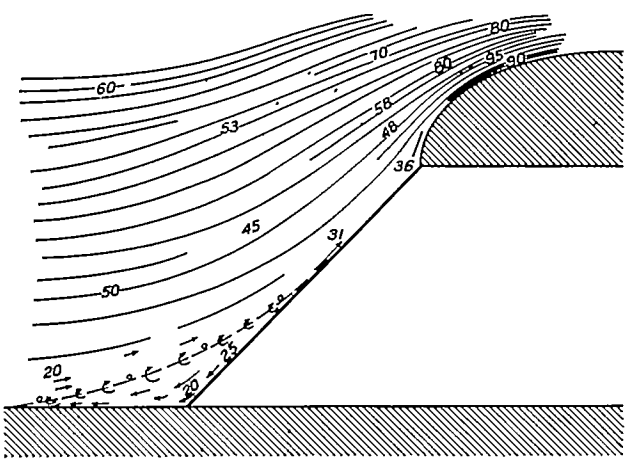

FIGURE 9.—Air-flow speed and direction with windshield 2A. Lines indicate direction and numbers indicate speed in miles per hour in a section along the center line. Speed of air stream, 65 miles per hour.

both the size and location of the opening could be varied.

Preliminary tests employing a variety of these combinations regardless of visibility considerations were made primarily to study local variations in the air flow and rain flow about the opening with variations in internal fuselage pressures.

No arrangement tested with normal fuselage pressure prevented indirect or splash drops from entering the opening. No indirect or splash drops entered any opening under 2½ inches wide with the fuselage pressure raised approximately $\rho V^2/2$. Direct rain drops entered all openings that provided a forward projected vision greater than one quarter of an inch, regardless of fuselage pressure.

These results indicated that as with windshield 1 any forward opening in this type of windshield will require the employment of a deflecting vane to prevent direct raindrops from entering. Furthermore, the internal fuselage pressure must be greater than normal and must provide a sufficient flow of air outward through the opening to prevent the entrance of indirect and splash drops.

Tests were accordingly made with a Clark Y airfoil in various positions as a deflecting vane. The air flow with the airfoil in the best location in both the inverted and upright positions is shown in figures 10 (a) and 10 (b), respectively. From tests with the spray, it was found that, in general, the greater the angle of attack of the airfoil with respect to the rain paths, within limits, the wider will be the rain-free path to the windshield and the greater may be the windshield opening. If the angle of attack of the airfoil with respect to the air flow is, however, increased to the burble point, water will collect on the curved surface of the airfoil in large drops and blow off into the open-

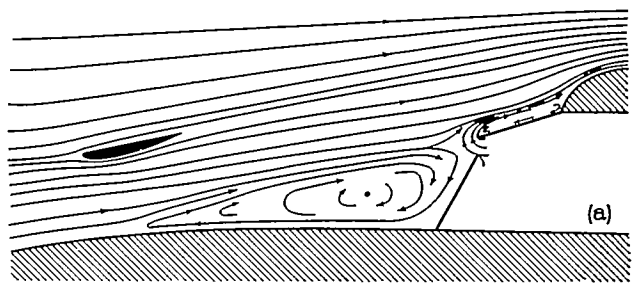

(a) Airfoil inverted.

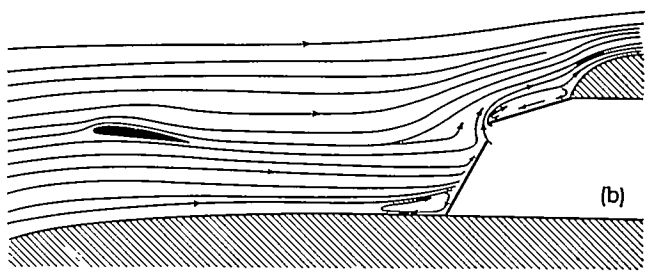

(b) Airfoil upright.

FIGURE 10.—Diagram of air flow in front of windshield 2A. Speed of air stream, 65 miles per hour.

ing. With this particular combination of windshield and fuselage the general air flow was upward and, as the relative direction of the rain was nearly horizontal, the airfoil angle could be increased to intercept more rain without burbling when the airfoil was mounted in the inverted rather than in the upright position. On certain fuselages where the flow of air in front of the windshield is initially horizontal, an airfoil mounted in the erect position may deflect direct drops efficiently, and actually reduce the turbulence in front of the windshield as may be seen by comparing the turbulence shown in figures 10 (a) and 10 (b).

The best fore-and-aft location of the airfoil either erect or inverted was found to be between 2 and 3 feet ahead of the windshield. When placed more than 3 feet ahead the rain-free path ceased to remain uniform and direct drops entered the opening. When placed closer than 2 feet, the airfoil blanked off too much of the field of view.

The best vertical location of the airfoil depends upon the relative paths of the raindrops with respect to the fuselage, which varies with the size of the raindrops and with the angle of attack and flight path of the fuselage. In practice the airfoil height might be made adjustable from the cabin to allow for changes in position.

The addition of an outer ledge to the lower edge of the windshield similar to that used on windshield 1 (fig. 7) was tested also. In general, this ledge exerted a spoiler action on the strong vortex between the air-

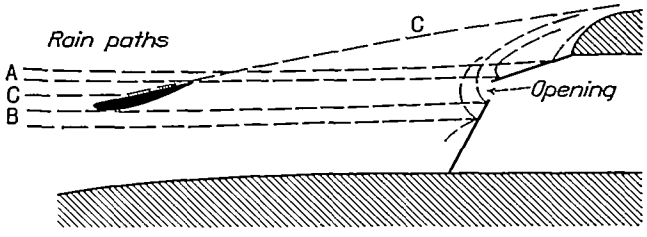

FIGURE 11.—Diagram of frontal opening arrangement for increasing vision with windshield 2A, showing paths of rain flow with deflecting airfoil inverted.

foil and the rear part of the windshield and exerted a less disturbing effect on the lower band of raindrops which, in conjunction with its action as a secondary deflector, usually made it possible for the opening to be increased. With some arrangements of this windshield the use of a ledge was essential to insure that no rain entered the cockpit.

The paths of the rain with the best arrangement of this type of windshield are shown in figure 11. The 6-inch-chord inverted airfoil was mounted about 2 feet ahead of the opening, at the angle and vertical location

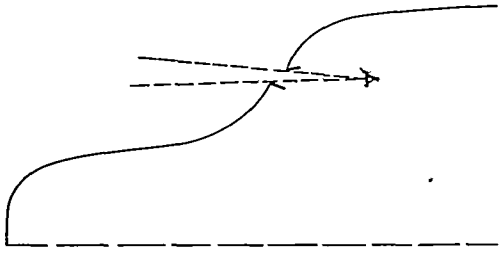

FIGURE 12.—Windshield 2B.

that had been shown best by the preliminary tests. With the airfoil so located and with about $\rho V^2/2$ pressure in the fuselage, no water drops or wind entered any opening up to 1½ inches in width without a ledge or 2 inches with a ledge. In fact, air was forced out of the opening at a speed of about 45 miles per hour. The extent of the rain-free path with the airfoil inverted is the region between parts A and B. All the raindrops in part C that would normally have entered the opening were deflected by the flat surface of the airfoil. This arrangement afforded a field of view from the cabin similar to that obtained from the opening with windshield 1.

WINDSHIELD 2B

In order to test the effectiveness of higher tangential air velocities past an opening, the fuselage and windshield were faired to form an open slot (windshield 2B). Figure 12 shows the most satisfactory slot arrangement tried.

The flow of air over the combination was fairly uniform and free from turbulence. The normal flow of air past the slotted opening was about 55 miles per hour when the speed of the air stream was 65 miles per hour. There was no flow of air into this opening. With a fuselage pressure of about $\rho V^2/2$, the speed of the air that flowed outward through the slot was about 45 miles per hour.

Tests with the spray showed this arrangement to be unsatisfactory, as might have been expected from previous air-deflection calculations. The strong outward flow of air through the opening prevented the entrance of indirect and splash drops, but the direct raindrops passed through the deflected air stream without any noticeable interference.

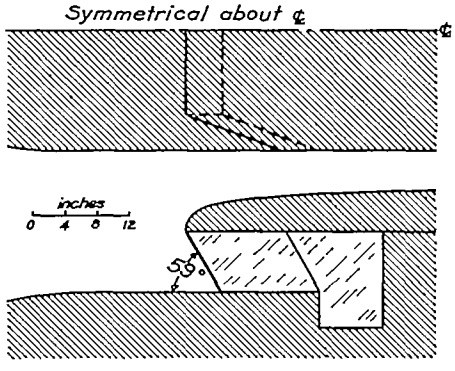

FIGURE 13.—Windshield 3.

The airfoil was then mounted on the forward part of the fuselage in an endeavor to deflect the general air stream so as to increase the tangential air speed past the opening. In every case, however, the air speed past the slot was reduced thereby and, as with previous windshields, it was only when the airfoil was set in a position to intercept the direct raindrops that no water entered the cabin.

WINDSHIELD 3

Windshield 3 (fig. 13) was chosen as representative of forward-sloping flat-front windshields of ordinary dimensions. The front window was 21 inches wide and sloped forward from its base at an angle of 59° with the horizontal; its vertical projected height was 7½ inches. Two sloping side windows intersected the front window as shown.

Figure 14 is a diagram of the air flow in front of this windshield with all windows closed. The turbulence is extreme, including in effect a vortical disturbance within the entire area in front of the windshield that

connotes a considerable blocking effect and a consequent high drag.

With this arrangement also, the path of the raindrops was but little affected by the turbulent areas and the larger drops impinged directly on the windshield in a very nearly horizontal path.

The best arrangement found for a forward opening with this combination is shown in figure 15. A

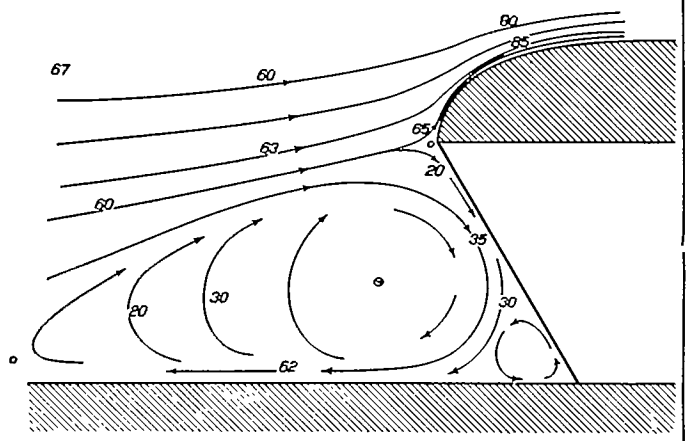

FIGURE 14.—Air-flow speed and direction with windshield 3. Lines indicate direction and numbers indicate speed in miles per hour of air flow in a section along the center line. Speed of air stream, 65 miles per hour.

section of the front window well above the center line and 2¼ inches wide was swung outward and fixed to form a ledge along the upper edge of the opening. The airfoil was then located about 30 inches ahead of the windshield opening in the inverted position and the static pressure in the fuselage was raised to about $\rho V^2/2$.

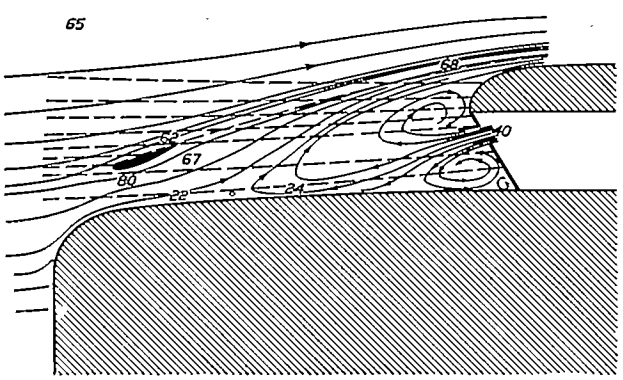

FIGURE 15.—Diagram of frontal opening arrangement with inverted airfoil. Windshield 3. Dotted lines represent paths of rain flow. Continuous lines represent paths of air flow. Numbers indicate air-flow speed in miles per hour. Speed of air stream, 65 miles per hour.

No raindrops or wind entered this opening, with the combination arranged as illustrated. Even though the normal flow characteristics about this type of windshield are somewhat similar to those found with windshields 1 and 2A, the arrangement of the parts for efficient action of this opening was different. The airfoil was not effective when located less than 30 inches from the opening, and the ledge was effective only when placed along the upper edge of the opening.

This particular opening afforded a vertical field of view of about 10° in a forward direction with the eyes of the pilot located 12 inches from the opening. Allowing a 4-inch vertical movement of the pilot's head, a total vertical field of view of about 26° was available.

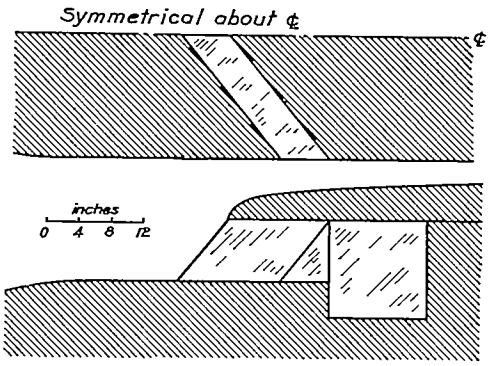

FIGURE 16.—Windshield 4.

WINDSHIELD 4

Windshield 4 (fig. 16) was chosen as representative of rearward, sloping V-front windshields. The vertical projected height of this windshield was 7½ inches, the included angle of the V was 100°, and the front panels sloped backward from the base at an angle of 50° with the horizontal.

The flow of air about this windshield was almost horizontal and was very uniform both in direction and

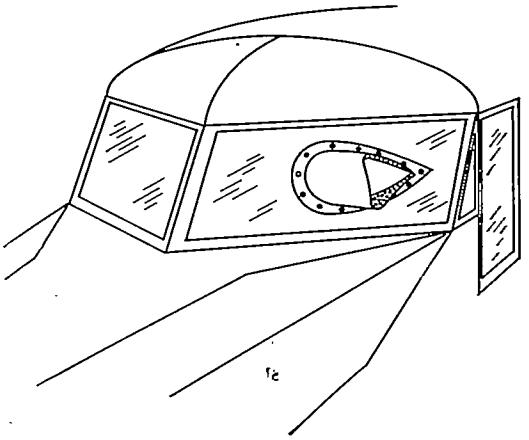

FIGURE 17.—Windshield 4 with opening arrangement for increasing vision.

speed. These features indicate that this type of windshield offers a much lower blocking effect and produces much less resistance to the air stream than any of the previous types. A few small vortices appeared along the lower edge of the windshield, but their velocities were comparatively low. Vortices were also present aft of the side corner posts, but as they would have little effect on any openings in the front window they were not studied in detail.

Neither the style of opening employed with the previous types nor the use of a simple airfoil to deflect

the raindrops is readily adaptable to this type of windshield with its diverging air stream.

The most satisfactory arrangement for preventing the entrance of rain tested on this windshield consisted essentially of a protruding streamlined shield constructed about an opening in the windshield panel (fig. 17). The shield was made of celluloid and formed of a single curved surface with its elements horizontal and approximately perpendicular to the path of the air flow along the window. The front portion of the shield extended sufficiently outward to protect the entire opening from direct raindrops. The velocity of the air stream past this guard reduced the normal static pressure in the cabin but no air flowed through the opening. A small amount of indirect water was carried inward by small vortices about the edges of the guard but this could be eliminated either by increasing the fuselage pressure or by placing a small gutter completely around the outer edge of the guard.

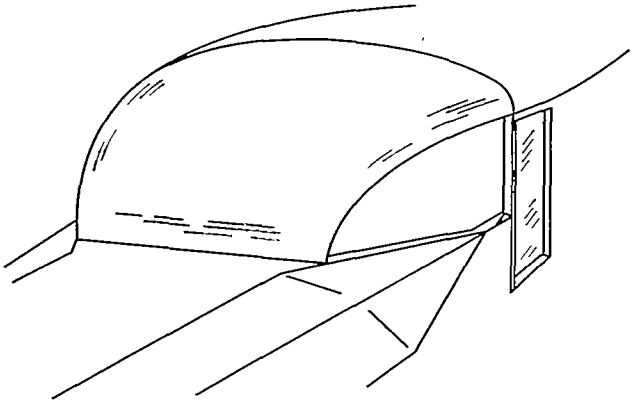

FIGURE 18.—Windshield 5.

The opening was 8½ inches long and had a maximum width of 4 inches. The maximum field of view from this opening included an area about 20° to the left from straight ahead. The field in a more forward direction gradually decreased to zero.

It was found possible to increase the size of this opening, although in so doing it became necessary to increase the fuselage pressure and thus force a flow of air outward through the opening.

The successful performance of this combination indicated the advantage of further study with side windshield openings.

WINDSHIELD 5

Windshield 5 (fig. 18) was accordingly constructed to provide a large open area on either side. The lower front edge of a single celluloid sheet was attached to the fuselage surface forward of the cabin. The sheet was then bent over and fastened to the curved roof at the top of the cabin. The outer side edges were cut inward toward the front so that the front of the shield did not extend entirely across the front of the cabin, thus providing some forward vision when the pilot's head is moved to the side.

The air flow about this shield was very turbulent. In addition to the turbulent area in front, which was similar to that in front of a flat-front windshield, a strong whirl formed in the vicinity of the openings and created strong currents in the cabin.

The shield was fairly effective in preventing the entrance of direct raindrops through the openings. The blocking effect of the fuselage and windshield apparently induced a deflection of the air stream to the side sufficient to deflect the direct drops. The windshield was unsatisfactory, however, as considerable quantities of indirect and splash drops were carried in with much force by the turbulent air currents. It was found impracticable to overcome this difficulty by increasing the static pressure in the fuselage without causing an excessive flow of air through the cabin. Tests made employing various guards, gutters, and

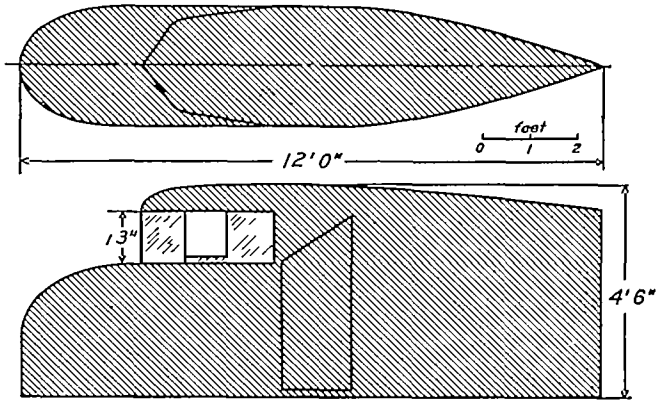

FIGURE 19.—Windshield 6A with fuselage 2.

guide vanes also failed to improve this condition. These tests indicated, however, that the general trend of this design offered a simple and effective way to obtain excellent view characteristics with the elimination of all direct raindrops. Therefore, further studies were made employing various side-opening arrangements that would retain this desirable feature and yet diminish the turbulence nearest to the opening.

WINDSHIELD 6A

A further investigation with various side-opening arrangements necessitated several alterations in the general design. Previous studies of the air flow showed definitely that the formation of vortices and high local-pressure gradients about the windshields was induced and aggravated by the blocking effect of the long and rather blunt nose of the fuselage. It was also apparent that a windshield height of 7½ inches was insufficient to permit proper observation of the air flows in a horizontal plane, owing to large interference effects between the windshield and fuselage. The general design was therefore altered as shown in figure

19. The base of the entire windshield was lowered to increase the panel height to 13 inches, and the forward part of the fuselage was cut away to give a more rounded nose and was faired smoothly into the base of the windshield.

Except for a subsequent minor modification, a vertical V-type windshield was employed, as this shape was found to deflect most of the oncoming air to the sides, thereby reducing the usual high-pressure gradient above the cabin and tending to distribute the flow of air more evenly about the whole windshield. The plan form of this windshield is given in detail in figure 20. The outer side edges of the V were curved inward to reduce local turbulence at the openings, areas of which were located immediately aft of this part on either side. This front shield was not extended completely across the fuselage but was designed to allow for some vision directly forward. A panel at the rear of the opening served to fair the arrangement into the sides of the fuselage.

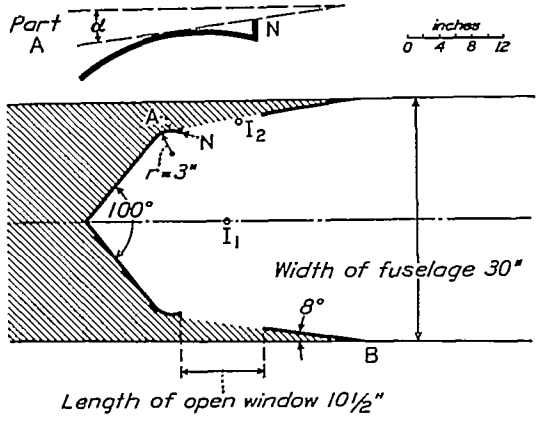

FIGURE 20.—Plan-view details of base of windshields 6A and 6B showing location of points of vision I_1 and I_2. (See charts of field of view, fig. 27.)

A diagram of the air flow about this combination is given in figure 21. The improvement of this flow over those obtained with most of the previous designs is striking. (Cf. fig. 5.) The gradual slope of the nose of the altered fuselage considerably reduced the high pressure gradients over its forward part; this improvement, in combination with the V-shaped windshield, induced a comparatively uniform pressure gradient about the entire windshield, particularly in the vicinity of the opening. The rather pointed V caused, however, a slight instability of the lateral air flow.

WINDSHIELD 6B

In order to correct the instability of the lateral air flow that was found with windshield 6A and to increase the upward and forward vision from the cabin, the sharp V at the front of windshield 6A was supplanted by a small rearward-sloping triangular surface (fig. 22). The base of windshield 6A was not changed by this modification.

The general characteristics of the air flow over this arrangement were essentially the same as with the sharp front V, except for a small difference immediately in front of the windshield which slightly increased the pressure gradient above it. A fog photograph of the air flow with this combination is given in figure 23. The lower stream of fog follows the surface of the fuselage right up to the lower V of the windshield. This stream then divides, passes around both sides, and maintains a nearly horizontal path. The middle stream follows a fairly straight path until it reaches the more abrupt portion of the windshield center; it then divides and follows an even, fan-shaped path around the upper portion. The upper fog stream also follows an even path until it reaches the rather flat upper portion of the shield. At this point it is deflected and passes entirely above the cabin. The arrangement appeared to offer excellent turbulence characteristics and gave promise of fulfilling all the design requirements. A very complete study was

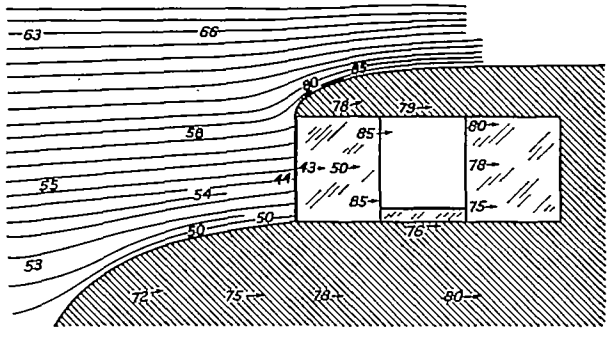

FIGURE 21.—Air-flow speed and direction with windshield 6A. Lines indicate direction and numbers indicate speed in miles per hour of air flow in a section along center line except for arrowed points which were taken 1 inch from the fuselage surface. Speed of air stream, 65 miles per hour.

therefore made of this improved arrangement and a complete discussion is given.

STUDIES OF FINAL DESIGN

The variations studied with this final arrangement included: (1) the effect of variations in the curvature of the windshield at the forward edge of the opening, together with any necessary additions at this point to eliminate raindrops; (2) the limitations in the dimensions of the opening and the best construction and location for the glazed panel at the rear of the opening; (3) the necessary constructions above and below the open window; (4) the effect of fuselage static pressure on the performance of the opening with respect to wind and rain; and (5) the field of view available from the cabin with the best protective arrangement.

One of the most significant observations with this windshield was with respect to the flow of water drops along the surface of the front shield. With the exception of the drops on the upper center, which tended to follow with the air stream above the shield, the

general path of the drops was horizontal and to the rear. The final disposition of these drops as they were carried rearward varied with the design of the curved portion at the forward edge of the opening. When this curve was terminated at the point of tangency with the air stream, the drops were carried swiftly to the edge whence they were blown into the opening by local air currents. If this curve was extended slightly inward, however, past the point of tangency with the air stream, most of the drops did not continue around the curve, but collected at the point of tangency and dropped by gravity to the bottom of the windshield. These drops were quite unstable and a few of them were still blown inward by stray air currents. The addition of a small, flat, projecting ledge placed vertically along the curved inner edge of the shield and normal to the air stream completely corrected this condition and no water that impinged on the front shield entered the opening. (See fig. 20, part N.) The optimum depth of this ledge was from one-fourth to three-eighth inch; it did not project outward sufficiently to interfere with the air flow past the corner nor to be in the path of direct raindrops. This ledge could project slightly beyond the longitudinal parallel, as indicated by the angle α. The radius of curvature of the part A and the extent of its inward curvature were found to vary with the local air flow, which, in turn, was influenced by the shape of the front shield. The exact forward shape was not important, however, so long as it diverted the air stream to the side without introducing turbulence in the region of the curved portion.

The shape and location of the glazed panel at the rear of the opening, together with the fuselage static pressure, had a controlling effect on the action of the indirect drops that formed on this panel and on the action of the air currents in the vicinity of the opening. Three examples of the air flow in plan view about the left windshield opening, under varying conditions, are given in figure 24. The curved portion (S) is the forward shield just ahead of the opening and (F) is the rear panel. In every case the construction at N, where the small ledge is attached to the inward edge of the curved shield, causes a small air pocket to form at this point which protects the collected drops from the air stream and allows them to fall to the bottom

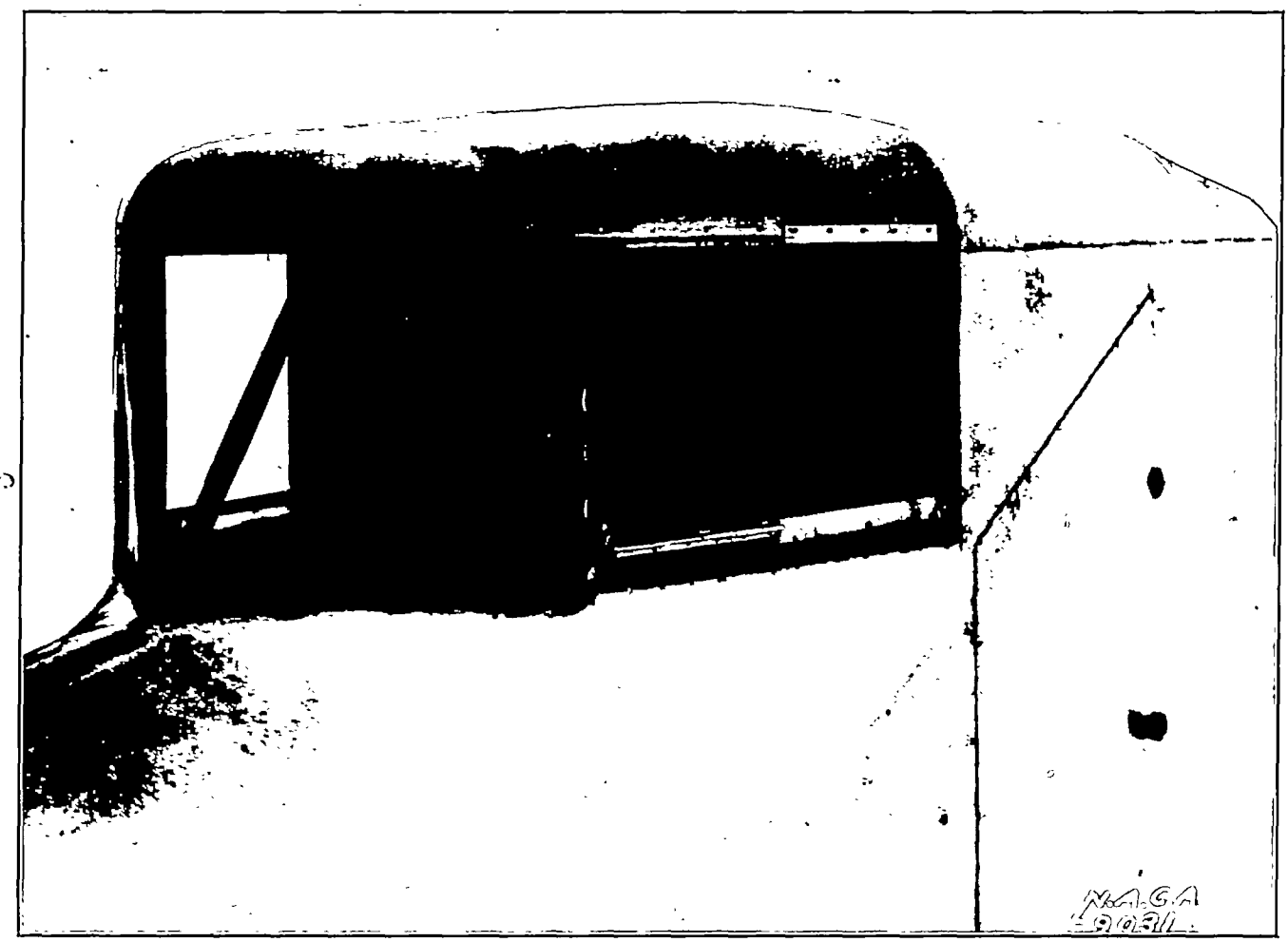

FIGURE 22.—Windshield 6B showing position of pilot's head required to obtain forward vision.

of the shield. The small ledge is in itself protected from the air stream by the curve of the windshield and does not create noticeable turbulence.

It was believed that a rear panel, shaped and located as shown in figure 24 (a), might serve efficiently as a guide to the air that flowed past the opening; but apparently the slight outward curvature of the panel created a high adverse pressure gradient that caused a strong vortex to form inside the cabin. Rain tests revealed that most of the water drops that fell on the panel were carried forward and into the opening by the reversal of flow along the panel. It may be noted in the diagram that some of the air in the general

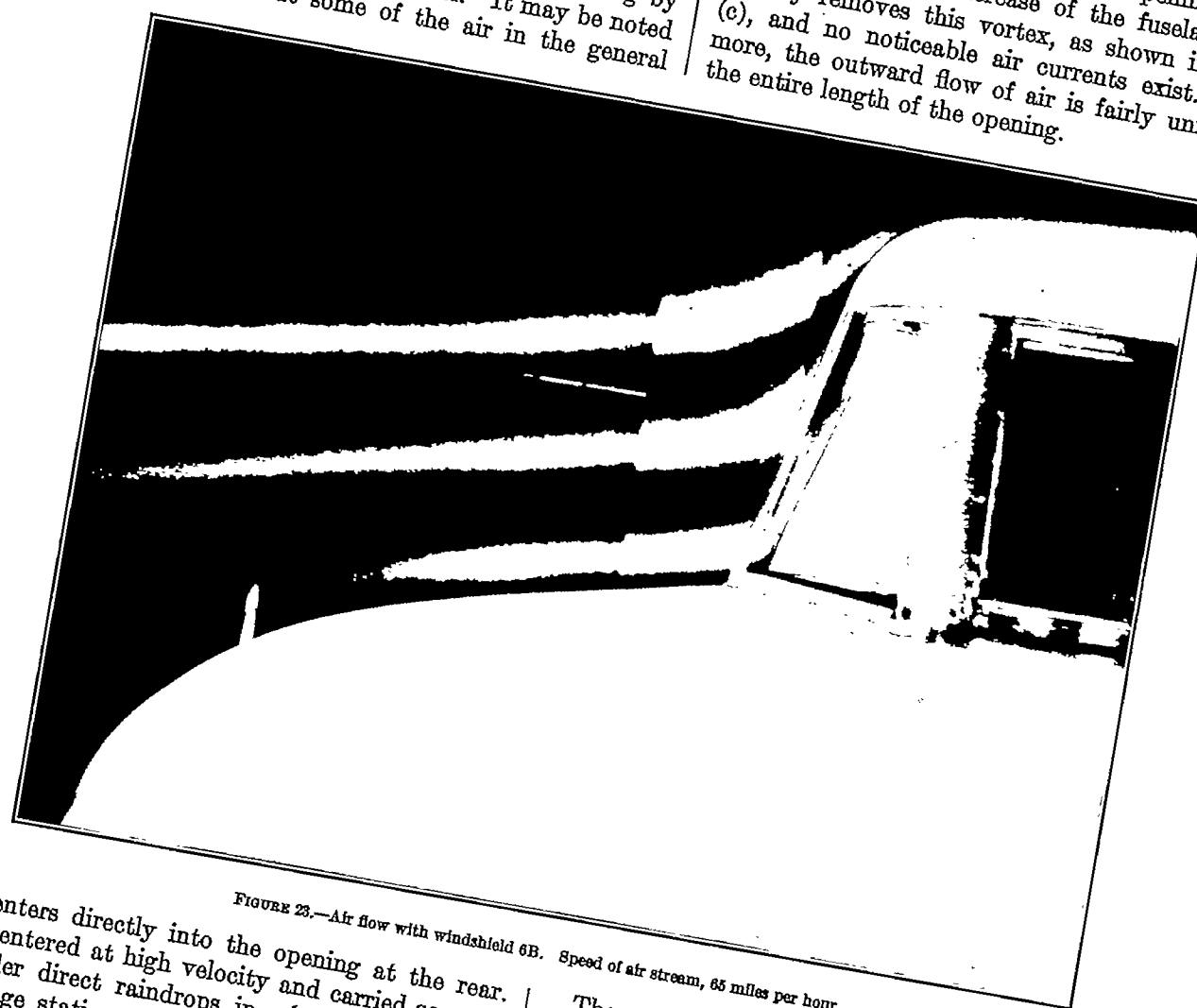

FIGURE 23.—Air flow with windshield 6B. Speed of air stream, 65 miles per hour.

stream enters directly into the opening at the rear. This air entered at high velocity and carried some of the smaller direct raindrops in with it. Increasing the fuselage static pressure, however, changed these flow characteristics considerably. Much of the inside turbulence was eliminated; the air velocity outward from the front of the opening was high; no direct air or direct water drops flowed into the opening at the rear; but the reverse flow of air over the forward part of the rear panel still existed and caused a few indirect drops to enter.

Of many forms tested, a perfectly flat vertical panel located in the plane of the opening, as in figures 24 (b) and (c), gave the best results. The improvement of the air flow about the opening, employing normal fuselage pressures, is readily seen from a comparison of (b) and (a). In (b) the pressure gradient along F is favorable; hence there is no reverse air flow and no water drops enter the opening from the rear. Some air from the direct stream still enters at the rear but its resultant direction is slightly different and it does not carry in any direct drops. The intensity and size of the vortex inside the opening are much reduced. A slight increase of the fuselage pressure entirely removes this vortex, as shown in figure 24 (c), and no noticeable air currents exist. Furthermore, the outward flow of air is fairly uniform over the entire length of the opening.

The considerations thus far have included only a general study of the flow in a horizontal plane past the center of the opening. The conditions were somewhat different along the upper and lower edges of the opening. The speed of the air past the opening was somewhat higher than that both above and below it, and thus local pressure gradients were created along the edges and an inward flow of air was induced at these points. The condition at the bottom was best corrected by raising the lower edge of the opening about 1½ inches above the fuselage and attaching thereto a small, inverted, curved gutter. The condition at the top was successfully overcome by placing a small horizontal projecting ledge along the upper edge of the opening. A sketch of these constructions

with the flat rear panel is given in figure 25. The small ledge, or baffle, along the edge CA was connected to the straight flat ledge along the edge CD and to the curved gutter along edge AB. These constructions were quite necessary to guide the indirect rain water past the open window.

For further testing the angle of the panel at the rear of the opening was made adjustable and the superposed panel DBFG was arranged to slide fore-and-aft so that the effect of variations in the form of the opening in combination with changes in the air-stream velocity and relative fuselage static pressures might be studied. A number of observations and conclusions were made from these tests.

Each variation produced a change in the normal fuselage static pressure and in the air flow about the

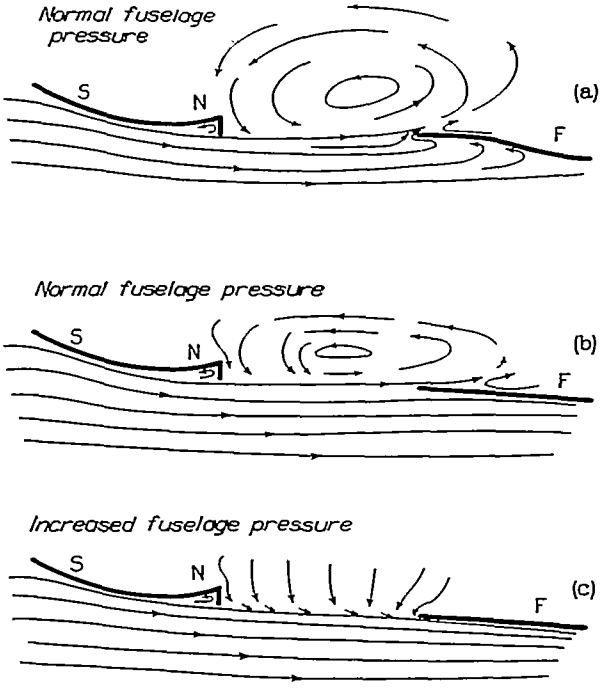

FIGURE 24.—Plan-view diagrams of three opening arrangements tested with windshield 6B showing air flow.

opening. The fuselage static pressure was in all cases nearly proportional to V^2 within the available range of wind-tunnel velocities. This quality is particularly significant; it shows that the flow about the windshield, especially in the vicinity of the opening, was comparatively free from turbulence. For an efficient design, the arrangement of the parts should be such that the normal fuselage pressure is lower with the window open than with it closed, indicating that the flow of air past the open window should be sufficiently rapid and create a sufficiently low pressure in the fuselage to minimize any air-flow losses from the cabin at points of leakage. In order to eliminate vortices that exist just inside such an opening, the initial fuselage pressure must be increased by an amount equal to about 0.02 $L\ q$ by admitting air into the fuselage from a positive source, where L is the length of the given window in inches.

For example, with one efficient arrangement of the parts in this test procedure (fig. 25), the initial fuselage pressure with the window closed was equal to $-0.31\ q$; with the window open 10.5 inches, the pressure was equal to $-0.55\ q$. Without any increase in the fuselage pressure, air currents blew in at the rear of the opening with a velocity equal to about 0.4 that of the air stream. Increasing the fuselage pressure by an amount equal to $0.02\ q \times 10.5$ or $0.21\ q$, thus making a total pressure of $-0.34\ q$, eliminated all the disturbing air currents within the 10.5-inch opening. This pressure actually forced air to flow outward uniformly through the window at about 3 miles per hour. (See fig. 24 (c).)

The positive source of air-flow pressure employed in all these tests to raise the fuselage static pressure was obtained by means of an adjustable opening in the lower front part of the fuselage. The area of opening necessary to raise the fuselage static pressure 0.21 q,

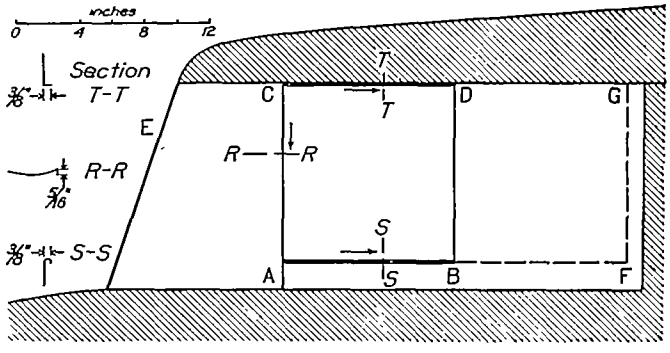

FIGURE 25.—Windshield 6B showing details of open window construction.

with the windshield arranged as shown in figure 25 and with both windows open 10.5 inches, was 24 square inches. Except for comparatively small windshield openings, the increase in fuselage static pressure varies almost directly with the area of the frontal opening.

The results of these tests indicated that the maximum length of the opening is limited to about 11 inches for efficient operation. The vertical dimension of the opening is entirely optional and either one window or both may be open without detrimental effect on their operation.

Tests with this arrangement indicate that the fuselage may be yawed at least 6° without permitting any wind or rain to enter the open window.

The most difficult problem in connection with this type of opening is, of course, to increase the forward projection, which determines the amount of forward vision available. A window length of 10½ inches with a side-windshield divergence of 8° affords about a 1½-inch projected opening forward. This arrangement permits view with both eyes to within 15° of straight

ahead and gives more than a full-forward view with one eye. This combination was the best that could be obtained in these tests using a raindrop diameter of 0.12 inch. As this size of drop occurs rarely except in cloudbursts, the forward range of vision may be increased over the values for average conditions by a suitable adjustment of the rear panel. The forward edge of this rear panel, however, must not project inward beyond a line between a point B (see fig. 20), where this window joins the fuselage contour, and the trailing edge of the forward curved portion. Otherwise, the blocking effect of the rear window will cause a sharp air current, which cannot be overcome except by excessive fuselage static pressure, to blow inward at the rear of the opening.

Figure 26 is a photograph of this fuselage-windshield combination under an actual rain test in the wind tunnel, showing the path of the drops and the manner in which they impinge on the windshield. The drops employed in this test were exceptionally large (about 0.12 inch in diameter) and they broke up into spray when they impinged on the front shield. The path of the drops as they passed along the windshield and the manner in which they dropped at the front edge of the open window may be readily distinguished. The drops pass rearward under the curved gutter along the lower edge of the window and do not enter the opening. The raindrops that strike on the upper part of the windshield are guided past the open window by the flat gutter along the upper edge.

The field of view available from this experimental model is presented by means of charts, which are constructed by assuming any defined point of vision as being at the center of a sphere of any convenient radius. The outline of the fuselage is then projected from that point onto the sphere. Horizontal and vertical planes passing through the center so that their intersection is the direction of flight are used as reference axes and the point of the intersection on the sphere (the pole) is the origin. The surface of the sphere is divided by reference lines corresponding to those of latitude and longitude. The angles of such a projection were measured by placing an N.A.C.A. visiometer in the cabin and measuring and plotting the angles determining the outline of the cabin from the point chosen directly upon the circular polar chart. A complete description of this method of measurement will be given in a future Committee publication.

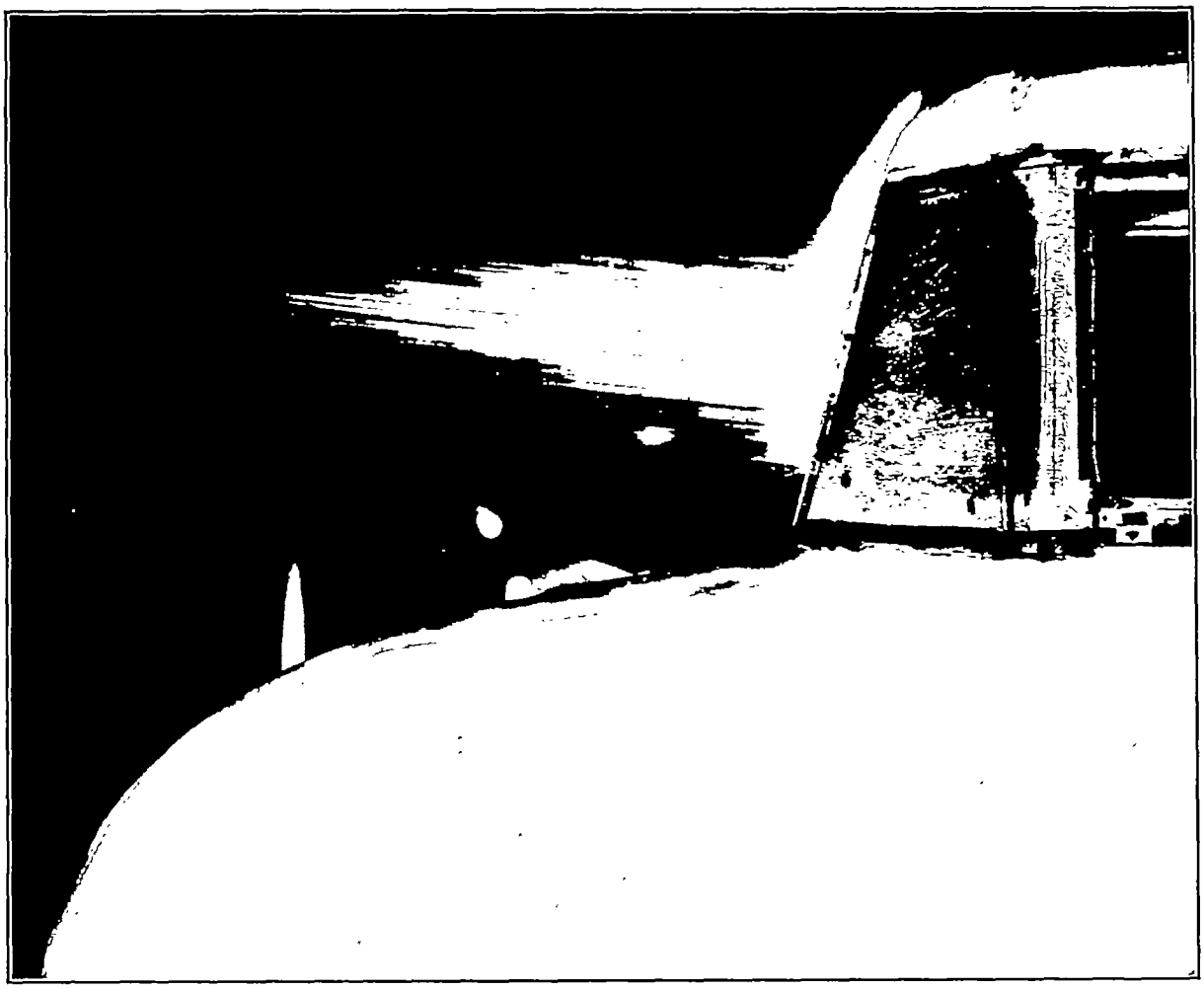

FIGURE 26.—Rain test on windshield 6B. Diameter of raindrops about 0.12 inch.

Two sample charts are presented: The first (fig. 27 (a)) is constructed with reference to a point between the pilot's eyes located in the plane of symmetry. The second (fig. 27 (b)) is constructed with the point of reference located where the right eye of the pilot would be with his head in the position to obtain maximum unrestricted forward view from the right side of the cabin.

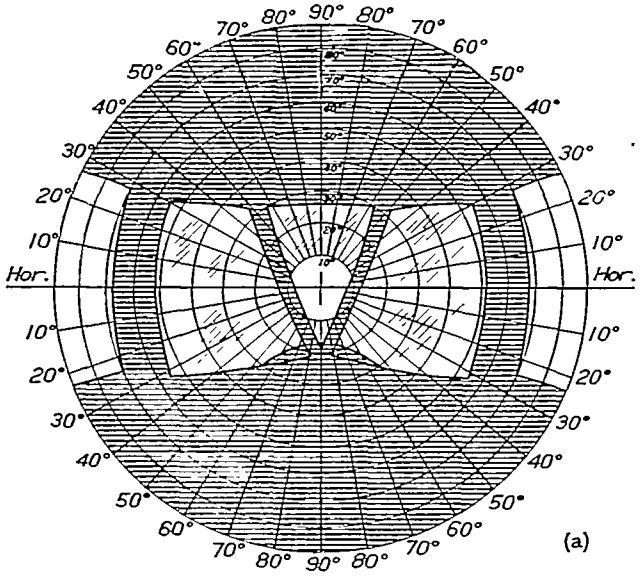

(a) Pilot's head located in center of cabin.

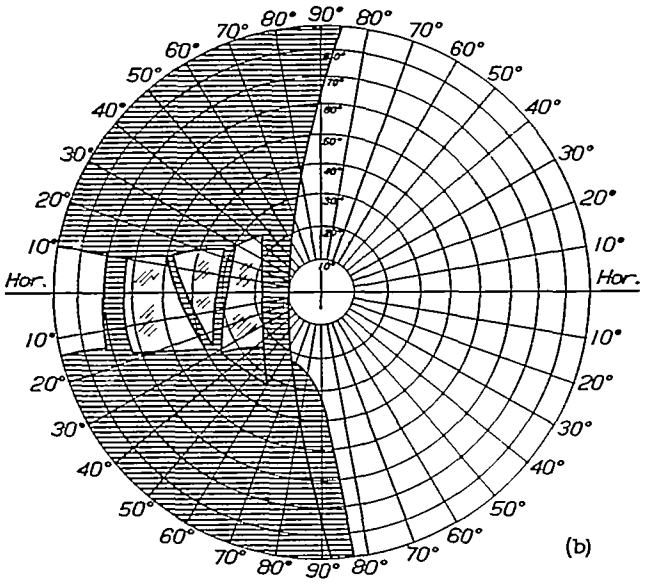

(b) Pilot's head to right.

FIGURE 27.—True surface charts of field of view from cabin with windshield 6B.

(See I_1 and I_2, fig. 20.) The position of the pilot's head to obtain this maximum forward vision is shown in figure 22. In this particular set-up, a 10-inch lateral movement of the head from the central location was necessary to obtain this position.

The significant feature of this windshield is apparent in figure 27 (b). With the head of the pilot to the side, almost half of the forward hemisphere is completely unrestricted. Furthermore, the forward vision extends several degrees the other side of straight ahead. Thus by combining the visible areas obtained from each side-front window, a nearly complete, unrestricted view of the entire forward hemisphere is available while the pilot is completely shielded from wind and rain.

Tests made in the refrigerated wind tunnel indicated that the effectiveness of this arrangement would not be affected by the formation of ice upon the windshield.

DISCUSSION

A comparative study of the air flow about the several general types of windshield-fuselage combinations reveals that adverse pressure-gradient variations immediately in front of and about any windshield increase with an increase of the pressure gradient over the forward part of the fuselage. In order to obtain a minimum of turbulence in the vicinity of the windshield, the shape of the front fuselage should therefore be devoid of any protuberances or abrupt curvatures and the fuselage lines should diverge consistently from the nose to a section aft of the pilot's cabin.

The shape of the windshield itself, of course, largely determines the general character of the flow about it, and any blunt or protruding constructions will create high local pressure gradients and induce turbulence. Front windshields with horizontal elements perpendicular to the air stream have very poor flow characteristics, and such surfaces must be sloped rearward at a considerable angle before much improvement is apparent. These tests showed that a windshield with a moderate V shape in the plan view creates much less turbulence and has a much lower velocity variation about the surfaces than any flat-front windshield with a reasonable slope. Within the limits of observation in these tests, no improvement in the flow was obtained by sloping the front panels of a good V-shaped windshield with rounded corners. Hence, it is concluded that the better design is one that tends to direct the flow of air toward the sides of the cabin rather than above it, where the pressure gradient is ordinarily high anyway. Such a windshield is thus particularly adaptable to the style of open window described in the final tests, where smooth and evenly distributed air flow is necessary to assure a uniform pressure gradient in the vicinity of the opening. In this connection it is well to emphasize the importance of a moderate curvature at the outer edge of this windshield ahead of the open window.

Insofar as rain is concerned these tests have shown that there are several separate conditions that must be satisfied for an efficient opening in any windshield. Direct raindrops that are immediately in line with an opening cannot be deflected much more than 8° by reasonable counter air currents ahead and, when the shape and position of the opening are such that more than this deflection is necessary, a vane may be mounted several feet ahead to deflect these direct drops

away from the opening. The location of such a deflecting airfoil could be made adjustable from the cabin to raise it from a recessed position in the fuselage to the position required for operation. In the case of windshield 6B, no deflecting was necessary, as the arrangement was designed to utilize an 8° deflection to obtain an exceptionally good view from the cabin.

Indirect drops, splash drops, or any drops that impinge on the windshield surfaces and ordinarily enter the cabin at the edges of the opening may be prevented from so doing either by adding a suitable system of gutters around the opening or by increasing the fuselage static pressure sufficiently to force a flow of air outward through the opening, or by a combination of both, depending on the design of the windshield. The fuselage static pressure may be increased by employing an auxiliary opening that will admit air into the cabin from any positive source. Some fuselage designs already employ such an opening for ventilating purposes. There are only a very few windshield openings possible that will not normally permit some wind to blow into the cabin. The volume and intensity of these air currents vary over a wide range depending on the design but, in every case, they can be overcome by increasing the fuselage static pressure.

The effect of propeller slipstream on the results obtained in this investigation were not studied but it is believed that it will be of minor importance in the essential designs.

No tests were made above an air speed of 75 miles per hour. Theoretical considerations, however, indicate that higher air speeds will not materially change any of the findings.

In the case of windshield 6B the width of the fuselage should have little effect on the result and the design should be as effective on a fuselage with a 2-place side-by-side seating arrangement as on a narrower one, although a narrow one will enable the pilot to take advantage of the combined field of view offered by both open windows. A similar opening arrangement could be readily adapted to the control cabins of airships.

CONCLUSIONS

1. It was found entirely practicable to design openings in airplane windshields that would permit some unobstructed view from the cabin and yet shield the pilot from wind and rain; the location and extent of such a field of view would vary, of course, with the original design of the windshield.

2. Openings up to 2 inches in width across a flat front panel in vertical or sloping windshields will permit a view directly forward without direct raindrops entering the opening if a small deflecting airfoil is mounted ahead of the windshield. A slight increase of the fuselage static pressure is necessary to keep wind and indirect water drops from entering the opening.

3. It was also found practicable to design a modified V-front windshield with an open window on each side, aft of the front windshield that will afford a field of view from the cabin over nearly the entire forward hemisphere without any appreciable amount of rain or wind entering the cabin even under ice-forming conditions. This style of opening utilizes direct-drop deflection through a small angle to provide forward vision. A slight increase in the fuselage static pressure will be necessary to prevent air currents from blowing into these openings. A simple gutter arrangement along the edges of the opening will prevent the indirect drops from entering the cabin. This design offers a relatively low resistance to the air stream, and should be both satisfactory and practical as it embodies very simple constructions.

Langley Memorial Aeronautical Laboratory,
National Advisory Committee for Aeronautics,
Langley Field, Va., *May 23, 1934.*

REFERENCES

1. Haynes, Grissom E.: Cockpits and Crashes. Aviation, May 1931, pp. 309–310.
2. Simpson, G. C.: The Water in the Atmosphere. Supplement to Nature, April 14, 1923.
3. McAdie, Alexander: The Principles of Aerography. Rand McNally & Co., 1917.
4. Milham, W. I.: Meterology. The Macmillan Co., 1918.
5. Harris, Thomas A.: The 7- by 10-Foot Wind Tunnel of the National Advisory Committee for Aeronautics. T.R. No. 412, N.A.C.A., 1931.