REPORT No. 505

TESTS OF NACELLE-PROPELLER COMBINATIONS IN VARIOUS POSITIONS WITH REFERENCE TO WINGS

IV—THICK WING—VARIOUS RADIAL-ENGINE COWLINGS—TANDEM PROPELLERS

By James G. McHugh

SUMMARY

This report is the fourth of a series giving the results obtained from tests in the N.A.C.A. 20-foot wind tunnel to determine the interference lift and drag and the propulsive efficiency of wing-nacelle-propeller combinations. Previous reports give the results of tests with tractor propellers with various forms of nacelles and engine cowlings. This report gives the results of tests of tandem arrangements of engines and propellers in 11 positions with reference to a thick wing.

The wing had an aspect ratio of 3, and a maximum thickness of 20 percent of the chord. The engines were 4/9-scale models of a Wright J-5 radial air-cooled engine and were installed in nacelles of the same scale. The propellers were 4 feet in diameter. Tests were made with two different nacelles and with several different combinations of engine cowlings. The effects of variations in propeller spacing and in the angle of cowling-ring chord to thrust line were also investigated.

The lift, drag, and propulsive efficiency were determined at several angles of attack for the 2 nacelle shapes with various combinations of engine cowlings in each of 3 nacelle locations. From these tests the nacelle and cowling combination that gave the highest net efficiency was determined and used in all other nacelle locations tested.

The results indicate that with a tandem arrangement of engines and propellers the best over-all efficiency is obtained by using a nacelle of the lowest drag it is possible to obtain without impairing the cooling of the cylinders. Of the several engine-cowling combinations tested, best results were obtained with an N.A.C.A. hood over the front cylinders and a ring over the rear cylinders. When a large nacelle is used with this cowling combination there is little difference between the net efficiencies for positions with the nacelle faired into the wing and positions with the thrust line about half a propeller diameter below the lower surface of the wing, both positions being greatly superior to any position tested above the wing. These positions and cowlings, however, are considerably inferior to the best tractor-propeller arrangements previously reported.

INTRODUCTION

This report is the fourth of a series giving the results of an investigation to determine the mutual interference effects of wings, nacelles, and propellers on the aerodynamic characteristics of various combinations of these bodies. The program, originally presented at the Fourth Annual Aircraft Engineering Research Conference in May 1929, has subsequently been extended and now includes nacelles with tractor, pusher, and tandem propellers and biplane as well as monoplane wings. Tests have been made with several propeller pitch settings and with numerous types of cowlings of air-cooled engines.

The first three reports of the series (references 1, 2, and 3) have given the results obtained with a tractor propeller operating in proximity to monoplane wings. This fourth report presents the results obtained from tests of tandem arrangements of propellers and radial air-cooled engines in 11 positions with reference to a thick wing. Tests were made with two different nacelle shapes and with several different engine cowlings on each nacelle. A few additional tests were made to determine the effect of propeller spacing on propulsive efficiency. In order to prevent the number of tests from becoming excessive, the test positions were limited to those which merited practical consideration.

The locations of the nacelles with reference to the wing, the shape of the nacelles, and the various types of cowlings to be used were determined from a study of domestic and foreign airplanes incorporating tandem-engine installations in their design.

In order to show the relative merits of the various arrangements of wings, nacelles, and propellers with respect to performance a system of comparison has been developed, and in this report the relative merits of the various combinations are compared for two flight conditions.

Previous to these tests very little information was available on the effect of operating propellers in tandem. A few isolated tests had been made of tandem propellers alone, but the tests discussed here are the

first that have attempted to show the mutual interference effects of wings, nacelles, and propellers.

These tests were conducted in the N.A.C.A. 20-foot propeller-research tunnel at Langley Field, Va.

APPARATUS AND METHOD

The propeller-research tunnel in which these tests were made is described in reference 4. With the exceptions cited below, the standard apparatus and test methods were used. The wing used in the tests had a 5-foot chord, a 15-foot span, and a maximum thickness of 20 percent of the chord. It is described in detail in reference 1.

The engine nacelles, constructed of sheet aluminum, were similar to nacelles required for Wright J-5 radial engines and were four-ninths full scale. Detailed wooden models of the engines were installed in the nacelles. One nacelle, constructed with the dimensions given in figure 1 and called "large nacelle", represents what is believed to be the optimum practical nacelle shape for a propeller spacing of one diameter. Figure 2 shows the large nacelle modified for a propeller spacing of one and one-half diameters. The dimensions of a second nacelle, called a "small nacelle", are given in figure 3.

The engine cowlings used consisted of the N.A.C.A. hood, shown in figures 1 and 2, and the two variable-angle rings shown in figure 3. These rings are identical to the one shown in figure 3, reference 2.

The propellers used, 1 right-hand tractor and 1 left-hand pusher, were both 4 feet in diameter and were geometrically similar to the Navy no. 4412, 9-foot-diameter aluminum alloy propeller. A number of full-scale tests of this propeller have been made and are discussed in references 5 and 6. The blades may be turned in the hub to give different pitch settings.

Each propeller was driven by a 10-inch-diameter, 220-volt alternating-current induction motor capable of developing 25 horsepower at 3,600 r.p.m.; the two motors were operated in parallel. Wires were led from the motors down the struts into the wing and along the supporting members to control equipment below. These wires were carefully taped to the struts and subsequent tests indicated that they had a negligible effect on the tare drag. A dynamometer was used for calibrating the motors and curves of active current against torque for various values of frequency were obtained for each motor.

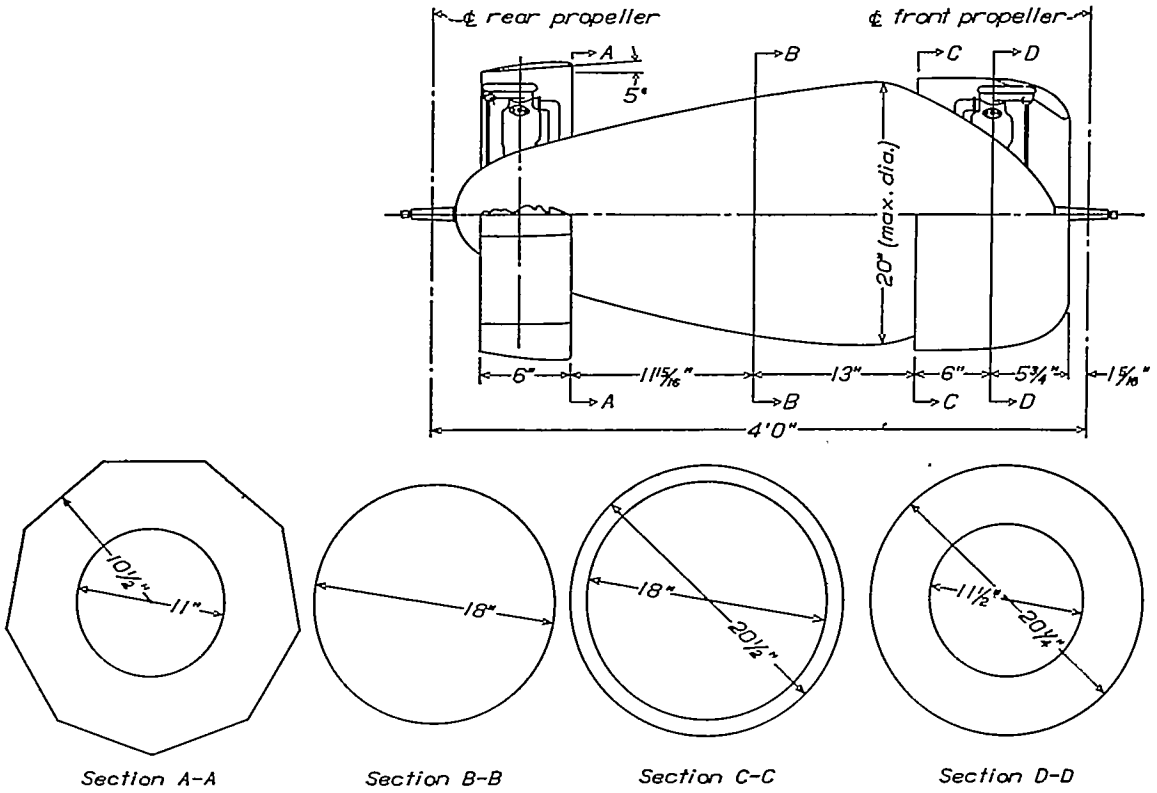

FIGURE 1.—Large nacelle and engine assembly, propeller spacing 1 diameter.

The motors were driven from a variable-speed alternator, speed control being obtained by controlling the frequency of the current output from the alternator. Revolution speed was indicated by a condenser-type electric tachometer connected by wires to an indicating instrument on the control board.

In order to make the results obtained from the two sets of pitch settings herein discussed directly comparable with the results obtained from the tests reported in references 1, 2, and 3, the pitch of the two propellers

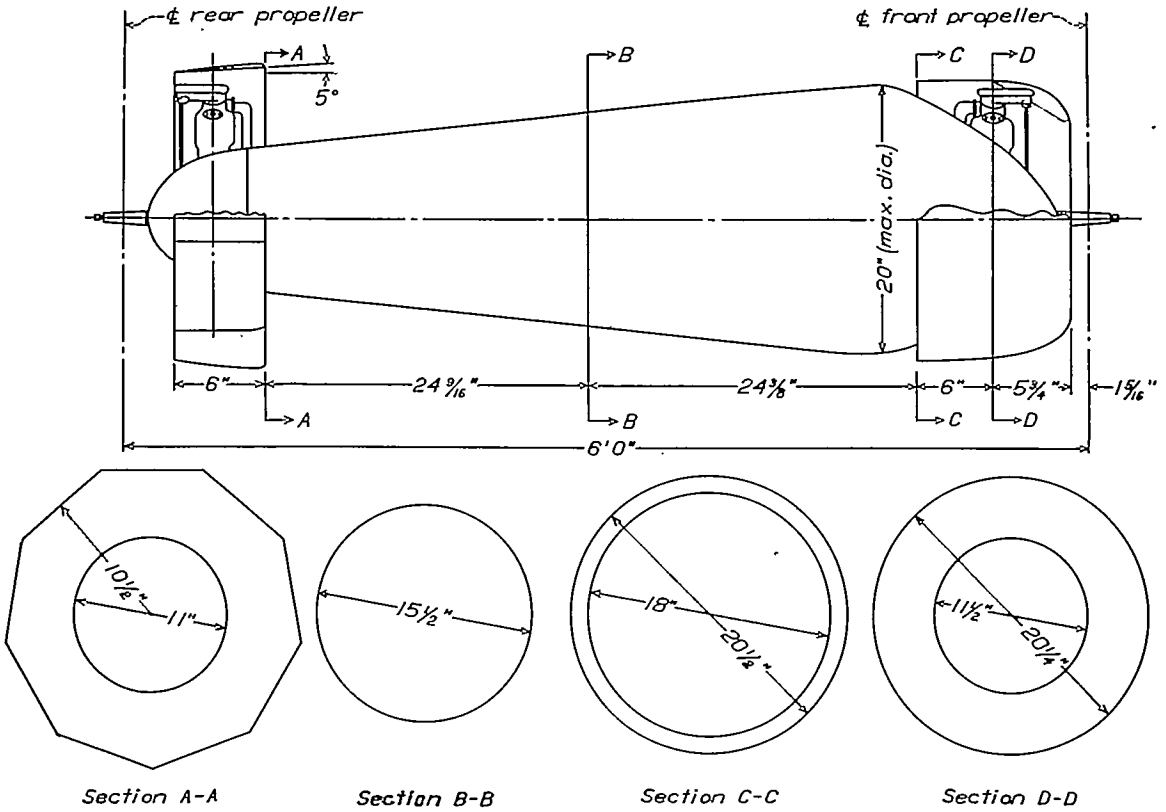

FIGURE 2.—Large nacelle and engine assembly, propeller spacing 1½ diameters.

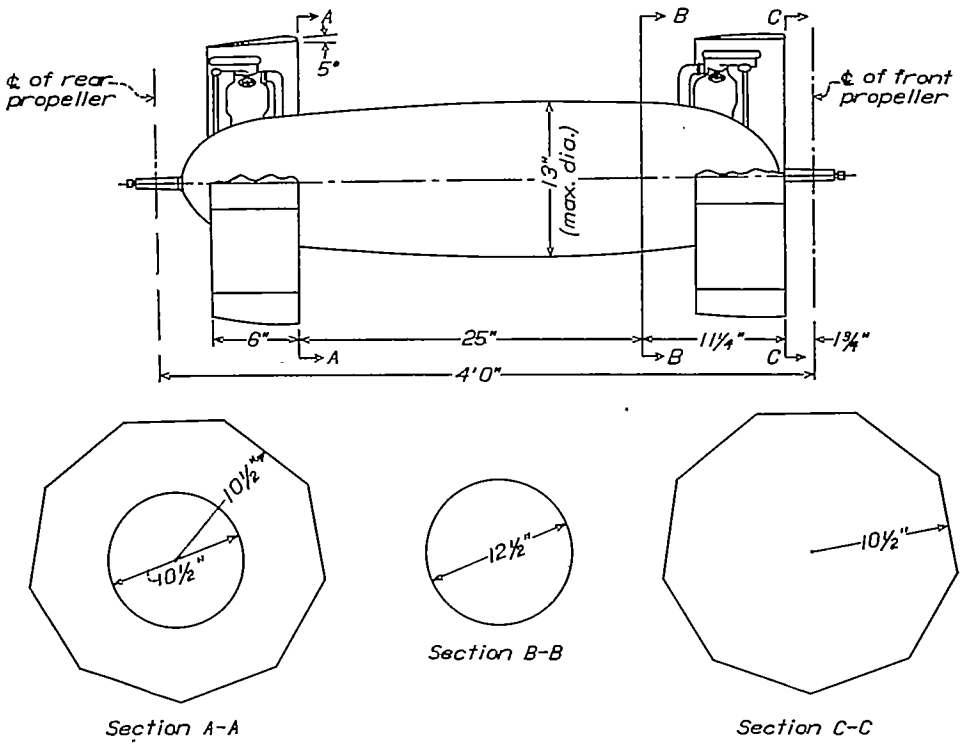

FIGURE 3.—Small nacelle and engine assembly, propeller spacing 1 diameter.

was adjusted to give equal power coefficients at peak propulsive efficiency and also to bring the points of

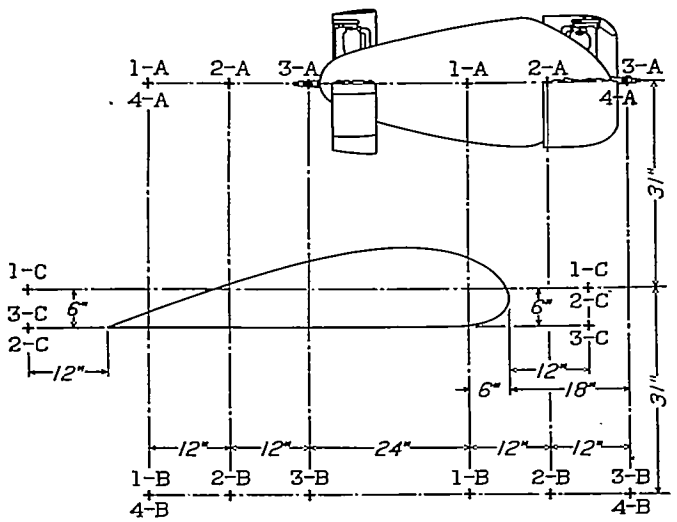

FIGURE 4.—Wing-nacelle test locations.

peak propulsive efficiency at values of $V/nD=0.65$ for one set of pitch settings and at $V/nD=0.83$ for the other set of pitch settings, these values of V/nD being the points at which peak propulsive efficiency occurred in the tractor-propeller tests of references 1, 2, and 3 for the 17° and 22° pitch settings, respectively.

In order to determine the effect of nacelle shape, engine cowling, and angular setting of the variable-angle ring on the net efficiency of the wing-nacelle-propeller combination, drag and propeller tests were made using two different nacelle shapes and the following combinations of engine cowling:

With the large nacelle (fig. 1)—

- Exposed cylinders front, exposed cylinders rear.
- N.A.C.A. hood front, exposed cylinders rear.
- N.A.C.A. hood front, variable-angle ring rear.
- Variable-angle ring front, variable-angle ring rear.

With the small nacelle (fig. 3)—

- Exposed cylinders front, exposed cylinders rear.
- Exposed cylinders front, variable-angle ring rear.
- Variable-angle ring front, exposed cylinders rear.
- Variable-angle ring front, variable-angle ring rear.

In order to determine the optimum ring setting of the variable-angle ring, tests were made, in each of the above-mentioned combinations where the ring type of cowling was used, with the chord line of the ring sections set at several different angles with respect to the thrust line of the propellers.

All the above-mentioned nacelle and cowling arrangements were located in position 2–B as shown in figure 4, and it was found by testing some of them in positions 2–A and 1–C that their order of merit was apparently independent of nacelle location.

FIGURE 5.—Wing-nacelle combination mounted for test in position 4–A.

Using the best nacelle-cowling arrangement determined from the above-mentioned tests, tests were made with the wing and nacelle in the relative positions marked in figure 4. The nacelle positions are designated by the system of letters shown. In the figure the crosses indicate the positions of the center lines of the propeller hubs.

The wing-nacelle combinations were mounted on the balance by means of standard supports described in reference 7. With these supports the airfoil pivots about a line near the lower surface 25 percent of the chord back from the leading edge, the angle of attack being adjusted by a crank operating a post connected with a sting on the airfoil. The airfoil and nacelle mounted in one test position are shown in figure 5. Figures 6, 7, and 8 are photographs of other wing-nacelle combinations. In all cases the thrust line of the propeller was parallel to the wing chord. The lift and drag forces were measured simultaneously by balances on the floor below. The Reynolds Number varied from about 2,150,000 at the lowest air speed (50 miles per hour) to about 4,300,000 at the highest speed (100 miles per hour).

A series of tests at various air speeds was made with the wing alone at angles of attack of −5°, 0°, 5°, 10°, and 12°. Tests were also made without the wing, at an angle of attack of 0°, for a few of the more important nacelle and cowling arrangements.

With each wing-nacelle combination a run was made at several air speeds with the propellers removed. The lift, drag, moment, and air speed were measured at angles of attack of −5°, 0°, 5°, 10°, and 12°. A second test was then made with the propellers operating and with the tunnel operating at several air speeds. In this test the lift, drag (or thrust), torque, propeller revolution speed, and air speed were measured at angles of attack of −5°, 0°, and 5°.

Tare-drag measurements were made with the wing supported free of the balance supports. Other tests indicated that the propeller had a negligible effect on the tare drag.

RESULTS

The measured lift and drag were reduced to the usual coefficients:

$$C_L=\frac{\text{lift}}{qS}$$

$$C_D=\frac{\text{drag}}{qS}$$

$$C_m=\frac{\text{moment}}{qSc}$$

where q, the dynamic pressure ($\frac{1}{2}\rho V^2$).
ρ, mass density of the air.
V, velocity.
S, area of the wing.
c, chord of the wing.

(All moments were taken about the quarter-chord point of the wing.)

These coefficients were first plotted against the dynamic pressure q and then cross-plotted as C_L, C_D, and C_m against α (angle of attack) at values of the dynamic pressure corresponding to 50, 75, and 100 miles per hour in standard air.

The lift and drag coefficients have been plotted as polar diagrams so arranged as to facilitate comparison of the results with various cowlings in the different nacelle locations. Figure 9 shows the results for various cowlings and nacelles in position 2–A; figure 10 shows the results for position 2–B; and figure 11 the results for position 1–C. Figures 12, 13, and 14 compare the effect of various locations of the completely cowled large nacelle in positions above, below, and in the wing, respectively, and figure 15 shows the relative merits of representative nacelle locations above, below, and in the wing. In all these diagrams the polar of the wing alone is also given. All the polars are plotted from the data obtained at an air speed of 100 miles per hour. The results are also given in tables I and II together with those for two other air speeds, 50 and 75 miles per hour. The values of the moment coefficients, which were found to be the same for all air speeds, are given in table III.

The results with the propeller operating are reduced to the usual coefficients and are based on the revolution speed of the front propeller. Owing to the characteristics of the alternating-current motors used to drive the propellers the ratio

$$\frac{\text{revolution speed of the front propeller}}{\text{revolution speed of the rear propeller}}$$

was practically unity except at very low values of V/nD.

$$C_T=\frac{T-\Delta D}{\rho n_F^2 D^4}$$

$$C_{P_F}=\frac{P_F}{\rho n_F^3 D^5}$$

$$C_{P_R}=\frac{P_R}{\rho n_F^3 D^5}$$

$$C_{P_{\text{total}}}=C_{P_F}+C_{P_R}$$

$$\eta=\text{propulsive efficiency}$$

$$=\frac{\text{effective thrust}\times\text{velocity of advance}}{\text{total motor power}}$$

$$=\frac{(T-\Delta D)V}{P_{\text{total}}}$$

$$=\frac{C_T}{C_{P_{\text{total}}}}\left(\frac{V}{n_F D}\right)$$

C_S=propeller-operating coefficient (reference 5)

$$=\sqrt[5]{\frac{\rho V^5}{P_{\text{total}}\, n_F^2}}$$

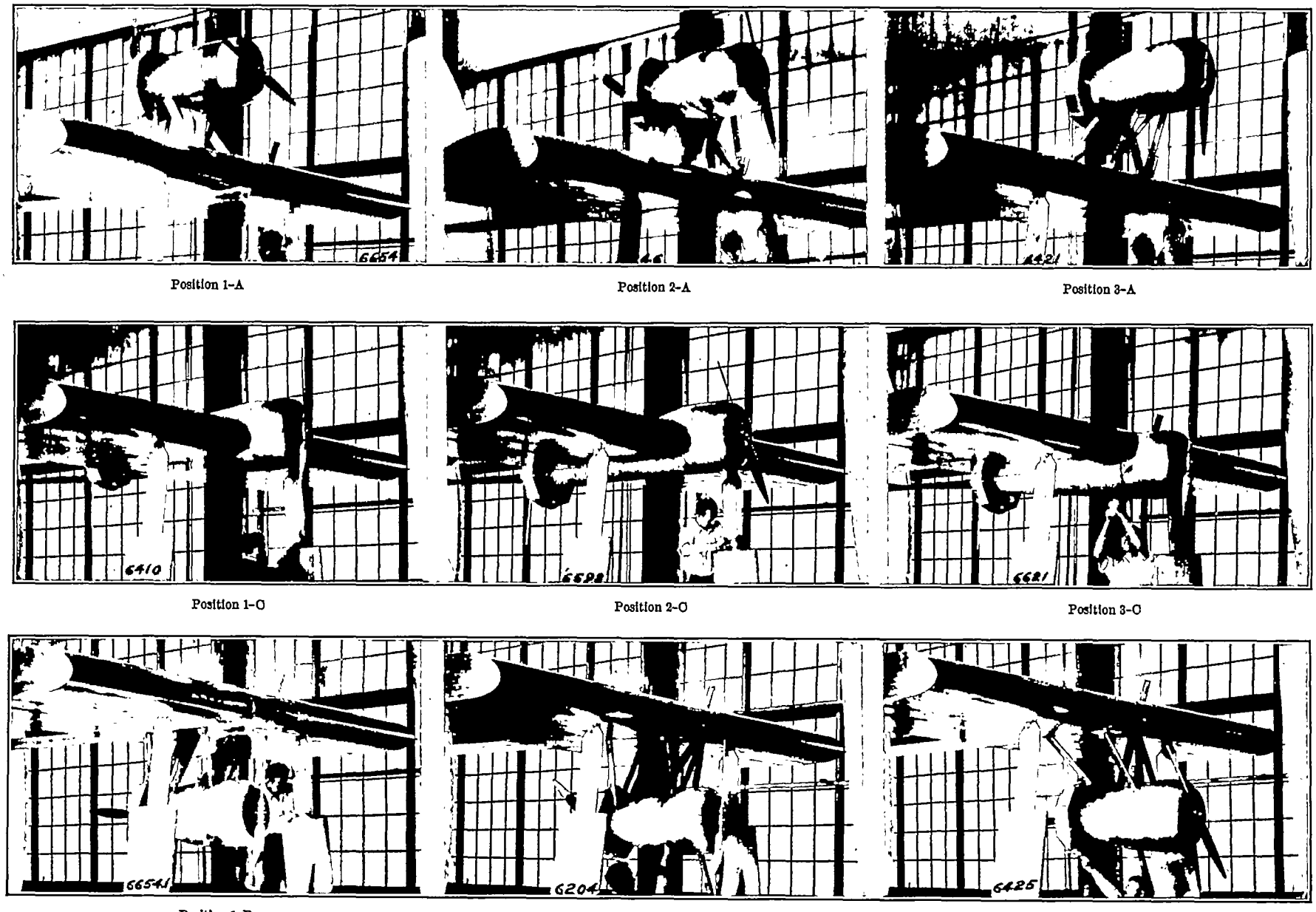

FIGURE 6.—Wing-nacelle positions with completely cowled large nacelle.

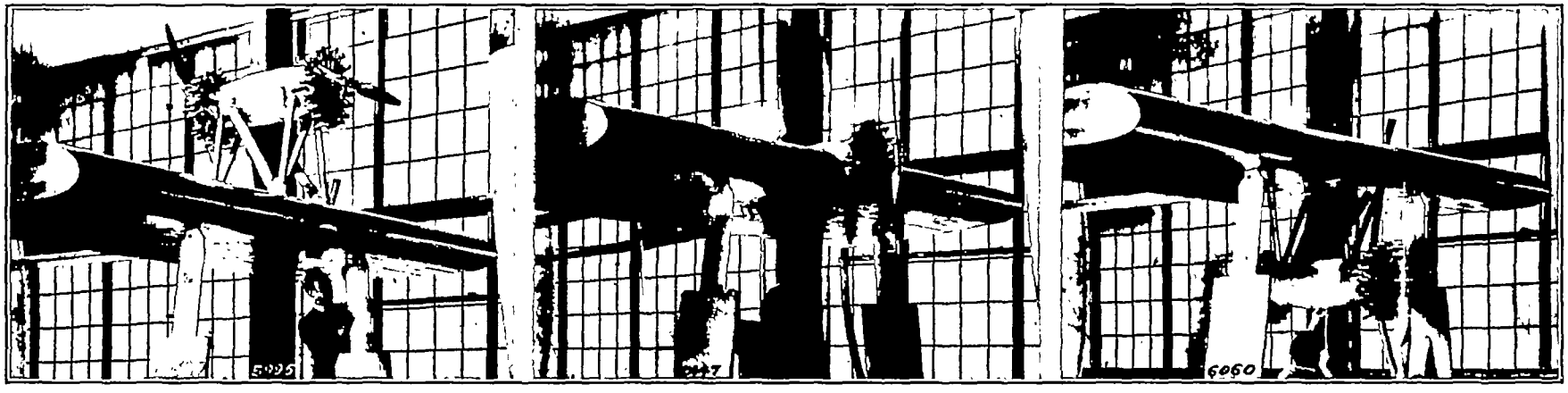

Position 2-A | Position 1-C | Position 2-B

Small nacelle, exposed cylinders front and rear

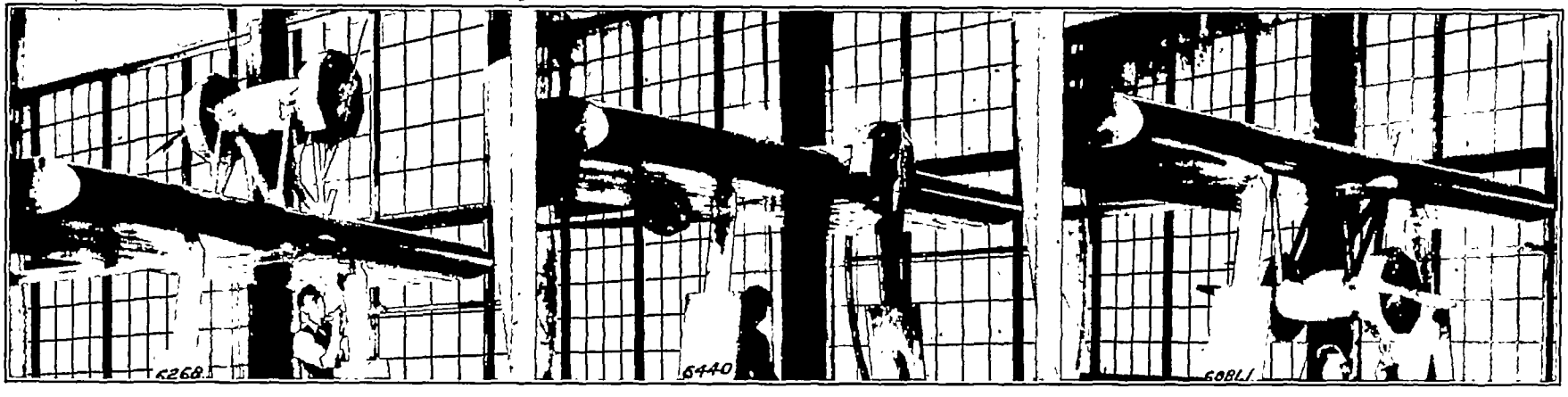

Position 2-A | Position 1-C | Position 2-B

Small nacelle, cowling ring front and rear

FIGURE 7.—Small nacelle with various cowlings in three different locations.

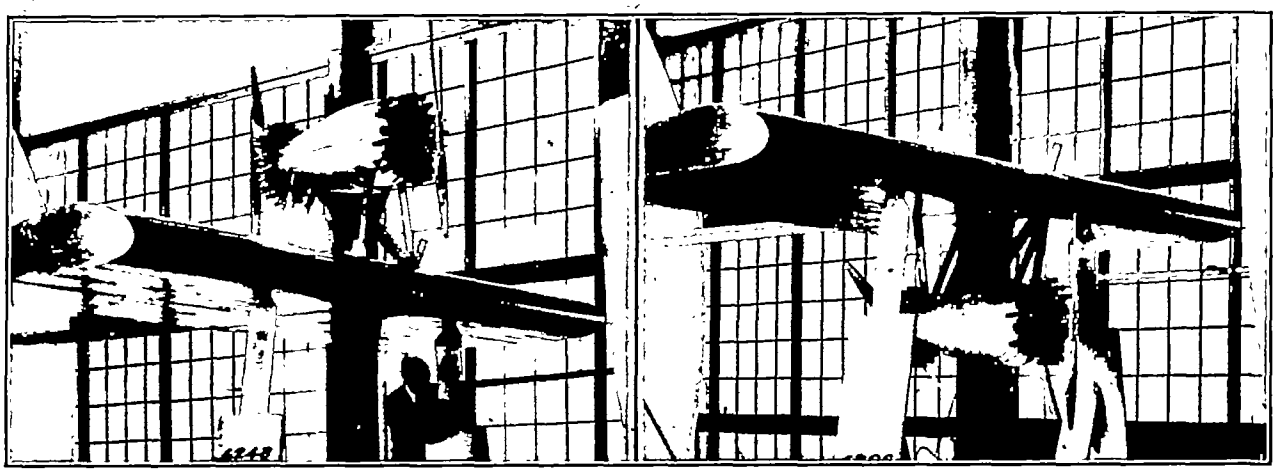

Position 2-A Position 2-B

N.A.C.A. nacelle, exposed cylinders front and rear

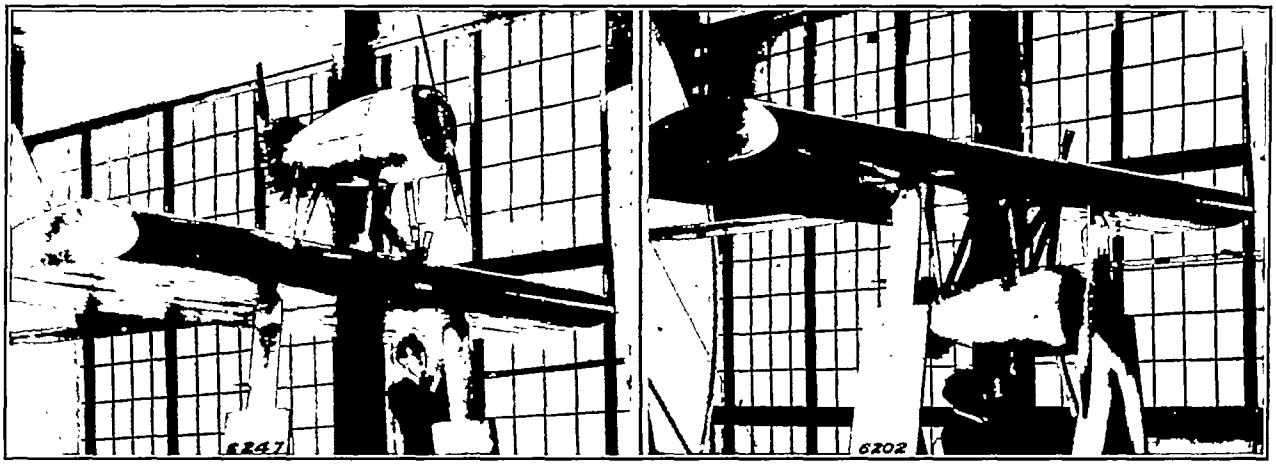

Position 2-A Position 2-B

N.A.C.A. nacelle, N.A.C.A. hood front, exposed cylinders rear

FIGURE 8.—Large nacelle with various cowlings in two different locations.

Where

T, thrust of propellers.

ΔD, change in drag of body due to action of propellers.

T-ΔD, effective thrust (discussed in reference 5).

n_F, front-propeller revolutions per unit time.

D, propeller diameter.

P_F, front-engine power.

P_R, rear-engine power.

P_{total}, P_F+P_R.

ρ, mass density of the air.

C_L and C_m are computed as before but are now called C_{L_P} and C_{m_P}.

The coefficients for all nacelle positions and cowlings at various values of V/nD and different angles of attack are given in tables IV to XI, inclusive:

Table IV.—Thrust coefficient (C_T).

Table V.—Front-propeller power coefficient (C_{P_F}).

Table VI.—Rear-propeller power coefficient (C_{P_R}).

Table VII.—Propulsive efficiency (η).

Table VIII.—Propeller-operating coefficient (C_S).

Table IX.—Lift coefficient with propeller operating (C_{L_P}).

Table X.—Moment coefficient with propeller operating (C_{m_P}).

Table XI.—Propeller coefficients—nacelle alone tests.

Since only individual values of the preceding coefficients are used in later comparisons, all curves are not reproduced here. Figure 16 is a typical plot of such values. (See also figs. 9–12 of reference 1.)

Aspect ratio and tunnel-wall interference corrections have not been made as the results are intended for comparative purposes only.

ACCURACY

All readings were taken on scales and instruments that were calibrated frequently during the tests. The

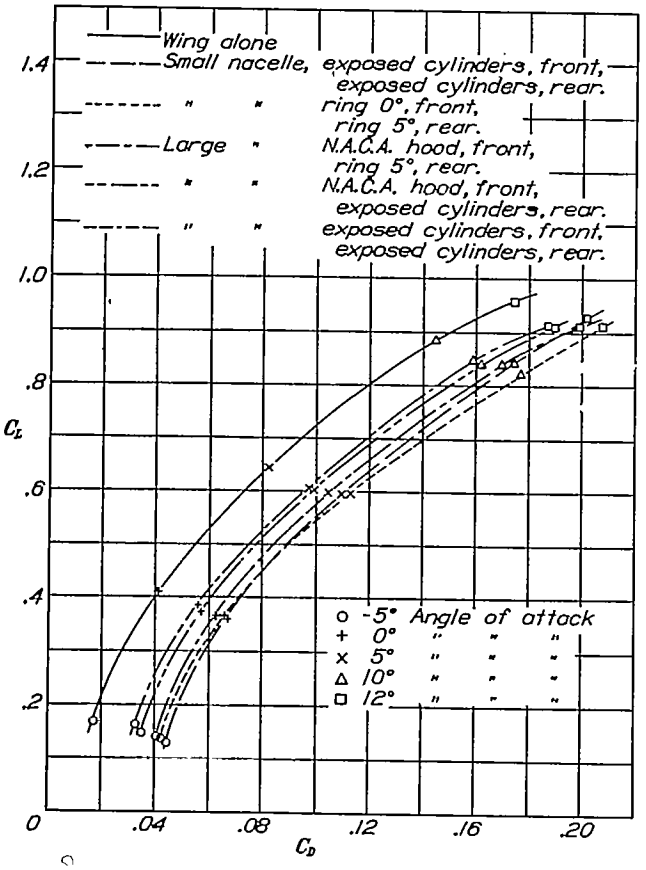

FIGURE 9.—Polar diagrams for various nacelles and cowlings in position 2-A.

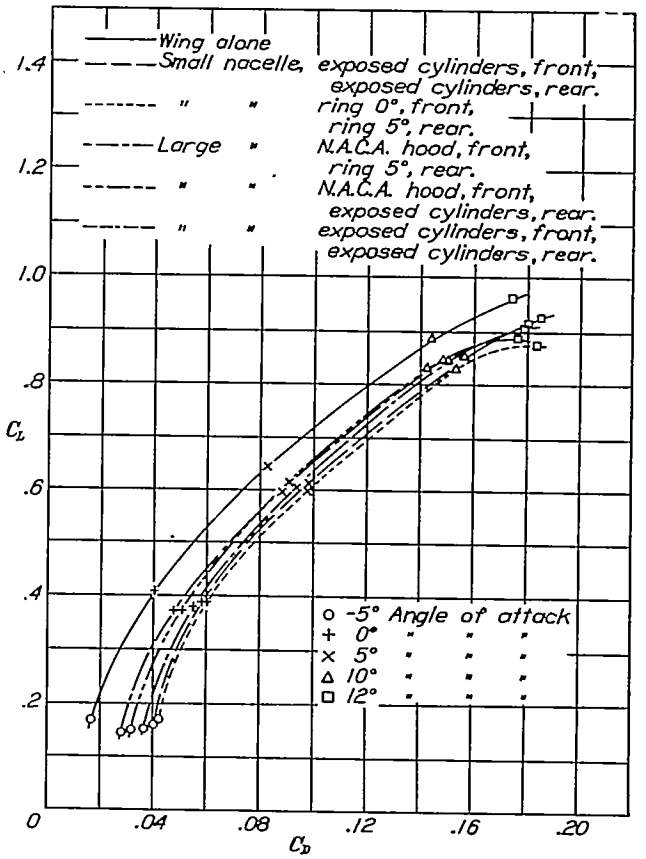

FIGURE 10.—Polar diagrams for various nacelles and cowlings in position 2-B.

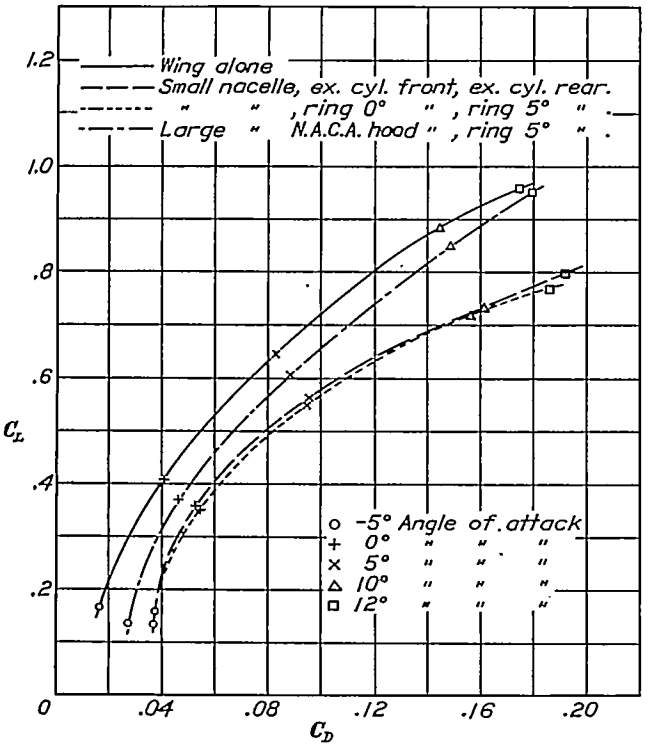

FIGURE 11.—Polar diagrams for various nacelles and cowlings in position 1-C.

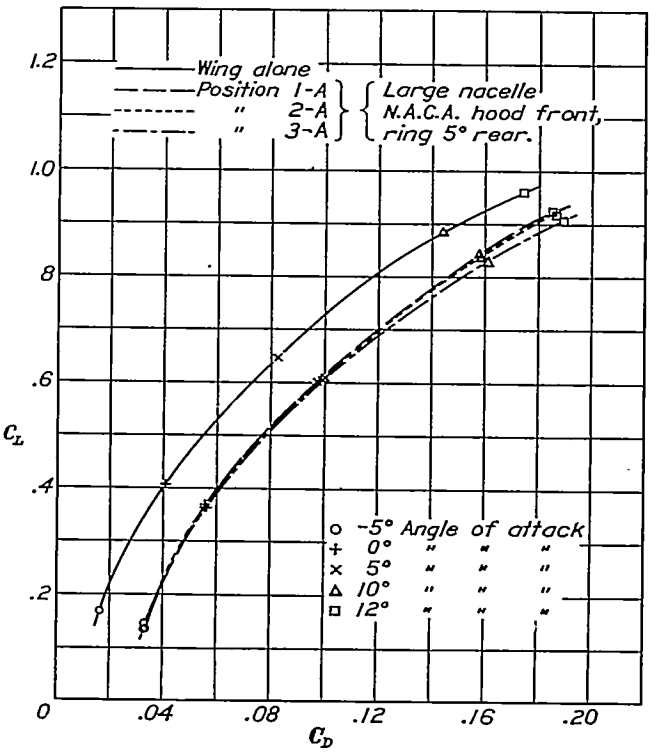

FIGURE 12.—Polar diagrams for completely cowled large nacelle in three positions above wing.

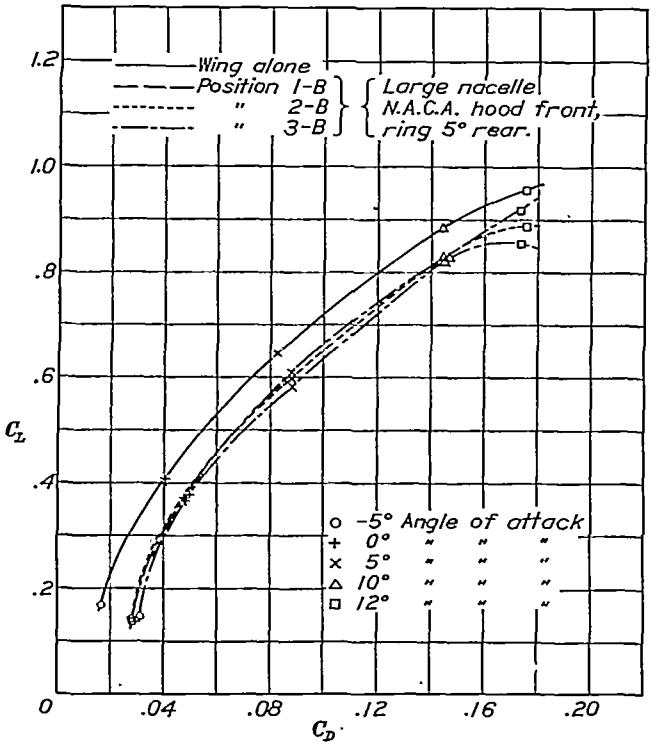

FIGURE 13.—Polar diagrams for completely cowled large nacelle in three positions below wing.

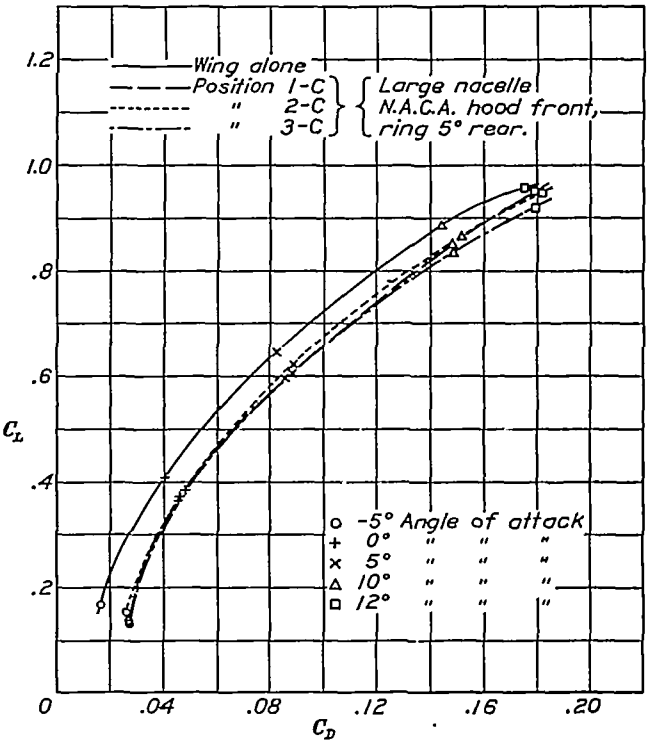

FIGURE 14.—Polar diagrams for completely cowled large nacelle in three positions in wing.

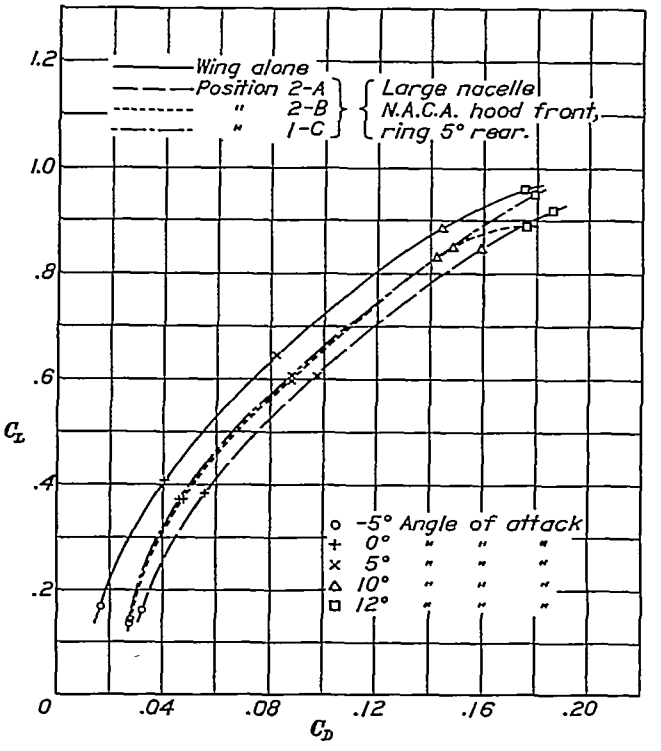

FIGURE 15.—Polar diagrams for completely cowled large nacelle above, below, and in wing.

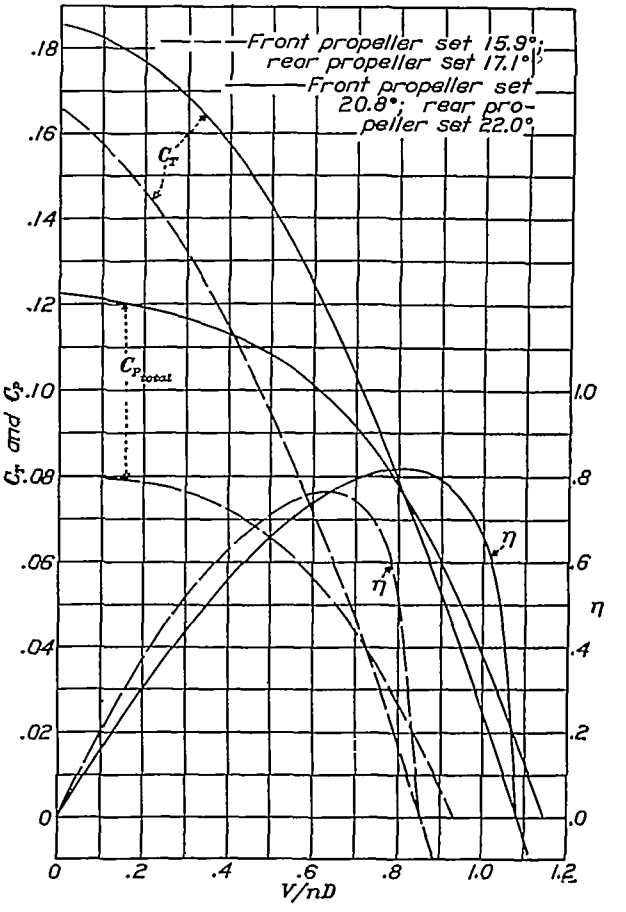

FIGURE 16.—Typical plots of $C_{P_{total}}$, C_T, and η against V/nD. Large nacelle with N.A.C.A. hood front and variable-angle ring set 5° rear. Position 2-A. Angle of attack, 0°.

angle of attack of the airfoil was set within 5′ of the desired angle with an inclinometer. The calibrations of motor torque are believed to be correct to within 0.1 foot-pound, and the motor revolution speed was measured to the nearest 10 r.p.m. The lift and drag were read to the nearest pound.

With the wing at high angles of attack, particularly near the burble point of the airfoil, the forces fluctuated rapidly and the above accuracy could not be obtained. The major portion of the faired results is believed to be correct within ±2 percent, as indicated by the scattering of the test points.

DISCUSSION

The chief factors that determine the merits of a wing-nacelle-propeller combination are propulsive efficiency, lift chargeable to propeller and nacelle, and effective nacelle drag. In order to be strictly accurate, any comparison of the relative merits of a number of wing-nacelle-propeller combinations should take account of each factor. However, for a general case, no system of comparison so far devised is capable of taking into account each of the contributing factors in their exact proportion. Analysis of the problem immediately indicates that if the forces of propeller thrust and effective nacelle drag are represented as collinear vectors the force vector representing the lift chargeable to the propeller and nacelle must be represented at right angles to the force vectors of propeller thrust and effective nacelle drag, and a completely satisfactory method for evaluating lift in terms of thrust or drag is difficult to obtain.

Previous reports on this subject (references 1, 2, and 3) have taken account of the lift effect by charging to the nacelle the difference between the drag of the wing alone and the drag of the wing-nacelle combination at the angle of attack which, with propeller operating, gave the same lift coefficient as the wing alone. In this report, the various wing-nacelle-propeller combinations are compared for the high-speed and the climbing flight conditions by this method, which is fully discussed in reference 1.

It is desirable to point out here that, although the effect of the propeller and nacelle on wing lift is small at low angles of attack (at conditions corresponding to high or cruising speeds), it may be appreciable at high angles of attack (conditions corresponding to landing) and care should be used in design to consider these effects on lift for the latter condition. At high angles of attack the nacelle drag forms such a small proportion of the total drag that there is no material difference in total drag with different arrangements and the discussion of relative merit may be confined to the high-speed and climbing conditions mentioned in the preceding paragraph.

Drag.—Of the remaining factors affecting the merit of a wing-nacelle-propeller combination it may be said that, since the variation in propulsive efficiency for different nacelle positions is fairly small, the most important item is nacelle drag. This discussion will first consider the factors influencing the drag of the nacelle and subsequently will consider the effects of the propeller.

With reference to the polar diagrams of various nacelles and cowlings in position 2–A (fig. 9), position 2–B (fig. 10), and position 1–C (fig. 11), it will be noted that the drag of the combination with the large nacelle is appreciably less than it is with the small nacelle, regardless of the type of engine cowling used. With reference to the small nacelle it may also be seen that, except in the case of position 2–A at low angles of attack, the addition of cowling rings increased the drag over the values obtained with exposed cylinders. The effect of engine cowling on the large nacelle is shown in figures 9 and 10. It may be seen that placing the N.A.C.A. hood over the front-engine cylinders and leaving the rear engine with exposed cylinders shows a great decrease in drag as compared to that for the large nacelle with exposed cylinders both front and rear. The additional decrease in drag obtained through cowling the rear engine cylinders, although appreciable, is relatively small as compared to the reduction in drag obtained by cowling the front engine with the N.A.C.A. hood.

The effect of nacelle location on drag is of about equal importance with the effects of nacelle shape and cowling. Figures 12, 13, and 14, show the effects of variations in location of the completely cowled large nacelle in positions above the wing, below the wing, and in the wing, respectively. An inspection of these charts reveals the fact that moving the nacelle fore-and-aft has very little effect on nacelle drag, regardless of whether the nacelle be above the wing or below the wing. Figure 15 shows typical polars of the completely cowled large nacelle in positions above, below, and in the wing. It is to be noted that positions in the wing and positions below the wing are about equal with respect to drag and that both are greatly superior to positions above the wing.

The effect on nacelle drag of angular setting of the variable-angle ring is shown in figures 17 and 18. It is to be noted that the nacelle drag is not appreciably affected by rear-ring setting within the range of −5° to 10°, but is quite sensitive to front-ring setting.

Propulsive efficiency.—Figures 17 and 18 show the effect, with the small nacelle, of variable-angle ring setting on propulsive efficiency. Comparisons are made at a constant value of V/nD. With reference to figure 17, it will be noted that with the rear cylinders exposed the peak of the propulsive-efficiency curve

apparently occurs at a front-ring setting of about 5°. Putting a ring with a setting of 5° over the rear cylinders increased the propulsive efficiency for all values of front-ring setting, but the maximum value apparently still occurs at a front-ring setting of about 5°. The

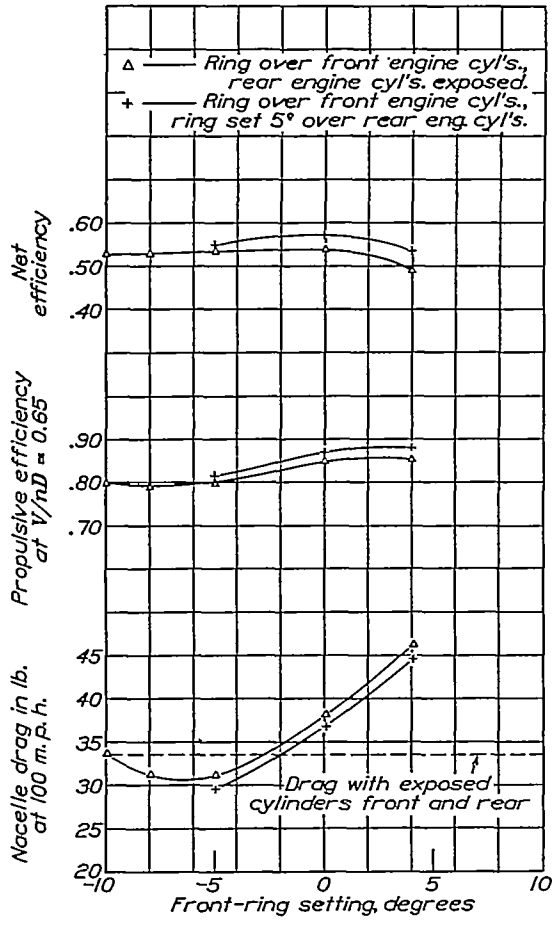

FIGURE 17.—Effect of front-ring setting on nacelle drag, propulsive efficiency, and net efficiency. Small nacelle in position 2-B.

effect of varying the angular setting of the rear ring is shown in figure 18. It may be seen that with the front cylinders exposed the propulsive efficiency continued to increase with increasing angular setting of the variable-angle ring. It is to be noted that placing the ring with an angular setting of 0° over the front cylinders increased the propulsive efficiency slightly and caused the point of maximum efficiency to occur at a rear-ring setting of about 5°.

Further consideration of the problem of ring setting shows that the point of maximum net efficiency comes neither at the ring setting which gives minimum drag nor at the setting which gives maximum propulsive efficiency, but at some intermediate point. The results shown in figures 17 and 18 show the optimum ring settings to be about 0° for the front ring and about 5° for the rear ring. For all practical cases the optimum ring settings are apparently independent of nacelle shape.

The results of these tests show that the fore-and-aft location of the nacelle with reference to the wing has very little influence on the maximum efficiency obtainable at any given value of C_S (see reference 5 for a discussion of this coefficient), the maximum variation ranging from about 2 percent for positions above the wing to about 1 percent for positions below the wing. The vertical location of the nacelle with reference to the wing does, however, have an appreciable effect. Figures 19, 20, and 21 are plots of η and V/nD against C_S for representative nacelle locations above, below, and in the wing, respectively. Inspection of these curves reveals that the propulsive efficiency obtained with nacelle positions below the wing is somewhat higher than that obtained with positions above the wing, and that for nacelle positions in the wing the propulsive efficiency is considerably lower than that

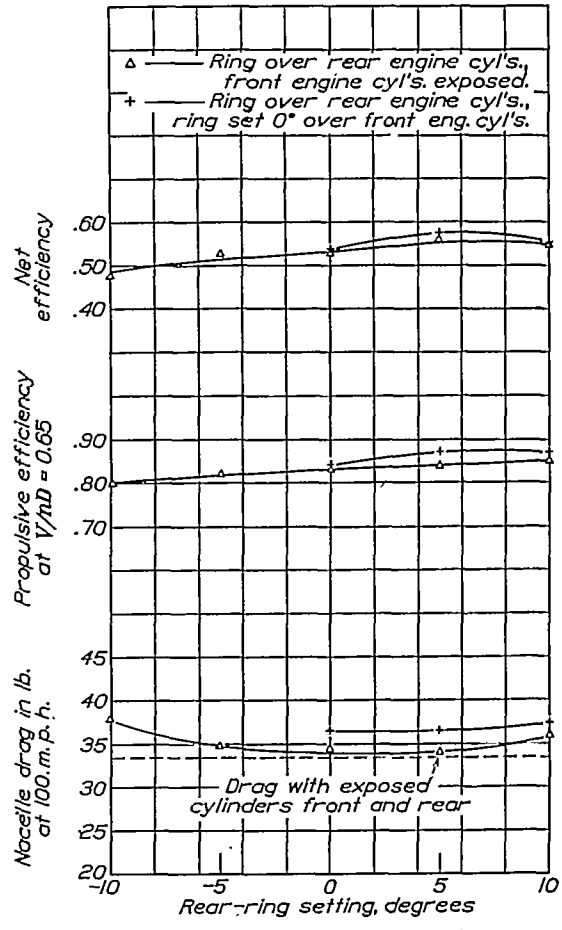

FIGURE 18.—Effect of rear-ring setting on nacelle drag, propulsive efficiency, and net efficiency. Small nacelle in position 2-B.

obtained with the nacelle located either above or below the wing.

COMPARISON OF RESULTS

As stated at the beginning of the discussion, the true merit of any wing-nacelle combination is determined by the interrelation of the lift, drag, and pro-

peller effects considered separately. The detailed discussion of the method given in reference 1 and used in the previous reports of this series results in the following equations:

$$\text{Propulsive efficiency}=\eta=\frac{(T-\Delta D)V}{P}=\frac{C_T}{C_P}\frac{V}{nD}$$

$$\text{Nacelle drag efficiency factor}=\frac{C_{D_G}-C_{D_W}}{C_P}\frac{S}{2D^2}\left(\frac{V}{nD}\right)^3$$

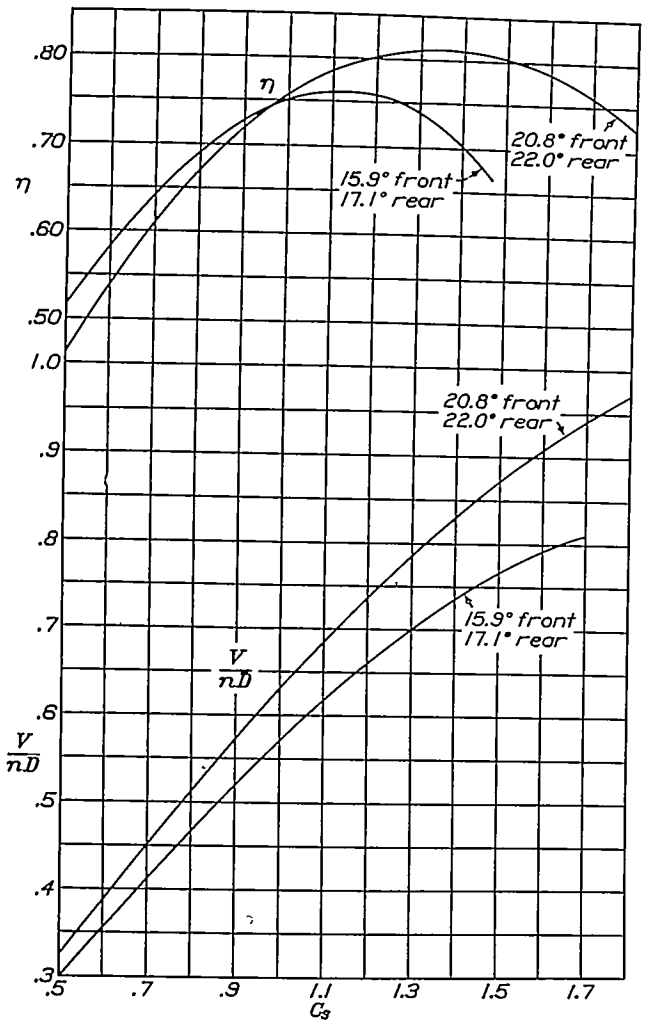

FIGURE 19.—Variation of η and V/nD with C_S for typical position above wing Tandem position 2-A. Angle of attack, 0°. Large nacelle with N.A.C.A. hood. front, ring 5° rear. Blade angle of propeller at 0.75 R.

$$\text{Net efficiency}=\text{propulsive efficiency}-\text{nacelle drag efficiency factor}=\frac{C_T}{C_P}\frac{V}{nD}-\frac{C_{D_G}-C_{D_W}}{C_P}\frac{S}{2D^2}\left(\frac{V}{nD}\right)^3$$

where C_{D_W}, drag coefficient of the wing at a given angle of attack.

C_{D_G}, drag coefficient of the wing-nacelle combination (propeller removed) at the angle of attack at which the lift coefficient with the propeller operating is the same as the lift coefficient of the wing alone at the given angle of attack.

These formulas are applied to two conditions: One for high speed and cruising with a propeller $\frac{V}{nD}=0.65$ and a lift coefficient corresponding to that of the wing alone at an angle of attack of 0° ($C_L=0.409$), and one for climbing with a $\frac{V}{nD}=0.42$ and a lift coefficient corresponding to that of the wing alone at an angle of attack of 5° ($C_L=0.652$). The $\frac{V}{nD}$ selected for the high-speed comparison is that at which the propellers operated at maximum efficiency for pitch settings from 15.8° to 17.1°. The $\frac{V}{nD}$ for climb is obtained by

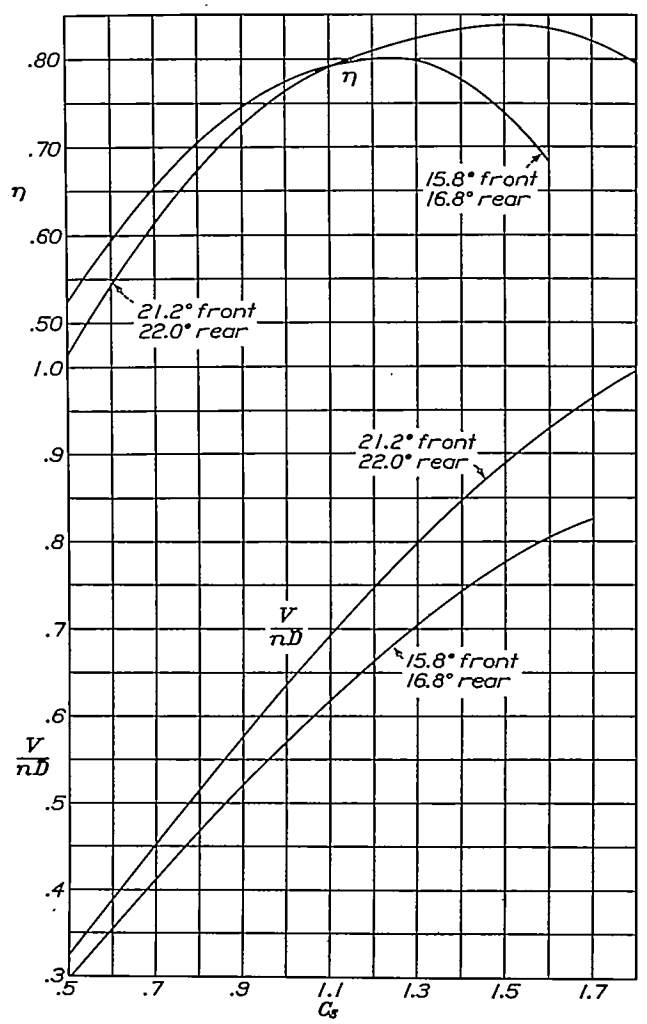

FIGURE 20.—Variation of η and V/nD with C_S for typical position below wing. Tandem position 2-B. Angle of attack, 0°. Large nacelle with N.A.C.A. hood front, ring 5° rear. Blade angle of propeller at 0.75 R.

assuming that climbing is done at 60 percent of high speed and that the torque of the engine is constant. A diagram of the method of obtaining the drag value used in computing the nacelle drag efficiency factor is given in reference 3. The foregoing values of lift coefficient and $\frac{V}{nD}$ are the same as have been used in

previous comparisons of results for the airfoil used in these tests and the net efficiencies may be directly compared.

It would perhaps be better to make comparisons at a constant value of C_s but there is no evidence that the relative order of merit would be changed and the

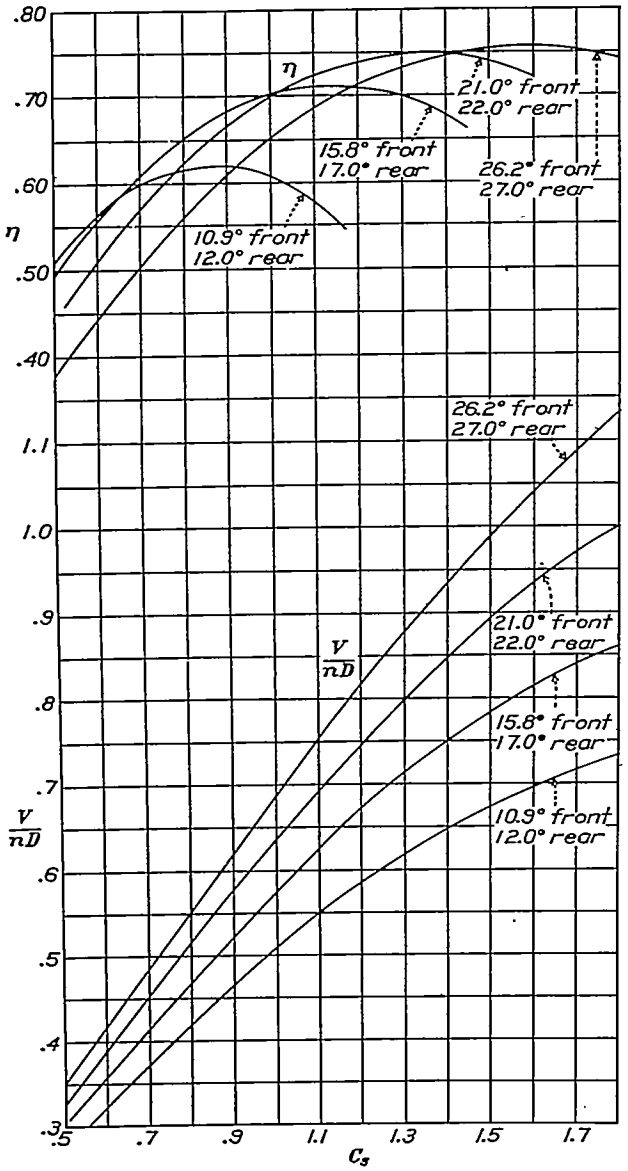

FIGURE 21.—Variation of η and V/nD with C_s for typical position in wing. Tandem position 1–C. Angle of attack, 0°. Large nacelle with N.A.C.A. hood front, ring 5° rear. Blade angle of propeller at 0.75 R.

resulting complication would not be justified. The order of merit of the various cowling and nacelle positions, which is the primary object of the analysis, is clearly indicated by the present computations. The results are given in table XII. For a few arrangements for which the data are incomplete, no net efficiencies are given. That these are generally poor, however, can be seen from the data given.

Examination of the table for the high-speed condition shows that the large nacelle with N.A.C.A. hood on front engine and variable-angle ring set 5° on the rear engine located in position 2–C gives the highest net efficiency (0.614), followed closely by the same nacelle in position 2–B (net efficiency 0.611). The net efficiency is only slightly lower for other locations of the same nacelle below the wing but falls to low values for locations above the wing. Other types of cowling show lower values in all locations. With the engine cylinders exposed the net efficiency drops to very low values (0.386 for position 2–A, small nacelle).

The propulsive efficiencies are fairly high but the nacelle drag efficiency factors are also high, which accounts for the low net efficiencies. The lowest nacelle drag efficiency factor (0.106 for position 2–C) is accompanied by a low propulsive efficiency (0.720).

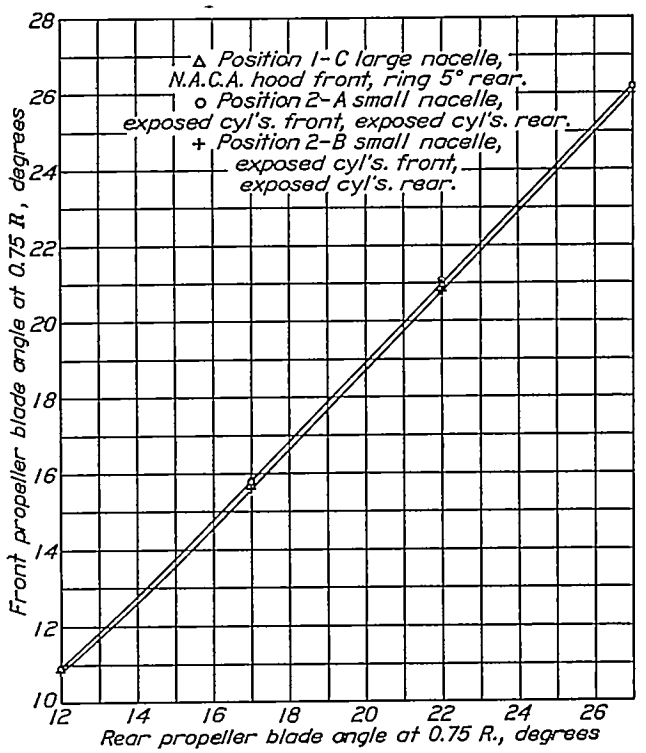

FIGURE 22.—Relation between the pitch setting of front propeller and the pitch setting of rear propeller for equal power absorbed at peak efficiency.

It appears that this arrangement would be improved by moving the front engine farther ahead of the wing, judging by the results for tractor position B of reference 1. The net efficiency for the latter is 0.752, so that the best tandem arrangement is greatly inferior to the best tractor. The cowled tractor nacelle is known to have a low drag and the general inferiority of the tandem arrangement must accordingly be charged to the high drag of the rear portion of the nacelle. In view of the satisfactory propulsive efficiencies, the study of new types of cowling or, perhaps, relocations of the rear engine should result in improved performance.

Two of the various schemes that have been advanced for improvement in the shape of tandem-propeller

nacelles are: (1) The mounting of two tractor engines in tandem, and (2) the mounting of the pusher engine forward of the tractor engine in such a manner that the two propellers face each other. Both these schemes, as well as various others that have been proposed, would undoubtedly involve serious cooling problems, and since no tests are known to have been made on them the results that might be obtained through the use of radical types of cowling are entirely problematical. It is thought, however, that there are good possibilities of discovering a nacelle cowling combination for tandem-engine nacelles that would give a lower drag than conventional arrangements.

PITCH-SETTING RATIO

In conventional tandem arrangement of engines and propellers it is generally desirable for the pitch settings of the two propellers to be such that both engines will turn at the same revolution speed at full throttle. In this series of tests the pitch of the two propellers was adjusted in each case to give equal power coefficients at the point of peak propulsive efficiency and, as it can be shown that for propellers of the same diameter, both driven by engines with equal torque characteristics,

$$\frac{\text{r.p.m. front propeller}}{\text{r.p.m. rear propeller}}=\sqrt{\frac{C_{P_{\text{rear}}}}{C_{P_{\text{front}}}}}$$

it is evident that when the power coefficients of both propellers are the same the propellers are both turning at the same revolution speed. The results of these tests indicate that no absolute ratio of pitch settings can be determined to fit all cases, because the required ratio is different for each nacelle location. Test results do indicate, however, that for any given nacelle location the pitch setting of one propeller is practically a straight-line function of the pitch setting of the other. Figure 22 shows the relation between the pitch setting of the rear propeller and the pitch setting of the front propeller for several typical cases.

DESIGN CONSIDERATIONS

There is no definite relation between engine power and engine diameter; consequently no definite ratio of nacelle drag to motor power can be established which will be generally applicable. For any given nacelle-propeller combination in which the nacelle shape and location are similar to those considered in this report the designer may, from the data presented, determine quite accurately the drag of the full-scale nacelle. The values of propulsive efficiency as obtained here should be practically the same as those that would be obtained from full-scale propeller tests and, as long as the ratio of propeller diameter to nacelle diameter is nearly the same, the values may be applied to full-scale propellers with little error.

Knowing the nacelle drag and propulsive efficiency, the designer may for his particular case determine the power available after the drag of the nacelle has been accounted for.

No data are available for determining how the slipstream lift as obtained in these tests may be applied to full-scale airplane design. The results of these tests indicate the relative effects of the propellers on the wing lift, but judgment must be used in applying those results to airplane design.

CONCLUSIONS

1. With tandem propellers the effects on net efficiency of nacelle shape and cowling are of equal importance with those of nacelle location.
2. In general, tandem-propeller-nacelle positions below the wing and positions in the wing are of about equal merit, and both are greatly superior to positions above the wing.
3. Conventional tandem arrangements of radial air-cooled engines do not give as good net efficiencies as can be obtained by the use of two tractor-propeller installations of the same general arrangement.
4. The net efficiency of a tandem-nacelle-propeller combination is not greatly affected by fore-and-aft location of the nacelle with reference to the wing.

LANGLEY MEMORIAL AERONAUTICAL LABORATORY,
NATIONAL ADVISORY COMMITTEE FOR AERONAUTICS,
LANGLEY FIELD, VA., *January 17, 1934.*

REFERENCES

1. Wood, Donald H.: Tests of Nacelle-Propeller Combination. in Various Positions with Reference to Wings. Part Is Thick Wing—N.A.C.A. Cowled Nacelle—Tractor Propeller. T.R. No. 415, N.A.C.A., 1932.
2. Wood, Donald H.: Tests of Nacelle-Propeller Combinations in Various Positions with Reference to Wings. II—Thick Wing—Various Radial-Engine Cowlings—Tractor Propeller. T.R. No. 436, N.A.C.A., 1932.
3. Wood, Donald H.: Tests of Nacelle-Propeller Combinations in Various Positions with Reference to Wings. III—Clark Y Wing—Various Radial-Engine Cowlings—Tractor Propeller. T.R. No. 462, N.A.C.A., 1933.
4. Weick, Fred E., and Wood, Donald H.: The Twenty-Foot Propeller Research Tunnel of the National Advisory Committee for Aeronautics. T.R. No. 300, N.A.C.A., 1928.
5. Weick, Fred E.: Working Charts for the Selection of Aluminum Alloy Propellers of a Standard Form to Operate with Various Aircraft Engines and Bodies. T.R. No. 350, N.A.C.A., 1930.
6. Weick, Fred E.: Full-Scale Wind Tunnel Tests with a Series of Propellers of Different Diameters on a Single Fuselage. T.R. No. 339, N.A.C.A., 1930.
7. Wood, Donald H.: Tests of Large Airfoils in the Propeller Research Tunnel, Including Two with Corrugated Surfaces. T.R. No. 336, N.A.C.A., 1929.
8. Betz, A.: Considerations on Propeller Efficiency. T.M. No. 481, N.A.C.A., 1928.

TABLE I

LIFT COEFFICIENT WITHOUT PROPELLER

$$C_L = \frac{\text{lift}}{qS}$$

Nacelle position	Type of nacelle	Engine cowling		50 m.p.h. R.N.=2,150,000				75 m.p.h. R.N.=3,220,000				100 m.p.h. R.N.=4,300,000			
		Front	Rear												
Angle of attack				−5°	0°	5°	10°	−5°	0°	5°	10°	−5°	0°	5°	10°
Wing alone				0.179	0.417	0.652	0.889	0.175	0.414	0.650	0.887	0.169	0.409	0.646	0.885
1-A	Large	N.A.C.A. hood	Ring 5°	.167	.400	.633	.868	.153	.387	.620	.856	.134	.370	.601	.840
2-A	do	do	do	.170	.383	.605	.850	.167	.383	.606	.848	.162	.385	.607	.846
	do	do	Exposed cylinders	.175	.380	.619	.854	.165	.377	.613	.848	.149	.375	.606	.840
	do	Exposed cylinders	do	.145	.384	.617	.846	.144	.378	.608	.842	.142	.370	.598	.840
	Small	do	do	.172	.395	.618	.850	.155	.380	.609	.845	.130	.363	.597	.842
	do	N.A.C.A. hood	Ring 5°	.153	.380	.618	.842	.140	.370	.608	.833	.123	.358	.588	.820
	do	Ring 0°	do	.140	.374	.605	.842	.140	.370	.602	.833	.140	.368	.598	.820
3-A	Large	N.A.C.A. hood	do	.154	.366	.610	.833	.150	.367	.610	.830	.146	.367	.610	.830
4-A	do	do	do	.166	.402	.628	.852	.148	.385	.615	.848	.124	.360	.598	.840
	do	do	Ring 0°	.155	.368	.615	.850	.154	.374	.610	.848	.153	.385	.607	.843
1-B	do	do	Ring 5°	.167	.390	.633	.863	.157	.380	.624	.848	.143	.368	.610	.830
2-B	do	do	Ring 0°	.160	.380	.607	.830	.154	.374	.604	.830	.148	.370	.600	.828
	do	do	Ring 5°	.173	.398	.613	.840	.162	.388	.606	.836	.145	.373	.598	.830
	do	do	Ring 10°	.160	.382	.618	.838	.158	.380	.610	.838	.157	.378	.598	.838
	do	do	Exposed cylinders	.178	.400	.628	.848	.165	.390	.624	.846	.150	.375	.610	.845
	do	Exposed cylinders	do	.170	.390	.620	.853	.163	.388	.615	.848	.152	.380	.607	.842
	do	Ring −5°	do	.174	.388	.625	.842	.168	.388	.620	.840	.160	.382	.608	.838
	do	Ring −10°	do	.173	.408	.613	.846	.164	.396	.605	.843	.153	.380	.590	.840
	do	Ring −15°	do	.180	.406	.615	.840	.170	.394	.610	.838	.155	.370	.605	.835
	Small	Exposed cylinders	do	.183	.398	.620	.850	.170	.395	.618	.850	.160	.392	.614	.850
	do	do	Ring 10°	.175	.403	.632	.845	.170	.395	.620	.840	.160	.390	.606	.840
	do	do	Ring 5°	.180	.403	.620	.838	.175	.396	.614	.838	.168	.388	.607	.838
	do	do	Ring 0°	.174	.400	.623	.846	.166	.395	.614	.842	.157	.390	.605	.838
	do	do	Ring −5°	.172	.400	.620	.840	.170	.397	.618	.840	.167	.390	.612	.840
	do	do	Ring −10°	.185	.400	.617	.850	.177	.400	.617	.850	.170	.400	.617	.850
	do	Ring 4°	Exposed cylinders	.190	.400	.632	.840	.170	.390	.624	.840	.168	.380	.615	.840
	do	Ring 0°	do	.187	.406	.632	.840	.180	.396	.625	.840	.178	.384	.617	.840
	do	Ring −5°	do	.177	.400	.620	.855	.170	.395	.635	.850	.164	.395	.615	.844
	do	Ring −8°	do	.190	.397	.630	.848	.175	.395	.626	.848	.158	.384	.624	.848
	do	Ring −10°	do	.194	.410	.630	.864	.184	.396	.623	.856	.170	.384	.613	.848
	do	Ring 4°	Ring 5°	.167	.395	.625	.845	.167	.393	.615	.835	.165	.390	.605	.820
	do	Ring −5°	do	.187	.404	.630	.837	.178	.384	.617	.834	.170	.383	.600	.834
	do	Ring 0°	do	.168	.385	.615	.843	.170	.388	.610	.840	.170	.390	.600	.830
	do	do	Ring 10°	.174	.400	.625	.840	.168	.392	.620	.835	.158	.382	.613	.830
	do	do	Ring 0°	.190	.400	.630	.844	.184	.395	.625	.840	.175	.390	.615	.838
3-B	Large	N.A.C.A. hood	Ring 5°	.148	.378	.605	.820	.148	.378	.595	.825	.150	.378	.585	.820
4-B	do	do	do	.153	.386	.606	.830	.148	.380	.600	.830	.140	.375	.594	.828
1-C	do	do	do	.154	.380	.616	.860	.147	.375	.610	.855	.138	.370	.605	.850
	Small	Exposed cylinders	Exposed cylinders	.158	.366	.577	.743	.158	.363	.570	.740	.158	.360	.563	.735
	do	Ring 0°	Ring 5°	.155	.357	.560	.713	.145	.355	.558	.728	.135	.353	.550	.720
2-C	Large	N.A.C.A. hood	do	.178	.404	.635	.864	.168	.395	.630	.863	.152	.385	.622	.863
3-C	do	do	do	.155	.404	.618	.848	.145	.385	.610	.840	.135	.365	.598	.834

TABLE II

DRAG COEFFICIENT WITHOUT PROPELLER

$$C_D = \frac{\text{drag}}{qS}$$

Nacelle position	Type of nacelle	Engine cowling		50 m.p.h. R.N.=2,150,000				75 m.p.h. R.N.=3,220,000				100 m.p.h. R.N.=4,300,000			
		Front	Rear												
Angle of attack				−5°	0°	5°	10°	−5°	0°	5°	10°	−5°	0°	5°	10°
Wing alone				0.0180	0.0425	0.0830	0.1440	0.0175	0.0415	0.0825	0.1440	0.0165	0.0405	0.0825	0.1440
1-A	Large	N.A.C.A. hood	Ring 5°	.0362	.0577	.0998	.1598	.0350	.0570	.0988	.1588	.0335	.0560	.0975	.1575
2-A	do	do	do	.0342	.0562	.0980	.1625	.0338	.0560	.0978	.1608	.0324	.0558	.0970	.1586
	do	do	Exposed cylinders	.0374	.0590	.0995	.1640	.0360	.0580	.0990	.1630	.0350	.0568	.0990	.1617
	do	Exposed cylinders	do	.0410	.0640	.1063	.1700	.0409	.0633	.1060	.1698	.0405	.0622	.1043	.1697
	Small	do	do	.0455	.0690	.1130	.1765	.0448	.0680	.1115	.1750	.0440	.0665	.1095	.1738
	do	N.A.C.A. hood	Ring 5°	.0415	.0655	.1140	.1770	.0412	.0655	.1133	.1762	.0408	.0650	.1125	.1747
	do	Ring 0°	do	.0455	.0690	.1153	.1780	.0440	.0678	.1140	.1770	.0420	.0658	.1128	.1760
3-A	Large	N.A.C.A. hood	do	.0340	.0578	.1020	.1635	.0338	.0570	.1010	.1620	.0330	.0560	.1000	.1603
4-A	do	do	do	.0380	.0610	.1027	.1640	.0363	.0590	.1015	.1628	.0340	.0570	.0995	.1603
	do	do	Ring 0°	.0370	.0585	.1025	.1638	.0360	.0580	.1005	.1620	.0340	.0570	.0985	.1595
1-B	do	do	Ring 5°	.0290	.0490	.0900	.1480	.0285	.0485	.0890	.1473	.0280	.0478	.0878	.1460
2-B	do	do	Ring 0°	.0305	.0510	.0905	.1482	.0300	.0498	.0900	.1470	.0300	.0480	.0895	.1455
	do	do	Ring 5°	.0295	.0495	.0902	.1478	.0290	.0485	.0890	.1430	.0280	.0475	.0878	.1440
	do	do	Ring 10°	.0310	.0495	.0890	.1465	.0300	.0485	.0880	.1430	.0285	.0475	.0875	.1450
	do	do	Exposed cylinders	.0320	.0415	.0920	.1505	.0315	.0510	.0915	.1495	.0315	.0505	.0910	.1480
	do	Exposed cylinders	do	.0380	.0560	.0960	.1530	.0375	.0558	.0950	.1520	.0365	.0548	.0935	.1500
	do	Ring −5°	do	.0385	.0555	.0950	.1540	.0380	.0545	.0940	.1530	.0366	.0535	.0930	.1515
	do	Ring −10°	do	.0370	.0540	.0940	.1530	.0355	.0535	.0935	.1510	.0340	.0530	.0930	.1485
	do	Ring −15°	do	.0365	.0555	.0960	.1530	.0360	.0550	.0950	.1520	.0350	.0540	.0935	.1505
	Small	Exposed cylinders	do	.0410	.0598	.0995	.1575	.0405	.0592	.0990	.1590	.0400	.0580	.0980	.1560
	do	do	Ring 10°	.0420	.0595	.0980	.1530	.0415	.0590	.0980	.1525	.0408	.0593	.0980	.1520
	do	do	Ring 5°	.0410	.0595	.0975	.1525	.0405	.0585	.0965	.1520	.0400	.0582	.0960	.1515
	do	do	Ring 0°	.0410	.0580	.0975	.1560	.0405	.0580	.0970	.1540	.0400	.0585	.0963	.1520
	do	do	Ring −5°	.0402	.0585	.0980	.1560	.0400	.0580	.0980	.1550	.0398	.0585	.0980	.1540
	do	do	Ring −10°	.0414	.0600	.1020	.1580	.0405	.0598	.1000	.1570	.0400	.0603	.0980	.1560
	do	Ring 4°	Exposed cylinders	.0465	.0645	.1030	.1615	.0463	.0640	.1030	.1595	.0460	.0645	.1030	.1565
	do	Ring 0°	do	.0424	.0620	.1000	.1560	.0422	.0608	.0999	.1558	.0420	.0603	.0995	.1555
	do	Ring −5°	do	.0415	.0578	.0980	.1560	.0407	.0570	.0980	.1560	.0400	.0566	.0970	.1560
	do	Ring −8°	do	.0390	.0575	.0980	.1530	.0380	.0570	.0975	.1525	.0385	.0566	.0960	.1520
	do	Ring −10°	do	.0395	.0588	.0990	.1580	.0390	.0580	.0980	.1565	.0380	.0580	.0965	.1545
	do	Ring 4°	Ring 5°	.0480	.0650	.1015	.1570	.0470	.0640	.1010	.1570	.0460	.0637	.1005	.1560
	do	Ring −5°	do	.0390	.0570	.0950	.1530	.0380	.0560	.0950	.1520	.0370	.0559	.0940	.1505
	do	Ring 0°	do	.0440	.0615	.0995	.1560	.0430	.0605	.0985	.1545	.0420	.0595	.0975	.1525
	do	do	Ring 10°	.0455	.0615	.0995	.1560	.0445	.0610	.0985	.1545	.0430	.0600	.0975	.1535
	do	do	Ring 0°	.0430	.0605	.1000	.1560	.0425	.0600	.0995	.1545	.0420	.0595	.0985	.1525
3-B	Large	N.A.C.A. hood	Ring 5°	.0325	.0495	.0875	.1460	.0320	.0495	.0875	.1450	.0310	.0490	.0880	.1440
4-B	do	do	do	.0325	.0500	.0885	.1450	.0315	.0490	.0880	.1450	.0295	.0480	.0870	.1450
1-C	do	do	do	.0295	.0488	.0895	.1500	.0285	.0480	.0890	.1490	.0270	.0460	.0880	.1480
	Small	Exposed cylinders	Exposed cylinders	.0400	.0555	.0985	.1620	.0390	.0540	.0970	.1615	.0375	.0525	.0950	.1605
	do	Ring 0°	Ring 5°	.0385	.0575	.0440	.1680	.0375	.0560	.0840	.1570	.0365	.0540	.0940	.1550
2-C	Large	N.A.C.A. hood	do	.0285	.0510	.0930	.1515	.0275	.0495	.0910	.1515	.0260	.0480	.0890	.1515
3-C	do	do	do	.0300	.0495	.0895	.1510	.0285	.0475	.0880	.1490	.0270	.0455	.0855	.1460

TABLE III

MOMENT COEFFICIENT WITHOUT PROPELLER

$$C_m = \frac{\text{moment}}{qSc}$$

Nacelle position	Type of nacelle	Engine cowling		Angle of attack				
		Front	Rear	−5°	0°	5°	10°	12°
Wing alone				−0.073	−0.067	−0.063	−0.066	−0.069
1-A	Large	N.A.C.A. hood	Ring 5°	−.067	−.063	−.063	−.072	−.072
2-A	do	do	do	−.064	−.060	−.055	−.063	−.070
	do	do	Exposed cylinders	−.061	−.059	−.058	−.063	−.064
	do	Exposed cylinders	do	−.061	−.056	−.056	−.050	−.058
	Small	do	do	−.061	−.058	−.059	−.062	−.066
	do	N.A.C.A. hood	Ring 5°	−.064	−.053	−.055	−.055	−.056
	do	Ring 0°	do	−.056	−.053	−.050	−.053	−.059
3-A	Large	N.A.C.A. hood	do	−.060	−.054	−.051	−.056	−.053
4-A	do	do	do	−.061	−.055	−.057	−.058	−.057
	do	do	Ring 0°	−.059	−.054	−.053	−.057	−.059
1-B	do	do	Ring 5°	−.067	−.063	−.064	−.071	−.070
2-B	do	do	Ring 0°	−.074	−.070	−.068	−.070	−.080
	do	do	Ring 5°	−.073	−.070	−.067	−.072	−.078
	do	do	Ring 10°	−.076	−.069	−.068	−.072	−.075
	do	do	Exposed cylinders	−.076	−.072	−.071	−.073	−.077
	do	Exposed cylinders	do	−.076	−.071	−.069	−.074	−.080
	do	Ring −5°	do	−.077	−.070	−.071	−.076	−.083
	do	Ring −10°	do	−.077	−.072	−.070	−.071	−.081
	do	Ring −15°	do	−.075	−.071	−.071	−.073	−.076
	Small	Exposed cylinders	do	−.076	−.071	−.074	−.076	−.082
	do	do	Ring 10°	−.076	−.070	−.069	−.074	−.077
	do	do	Ring 5°	−.074	−.070	−.071	−.074	−.079
	do	do	Ring 0°	−.075	−.070	−.068	−.074	−.082
	do	do	Ring −5°	−.070	−.070	−.070	−.075	−.081
	do	do	Ring −10°	−.077	−.070	−.069	−.076	−.080
	do	Ring 4°	Exposed cylinders	−.080	−.074	−.076	−.082	−.084
	do	Ring 0°	do	−.078	−.076	−.074	−.075	−.082
	do	Ring −5°	do	−.081	−.073	−.074	−.074	−.079
	do	Ring −8°	do	−.077	−.073	−.072	−.073	−.080
	do	Ring −10°	do	−.079	−.074	−.072	−.076	−.078
	do	Ring 4°	Ring 5°	−.081	−.072	−.071	−.077	−.086
	do	Ring −5°	do	−.075	−.070	−.069	−.072	−.080
	do	Ring 0°	do	−.080	−.073	−.071	−.072	−.082
	do	do	Ring 10°	−.081	−.073	−.074	−.074	−.083
	do	do	Ring 0°	−.078	−.072	−.071	−.075	−.082
3-B	Large	N.A.C.A. hood	Ring 5°	−.082	−.075	−.073	−.075	−.075
4-B	do	do	do	−.078	−.071	−.066	−.070	−.071
1-C	do	do	do	−.077	−.066	−.055	−.050	−.059
	Small	Exposed cylinders	Exposed cylinders	−.068	−.066	−.063	−.073	−.073
	do	Ring 0°	Ring 5°	−.076	−.062	−.053	−.061	−.060
2-C	Large	N.A.C.A. hood	do	−.077	−.063	−.061	−.057	−.057
3-C	do	do	do	−.085	−.073	−.070	−.064	−.069

TABLE IV

THRUST COEFFICIENT, $C_T=\frac{T-\Delta D}{\rho n_F^2 D^4}$

ANGLE OF ATTACK=−5°

Front propeller: Right hand no. 4412—4-foot diameter. Rear propeller: Left hand no. 4412—4-foot diameter

Nacelle position	Type of nacelle	Engine cowling		Propeller pitch at 0.75 R		$\frac{L}{nD}$									Propeller pitch at 0.75 R		$\frac{V}{nD}$										
		Front	Rear	Front	Rear	0.1	0.2	0.3	0.4	0.5	0.6	0.7	0.8	0.9	Front	Rear	0.1	0.2	0.3	0.4	0.5	0.6	0.7	0.8	0.9	1.0	1.1
				°	°										°	°											
1-A	Large	N.A.C.A. hood	Ring 5°	17.0	17.0	0.1588	0.1481	0.1343	0.1169	0.0973	0.0748	0.0505	0.0225	−0.0103	22.0	22.0	0.1808	0.1757	0.1632	0.1531	0.1448	0.1276	0.1065	0.0838	0.0590	0.0304	−0.0041
2-A	do	do	do	15.9	17.1	.1580	.1463	.1335	.1150	.0957	.0742	.0498	.0223	−.0098	20.8	22.0	.1830	.1770	.1687	.1578	.1432	.1254	.1048	.0820	.0573	.0292	−.0025
	do	do	Exposed cylinders	15.9	17.1	.1565	.1460	.1320	.1144	.0944	.0720	.0477	.0210	−.0087	20.8	22.0	.1819	.1772	.1697	.1598	.1453	.1260	.1043	.0808	.0561	.0280	−.0027
	do	Exposed cylinders	do	15.9	17.1	.1539	.1443	.1320	.1160	.0969	.0754	.0517	.0256	−.0043	20.8	22.0	.1820	.1755	.1670	.1557	.1412	.1238	.1045	.0833	.0604	.0352	.0100
	Small	do	do	15.7	17.0	.1515	.1598	.1254	.1087	.0904	.0695	.0467	.0300	−.0090	20.8	22.0	.1748	.1707	.1635	.1540	.1406	.1230	.1020	.0800	.0567	.0310	.0046
	do	N.A.C.A. hood	Ring 5°	15.8	16.8	.1549	.1440	.1300	.1128	.0928	.0714	.0483	.0210	−.0090													
	do	Ring 0°	do	15.8	16.8	.1559	.1449	.1310	.1140	.0951	.0750	.0521	.0263	−.0043	21.2	22.0	.1860	.1806	.1728	.1625	.1488	.1315	.1110	.0890	.0665	.0419	.0150
3-A	Large	N.A.C.A. hood	do	15.9	17.8	.1603	.1491	.1348	.1170	.0965	.0747	.0500	.0200	−.0100	20.9	22.7	.1813	.1765	.1688	.1585	.1440	.1251	.1030	.0797	.0542	.0270	−.0033
4-A	do	do	do	15.9	17.0	.1539	.1425	.1282	.1116	.0929	.0726	.0490	.0220	−.0088	21.2	22.0	.1811	.1754	.1675	.1569	.1430	.1250	.1040	.0814	.0581	.0315	.0014
	do	do	Ring 0°	15.9	17.0																						
1-B	do	do	Ring 5°	16.5	17.0	.1578	.1460	.1312	.1140	.0957	.0745	.0510	.0245	−.0085	21.8	22.0	.1835	.1785	.1706	.1600	.1458	.1280	.1069	.0847	.0612	.0320	.0006
2-B	do	do	Ring 0°	15.8	16.8																						
	do	do	Ring 5°	15.8	16.8	.1542	.1342	.1290	.1125	.0935	.0724	.0490	.0226	−.0050	21.2	22.0	.1828	.1781	.1708	.1601	.1459	.1284	.1085	.0867	.0624	.0350	.0055
	do	do	Ring 10°	15.8	16.8																						
	do	do	Exposed cylinders	15.8	16.8	.1554	.1447	.1305	.1135	.0942	.0727	.0495	.0230	−.0070	21.2	22.0	.1805	.1750	.1672	.1565	.1430	.1262	.1065	.0843	.0600	.0338	.0052
	do	Exposed cylinders	do	15.8	16.8	.1554	.1444	.1303	.1140	.0960	.0755	.0532	.0290	−.0012	21.2	22.0	.1800	.1760	.1690	.1598	.1474	.1311	.1115	.0898	.0660	.0420	.0175
	do	Ring −5°	do	15.8	16.8																						
	do	Ring −10°	do	15.8	16.8																						
	do	Ring −15°	do	15.8	16.8																						
	Small	Exposed cylinders	do	15.8	17.0	.1501	.1386	.1250	.1102	.0929	.0724	.0498	.0249	.0005	21.1	22.0	.1766	.1712	.1633	.1540	.1408	.1240	.1050	.0846	.0620	.0370	.0115
	do	do	Ring 10°	15.8	17.0																						
	do	do	Ring 5°	15.8	17.0																						
	do	do	Ring 0°	15.8	17.0																						
	do	do	Ring −5°	15.8	17.0																						
	do	do	Ring −10°	15.8	17.0																						
	do	Ring 4°	Exposed cylinders	15.8	17.0																						
	do	Ring 0°	do	15.8	17.0	.1532	.1438	.1316	.1160	.0971	.0762	.0537	.0283	.0010													
	do	Ring −5°	do	15.8	17.0	.1546	.1435	.1295	.1132	.0957	.0758	.0534	.0281	.0036	21.1	22.0	.1811	.1755	.1678	.1572	.1442	.1280	.1090	.0893	.0655	.0400	.0141
	do	Ring −8°	do	15.8	17.0	.1526	.1422	.1286	.1124	.0939	.0740	.0511	.0246	−.0040	21.1	22.0	.1777	.1718	.1638	.1535	.1405	.1243	.1060	.0844	.0610	.0360	.0100
	do	Ring −10°	do	15.8	17.0	.1532	.1422	.1285	.1120	.0941	.0743	.0510	.0251	−.0020	21.1	22.0	.1779	.1730	.1659	.1560	.1429	.1250	.1060	.0855	.0645	.0390	.0128
	do	Ring 4°	Ring 5°	15.8	17.0																						
	do	Ring −5°	do	15.8	17.0																						
	do	Ring 0°	do	15.8	17.0	.1549	.1450	.1327	.1170	.0995	.0793	.0574	.0320	.0040	21.1	22.0	.1802	.1759	.1690	.1598	.1479	.1324	.1132	.0926	.0700	.0452	.0219
	do	do	Ring 10°	15.8	17.0																						
	do	do	Ring 0°	15.8	17.0																						
3-B	Large	N.A.C.A. hood	Ring 5°	15.7	17.2	.1548	.1440	.1299	.1127	.0931	.0719	.0494	.0223	−.0070	20.8	22.0	.1814	.1744	.1662	.1551	.1408	.1202	.1027	.0808	.0566	.0299	.0033
4-B	do	do	do	16.1	17.0	.1563	.1461	.1327	.1160	.0970	.0770	.0549	.0292	.0000	21.3	22.0	.1830	.1788	.1702	.1600	.1462	.1285	.1090	.0880	.0659	.0408	.0130
1-C	do	do	do	15.8	17.0	.1498	.1388	.1252	.1093	.0919	.0726	.0519	.0289	.0024	21.0	22.0	.1763	.1705	.1626	.1522	.1390	.1220	.1031	.0830	.0608	.0368	.0123
	Small	Exposed cylinders	Exposed cylinders	14.7	15.6	.1428	.1299	.1151	.0994	.0822	.0645	.0451	.0225	−.0035	21.2	22.0	.1742	.1695	.1627	.1534	.1416	.1262	.1094	.0914	.0724	.0519	.0286
	do	Ring 0°	Ring 5°	14.7	15.6	.1418	.1298	.1157	.1003	.0840	.0663	.0471	.0257	.0003													
2-C	Large	N.A.C.A. hood	do	15.8	17.0	.1510	.1400	.1265	.1107	.0929	.0740	.0535	.0310	.0060	21.0	22.0	.1765	.1703	.1620	.1510	.1380	.1220	.1045	.0856	.0648	.0430	.0185
3-C	do	do	do	15.8	17.0	.1506	.1388	.1250	.1090	.0920	.0733	.0538	.0310	.0051	21.0	22.0	.1740	.1690	.1617	.1520	.1398	.1240	.1056	.0861	.0658	.0430	.0180

TABLE IV—Continued

THRUST COEFFICIENT, $C_T=\frac{T-\Delta D}{\rho n_P^2 D^4}$—Continued

ANGLE OF ATTACK=0°

Front propeller: Right hand no. 4412—4-foot diameter. Rear propeller: Left hand no. 4412—4-foot diameter

Nacelle position	Type of nacelle	Engine cowling		Propeller pitch at 0.75 R		$\frac{V}{nD}$									Propeller pitch at 0.75 R		$\frac{V}{nD}$										
		Front	Rear	Front	Rear	0.1	0.2	0.3	0.4	0.5	0.6	0.7	0.8	0.9	Front	Rear	0.1	0.2	0.3	0.4	0.5	0.6	0.7	0.8	0.9	1.0	1.1
				°	°										°	°											
1-A	Large	N.A.C.A. hood	Ring 5°	17.0	17.0	0.1573	0.1475	0.1325	0.1152	0.0948	0.0720	0.0469	0.0169	−0.0163	22.0	22.0	0.1835	0.1780	0.1696	0.1585	0.1440	0.1258	0.1040	0.0817	0.0560	0.0205	
2-A	do	do	do	15.9	17.1	.1576	.1468	.1324	.1148	.0941	.0717	.0467	.0178	−.0150	20.8	22.0	.1825	.1765	.1681	.1570	.1425	.1248	.1033	.0792	.0530	.0250	−0.0060
	do	do	Exposed cylinders	15.9	17.1	.1561	.1458	.1313	.1140	.0931	.0708	.0460	.0170	−.0130	20.8	22.0	.1830	.1769	.1680	.1568	.1414	.1220	.1010	.0780	.0524	.0240	−.0090
	do	Exposed cylinders	do	15.9	17.1	.1575	.1460	.1317	.1140	.0939	.0734	.0494	.0220	−.0070	20.8	22.0	.1845	.1779	.1688	.1570	.1420	.1238	.1041	.0832	.0590	.0300	−.0010
	Small	do	do	15.7	17.0	.1522	.1405	.1258	.1080	.0886	.0685	.0449	.0176	−.0100	20.8	22.0	.1744	.1690	.1610	.1507	.1370	.1203	.1004	.0776	.0521	.0245	
	do	N.A.C.A. hood	Ring 5°	15.8	16.8	.1575	.1440	.1230	.1102	.0909	.0698	.0470	.0204	−.0107													
	do	Ring 0°	do	15.8	16.8	.1582	.1465	.1320	.1150	.0959	.0748	.0508	.0231	−.0062	21.2	22.0	.1830	.1797	.1728	.1632	.1488	.1310	.1104	.0880	.0642	.0382	.0095
3-A	Large	N.A.C.A. hood	do	15.9	17.8	.1603	.1490	.1345	.1162	.0956	.0722	.0475	.0185	−.0150	20.9	22.7	.1838	.1773	.1687	.1571	.1420	.1230	.1022	.0780	.0507	.0203	−.0100
4-A	do	do	do	15.9	17.0	.1550	.1435	.1289	.1118	.0930	.0714	.0480	.0207	−.0098	21.2	22.0	.1803	.1742	.1662	.1552	.1414	.1230	.1035	.0810	.0560	.0280	−.0020
	do	do	Ring 0°	15.9	17.0	.1548	.1428	.1278	.1102	.0910	.0697	.0469	.0190	−.0123													
1-B	do	do	Ring 5°	16.5	17.0	.1589	.1473	.1331	.1169	.0986	.0781	.0548	.0291	.0011	21.8	22.0	.1838	.1785	.1712	.1612	.1481	.1320	.1120	.0903	.0668	.0399	.0090
2-B	do	do	Ring 0°	15.8	16.8	.1533	.1426	.1294	.1134	.0956	.0750	.0532	.0270	.0000													
	do	do	Ring 5°	15.8	16.8	.1560	.1450	.1317	.1150	.0959	.0750	.0536	.0285	−.0029	21.2	22.0	.1826	.1773	.1700	.1600	.1470	.1303	.1107	.0894	.0660	.0403	.0137
	do	do	Ring 10°	15.8	16.8	.1568	.1460	.1328	.1101	.0970	.0760	.0541	.0296	.0000													
	do	do	Exposed cylinders	15.8	16.8	.1553	.1435	.1292	.1125	.0940	.0742	.0523	.0275	−.0020	21.2	22.0	.1820	.1779	.1710	.1611	.1473	.1295	.1098	.0883	.0647	.0404	.0156
	do	Exposed cylinders	do	15.8	16.8	.1553	.1443	.1305	.1144	.0966	.0770	.0556	.0316	.0038	21.2	22.0	.1825	.1778	.1708	.1613	.1488	.1325	.1145	.0947	.0723	.0474	.0207
	do	Ring −5°	do	15.8	16.8	.1562	.1454	.1317	.1150	.0962	.0760	.0550	.0323	.0060													
	do	Ring −10°	do	15.8	16.8	.1550	.1439	.1298	.1134	.0950	.0752	.0530	.0293	.0017													
	do	Ring −15°	do	15.8	16.8	.1560	.1449	.1310	.1147	.0970	.0772	.0550	.0310	.0035													
	Small	Exposed cylinders	do	15.8	17.0	.1529	.1418	.1280	.1122	.0940	.0746	.0535	.0293	.0025	21.1	22.0	.1702	.1741	.1666	.1568	.1435	.1267	.1080	.0877	.0655	.0419	.0160
	do	do	Ring 10°	15.8	17.0	.1577	.1459	.1318	.1102	.0996	.0807	.0589	.0340	.0073													
	do	do	Ring 5°	15.8	17.0	.1555	.1435	.1305	.1100	.0990	.0804	.0580	.0328	.0060													
	do	do	Ring 0°	15.8	17.0	.1570	.1458	.1318	.1155	.0977	.0781	.0570	.0339	.0070													
	do	do	Ring −5°	15.8	17.0	.1545	.1440	.1308	.1144	.0965	.0770	.0555	.0320	.0057													
	do	do	Ring −10°	15.8	17.0	.1519	.1406	.1270	.1111	.0940	.0750	.0542	.0303	.0060													
	do	Ring 4°	Exposed cylinders	15.8	17.0	.1530	.1430	.1308	.1171	.1000	.0809	.0597	.0364	.0100													
	do	Ring 0°	do	15.8	17.0	.1594	.1435	.1304	.1145	.0968	.0782	.0575	.0334	.0081													
	do	Ring −5°	do	15.8	17.0	.1528	.1401	.1262	.1124	.0962	.0764	.0542	.0300	.0032	21.1	22.0	.1795	.1750	.1679	.1582	.1440	.1268	.1080	.0880	.0652	.0409	.0134
	do	Ring −8°	do	15.8	17.0	.1538	.1422	.1288	.1127	.0945	.0746	.0520	.0275	.0005	21.1	22.0	.1780	.1727	.1652	.1548	.1411	.1244	.1048	.0850	.0638	.0385	.0120
	do	Ring −10°	do	15.8	17.0	.1535	.1420	.1284	.1128	.0944	.0751	.0542	.0304	.0043	21.1	22.0	.1790	.1743	.1671	.1576	.1449	.1290	.1102	.0900	.0681	.0450	.0200
	do	Ring 4°	Ring 5°	15.8	17.0	.1584	.1471	.1344	.1194	.1026	.0841	.0632	.0397	.0150													
	do	Ring −5°	do	15.8	17.0	.1545	.1450	.1321	.1165	.0980	.0776	.0550	.0314	.0047													
	do	Ring 0°	do	15.8	17.0	.1562	.1460	.1335	.1182	.1009	.0814	.0603	.0369	.0100	21.1	22.0	.1803	.1762	.1696	.1610	.1490	.1340	.1165	.0970	.0754	.0508	.0230
	do	do	Ring 10°	15.8	17.0	.1562	.1465	.1336	.1180	.0999	.0805	.0596	.0363	.0100													
	do	do	Ring 0°	15.8	17.0	.1536	.1432	.1307	.1153	.0979	.0794	.0586	.0347	.0080													
3-B	Large	N.A.C.A. hood	Ring 5°	15.7	17.2	.1540	.1428	.1290	.1126	.0945	.0750	.0524	.0264	−.0040	20.8	22.0	.1820	.1764	.1683	.1578	.1433	.1246	.1047	.0830	.0600	.0344	.0062
4-B	do	do	do	16.1	17.0	.1559	.1448	.1310	.1152	.0978	.0770	.0554	.0300	.0020	21.3	22.0	.1798	.1748	.1675	.1580	.1452	.1281	.1078	.0864	.0638	.0394	.0120
1-C	do	do	do	15.8	17.0	.1497	.1387	.1250	.1085	.0907	.0710	.0505	.0278	.0040	21.0	22.0	.1739	.1675	.1590	.1482	.1353	.1193	.1016	.0815	.0596	.0357	.0120
	Small	Exposed cylinders	Exposed cylinders	14.7	15.6	.1429	.1295	.1142	.0978	.0797	.0610	.0409	.0190	−.0059	21.2	22.0	.1743	.1690	.1616	.1514	.1382	.1220	.1047	.0866	.0668	.0453	.0217
	do	Ring 0°	Ring 5°	14.7	15.6	.1419	.1295	.1149	.0987	.0816	.0640	.0462	.0247	.0008													
2-C	Large	N.A.C.A. hood	do	15.8	17.0	.1514	.1403	.1264	.1105	.0930	.0740	.0532	.0310	.0076	21.0	22.0	.1755	.1700	.1625	.1521	.1389	.1228	.1040	.0844	.0630	.0403	.0170
3-C	do	do	do	15.8	17.0	.1513	.1390	.1250	.1090	.0919	.0734	.0530	.0312	.0080	21.0	22.0	.1741	.1635	.1611	.1509	.1378	.1215	.1043	.0861	.0667	.0449	.0210

TABLE IV—Continued

THRUST COEFFICIENT, $C_T=\frac{T-\Delta D}{\rho n_F^2 D^4}$—Continued

ANGLE OF ATTACK=5°

Front propeller: Right hand no. 4412—4 foot diameter. Rear propeller: Left hand no. 4412—4-foot diameter

Nacelle position	Type of nacelle	Engine cowling		Propeller pitch at 0.75 R		$\frac{V}{nD}$									Propeller pitch at 0.75 R		$\frac{V}{nD}$										
		Front	Rear	Front	Rear	0.1	0.2	0.3	0.4	0.5	0.6	0.7	0.8	0.9	Front	Rear	0.1	0.2	0.3	0.4	0.5	0.6	0.7	0.8	0.9	1.0	1.1
				°	°										°	°											
1-A	Large	N.A.C.A hood	Ring 5°	17.0	17.0	0.1590	0.1480	0.1332	0.1144	0.0919	0.0680	0.0420	0.0120	−0.0216	22.0	22.0	0.1803	0.1731	0.1640	0.1518	0.1368	0.1190	0.0980	0.0750	0.0480	0.0160	
2-A	do	do	do	15.9	17.1	.1580	.1460	.1301	.1110	.0903	.0729	.0418	.0132	−.0155	20.8	22.0	.1848	.1771	.1670	.1540	.1380	.1188	.0978	.0740	.0470	.0183	−0.0115
	do	do	Exposed cylinders	15.9	17.1	.1565	.1440	.1284	.1100	.0899	.0679	.0429	.0130	−.0204	20.8	22.0	.1846	.1771	.1672	.1543	.1380	.1190	.0978	.0748	.0487	.0200	−.0099
	do	Exposed cylinders	do	15.9	17.1	.1540	.1429	.1284	.1113	.0915	.0700	.0463	.0190	−.0120	20.8	22.0	.1824	.1745	.1642	.1510	.1354	.1177	.0986	.0778	.0533	.0260	−.0057
	Small	do	do	15.7	17.0	.1496	.1381	.1285	.1059	.0863	.0648	.0400	.0120	−.0163	20.8	22.0	.1780	.1710	.1615	.1494	.1343	.1160	.0967	.0736	.0480	.0206	−.0065
	do	N.A.C.A hood	Ring 5°	15.8	16.8	.1550	.1427	.1274	.1096	.0903	.0697	.0471	.0214	−.0090													
	do	Ring 0°	do	15.8	16.8	.1562	.1442	.1295	.1125	.0939	.0730	.0488	.0210	−.0080	21.2	22.0	.1855	.1789	.1698	.1582	.1440	.1272	.1090	.0882	.0635	.0350	.0060
3-A	Large	N.A.C.A hood	do	15.9	17.8	.1590	.1440	.1272	.1090	.0900	.0680	.0428	.0130	−.0185	20.9	22.7	.1845	.1775	.1677	.1549	.1388	.1201	.0990	.0755	.0489	.0190	−.012
4-A	do	do	do	15.9	17.0	.1532	.1420	.1277	.1100	.0900	.0684	.0451	.0180	−.0129	21.2	22.0	.1818	.1751	.1664	.1549	.1400	.1214	.1008	.0781	.0538	.0200	−.003
	do	do	Ring 0°	15.9	17.0																						
1-B	do	do	Ring 5°	16.5	17.0	.1588	.1487	.1354	.1190	.1004	.0795	.0500	.0432	.0063	21.8	22.0	.1846	.1802	.1727	.1629	.1497	.1322	.1143	.0940	.0714	.0459	.0183
2-B	do	do	Ring 0°	15.8	16.8																						
	do	do	Ring 5°	15.8	16.8	.1566	.1460	.1320	.1159	.0970	.0704	.0548	.0315	.0050	21.2	22.0	.1840	.1791	.1717	.1620	.1493	.1333	.1145	.0939	.0719	.0493	.0247
	do	do	Ring 10°	15.8	16.8																						
	do	do	Exposed cylinders	15.8	16.8	.1542	.1437	.1300	.1142	.0970	.0780	.0567	.0320	.0053	21.2	22.0	.1810	.1758	.1681	.1580	.1457	.1300	.1120	.0920	.0700	.0469	.0220
	do	Exposed cylinders	do	15.8	16.8	.1559	.1448	.1314	.1155	.0976	.0784	.0577	.0351	.0100	21.2	22.0	.1827	.1780	.1710	.1615	.1487	.1327	.1146	.0951	.0744	.0519	.0280
	do	Ring −5°	do	15.8	16.8																						
	do	Ring −10°	do	15.8	16.8																						
	do	Ring −15°	do	15.8	16.8																						
	Small	Exposed cylinders	do	15.8	17.0	.1513	.1410	.1280	.1121	.0948	.0757	.0550	.0326	.0079	21.1	22.0	.1763	.1718	.1649	.1555	.1435	.1281	.1100	.0900	.0689	.0455	.0216
	do	do	Ring 10°	15.8	17.0																						
	do	do	Ring 5°	15.8	17.0																						
	do	do	Ring 0°	15.8	17.0																						
	do	do	Ring −5°	15.8	17.0																						
	do	do	Ring −10°	15.8	17.0																						
	do	Ring 4°	Exposed cylinders	15.8	17.0																						
	do	Ring 0°	do	15.8	17.0	.1519	.1420	.1300	.1150	.0978	.0793	.0589	.0371	.0130													
	do	Ring −5°	do	15.8	17.0	.1543	.1445	.1316	.1158	.0973	.0770	.0566	.0346	.0121	21.1	22.0	.1830	.1770	.1689	.1582	.1450	.1289	.1105	.0910	.0690	.0463	.0230
	do	Ring −8°	do	15.8	17.0	.1538	.1430	.1298	.1140	.0956	.0760	.0547	.0309	.0040	21.1	22.0	.1775	.1724	.1650	.1554	.1427	.1268	.1080	.0880	.0658	.0420	.0180
	do	Ring −10°	do	15.8	17.0	.1524	.1408	.1273	.1118	.0947	.0761	.0555	.0318	.0050	21.1	22.0	.1806	.1750	.1670	.1510	.1439	.1276	.1099	.0906	.0695	.0460	.0219
	do	Ring 4°	Ring 5°	15.8	17.0																						
	do	Ring −5°	do	15.8	17.0																						
	do	Ring 0°	do	15.8	17.0	.1528	.1450	.1318	.1165	.0995	.0813	.0617	.0401	.0165													
	do	do	Ring 10°	15.8	17.0																						
	do	do	Ring 0°	15.8	17.0																						
3-B	Large	N.A.C.A. hood	Ring 5°	15.7	17.2	.1532	.1430	.1300	.1139	.0950	.0740	.0545	.0322	.0096	20.8	22.0	.1817	.1734	.1646	.1542	.1421	.1265	.1074	.0873	.0658	.0426	.0186
4-B	do	do	do	16.1	17.0	.1570	.1407	.1331	.1169	.0981	.0775	.0550	.0310	.0049	21.3	22.0	.1837	.1778	.1702	.1598	.1463	.1299	.1108	.0902	.0676	.0420	.0160
1-C	do	do	do	15.8	17.0	.1490	.1305	.1218	.1042	.0855	.0670	.0475	.0260	.0006	21.0	22.0	.1720	.1650	.1555	.1440	.1301	.1145	.0970	.0794	.0581	.0360	.0130
	Small	Exposed cylinders	Exposed cylinders	14.7	15.6	.1402	.1267	.1113	.0950	.0774	.0596	.0417	.0217	.0010	21.2	22.0	.1702	.1686	.1590	.1473	.1343	.1196	.1040	.0871	.0687	.0500	.0300
	do	Ring 5°	Ring 5°	14.7	15.6	.1309	.1250	.1104	.0941	.0770	.0508	.0419	.0220	.0001													
2-C	Large	N.A.C.A. hood	do	15.8	17.0	.1500	.1382	.1242	.1080	.0904	.0712	.0515	.0207	.0065	21.0	22.0	.1760	.1695	.1607	.1490	.1350	.1185	.1000	.0802	.0584	.0360	.0130
3-C	do	do	do	15.8	17.0	.1479	.1362	.1225	.1065	.0890	.0706	.0511	.0300	.0060	21.0	22.0	.1724	.1662	.1582	.1475	.1348	.1198	.1019	.0830	.0630	.0421	.0200

TABLE V

FRONT PROPELLER POWER COEFFICIENT, $C_{P_F}=\frac{P_F}{\rho n_F^2 D^5}$

ANGLE OF ATTACK=−5°

Front propeller: Right-hand no. 4412—4-foot diameter. Rear propeller: Left-hand no. 4412—4-foot diameter

Nacelle position	Type of nacelle	Engine cowling		Propeller pitch at 0.75 R		$\frac{V}{nD}$									Propeller pitch at 0.75 R		$\frac{V}{nD}$										
		Front	Rear	Front	Rear	0.1	0.2	0.3	0.4	0.5	0.6	0.7	0.8	0.9	Front	Rear	0.1	0.2	0.3	0.4	0.5	0.6	0.7	0.8	0.9	1.0	1.1
				°	°										°	°											
1-A	Large	N.A.C.A. hood	Ring 5°	17.0	17.0	0.0413	0.0416	0.0410	0.0392	0.0363	0.0314	0.0243	0.0152	0.0035	22.0	22.0	0.0628	0.0618	0.0606	0.0590	0.0570	0.0540	0.0493	0.0426	0.0334	0.0210	0.0038
2-A	do	do	do	15.9	17.1	.0380	.0385	.0385	.0370	.0342	.0300	.0240	.0160	.0050	20.8	22.0	.0580	.0578	.0570	.0555	.0537	.0502	.0458	.0398	.0320	.0210	.0085
	do	do	Exposed cylinders	15.9	17.1	.0380	.0380	.0380	.0370	.0338	.0293	.0233	.0154	.0056	20.8	22.0	.0578	.0576	.0570	.0558	.0540	.0506	.0460	.0395	.0315	.0210	.0100
	do	Exposed cylinders	do	15.9	17.1	.0385	.0384	.0380	.0368	.0335	.0295	.0235	.0157	.0065	20.8	22.0	.0580	.0574	.0565	.0553	.0534	.0506	.0407	.0410	.0330	.0235	.0115
	Small	do	do	15.7	17.0	.0404	.0396	.0371	.0345	.0312	.0268	.0214	.0141	.0055	20.8	22.0	.0580	.0572	.0560	.0544	.0524	.0498	.0450	.0387	.0301	.0195	.0060
	do	N.A.C.A. hood	Ring 5°	15.8	16.8	.0364	.0363	.0362	.0358	.0330	.0285	.0224	.0140	.0050													
	do	Ring 0°	do	15.8	16.8	.0368	.0366	.0365	.0358	.0328	.0285	.0223	.0144	.0035	21.2	22.0	.0580	.0580	.0580	.0573	.0555	.0521	.0477	.0420	.0340	.0240	.0113
3-A	Large	N.A.C.A. hood	do	15.9	17.8	.0370	.0370	.0370	.0366	.0340	.0298	.0238	.0160	.0065	20.9	22.7	.0550	.0550	.0550	.0550	.0540	.0510	.0470	.0410	.0330	.0230	.0105
4-A	do	do	do	15.9	17.0	.0365	.0364	.0362	.0360	.0340	.0298	.0238	.0155	.0055	21.2	22.0	.0580	.0578	.0574	.0560	.0547	.0518	.0480	.0425	.0348	.0240	.0110
	do	do	Ring 0°	15.9	17.0																						
1-B	do	do	Ring 5°	16.5	17.0	.0390	.0388	.0383	.0368	.0338	.0288	.0220	.0125	.0010	21.8	22.0	.0622	.0610	.0598	.0580	.0560	.0530	.0482	.0410	.0314	.0190	.0040
2-B	do	do	Ring 0°	15.8	16.8																						
	do	do	Ring 5°	15.8	16.8	.0365	.0365	.0365	.0352	.0325	.0282	.0221	.0140	.0040	21.2	22.0	.0584	.0578	.0572	.0564	.0551	.0520	.0484	.0420	.0335	.0225	.0095
	do	do	Ring 10°	15.8	16.8																						
	do	do	Exposed cylinders	15.8	16.8	.0368	.0368	.0368	.0358	.0330	.0288	.0225	.0145	.0045	21.2	22.0	.0573	.0568	.0562	.0552	.0538	.0518	.0479	.0418	.0330	.0228	.0107
	do	Exposed cylinders	do	15.8	16.8	.0367	.0367	.0367	.0355	.0330	.0286	.0228	.0153	.0056	21.2	22.0	.0580	.0574	.0571	.0564	.0555	.0525	.0482	.0422	.0344	.0245	.0130
	do	Ring −5°	do	15.8	16.8																						
	do	Ring −10°	do	15.8	16.8																						
	do	Ring −15°	do	15.8	16.8																						
	Small	Exposed cylinders	do	15.8	17.0	.0370	.0370	.0366	.0351	.0321	.0278	.0218	.0135	.0035	21.1	22.0	.0605	.0594	.0579	.0558	.0537	.0504	.0459	.0398	.0318	.0210	.0085
	do	do	Ring 10°	15.8	17.0																						
	do	do	Ring 5°	15.8	17.0																						
	do	do	Ring 0°	15.8	17.0																						
	do	do	Ring −5°	15.8	17.0																						
	do	do	Ring −10°	15.8	17.0																						
	do	Ring 4°	Exposed cylinders	15.8	17.0																						
	do	Ring 0°	do	15.8	17.0	.0370	.0370	.0368	.0355	.0323	.0278	.0215	.0135	.0040													
	do	Ring −5°	do	15.8	17.0	.0374	.0374	.0370	.0356	.0327	.0280	.0218	.0140	.0040	21.1	22.0	.0604	.0595	.0580	.0563	.0540	.0510	.0468	.0408	.0330	.0220	.0090
	do	Ring −8°	do	15.8	17.0	.0374	.0374	.0372	.0354	.0322	.0278	.0215	.0133	.0020	21.1	22.0	.0600	.0590	.0574	.0555	.0536	.0510	.0467	.0402	.0315	.0208	.0075
	do	Ring −10°	do	15.8	17.0	.0370	.0370	.0365	.0358	.0325	.0280	.0218	.0137	.0035	21.1	22.0	.0600	.0586	.0574	.0560	.0541	.0515	.0468	.0408	.0330	.0230	.0105
	do	Ring 4°	Ring 5°	15.8	17.0																						
	do	Ring −5°	do	15.8	17.0																						
	do	Ring 0°	do	15.8	17.0	.0370	.0370	.0367	.0352	.0325	.0280	.0219	.0140	.0040	21.1	22.0	.0598	.0590	.0575	.0560	.0540	.0510	.0463	.0405	.0325	.0230	.0115
	do	do	Ring 10°	15.8	17.0																						
	do	do	Ring 0°	15.8	17.0																						
3-B	Large	N.A.C.A. hood	Ring 5°	15.7	17.2	.0363	.0363	.0360	.0352	.0324	.0278	.0220	.0145	.0045	20.8	22.0	.0540	.0540	.0540	.0540	.0527	.0503	.0458	.0398	.0316	.0206	.0080
4-B	do	do	do	16.1	17.0	.0382	.0381	.0380	.0375	.0346	.0304	.0245	.0168	.0070	21.3	22.0	.0588	.0586	.0582	.0572	.0558	.0535	.0494	.0435	.0355	.0252	.0130
1-C	do	do	do	15.8	17.0	.0366	.0365	.0364	.0361	.0335	.0300	.0247	.0175	.0085	21.0	22.0	.0565	.0565	.0565	.0564	.0552	.0525	.0486	.0433	.0362	.0265	.0150
	Small	Exposed cylinders	Exposed cylinders	14.7	15.6	.0332	.0331	.0330	.0323	.0300	.0262	.0205	.0128	.0035	21.2	22.0	.0617	.0600	.0584	.0570	.0558	.0537	.0505	.0454	.0382	.0292	.0175
	do	Ring 0°	Ring 5°	14.7	15.6	.0325	.0325	.0325	.0320	.0298	.0255	.0204	.0130	.0040													
2-C	Large	N.A.C.A. hood	do	15.8	17.0	.0365	.0365	.0365	.0365	.0347	.0310	.0260	.0187	.0095	21.0	22.0	.0575	.0574	.0572	.0565	.0555	.0534	.0497	.0444	.0372	.0280	.0170
3-C	do	do	do	15.8	17.0	.0368	.0368	.0365	.0360	.0338	.0300	.0248	.0178	.0090	21.0	22.0	.0590	.0587	.0582	.0573	.0560	.0533	.0497	.0442	.0371	.0280	.0160

TABLE V—Continued

FRONT PROPELLER POWER COEFFICIENT, $C_{P_F}=\frac{P_F}{\rho n_F^3 D^5}$—Continued

ANGLE OF ATTACK=0°

Front propeller: Right-hand no. 4412—4-foot diameter. Rear propeller: Left-hand no. 4412—4-foot diameter

Nacelle position	Type of nacelle	Engine cowling		Propeller pitch at 0.75 R.		$\frac{V}{nD}$									Propeller pitch at 0.75 R.		$\frac{V}{nD}$										
		Front	Rear	Front	Rear	0.1	0.2	0.3	0.4	0.5	0.6	0.7	0.8	0.9	Front	Rear	0.1	0.2	0.3	0.4	0.5	0.6	0.7	0.8	0.9	1.0	1.1
				°	°										°	°											
1-A	Large	N.A.C.A. hood	Ring 5°	17.0	17.0	0.0408	0.0408	0.0400	0.0383	0.0353	0.0300	0.0222	0.0120	0.0000	22.0	22.0	0.0610	0.0610	0.0602	0.0585	0.0567	0.0526	0.0476	0.0407	0.0308	0.0170	0.0000
2-A	do	do	do	15.9	17.1	.0376	.0380	.0380	.0365	.0333	.0288	.0222	.0138	.0035	20.8	22.0	.0588	.0578	.0568	.0554	.0535	.0500	.0451	.0380	.0299	.0180	.0050
	do	do	Exposed cylinders	15.9	17.1	.0375	.0375	.0375	.0365	.0332	.0285	.0223	.0140	.0035	20.8	22.0	.0582	.0578	.0570	.0556	.0535	.0502	.0455	.0390	.0305	.0184	.0040
	do	Exposed cylinders	do	15.9	17.1	.0382	.0380	.0375	.0365	.0332	.0285	.0221	.0138	.0035	20.8	22.0	.0578	.0572	.0565	.0550	.0530	.0500	.0459	.0396	.0305	.0190	.0060
	Small	do	do	15.7	17.0	.0368	.0367	.0360	.0342	.0308	.0258	.0197	.0112	.0010	20.8	22.0	.0572	.0569	.0555	.0540	.0520	.0485	.0436	.0368	.0278	.0168	.0040
	do	N.A.C.A. hood	Ring 5°	15.8	16.8	.0375	.0373	.0370	.0368	.0325	.0278	.0215	.0130	.0025													
	do	Ring 0°	do	15.8	16.8	.0368	.0368	.0368	.0358	.0325	.0278	.0215	.0132	.0020	21.2	22.0	.0592	.0586	.0583	.0575	.0556	.0522	.0470	.0402	.0310	.0205	.0070
3-A	Large	N.A.C.A. hood	do	15.9	17.8	.0372	.0372	.0372	.0368	.0338	.0294	.0230	.0145	.0035	20.9	22.7	.0546	.0546	.0546	.0544	.0532	.0505	.0465	.0400	.0315	.0215	.0075
4-A	do	do	do	15.9	17.0	.0369	.0368	.0365	.0357	.0330	.0289	.0225	.0142	.0030	21.2	22.0	.0596	.0590	.0580	.0566	.0546	.0518	.0476	.0413	.0330	.0220	.0082
	do	do	Ring 0°	15.9	17.0	.0372	.0373	.0370	.0362	.0333	.0288	.0225	.0145	.0038													
1-B	do	do	Ring 5°	16.5	17.0	.0390	.0390	.0387	.0376	.0348	.0302	.0243	.0160	.0060	21.8	22.0	.0619	.0610	.0600	.0585	.0565	.0537	.0498	.0436	.0350	.0240	.0100
2-B	do	do	Ring 0°	15.8	16.8	.0370	.0370	.0370	.0359	.0335	.0295	.0239	.0167	.0075													
	do	do	Ring 5°	15.8	16.8	.0363	.0363	.0363	.0355	.0330	.0289	.0235	.0163	.0068	21.2	22.0	.0584	.0583	.0578	.0568	.0552	.0528	.0490	.0436	.0357	.0254	.0130
	do	do	Ring 10°	15.8	16.8	.0363	.0363	.0363	.0355	.0330	.0290	.0238	.0165	.0068													
	do	do	Exposed cylinders	15.8	16.8	.0368	.0368	.0368	.0355	.0330	.0290	.0235	.0162	.0072	21.2	22.0	.0590	.0588	.0585	.0572	.0561	.0528	.0488	.0433	.0362	.0273	.0165
	do	Exposed cylinders	do	15.8	16.8	.0366	.0366	.0364	.0350	.0328	.0290	.0235	.0165	.0075	21.2	22.0	.0594	.0590	.0582	.0570	.0552	.0530	.0492	.0438	.0368	.0277	.0170
	do	Ring −5°	do	15.8	16.8	.0375	.0375	.0370	.0362	.0335	.0293	.0235	.0165	.0077													
	do	Ring −10°	do	15.8	16.8	.0370	.0370	.0370	.0357	.0333	.0295	.0240	.0165	.0075													
	do	Ring −15°	do	15.8	16.8	.0370	.0370	.0370	.0360	.0335	.0295	.0238	.0170	.0085													
	Small	Exposed cylinders	do	15.8	17.0	.0370	.0370	.0368	.0355	.0330	.0286	.0230	.0154	.0060	21.1	22.0	.0576	.0574	.0565	.0555	.0541	.0514	.0470	.0413	.0340	.0240	.0125
	do	do	Ring 10°	15.8	17.0	.0363	.0363	.0363	.0357	.0330	.0288	.0230	.0155	.0060													
	do	do	Ring 5°	15.8	17.0	.0367	.0367	.0365	.0355	.0330	.0292	.0235	.0158	.0063													
	do	do	Ring 0°	15.8	17.0	.0368	.0368	.0368	.0362	.0331	.0291	.0232	.0160	.0070													
	do	do	Ring −5°	15.8	17.0	.0395	.0390	.0380	.0360	.0330	.0287	.0230	.0158	.0075													
	do	do	Ring −10°	15.8	17.0	.0380	.0380	.0375	.0358	.0330	.0290	.0230	.0158	.0070													
	do	Ring 4°	Exposed cylinders	15.8	17.0	.0370	.0370	.0368	.0358	.0330	.0290	.0235	.0164	.0080													
	do	Ring 0°	do	15.8	17.0	.0364	.0364	.0360	.0354	.0320	.0285	.0230	.0154	.0065													
	do	Ring −5°	do	15.8	17.0	.0373	.0373	.0373	.0360	.0335	.0293	.0236	.0163	.0070	21.1	22.0	.0610	.0600	.0586	.0568	.0548	.0520	.0478	.0425	.0340	.0240	.0120
	do	Ring −8°	do	15.8	17.0	.0382	.0382	.0373	.0358	.0330	.0288	.0230	.0150	.0060	21.1	22.0	.0605	.0590	.0577	.0560	.0538	.0507	.0465	.0408	.0336	.0240	.0120
	do	Ring −10°	do	15.8	17.0	.0370	.0370	.0370	.0362	.0332	.0287	.0230	.0158	.0070	21.1	22.0	.0600	.0590	.0580	.0565	.0548	.0520	.0480	.0424	.0350	.0254	.0150
	do	Ring 4°	Ring 5°	15.8	17.0	.0372	.0370	.0366	.0360	.0330	.0290	.0234	.0162	.0078													
	do	Ring −5°	do	15.8	17.0	.0368	.0366	.0363	.0355	.0332	.0285	.0228	.0152	.0065													
	do	Ring 0°	do	15.8	17.0	.0370	.0370	.0370	.0365	.0332	.0286	.0226	.0155	.0072	21.1	22.0	.0608	.0600	.0585	.0565	.0540	.0515	.0475	.0418	.0346	.0250	.0118
	do	do	Ring 10°	15.8	17.0	.0370	.0370	.0370	.0360	.0328	.0285	.0225	.0150	.0055													
	do	do	Ring 0°	15.8	17.0	.0369	.0369	.0368	.0356	.0328	.0286	.0230	.0150	.0050													
3-B	Large	N.A.C.A. hood	Ring 5°	15.7	17.2	.0359	.0358	.0350	.0351	.0327	.0285	.0228	.0150	.0057	20.8	22.0	.0540	.0540	.0540	.0539	.0528	.0503	.0462	.0405	.0322	.0230	.0120
4-B	do	do	do	16.1	17.0	.0380	.0380	.0380	.0370	.0350	.0312	.0253	.0175	.0080	21.3	22.0	.0605	.0600	.0590	.0578	.0555	.0528	.0488	.0430	.0355	.0250	.0130
1-C	do	do	do	15.8	17.0	.0369	.0368	.0367	.0364	.0338	.0302	.0250	.0172	.0075	21.0	22.0	.0565	.0565	.0565	.0558	.0547	.0524	.0489	.0436	.0362	.0267	.0150
	Small	Exposed cylinders	Exposed cylinders	14.7	15.6	.0331	.0330	.0329	.0324	.0300	.0260	.0200	.0122	.0025	21.2	22.0	.0616	.0600	.0596	.0572	.0562	.0542	.0510	.0455	.0380	.0278	.0155
	do	Ring 0°	Ring 5°	14.7	15.6	.0325	.0325	.0325	.0320	.0294	.0253	.0203	.0124	.0025													
2-C	Large	N.A.C.A. hood	do	15.8	17.0	.0376	.0375	.0374	.0365	.0344	.0310	.0258	.0188	.0100	21.0	22.0	.0573	.0571	.0570	.0565	.0550	.0530	.0494	.0443	.0371	.0278	.0157
3-C	do	do	do	15.8	17.0	.0360	.0365	.0364	.0360	.0340	.0305	.0256	.0188	.0098	21.0	22.0	.0590	.0580	.0570	.0557	.0542	.0524	.0491	.0445	.0375	.0279	.0165

TABLE V—Continued

FRONT PROPELLER POWER COEFFICIENT, $C_{P_F}=\frac{P_F}{\rho n_F^3 D^5}$—Continued

ANGLE OF ATTACK=5°

Front propeller: Right-hand no. 4412—4-foot diameter. Rear propeller: Left-hand no. 4412—4-foot diameter

Nacelle position	Type of nacelle	Engine cowling		Propeller pitch at 0.75 R.		$\frac{V}{nD}$									Propeller pitch at 0.75 R.		$\frac{V}{nD}$										
		Front	Rear	Front	Rear	0.1	0.2	0.3	0.4	0.5	0.6	0.7	0.8	0.9	Front	Rear	0.1	0.2	0.3	0.4	0.5	0.6	0.7	0.8	0.9	1.0	1.1
				°	°										°	°											
1-A	Large	N.A.C.A. hood	Ring 5°	17.0	17.0	0.0412	0.0412	0.0406	0.0388	0.0345	0.0275	0.0202	0.0090	------	22.0	22.0	0.0620	0.0620	0.0607	0.0586	0.0557	0.0514	0.0460	0.0380	0.0260	0.0100	------
2-A	do	do	do	15.9	17.1	.0375	.0375	.0373	.0365	.0333	.0275	.0208	.0115	0.0000	20.8	22.0	.0560	.0550	.0558	.0550	.0532	.0495	.0440	.0370	.0277	.0148	------
	do	do	Exposed cylinders	15.0	17.1	.0375	.0375	.0375	.0368	.0330	.0270	.0210	.0118	.0000	20.8	22.0	.0560	.0560	.0560	.0555	.0535	.0495	.0445	.0375	.0278	.0155	0.0000
	do	Exposed cylinders	do	15.9	17.1	.0375	.0373	.0369	.0362	.0334	.0284	.0217	.0123	.0000	20.8	22.0	.0568	.0566	.0556	.0546	.0527	.0490	.0440	.0370	.0275	.0155	.0000
	Small	do	do	15.7	17.0	.0363	.0362	.0359	.0340	.0302	.0250	.0180	.0092	------	20.8	22.0	.0580	.0575	.0562	.0543	.0515	.0478	.0428	.0355	.0260	.0120	------
	do	N.A.C.A. hood	Ring 5°	15.8	16.8	.0370	.0370	.0370	.0360	.0321	.0271	.0205	.0120	.0015	------	------	------	------	------	------	------	------	------	------	------	------	------
	do	Ring 0°	do	15.8	16.8	.0370	.0370	.0368	.0355	.0321	.0270	.0200	.0110	.0000	21.2	22.0	.0580	.0575	.0570	.0560	.0550	.0512	.0470	.0396	.0300	.0177	.0042
3-A	Large	N.A.C.A. hood	do	15.0	17.8	.0370	.0370	.0370	.0356	.0330	.0280	.0215	.0130	.0020	20.9	22.7	.0573	.0572	.0570	.0560	.0545	.0513	.0459	.0392	.0300	.0190	.0065
4-A	do	do	do	15.0	17.0	.0365	.0365	.0365	.0362	.0332	.0286	.0221	.0135	.0033	21.2	22.0	.0585	.0580	.0572	.0560	.0542	.0515	.0471	.0410	.0312	.0191	.0050
	do	do	Ring 0°	15.0	17.0	------	------	------	------	------	------	------	------	------	------	------	------	------	------	------	------	------	------	------	------	------	------
1-B	do	do	Ring 5°	16.5	17.0	.0388	.0388	.0388	.0387	.0358	.0318	.0265	.0190	.0100	21.8	22.0	.0615	.0610	.0600	.0590	.0570	.0551	.0515	.0462	.0395	.0300	.0180
2-B	do	do	Ring 0°	15.8	16.8	------	------	------	------	------	------	------	------	------	------	------	------	------	------	------	------	------	------	------	------	------	------
	do	do	Ring 5°	15.8	16.8	.0370	.0370	.0370	.0355	.0335	.0298	.0248	.0180	.0007	21.2	22.0	.0590	.0590	.0580	.0578	.0560	.0538	.0504	.0457	.0387	.0300	.0190
	do	do	Ring 10°	15.8	16.8	------	------	------	------	------	------	------	------	------	------	------	------	------	------	------	------	------	------	------	------	------	------
	do	do	Exposed cylinders	15.8	16.8	.0367	.0367	.0367	.0365	.0340	.0305	.0253	.0185	.0103	21.2	22.0	.0577	.0575	.0572	.0562	.0550	.0535	.0500	.0453	.0382	.0298	.0100
	do	Exposed cylinders	do	15.8	16.8	.0370	.0370	.0370	.0365	.0340	.0303	.0255	.0187	.0105	21.2	22.0	.0590	.0585	.0578	.0568	.0558	.0536	.0497	.0448	.0380	.0300	.0195
	do	Ring −5°	do	15.8	16.8	------	------	------	------	------	------	------	------	------	------	------	------	------	------	------	------	------	------	------	------	------	------
	do	Ring −10°	do	15.8	16.8	------	------	------	------	------	------	------	------	------	------	------	------	------	------	------	------	------	------	------	------	------	------
	do	Ring −15°	do	15.8	16.8	------	------	------	------	------	------	------	------	------	------	------	------	------	------	------	------	------	------	------	------	------	------
	Small	Exposed cylinders	do	15.8	17.0	.0370	.0370	.0369	.0360	.0332	.0205	.0240	.0173	.0090	21.1	22.0	.0505	.0500	.0680	.0565	.0545	.0520	.0482	.0433	.0365	.0272	.0155
	do	do	Ring 10°	15.8	17.0	------	------	------	------	------	------	------	------	------	------	------	------	------	------	------	------	------	------	------	------	------	------
	do	do	Ring 5°	15.8	17.0	------	------	------	------	------	------	------	------	------	------	------	------	------	------	------	------	------	------	------	------	------	------
	do	do	Ring 0°	15.8	17.0	------	------	------	------	------	------	------	------	------	------	------	------	------	------	------	------	------	------	------	------	------	------
	do	do	Ring −5°	15.8	17.0	------	------	------	------	------	------	------	------	------	------	------	------	------	------	------	------	------	------	------	------	------	------
	do	do	Ring −10°	15.8	17.0	------	------	------	------	------	------	------	------	------	------	------	------	------	------	------	------	------	------	------	------	------	------
	do	Ring 4°	Exposed cylinders	15.8	17.0	------	------	------	------	------	------	------	------	------	------	------	------	------	------	------	------	------	------	------	------	------	------
	do	Ring 0°	do	15.8	17.0	.0370	.0370	.0370	.0365	.0336	.0298	.0247	.0177	.0095	------	------	------	------	------	------	------	------	------	------	------	------	------
	do	Ring −5°	do	15.8	17.0	.0375	.0375	.0370	.0360	.0336	.0298	.0248	.0182	.0100	21.1	22.0	.0590	.0590	.0580	.0570	.0548	.0523	.0484	.0434	.0363	.0276	.0175
	do	Ring −8°	do	15.8	17.0	.0380	.0380	.0380	.0368	.0339	.0298	.0243	.0173	.0090	21.1	22.0	.0610	.0600	.0585	.0568	.0543	.0520	.0485	.0433	.0360	.0272	.0168
	do	Ring −10°	do	15.8	17.0	.0368	.0367	.0364	.0357	.0335	.0298	.0243	.0170	.0068	21.1	22.0	.0612	.0604	.0592	.0580	.0550	.0525	.0490	.0443	.0375	.0285	.0175
	do	Ring 4°	Ring 5°	15.8	17.0	------	------	------	------	------	------	------	------	------	------	------	------	------	------	------	------	------	------	------	------	------	------
	do	Ring −5°	do	15.8	17.0	------	------	------	------	------	------	------	------	------	------	------	------	------	------	------	------	------	------	------	------	------	------
	do	Ring 0°	do	15.8	17.0	.0375	.0374	.0369	.0359	.0338	.0299	.0248	.0178	.0095	------	------	------	------	------	------	------	------	------	------	------	------	------
	do	do	Ring 10°	15.8	17.0	------	------	------	------	------	------	------	------	------	------	------	------	------	------	------	------	------	------	------	------	------	------
	do	do	Ring 0°	15.8	17.0	------	------	------	------	------	------	------	------	------	------	------	------	------	------	------	------	------	------	------	------	------	------
3-B	Large	N.A.C.A. hood	Ring 5°	15.7	17.2	.0358	.0358	.0358	.0354	.0330	.0290	.0237	.0165	.0073	20.8	22.0	.0640	.0540	.0540	.0540	.0533	.0510	.0471	.0415	.0347	.0258	.0136
4-B	do	do	do	16.1	17.0	.0380	.0380	.0380	.0374	.0354	.0315	.0260	.0188	.0095	21.3	22.0	.0580	.0578	.0576	.0570	.0560	.0540	.0507	.0454	.0380	.0285	.0160
1-C	do	do	do	15.8	17.0	.0365	.0365	.0364	.0358	.0335	.0295	.0243	.0170	.0080	21.0	22.0	.0568	.0568	.0567	.0560	.0552	.0530	.0490	.0435	.0365	.0265	.0150
	Small	Exposed cylinders	Exposed cylinders	14.7	15.6	.0330	.0330	.0330	.0325	.0300	.0258	.0200	.0124	.0030	21.2	22.0	.0603	.0590	.0578	.0570	.0560	.0545	.0513	.0460	.0388	.0295	.0175
	do	Ring 0°	Ring 5°	14.7	15.6	.0325	.0325	.0325	.0322	.0300	.0260	.0205	.0133	.0045	------	------	------	------	------	------	------	------	------	------	------	------	------
2-C	Large	N.A.C.A. hood	do	15.8	17.0	.0369	.0369	.0369	.0367	.0345	.0310	.0257	.0183	.0090	21.0	22.0	.0582	.0580	.0576	.0568	.0555	.0532	.0495	.0440	.0370	.0270	.0145
3-C	do	do	do	15.8	17.0	.0368	.0368	.0368	.0363	.0340	.0302	.0252	.0185	.0095	21.0	22.0	.0590	.0590	.0585	.0572	.0555	.0534	.0498	.0448	.0380	.0290	.0185

TABLE VI

REAR PROPELLER POWER COEFFICIENT, $C_{P_R}=\frac{P_R}{\rho n_R^3 D^5}$

ANGLE OF ATTACK=−5°

Front propeller: Right-hand no. 4412—4-foot diameter. Rear propeller: Left-hand no. 4412—4-foot diameter

Nacelle position	Type of nacelle	Engine cowling		Propeller pitch at 0.75 R.		$\frac{V}{nD}$									Propeller pitch at 0.75 R.		$\frac{V}{nD}$										
		Front	Rear	Front	Rear	0.1	0.2	0.3	0.4	0.5	0.6	0.7	0.8	0.9	Front	Rear	0.1	0.2	0.3	0.4	0.5	0.6	0.7	0.8	0.9	1.0	1.1
				°	°										°	°											
1-A	Large	N.A.C.A. hood	Ring 5°	17.0	17.0	0.0435	0.0414	0.0392	0.0372	0.0336	0.0290	0.0236	0.0158	0.0055	22.0	22.0	0.0652	0.0642	0.0614	0.0590	0.0561	0.0528	0.0475	0.0412	0.0331	0.0220	0.0092
2-A	do	do	do	15.9	17.1	.0421	.0408	.0389	.0370	.0332	.0281	.0224	.0143	.0040	20.8	22.0	.0632	.0612	.0595	.0574	.0545	.0513	.0464	.0397	.0305	.0197	.0066
	do	do	Exposed cylinders	15.9	17.1	.0422	.0414	.0391	.0365	.0330	.0279	.0217	.0137	.0044	20.8	22.0	.0641	.0632	.0617	.0595	.0502	.0515	.0460	.0391	.0300	.0197	.0077
	do	Exposed cylinders	do	15.9	17.1	.0421	.0408	.0386	.0361	.0331	.0284	.0223	.0146	.0058	20.8	22.0	.0632	.0622	.0603	.0587	.0543	.0507	.0458	.0391	.0310	.0205	.0095
	Small	do	do	15.7	17.0	.0363	.0362	.0358	.0345	.0314	.0270	.0205	.0125	.0030	20.8	22.0	.0600	.0593	.0580	.0559	.0536	.0492	.0444	.0384	.0302	.0195	.0077
	do	N.A.C.A. hood	Ring 5°	15.8	16.8	.0416	.0411	.0382	.0353	.0320	.0277	.0213	.0140	.0054													
	do	Ring 0°	do	15.8	16.8	.0414	.0403	.0380	.0352	.0319	.0275	.0218	.0144	.0054	21.2	22.0	.0628	.0620	.0605	.0584	.0557	.0519	.0470	.0402	.0317	.0207	.0088
3-A	Large	N.A.C.A. hood	do	15.9	17.8	.0455	.0442	.0420	.0388	.0349	.0302	.0235	.0150	.0045	20.9	22.7	.0648	.0640	.0625	.0598	.0567	.0525	.0471	.0396	.0300	.0184	.0060
4-A	do	do	do	15.9	17.0	.0408	.0403	.0388	.0360	.0330	.0291	.0230	.0155	.0069	21.2	22.0	.0629	.0617	.0600	.0578	.0553	.0520	.0479	.0413	.0325	.0215	.0080
	do	do	Ring 0°	15.0	17.0																						
1-B	do	do	Ring 5°	16.5	17.0	.0428	.0415	.0392	.0368	.0337	.0299	.0250	.0186	.0100	21.8	22.0	.0642	.0630	.0611	.0584	.0560	.0526	.0481	.0427	.0354	.0253	.0140
2-B	do	do	Ring 0°	15.8	16.8																						
	do	do	Ring 5°	15.8	16.8	.0408	.0395	.0370	.0350	.0325	.0288	.0236	.0166	.0070	21.2	22.0	.0641	.0630	.0613	.0589	.0561	.0530	.0485	.0427	.0348	.0245	.0128
	do	do	Ring 10°	15.8	16.8																						
	do	do	Exposed cylinders	15.8	16.8	.0407	.0397	.0376	.0352	.0325	.0282	.0233	.0165	.0074	21.2	22.0	.0617	.0608	.0593	.0577	.0552	.0517	.0479	.0417	.0340	.0242	.0133
	do	Exposed cylinders	do	15.8	16.8	.0410	.0400	.0384	.0352	.0325	.0288	.0242	.0170	.0078	21.2	22.0	.0622	.0624	.0608	.0586	.0555	.0520	.0478	.0423	.0353	.0265	.0160
	do	Ring −5°	do	15.8	16.8																						
	do	Ring −10°	do	15.8	16.8																						
	do	Ring −15°	do	15.8	16.8																						
	Small	Exposed cylinders	do	15.8	17.0	.0398	.0385	.0365	.0345	.0318	.0276	.0222	.0103	.0090	21.1	22.0	.0615	.0606	.0588	.0564	.0536	.0504	.0459	.0402	.0332	.0250	.0149
	do	do	Ring 10°	15.8	17.0																						
	do	do	Ring 5°	15.8	17.0																						
	do	do	Ring 0°	15.8	17.0																						
	do	do	Ring −5°	15.8	17.0																						
	do	do	Ring −10°	15.8	17.0																						
	do	Ring 4°	Exposed cylinders	15.8	17.0																						
	do	Ring 0°	do	15.8	17.0	.0405	.0397	.0379	.0350	.0326	.0287	.0233	.0173	.0090													
	do	Ring −5°	do	15.8	17.0	.0416	.0396	.0376	.0356	.0327	.0289	.0238	.0169	.0095	21.1	22.0	.0637	.0632	.0600	.0573	.0540	.0503	.0466	.0417	.0342	.0250	.0130
	do	Ring −8°	do	15.8	17.0	.0419	.0414	.0393	.0362	.0329	.0288	.0234	.0163	.0097	21.1	22.0	.0622	.0605	.0589	.0569	.0537	.0500	.0459	.0403	.0331	.0236	.0129
	do	Ring −10°	do	15.8	17.0	.0404	.0400	.0386	.0354	.0324	.0290	.0242	.0173	.0084	21.1	22.0	.0618	.0607	.0590	.0570	.0540	.0504	.0407	.0416	.0346	.0247	.0125
	do	Ring 4°	Ring 5°	15.8	17.0																						
	do	Ring −5°	do	15.8	17.0																						
	do	Ring 0°	do	15.8	17.0	.0420	.0406	.0383	.0364	.0335	.0295	.0246	.0175	.0082	21.1	22.0	.0634	.0625	.0609	.0580	.0550	.0513	.0474	.0416	.0351	.0260	.0157
	do	do	Ring 10°	15.8	17.0																						
	do	do	Ring 0°	15.8	17.0																						
3-B	Large	N.A.C.A. hood	Ring 5°	15.7	17.2	.0430	.0423	.0390	.0365	.0331	.0292	.0234	.0157	.0065	20.8	22.0	.0607	.0603	.0593	.0572	.0550	.0512	.0466	.0402	.0315	.0207	.0080
4-B	do	do	do	16.1	17.0	.0428	.0421	.0402	.0375	.0345	.0300	.0257	.0191	.0092	21.3	22.0	.0652	.0642	.0625	.0606	.0580	.0545	.0502	.0445	.0371	.0277	.0155
1-C	do	do	do	15.8	17.0	.0409	.0405	.0384	.0365	.0335	.0298	.0247	.0185	.0105	21.0	22.0	.0619	.0617	.0607	.0584	.0565	.0529	.0488	.0432	.0361	.0268	.0165
	Small	Exposed cylinders	Exposed cylinders	14.7	15.6	.0359	.0352	.0335	.0309	.0284	.0253	.0207	.0141	.0078	21.2	22.0	.0625	.0612	.0590	.0577	.0554	.0528	.0490	.0442	.0380	.0300	.0200
	do	Ring 0°	Ring 5°	14.7	15.6	.0358	.0354	.0338	.0315	.0288	.0255	.0206	.0148	.0070													
2-C	Large	N.A.C.A. hood	do	15.8	17.0	.0418	.0411	.0390	.0371	.0346	.0311	.0260	.0194	.0110	21.0	22.0	.0625	.0619	.0603	.0585	.0565	.0538	.0498	.0445	.0373	.0290	.0192
3-C	do	do	do	15.8	17.0	.0412	.0404	.0390	.0360	.0343	.0309	.0258	.0193	.0110	21.0	22.0	.0630	.0623	.0610	.0595	.0568	.0538	.0497	.0443	.0374	.0289	.0177

TABLE VI—Continued

REAR PROPELLER POWER COEFFICIENT, $C_{P_R}=\frac{P_R}{\rho n_r^3 D^5}$—Continued

ANGLE OF ATTACK=0°

Front propeller: Right-hand no. 4412—4-foot diameter. Rear propeller: Left-hand no. 4412 - 4-foot diameter

Nacelle position	Type of nacelle	Engine cowling		Propeller pitch at 0.75 R.		$\frac{V}{nD}$									Propeller pitch at 0.75 R.		$\frac{V}{nD}$										
		Front	Rear	Front	Rear	0.1	0.2	0.3	0.4	0.5	0.6	0.7	0.8	0.9	Front	Rear	0.1	0.2	0.3	0.4	0.5	0.6	0.7	0.8	0.9	1.0	1.1
				°	°										°	°											
1-A	Large	N.A.C.A. hood	Ring 5°	17.0	17.0	0.0432	0.0416	0.0396	0.0374	0.0334	0.0289	0.0226	0.0146	0.0052	22.0	22.0	0.0643	0.0629	0.0610	0.0608	0.0563	0.0524	0.0477	0.0410	0.0321	0.0214	0.0090
2-A	do	do	do	15.9	17.1	.0422	.0406	.0383	.0361	.0324	.0281	.0220	.0135	.0040	20.8	22.0	.0624	.0614	.0599	.0583	.0545	.0510	.0462	.0393	.0303	.0195	.0070
	do	do	Exposed cylinders	15.9	17.1	.0421	.0410	.0388	.0365	.0330	.0283	.0218	.0141	.0044	20.8	22.0	.0632	.0618	.0600	.0578	.0550	.0510	.0450	.0390	.0295	.0183	.0060
	do	Exposed cylinders	do	15.9	17.1	.0423	.0409	.0385	.0355	.0326	.0284	.0221	.0144	.0065	20.8	22.0	.0642	.0621	.0595	.0570	.0544	.0508	.0460	.0390	.0305	.0190	.0060
	Small	do	do	15.7	17.0	.0409	.0399	.0374	.0344	.0310	.0269	.0210	.0133	.0040	20.8	22.0	.0608	.0595	.0584	.0558	.0526	.0485	.0438	.0372	.0283	.0182	.0070
	do	N.A.C.A. hood	Ring 5°	15.8	16.8	.0415	.0410	.0385	.0351	.0317	.0272	.0211	.0130	.0046													
	do	Ring 0°	do	15.8	16.8	.0432	.0416	.0387	.0352	.0319	.0278	.0215	.0132	.0045	21.2	22.0	.0630	.0626	.0600	.0583	.0556	.0518	.0466	.0394	.0305	.0193	.0070
3-A	Large	N.A.C.A. hood	do	15.9	17.8	.0448	.0441	.0421	.0392	.0348	.0293	.0220	.0126	.0015	20.9	22.7	.0649	.0643	.0627	.0603	.0573	.0528	.0469	.0395	.0295	.0148	.0000
4-A	do	do	do	15.9	17.0	.0413	.0403	.0385	.0358	.0330	.0289	.0227	.0148	.0055	21.2	22.0	.0638	.0630	.0612	.0588	.0550	.0510	.0460	.0407	.0320	.0210	.0083
	do	do	Ring 0°	15.9	17.0	.0415	.0407	.0389	.0350	.0323	.0282	.0224	.0141	.0052													
1-B	do	do	Ring 5°	16.5	17.0	.0424	.0413	.0393	.0368	.0330	.0303	.0249	.0181	.0090	21.8	22.0	.0635	.0626	.0612	.0595	.0570	.0537	.0490	.0437	.0368	.0264	.0135
2-B	do	do	Ring 0°	15.8	16.8	.0404	.0397	.0377	.0356	.0324	.0286	.0237	.0170	.0083													
	do	do	Ring 5°	15.8	16.8	.0411	.0403	.0384	.0360	.0325	.0285	.0235	.0165	.0082	21.2	22.0	.0631	.0618	.0603	.0584	.0558	.0527	.0488	.0431	.0351	.0255	.0151
	do	do	Ring 10°	15.8	16.8	.0412	.0402	.0381	.0355	.0325	.0280	.0235	.0160	.0084													
	do	do	Exposed cylinders	15.8	16.8	.0409	.0395	.0370	.0350	.0325	.0286	.0235	.0166	.0078	21.2	22.0	.0630	.0624	.0611	.0596	.0561	.0524	.0476	.0422	.0351	.0261	.0157
	do	Exposed cylinders	do	15.8	16.8	.0406	.0393	.0373	.0347	.0322	.0281	.0235	.0172	.0084	21.2	22.0	.0643	.0631	.0608	.0583	.0551	.0515	.0478	.0430	.0364	.0278	.0170
	do	Ring −5°	do	15.8	16.8	.0417	.0403	.0381	.0352	.0320	.0283	.0235	.0169	.0092													
	do	Ring −10°	do	15.8	16.8	.0409	.0393	.0370	.0348	.0319	.0288	.0235	.0170	.0083													
	do	Ring −15°	do	15.8	16.8	.0410	.0396	.0375	.0350	.0325	.0288	.0240	.0168	.0089													
	Small	Exposed cylinders	do	15.8	17.0	.0402	.0392	.0371	.0349	.0314	.0278	.0227	.0166	.0095	21.1	22.0	.0619	.0610	.0596	.0570	.0540	.0505	.0466	.0413	.0340	.0253	.0145
	do	do	Ring 10°	15.8	17.0	.0407	.0402	.0385	.0359	.0330	.0295	.0248	.0185	.0108													
	do	do	Ring 5°	15.8	17.0	.0409	.0400	.0383	.0359	.0332	.0296	.0245	.0177	.0094													
	do	do	Ring 0°	15.8	17.0	.0412	.0401	.0382	.0355	.0326	.0288	.0243	.0180	.0101													
	do	do	Ring −5°	15.8	17.0	.0416	.0405	.0386	.0361	.0329	.0289	.0238	.0178	.0101													
	do	do	Ring −10°	15.8	17.0	.0420	.0405	.0383	.0356	.0325	.0288	.0242	.0181	.0106													
	do	Ring 4°	Exposed cylinders	15.8	17.0	.0406	.0397	.0381	.0362	.0325	.0291	.0247	.0186	.0106													
	do	Ring 0°	do	15.8	17.0	.0412	.0403	.0386	.0356	.0327	.0287	.0235	.0173	.0093													
	do	Ring −5°	do	15.8	17.0	.0407	.0394	.0374	.0357	.0327	.0289	.0241	.0173	.0098	21.1	22.0	.0630	.0620	.0600	.0574	.0542	.0500	.0467	.0415	.0340	.0240	.0140
	do	Ring −8°	do	15.8	17.0	.0418	.0402	.0381	.0360	.0329	.0288	.0232	.0170	.0080	21.1	22.0	.0615	.0613	.0591	.0569	.0540	.0503	.0457	.0402	.0331	.0240	.0138
	do	Ring −10°	do	15.8	17.0	.0408	.0399	.0377	.0352	.0325	.0285	.0241	.0180	.0097	21.1	22.0	.0628	.0613	.0594	.0573	.0544	.0511	.0470	.0413	.0340	.0254	.0134
	do	Ring 4°	Ring 5°	15.8	17.0	.0420	.0411	.0394	.0364	.0337	.0301	.0254	.0193	.0118													
	do	Ring −5°	do	15.8	17.0	.0413	.0404	.0386	.0361	.0331	.0296	.0242	.0174	.0091													
	do	Ring 0°	do	15.8	17.0	.0416	.0408	.0390	.0359	.0331	.0293	.0247	.0180	.0097	21.1	22.0	.0637	.0619	.0600	.0576	.0553	.0520	.0480	.0420	.0356	.0268	.0153
	do	do	Ring 10°	15.8	17.0	.0424	.0418	.0400	.0370	.0333	.0291	.0246	.0183	.0104													
	do	do	Ring 0°	15.8	17.0	.0408	.0402	.0386	.0358	.0335	.0297	.0240	.0183	.0100													
3-B	Large	N.A.C.A. hood	Ring 5°	15.7	17.2	.0421	.0413	.0394	.0369	.0335	.0295	.0242	.0172	.0071	20.8	22.0	.0620	.0620	.0610	.0586	.0560	.0518	.0473	.0404	.0314	.0217	.0113
4-B	do	do	do	16.1	17.0	.0419	.0410	.0390	.0370	.0341	.0304	.0254	.0185	.0090	21.3	22.0	.0645	.0628	.0612	.0590	.0567	.0531	.0484	.0429	.0352	.0256	.0150
1-C	do	do	do	15.8	17.0	.0411	.0406	.0389	.0364	.0338	.0302	.0250	.0188	.0105	21.0	22.0	.0610	.0607	.0593	.0580	.0561	.0529	.0489	.0437	.0366	.0272	.0163
	Small	Exposed cylinders	Exposed cylinders	14.7	15.6	.0360	.0352	.0334	.0308	.0283	.0245	.0200	.0143	.0063	21.2	22.0	.0621	.0611	.0599	.0581	.0558	.0530	.0496	.0447	.0378	.0284	.0180
	do	Ring 0°	Ring 5°	14.7	15.6	.0365	.0357	.0339	.0315	.0287	.0254	.0204	.0153	.0095													
2-C	Large	N.A.C.A. hood	do	15.8	17.0	.0422	.0410	.0391	.0369	.0344	.0310	.0261	.0202	.0125	21.0	22.0	.0607	.0606	.0595	.0580	.0562	.0533	.0494	.0443	.0371	.0279	.0170
3-C	do	do	do	15.8	17.0	.0418	.0410	.0392	.0367	.0341	.0305	.0256	.0196	.0122	21.0	22.0	.0618	.0608	.0593	.0576	.0557	.0529	.0492	.0447	.0381	.0280	.0170

TABLE VI—Continued

REAR PROPELLER POWER COEFFICIENT, $C_{P_R}=\frac{P_R}{\rho n_P^2 D^5}$—Continued

ANGLE OF ATTACK=5°

Front propeller: Right-hand no. 4412—4-foot diameter. Rear propeller: Left-hand no. 4412—4-foot diameter

Nacelle position	Type of nacelle	Engine cowling		Propeller pitch at 0.75 R.		$\frac{V}{nD}$									Propeller pitch at 0.75 R.		$\frac{V}{nD}$										
		Front	Rear	Front	Rear	0.1	0.2	0.3	0.4	0.5	0.6	0.7	0.8	0.9	Front	Rear	0.1	0.2	0.3	0.4	0.5	0.6	0.7	0.8	0.9	1.0	1.1
				°	°										°	°											
1-A	Large	N.A.C.A. hood	Ring 5°	17.0	17.0	0.0433	0.0416	0.0416	0.0391	0.0366	0.0335	0.0299	0.0220	0.0149	22.0	22.0	0.0652	0.0630	0.0611	0.0586	0.0558	0.0520	0.0471	0.0409	0.0312	0.0185	------
2-A	do	do	do	15.9	17.1	.0435	.0420	.0396	.0364	.0332	.0283	.0220	.0141	.0040	20.8	22.0	.0630	.0611	.0600	.0576	.0546	.0509	.0455	.0380	.0293	.0162	------
	do	do	Exposed cylinders	15.9	17.1	.0425	.0414	.0394	.0363	.0330	.0282	.0219	.0132	.0029	20.8	22.0	.0637	.0630	.0608	.0582	.0550	.0509	.0457	.0385	.0288	.0163	0.0022
	do	Exposed cylinders	do	15.9	17.1	.0415	.0410	.0392	.0356	.0320	.0278	.0222	.0142	.0040	20.8	22.0	.0636	.0617	.0603	.0574	.0541	.0500	.0450	.0388	.0298	.0180	.0061
	Small	do	do	15.7	17.0	.0403	.0391	.0369	.0344	.0303	.0262	.0204	.0129	.0045	20.8	22.0	.0615	.0608	.0584	.0560	.0523	.0481	.0432	.0375	.0284	.0183	------
	do	N.A.C.A. hood	Ring 5°	15.8	16.8	.0408	.0399	.0381	.0352	.0319	.0274	.0215	.0140	.0052	------	------	------	------	------	------	------	------	------	------	------	------	------
	do	Ring 0°	do	15.8	16.8	.0415	.0403	.0383	.0359	.0319	.0272	.0213	.0137	.0047	21.2	22.0	.0635	.0630	.0617	.0592	.0562	.0521	.0464	.0397	.0310	.0195	.0066
3-A	Large	N.A.C.A. hood	do	15.9	17.8	.0446	.0435	.0407	.0370	.0341	.0285	.0211	.0113	−.0010	20.9	22.7	.0652	.0646	.0630	.0612	.0577	.0525	.0463	.0378	.0275	.0158	.0030
4-A	do	do	do	15.9	17.0	.0415	.0407	.0390	.0358	.0327	.0282	.0223	.0148	.0053	21.2	22.0	.0635	.0627	.0612	.0588	.0560	.0520	.0471	.0402	.0312	.0192	.0059
	do	do	Ring 0°	15.9	17.0	------	------	------	------	------	------	------	------	------	------	------	------	------	------	------	------	------	------	------	------	------	------
1-B	do	do	Ring 5°	16.5	17.0	.0427	.0420	.0402	.0373	.0338	.0301	.0252	.0192	.0112	21.8	22.0	.0640	.0628	.0613	.0592	.0570	.0532	.0492	.0438	.0359	.0261	.0150
2-B	do	do	Ring 0°	15.8	16.8	------	------	------	------	------	------	------	------	------	------	------	------	------	------	------	------	------	------	------	------	------	------
	do	do	Ring 5°	15.8	16.8	.0412	.0400	.0380	.0361	.0326	.0289	.0242	.0174	.0096	21.2	22.0	.0633	.0620	.0604	.0584	.0566	.0537	.0500	.0445	.0383	.0279	.0166
	do	do	Ring 10°	15.8	16.8	------	------	------	------	------	------	------	------	------	------	------	------	------	------	------	------	------	------	------	------	------	------
	do	do	Exposed cylinders	15.8	16.8	.0408	.0399	.0382	.0355	.0330	.0295	.0240	.0168	.0087	21.2	22.0	.0623	.0613	.0598	.0581	.0560	.0525	.0487	.0431	.0357	.0260	.0149
	do	Exposed cylinders	do	15.8	16.8	.0410	.0400	.0380	.0355	.0326	.0287	.0237	.0178	.0100	21.2	22.0	.0624	.0618	.0606	.0587	.0557	.0524	.0489	.0436	.0361	.0276	.0187
	do	Ring −5°	do	15.8	16.8	------	------	------	------	------	------	------	------	------	------	------	------	------	------	------	------	------	------	------	------	------	------
	do	Ring −10°	do	15.8	16.8	------	------	------	------	------	------	------	------	------	------	------	------	------	------	------	------	------	------	------	------	------	------
	do	Ring −15°	do	15.8	16.8	------	------	------	------	------	------	------	------	------	------	------	------	------	------	------	------	------	------	------	------	------	------
	Small	Exposed cylinders	do	15.8	17.0	.0405	.0395	.0379	.0351	.0319	.0283	.0232	.0167	.0090	21.1	22.0	.0617	.0615	.0599	.0577	.0545	.0509	.0473	.0420	.0352	.0263	.0150
	do	do	Ring 10°	15.8	17.0	------	------	------	------	------	------	------	------	------	------	------	------	------	------	------	------	------	------	------	------	------	------
	do	do	Ring 5°	15.8	17.0	------	------	------	------	------	------	------	------	------	------	------	------	------	------	------	------	------	------	------	------	------	------
	do	do	Ring 0°	15.8	17.0	------	------	------	------	------	------	------	------	------	------	------	------	------	------	------	------	------	------	------	------	------	------
	do	do	Ring −5°	15.8	17.0	------	------	------	------	------	------	------	------	------	------	------	------	------	------	------	------	------	------	------	------	------	------
	do	do	Ring −10°	15.8	17.0	------	------	------	------	------	------	------	------	------	------	------	------	------	------	------	------	------	------	------	------	------	------
	do	Ring 4°	Exposed cylinders	15.8	17.0	------	------	------	------	------	------	------	------	------	------	------	------	------	------	------	------	------	------	------	------	------	------
	do	Ring 0°	do	15.8	17.0	.0415	.0407	.0386	.0355	.0329	.0292	.0243	.0180	.0100	------	------	------	------	------	------	------	------	------	------	------	------	------
	do	Ring −5°	do	15.8	17.0	.0414	.0403	.0389	.0364	.0330	.0292	.0244	.0183	.0110	21.1	22.0	.0620	.0618	.0602	.0577	.0547	.0508	.0469	.0414	.0340	.0250	.0155
	do	Ring −8°	do	15.8	17.0	.0420	.0406	.0385	.0362	.0328	.0292	.0242	.0183	.0097	21.1	22.0	.0619	.0610	.0595	.0571	0543	.0505	.0465	.0415	.0340	.0248	.0150
	do	Ring −10°	do	15.8	17.0	.0403	.0390	.0380	.0354	.0324	.0292	.0242	.0178	.0098	21.1	22.0	.0631	.0615	.0593	.0569	.0549	.0515	.0480	.0423	.0355	.0267	.0155
	do	Ring 4°	Ring 5°	15.8	17.0	------	------	------	------	------	------	------	------	------	------	------	------	------	------	------	------	------	------	------	------	------	------
	do	Ring −5°	do	15.8	17.0	------	------	------	------	------	------	------	------	------	------	------	------	------	------	------	------	------	------	------	------	------	------
	do	Ring 0°	do	15.8	17.0	.0421	.0410	.0391	.0368	.0337	.0298	.0252	.019.	0115	------	------	------	------	------	------	------	------	------	------	------	------	------
	do	do	Ring 10°	15.8	17.0	------	------	------	------	------	------	------	------	------	------	------	------	------	------	------	------	------	------	------	------	------	------
	do	do	Ring 0°	15.8	17.0	------	------	------	------	------	------	------	------	------	------	------	------	------	------	------	------	------	------	------	------	------	------
3-B	Large	N.A.C.A. hood	Ring 5°	15.7	17.2	.0412	.0409	.0395	.0370	.0338	.0298	.0247	.0183	.0093	20.8	22.0	.0628	.0620	.0605	.0588	.0503	.0523	.0471	.0415	.0340	.0250	.0136
4-B	do	do	do	16.1	17.0	.0434	.0426	.0408	.0384	.0348	.0305	.0255	.0189	.0102	21.3	22.0	.0648	.0635	.0617	.0598	.0570	.0540	.0507	.0454	.0370	.0267	.0150
1-C	do	do	do	15.8	17.0	.0413	.0407	.0391	.0371	.0339	.0300	.0249	.0190	.0110	21.0	22.0	.0613	.0615	.0610	.0599	.0573	.0540	.0500	.0446	.0374	.0285	.0175
	Small	Exposed cylinders	Exposed cylinders	14.7	15.6	.0358	.0352	.0336	.0312	.0239	.0255	.0213	.0158	0103	21.2	22.0	.0619	.0607	.0593	.0577	.0558	.0530	.0500	.0459	.0401	.0325	.0228
	do	Ring 0°	Ring 5°	14.7	15.0	.0364	.0357	.0343	.0319	.0295	.0270	.0225	.0166	.0098	------	------	------	------	------	------	------	------	------	------	------	------	------
2-C	Large	N.A.C.A hood	do	15.8	17.0	.0422	.0419	.0401	.0377	.0350	.0311	.0265	.0205	.0119	21.0	22.0	.0636	.0628	.0614	.0595	.0570	.0542	.0502	.0449	.0375	.0280	.0167
3-C	do	do	do	15.8	17.0	.0408	.0394	.0389	.0367	.0340	.0303	.0258	.0195	.0117	21.0	22.0	.0618	.0610	.0601	.0590	.0570	.0538	.0498	.0448	.0381	.0297	.0194

TABLE VII

PROPULSIVE EFFICIENCY, $\eta = \frac{(T-\Delta D)V}{P}$

ANGLE OF ATTACK=−5°

Front propeller: Right-hand no. 4412—4-foot diameter. Rear propeller: Left-hand no. 4412—4-foot diameter

Nacelle position	Type of nacelle	Engine cowling		Propeller pitch at 0.75 R.		$\frac{V}{nD}$									Propeller pitch at 0.75 R.		$\frac{V}{nD}$										
		Front	Rear	Front	Rear	0.1	0.2	0.3	0.4	0.5	0.6	0.7	0.8	0.9	Front	Rear	0.1	0.2	0.3	0.4	0.5	0.6	0.7	0.8	0.9	1.0	1.1
				°	°										°	°											
1-A	Large	N.A.C.A. hood	Ring 5°	17.0	17.0	0.187	0.357	0.502	0.612	0.690	0.743	0.738	0.581		22.0	22.0	0.141	0.281	0.414	0.536	0.640	0.717	0.770	0.800	0.798	0.707	
2-A	do	do	do	15.9	17.1	.197	.370	.517	.621	.711	.766	.750	.589		20.8	22.0	.151	.297	.434	.550	.662	.741	.795	.826	.825	.718	
	do	do	Exposed cylinders	15.9	17.1	.195	.369	.513	.622	.708	.756	.741	.577		20.8	22.0	.149	.293	.429	.554	.650	.740	.793	.822	.821	.688	
	do	Exposed cylinders	do	15.9	17.1	.192	.364	.516	.636	.727	781	.790	.676		20.8	22.0	.151	.294	.429	.552	.656	.734	.790	.832	.850	.800	0.524
	Small	do	do	15.7	17.0	.197	.370	.516	.630	.722	.775	.780	.602		20.8	22.0	.148	.293	.430	.558	603	.745	.798	.831	.847	.795	.370
	do	N.A.C.A. hood	Ring 5°	15.8	16.8	.198	.372	.520	.635	.714	.761	.773	.600														
	do	Ring 0°	do	15.8	16.8	.190	.377	.527	.642	.735	.803	.827	.731		21.2	22.0	.154	.301	.437	.561	.668	.757	.821	.865	.910	.937	.820
3-A	Large	N.A.C.A. hood	do	15.9	17.8	.194	.368	.511	.620	.700	.747	.740	.540		20.0	22.7	.151	.297	.431	.552	.650	.726	.767	.791	.774	.652	
4-A	do	do	do	15.9	17.0	.199	.372	.513	.620	.693	.730	.732	.568		21.2	22.0	.150	.293	.428	.548	.650	.722	.759	.777	.777	.693	.081
	do	do	Ring 0°	15.9	17.0																						
1-B	do	do	Ring 5°	16.5	17.0	.193	.364	.508	.620	.709	.762	.759	.631		21.8	22.0	.145	.288	.423	.547	.651	.727	.777	.810	.824	.723	.049
2-B	do	do	Ring 0°	15.8	16.8																						
	do	do	Ring 5°	15.8	16.8	.200	.377	.526	.641	.720	.762	.750	.591		21.2	22.0	.149	.295	.432	.555	.655	.730	.785	.819	.822	.745	.271
	do	do	Ring 10°	15.8	16.8																						
	do	do	Exposed cylinders	15.8	16.8	.201	.378	.526	.639	.719	.765	.757	.594		21.2	22.0	.152	.298	.434	.554	.650	.730	.778	.808	.806	.720	.240
	do	Exposed cylinders	do	15.8	16.8	.200	.377	.526	.645	.739	.795	.804	.720		21.2	22.0	.150	.294	.430	.556	.673	.751	.813	.850	.852	.824	.064
	do	Ring −5°	do	15.8	16.8																						
	do	Ring −10°	do	15.8	16.8																						
	do	Ring −15°	do	15.8	16.8																						
	Small	Exposed cylinders	do	15.8	17.0	.195	.367	.513	.631	.727	.784	.794	.638		21.1	22.0	.145	.285	.421	.540	.656	.738	.800	.846	.858	.804	.541
	do	do	Ring 10°	15.8	17.0																						
	do	do	Ring 5°	15.8	17.0																						
	do	do	Ring 0°	15.8	17.0																						
	do	do	Ring −5°	15.8	17.0																						
	do	do	Ring −10°	15.8	17.0																						
	do	Ring 4°	Exposed cylinders	15.8	17.0																						
	do	Ring 0°	do	15.8	17.0	.198	.375	.529	.653	.749	.809	.822	.744														
	do	Ring −5°	do	15.8	17.0	.193	.373	.520	.610	.732	.799	820	.728		21.1	22.0	.146	.288	.427	.554	.667	.758	.823	.865	.878	.850	.738
	do	Ring −8°	do	15.8	17.0	.193	.361	.501	.627	.721	.785	.797	.636		21.1	22.0	.146	.288	.423	.546	.656	.738	.802	.839	.849	.810	.540
	do	Ring −10°	do	15.8	17.0	.198	.367	.514	.629	.726	.783	.776	.648		21.1	22.0	.147	.280	.428	.552	.661	.736	.794	.830	.845	.818	.612
	do	Ring 4°	Ring 5°	15.8	17.0																						
	do	Ring −5°	do	15.8	17.0																						
	do	Ring 0°	do	15.8	17.0	.19	.371	.530	.614	.760	.825	.834	.810		21.1	22.0	.147	.290	.429	.560	.679	.777	.846	.902	.931	.943	.886
	do	do	Ring 10°	15.8	17.0																						
	do	do	Ring 0°	15.8	17.0																						
3-B	Large	N.A.C.A. hood	Ring 5°	15.7	17.2	.195	.367	.513	.628	.710	.758	.762	.591		20.8	22.0	.158	.305	.440	.560	.654	.728	.777	.808	.808	.724	.227
4-B	do	do	do	16.1	17.0	.193	.364	.509	.618	.702	.758	.765	.651		21.3	22.0	.148	.289	.423	.543	.642	.714	.766	.800	.816	.772	.502
1-C	do	do	do	15.8	17.0	.193	.360	.498	.602	.684	.729	.735	.642		21.0	22.0	.149	.289	.417	.530	.622	.695	.740	.768	.757	.690	.430
	Small	Exposed cylinders	Exposed cylinders	14.7	15.6	.207	.330	.519	.629	.704	.751	.766	.639		21.2	22.0	.140	.280	.414	.535	.637	.711	.769	.817	.855	.870	.839
	do	Ring 0°	Ring 5°	14.7	15.6	.208	.332	.524	.632	.717	.780	.804	.740														
2-C	Large	N.A.C.A. hood	do	15.8	17.0	.193	.361	.499	.602	.670	.715	.720	.651		21.0	22.0	.147	.286	.414	.525	.616	.683	.735	.770	.783	.754	.562
3-C	do	do	do	15.8	17.0	.193	.360	.498	.601	.680	.722	.744	.668		21.0	22.0	.143	.279	.407	.520	.619	.695	.743	.779	.794	.755	.586

TABLE VII—Continued

PROPULSIVE EFFICIENCY, $\eta=\frac{(T-\Delta D)V}{P}$—Continued

ANGLE OF ATTACK=0°

Front propeller: Right-hand no. 4412—4-foot diameter. Rear propeller: Left-hand no. 4412—4-foot diameter

Nacelle position	Type of nacelle	Engine cowling		Propeller pitch at 0.75 R.		$\frac{V}{nD}$									Propeller pitch at 0.75 R.		$\frac{V}{nD}$										
		Front	Rear	Front	Rear	0.1	0.2	0.3	0.4	0.5	0.6	0.7	0.8	0.9	Front	Rear	0.1	0.2	0.3	0.4	0.5	0.6	0.7	0.8	0.9	1.0	1.1
				°	°										°	°											
1-A	Large	N.A.C.A. hood	Ring 5°	17.0	17.0	0.187	0.358	0.499	0.608	0.690	0.734	0.733	0.508		22.0	22.0	0.147	0.287	0.418	0.536	0.637	0.719	0.765	0.800	0.800	0.090	
2-A	do	do	do	15.9	17.1	.197	.374	.520	.632	.716	.760	.740	.522		20.8	22.0	.151	.296	.432	.556	.660	.710	.792	.813	.793	.067	
	do	do	Exposed cylinders	15.9	17.1	.196	.371	.517	.624	.704	.749	.730	.484		20.8	22.0	.151	.295	.430	.554	.651	.724	.774	.800	.786	.654	
	do	Exposed cylinders	do	15.9	17.1	.196	.370	.520	.633	.713	.774	.783	.624		20.8	22.0	.151	.298	.437	.561	.662	.736	.792	.840	.871	.790	
	Small	do	do	15.7	17.0	.190	.367	.514	.630	.716	.780	.772	.574		20.8	22.0	.148	.290	.425	.549	.655	.744	.804	.839	.836	.700	
	do	N.A.C.A. hood	Ring 5°	15.8	16.8	.199	.368	.508	.622	.708	.761	.772	.607														
	do	Ring 0°	do	15.8	16.8	.198	.374	.524	.648	.744	.807	.826	.700		21.2	22.0	.150	.297	.436	.563	.669	.755	.825	.884	.939	.962	0.747
3-A	Large	N.A.C.A hood	do	15.9	17.8	.195	.367	.509	.611	.697	.739	.740	.546		20.9	22.7	.154	.298	.432	.548	.643	.716	.766	.785	.748	.560	
4-A	do	do	do	15.9	17.0	.198	.372	.516	.625	.705	.742	.743	.571		21.2	22.0	.146	.285	.418	.538	.641	.717	.766	.791	.776	.052	
	do	do	Ring 0°	15.9	17.0	.187	.366	.505	.612	.693	.735	.731	.532														
1-B	do	do	Ring 5°	16.5	17.0	.195	.367	.512	.628	.718	.774	.780	.684		21.8	22.0	.147	.289	.424	.546	.652	.736	.794	.828	.837	.702	.421
2-B	do	do	Ring 0°	15.8	16.8	.198	.372	.520	.630	.726	.781	.783	.662														
	do	do	Ring 5°	15.8	16.8	.201	.378	.529	.641	.731	.786	.799	.695		21.2	22.0	.150	.295	.432	.556	.662	.741	.793	.825	.839	.791	.536
	do	do	Ring 10°	15.8	16.8	.202	.382	.534	.654	.740	.791	.800	.710														
	do	do	Exposed cylinders	15.8	16.8	.200	.376	.524	.638	.719	.773	.779	.671		21.2	22.0	.140	.294	.429	.552	.656	.738	.797	.820	.817	.756	.533
	do	Exposed cylinders	do	15.8	16.8	.200	.380	.530	.650	.744	.809	.829	.750		21.2	22.0	.147	.291	.431	.560	.674	.761	.820	.872	.889	.854	.670
	do	Ring −5°	do	15.8	16.8	.197	.374	.526	.644	.735	.792	.820	.774														
	do	Ring −10°	do	15.8	16.8	.199	.377	.526	.644	.729	.781	.781	.700														
	do	Ring −15°	do	15.8	16.8	.200	.378	.527	.646	.734	.795	.813	.734														
	Small	Exposed cylinders	do	15.8	17.0	.198	.372	.518	.638	.729	.794	.819	.733		21.1	22.0	.150	.294	.431	.556	.664	.747	.808	.850	.868	.850	.677
	do	do	Ring 10°	15.8	17.0	.205	.381	.528	.649	.754	.830	.862	.800														
	do	do	Ring 5°	15.8	17.0	.200	.374	.522	.650	.748	.820	.846	.794														
	do	do	Ring 0°	15.8	17.0	.201	.379	.527	.645	.744	.810	.840	.798														
	do	do	Ring −5°	15.8	17.0	.191	.361	.512	.635	.732	.802	.830	.762														
	do	do	Ring −10°	15.8	17.0	.190	.358	.502	.628	.717	.779	.804	.715														
	do	Ring 4°	Exposed cylinders	15.8	17.0	.197	.373	.522	.651	.764	.836	.867	.832														
	do	Ring 0°	do	15.8	17.0	.205	.374	.524	.645	.741	.820	.865	.817														
	do	Ring −5°	do	15.8	17.0	.195	.366	.506	.626	.726	.787	.795	.714		21.1	22.0	.145	.287	.425	.554	.660	.741	.800	.840	.863	.850	.567
	do	Ring −8°	do	15.8	17.0	.191	.363	.512	.628	.717	.778	.788	.685		21.1	22.0	.146	.287	.424	.549	.654	.738	.795	.840	.860	.803	.512
	do	Ring −10°	do	15.8	17.0	.197	.370	.512	.630	.718	.788	.806	.720		21.1	22.0	.146	.290	.429	.554	.664	.751	.812	.860	.888	.886	.774
	do	Ring 4°	Ring 5°	15.8	17.0	.200	.377	.530	.660	.769	.854	.907	.895														
	do	Ring −5°	do	15.8	17.0	.198	.377	.529	.651	.730	.801	.819	.770														
	do	Ring 0°	do	15.8	17.0	.199	.376	.527	.653	.761	.843	.892	.882		21.1	22.0	.145	.289	.430	.564	.682	.777	.854	.920	.907	.980	.934
	do	do	Ring 10°	15.8	17.0	.196	.372	.521	.643	.756	.839	.885	.872														
	do	do	Ring 0°	15.8	17.0	.198	.371	.521	.640	.741	.817	.862	.835														
3-B	Large	N.A.C.A. hood	Ring 5°	15.7	17.2	.198	.370	.510	.626	.716	.776	.780	.650		20.8	22.0	.150	.302	.440	.560	.659	.733	.784	.821	.849	.770	.316
4-B	do	do	do	16.1	17.0	.195	.367	.510	.622	.708	.750	.765	.667		21.3	22.0	.143	.284	.418	.541	.647	.726	.777	.804	.812	.770	.472
1-C	do	do	do	15.8	17.0	.192	.358	.496	.596	.670	.706	.707	.618		21.0	22.0	.148	.286	.412	.520	.610	.681	.727	.747	.737	.662	.422
	Small	Exposed cylinders	Exposed cylinders	14.7	15.6	.206	.380	.517	.619	.685	.724	.716	.573		21.2	22.0	.141	.279	.409	.525	.617	.683	.729	.768	.793	.806	.713
	do	Ring 0°	Ring 5°	14.7	15.6	.205	.379	.519	.621	.703	.757	.796	.720														
2-C	Large	N.A.C.A. hood	do	15.8	17.0	.190	.357	.495	.602	.676	.710	.715	.636		21.0	22.0	.149	.289	.419	.531	.624	.694	.736	.762	.764	.723	.572
3-C	do	do	do	15.8	17.0	.193	.359	.496	.600	.674	.721	.720	.651		21.0	22.0	.144	.284	.415	.531	.627	.693	.743	.772	.794	.803	.689

TABLE VII—Continued

PROPULSIVE EFFICIENCY, $\eta=\frac{(T-\Delta D)V}{P}$—Continued

ANGLE OF ATTACK=5°

Front propeller: Right hand no. 4412—4-foot diameter. Rear propeller: Left hand no. 4412—4-foot diameter

Nacelle position	Type of nacelle	Engine cowling		Propeller pitch at 0.75 R.		$\frac{V}{nD}$									Propeller pitch at 0.75 R.		$\frac{V}{nD}$										
		Front	Rear	Front	Rear	0.1	0.2	0.3	0.4	0.5	0.6	0.7	0.8	0.9	Front	Rear	0.1	0.2	0.3	0.4	0.5	0.6	0.7	0.8	0.9	1.0	1.1
				°	°										°	°											
1-A	Large	N.A.C.A. hood	Ring 5°	17.0	17.0	0.188	0.357	0.501	0.605	0.675	0.711	0.687	0.402		22.0	22.0	0.141	0.277	0.404	0.517	0.614	0.690	0.756	0.760	0.755	0.560	
2-A	do	do	do	15.9	17.1	.195	.367	.508	.609	.690	.729	.682	.413		20.8	22.0	.155	.301	.433	.548	.640	.710	.765	.790	.742	.590	
	do	do	Exposed cylinders	15.9	17.1	.190	.365	.500	.602	.681	.724	.700	.416		20.8	22.0	.154	.298	.420	.541	.636	.712	.769	.787	.776	.630	
	do	Exposed cylinders	do	15.9	17.1	.195	.364	.500	.620	.609	.748	.738	.574		20.8	22.0	.152	.295	.425	.538	.634	.714	.776	.820	.837	.777	
	Small	do	do	15.7	17.0	.195	.367	.508	.619	.708	.760	.730	.434		20.8	22.0	.149	.280	.422	.542	.640	.726	.787	.808	.791	.072	
	do	N.A.C.A. hood	Ring 5°	15.8	16.8	.199	.371	.508	.616	.705	.766	.785	.659														
	do	Ring 0°	do	15.8	16.8	.199	.374	.517	.630	.734	.808	.820	.680		21.2	22.0	.153	.297	.429	.546	.648	.739	.817	.890	.938	.942	0.611
3-A	Large	N.A.C.A. hood	do	15.9	17.8	.195	.358	.491	.593	.671	.722	.704	.428		20.9	22.7	.151	.292	.419	.529	.620	.694	.752	.784	.765	.546	
4-A	do	do	do	15.9	17.0	.197	.368	.508	.611	.683	.724	.711	.509		21.2	22.0	.149	.290	.422	.540	.635	.703	.750	.770	.775	.680	
	do	do	Ring 0°	15.9	17.0																						
1-B	do	do	Ring 5°	16.5	17.0	.195	.368	.514	.620	.721	.771	.779	.717		21.8	22.0	.147	.291	.428	.551	.657	.732	.765	.830	.852	.818	.610
2-B	do	do	Ring 0°	15.8	16.8																						
	do	do	Ring 5°	15.8	16.8	.200	.379	.528	.648	.733	.780	.783	.712		21.2	22.0	.151	.296	.433	.558	.663	.744	.798	.833	.851	.851	.763
	do	do	Ring 10°	15.8	16.8																						
	do	do	Exposed cylinders	15.8	16.8	.199	.375	.520	.634	.724	.782	.804	.725		21.2	22.0	.151	.296	.431	.553	.656	.736	.794	.833	.853	.840	.714
	do	Exposed cylinders	do	15.8	16.8	.200	.376	.524	.642	.733	.798	.821	.770		21.2	22.0	.151	.296	.434	.560	.666	.751	.814	.861	.894	.902	.806
	do	Ring −5°	do	15.8	16.8																						
	do	Ring −10°	do	15.8	16.8																						
	do	Ring −15°	do	15.8	16.8																						
	Small	Exposed cylinders	do	15.8	17.0	.195	.368	.513	.630	.728	.786	.816	.767		21.1	22.0	.146	.285	.419	.545	.650	.747	.806	.844	.865	.850	.780
	do	do	Ring 10°	15.8	17.0																						
	do	do	Ring 5°	15.8	17.0																						
	do	do	Ring 0°	15.8	17.0																						
	do	do	Ring −5°	15.8	17.0																						
	do	do	Ring −10°	15.8	17.0																						
	do	Ring 4°	Exposed cylinders	15.8	17.0																						
	do	Ring 0°	do	15.8	17.0	.193	.365	.510	.639	.735	.808	.841	.830														
	do	Ring −5°	do	15.8	17.0	.198	.372	.520	.640	.730	.783	.806	.760		21.1	22.0	.151	.293	.429	.552	.662	.750	.811	.868	.891	.880	.767
	do	Ring −8°	do	15.8	17.0	.192	.361	.509	.625	.715	.773	.788	.700		21.1	22.0	.145	.285	.420	.546	.657	.742	.796	.831	.846	.808	.626
	do	Ring −10°	do	15.8	17.0	.193	.367	.513	.629	.718	.775	.802	.731		21.1	22.0	.145	.287	.421	.546	.654	.736	.793	.836	.857	.833	.730
	do	Ring 4°	Ring 5°	15.8	17.0																						
	do	Ring −5°	do	15.8	17.0																						
	do	Ring 0°	do	15.8	17.0	.195	.370	.520	.642	.742	.817	.864	.866		21.1	22.0											
	do	do	Ring 10°	15.8	17.0																						
	do	do	Ring 0°	15.8	17.0																						
3-B	Large	N.A.C.A. hood	Ring 5°	15.7	17.2	.199	.373	.518	.630	.710	.763	.789	.741		20.8	22.0	.156	.299	.431	.548	.648	.735	.799	.842	.862	.839	.753
4-B	do	do	do	16.1	17.0	.193	.364	.506	.617	.698	.750	.747	.658		21.3	22.0	.150	.293	.428	.547	.647	.721	.765	.796	.811	.761	.568
1-C	do	do	do	15.8	17.0	.192	.353	.484	.571	.634	.676	.676	.578		21.0	22.0	.146	.279	.396	.497	.578	.642	.690	.712	.708	.654	.440
	Small	Exposed cylinders	Exposed cylinders	14.7	15.6	.204	.373	.501	.597	.657	.695	.706	.615		21.2	22.0	.144	.282	.407	.514	.600	.667	.719	.758	.784	.807	.819
	do	Ring 0°	Ring 5°	14.7	15.6	.203	.369	.495	.587	.647	.677	.682	.589														
2-C	Large	N.A.C.A. hood	do	15.8	17.0	.190	.351	.484	.580	.650	.689	.691	.612		21.0	22.0	.145	.280	.405	.514	.600	.662	.702	.722	.705	.654	.458
3-C	do	do	do	15.8	17.0	.191	.353	.485	.584	.654	.700	.701	.632		21.0	22.0	.143	.277	.400	.508	.599	.671	.716	.741	.745	.717	.580

TABLE VIII

PROPELLER OPERATING COEFFICIENT, $C_S = \sqrt[5]{\frac{\rho V^5}{P n_r^3}}$

ANGLE OF ATTACK=—5°

Front propeller: Right-hand no. 4412—4-foot diameter. Rear propeller: Left-hand no. 4412—4-foot diameter

Nacelle position	Type of nacelle	Engine cowling		Propeller pitch at 0.75 R.		$\frac{V}{nD}$									Propeller pitch at 0.75 R.		$\frac{V}{nD}$										
		Front	Rear	Front	Rear	0.1	0.2	0.3	0.4	0.5	0.6	0.7	0.8	0.9	Front	Rear	0.1	0.2	0.3	0.4	0.5	0.6	0.7	0.8	0.9	1.0	1.1
				°	°										°	°											
1-A	Large	N.A.C.A. hood	Ring 5°	17.0	17.0	0.164	0.330	0.497	0.668	0.852	1.050	1.286	1.603	2.300	22.0	22.0	0.151	0.303	0.457	0.614	0.774	0.940	1.114	1.313	1.546	1.880	2.620
2-A	do	do	do	15.9	17.1	.166	.332	.502	.674	.858	1.060	1.294	1.610	2.305	20.8	22.0	.152	.306	.462	.620	.780	.948	1.126	1.332	1.570	1.900	2.545
	do	do	Exposed cylinders	15.9	17.1	.166	.332	.501	.675	.860	1.063	1.300	1.623	2.260	20.8	22.0	.152	.305	.460	.617	.778	.948	1.130	1.330	1.575	1.900	2.465
	do	Exposed cylinders	do	15.9	17.1	.166	.333	.502	.677	.859	1.063	1.298	1.610	2.165	20.8	22.0	.153	.306	.461	.620	.782	.950	1.125	1.330	1.560	1.870	2.380
	Small	do	do	15.7	17.0	.166	.335	.508	.684	.872	1.080	1.323	1.650	2.340	20.8	22.0	.154	.308	.464	.622	.784	.955	1.135	1.354	1.577	1.913	2.590
	do	N.A.C.A. hood	Ring 5°	15.8	16.8	.167	.334	.505	.670	.865	1.070	1.310	1.632	2.243													
	do	Ring 0°	do	15.8	16.8	.167	.334	.505	.680	.866	1.070	1.305	1.626	2.310	21.2	22.0	.153	.306	.460	.617	.777	.943	1.120	1.320	1.550	1.862	2.400
3-A	Large	N.A.C.A. hood	do	15.9	17.8	.167	.331	.499	.672	.854	1.055	1.290	1.600	2.220	20.9	22.7	.153	.307	.461	.618	.777	.945	1.125	1.326	1.566	1.800	2.510
4-A	do	do	do	15.9	17.0	.167	.335	.504	.670	.857	1.058	1.292	1.600	2.170	21.2	22.0	.152	.306	.461	.618	.778	.944	1.120	1.318	1.541	1.853	2.423
	do	do	Ring 0°	15.9	17.0																						
1-B	do	do	Ring 5°	16.5	17.0	.165	.332	.501	.675	.859	1.060	1.290	1.606	2.217	21.8	22.0	.151	.304	.457	.615	.775	.941	1.120	1.316	1.544	1.864	2.450
2-B	do	do	Ring 0°	15.8	16.8																						
	do	do	Ring 5°	15.8	16.8	.167	.335	.507	.680	.864	1.064	1.300	1.608	2.220	21.2	22.0	.152	.305	.461	.616	.777	.941	1.114	1.313	1.538	1.850	2.140
	do	do	Ring 10°	15.8	16.8																						
	do	do	Exposed cylinders	15.8	16.8	.167	.334	.504	.680	.862	1.066	1.298	1.605	2.145	21.2	22.0	.153	.308	.463	.620	.780	.940	1.122	1.315	1.540	1.845	2.320
	do	Exposed cylinders	do	15.8	16.8	.167	.334	.505	.680	.864	1.065	1.295	1.589	2.135	21.2	22.0	.153	.306	.460	.617	.778	.944	1.120	1.315	1.534	1.810	2.230
	do	Ring −5°	do	15.8	16.8																						
	do	Ring −10°	do	15.8	16.8																						
	do	Ring −15°	do	15.8	16.8																						
	Small	Exposed cylinders	do	15.8	17.0	.167	.335	.500	.681	.868	1.073	1.309	1.614	2.160	21.1	22.0	.152	.306	.462	.620	.781	.950	1.130	1.328	1.555	1.854	2.330
	do	do	Ring 10°	15.8	17.0																						
	do	do	Ring 5°	15.8	17.0																						
	do	do	Ring 0°	15.8	17.0																						
	do	do	Ring −5°	15.8	17.0																						
	do	do	Ring −10°	15.8	17.0																						
	do	Ring 4°	Exposed cylinders	15.8	17.0																						
	do	Ring 0°	do	15.8	17.0	.167	.335	.505	.680	.864	1.070	1.298	1.605	2.140													
	do	Ring −5°	do	15.8	17.0	.166	.334	.505	.678	.862	1.065	1.300	1.604	2.125	21.1	22.0	.152	.304	.460	.619	.781	.950	1.125	1.318	1.545	1.935	2.380
	do	Ring −8°	do	15.8	17.0	.166	.333	.502	.678	.864	1.068	1.302	1.613	2.195	21.1	22.0	.152	.311	.462	.620	.781	.952	1.125	1.325	1.557	1.865	2.390
	do	Ring −10°	do	15.8	17.0	.167	.334	.504	.678	.864	1.066	1.295	1.603	2.180	21.1	22.0	.152	.306	.462	.620	.782	.948	1.124	1.319	1.544	1.829	2.340
	do	Ring 4°	Ring 5°	15.8	17.0																						
	do	Ring −5°	do	15.8	17.0																						
	do	Ring 0°	do	15.8	17.0	.166	.334	.504	.679	.862	1.064	1.295	1.600	2.170	21.1	22.0	.152	.304	.459	.619	.781	.957	1.126	1.319	1.542	1.829	2.260
	do	do	Ring 10°	15.8	17.0																						
	do	do	Ring 0°	15.8	17.0																						
3-B	Large	N.A.C.A. hood	Ring 5°	15.7	17.2	.166	.333	.503	.658	.862	1.065	1.298	1.610	2.210	20.8	22.0	.154	.308	.464	.621	.784	.950	1.125	1.323	1.562	1.890	2.510
4-B	do	do	do	16.1	17.0	.165	.331	.500	.673	.854	1.050	1.270	1.565	2.050	21.3	22.0	.152	.304	.458	.614	.774	.938	1.110	1.300	1.520	1.800	2.230
1-C	do	do	do	15.8	17.0	.167	.334	.504	.676	.857	1.055	1.278	1.555	1.990	21.0	22.0	.153	.307	.462	.618	.775	.940	1.115	1.308	1.522	1.800	2.195
	Small	Exposed cylinders	Exposed cylinders	14.7	15.6	.171	.342	.516	.690	.885	1.086	1.328	1.618	2.200	21.2	22.0	.152	.305	.461	.618	.777	.939	1.112	1.298	1.509	1.760	2.120
	do	Ring 0°	Ring 5°	14.7	15.6	.171	.343	.516	.695	.883	1.068	1.326	1.635	2.220													
2-C	Large	N.A.C.A. hood	do	15.8	17.0	.167	.334	.502	.675	.853	1.048	1.205	1.538	1.955	21.0	22.0	.153	.300	.461	.618	.775	.939	1.112	1.298	1.512	1.775	2.137
3-C	do	do	do	15.8	17.0	.166	.334	.503	.675	.856	1.050	1.270	1.542	1.963	21.0	22.0	.152	.305	.459	.614	.775	.940	1.112	1.300	1.512	1.775	2.165

TABLE VIII—Continued

PROPELLER OPERATING COEFFICIENT, $C_S=\sqrt[5]{\frac{\rho V^5}{P n_p^2}}$—Continued

ANGLE OF ATTACK=0°

Front propeller: Right hand no. 4412—4-foot diameter. Rear propeller: Left hand no. 4412—4-foot diameter

Nacelle position	Type of nacelle	Engine cowling		Propeller pitch at 0.75 R.		$\frac{V}{nD}$									Propeller pitch at 0.75 R.		$\frac{V}{nD}$										
		Front	Rear	Front	Rear	0.1	0.2	0.3	0.4	0.5	0.6	0.7	0.8	0.9	Front	Rear	0.1	0.2	0.3	0.4	0.5	0.6	0.7	0.8	0.9	1.0	1.1
				°	°										°	°											
1-A	Large	N.A.C.A. hood	Ring 5°	17.0	17.0	0.164	0.330	0.498	0.671	0.855	1.058	1.302	1.650	2.580	22.0	22.0	0.152	0.304	0.457	0.614	0.775	0.943	1.121	1.320	1.505	1.920	
2-A	do	do	do	15.9	17.1	.166	.334	.503	.676	.862	1.063	1.300	1.640	2.390	20.8	22.0	.152	.306	.462	.620	.780	.950	1.130	1.332	1.575	1.925	
	do	do	Exposed cylinders	15.9	17.1	.166	.333	.502	.676	.861	1.065	1.305	1.633	2.305	20.8	22.0	.152	.306	.461	.620	.780	.950	1.130	1.334	1.609	1.930	2.760
	do	Exposed cylinders	do	15.9	17.1	.166	.334	.504	.678	.862	1.065	1.308	1.630	2.260	20.8	22.0	.152	.306	.462	.621	.782	.950	1.128	1.330	1.575	1.920	3.660
	Small	do	do	15.7	17.0	.167	.334	.506	.684	.872	1.083	1.318	1.678	2.760	20.8	22.0	.153	.307	.464	.622	.785	.958	1.143	1.347	1.600	1.960	
	do	N.A.C.A. hood	Ring 5°	15.8	16.8	.166	.334	.503	.680	.867	1.073	1.318	1.650	2.420													
	do	Ring 0°	do	15.8	16.8	.166	.333	.503	.680	.865	1.070	1.312	1.652	2.463	21.2	22.0	.152	.306	.460	.617	.777	.944	1.125	1.330	1.575	1.905	2.580
3-A	Large	N.A.C.A. hood	do	15.9	17.8	.165	.331	.499	.670	.855	1.060	1.300	1.645	2.590	20.9	22.7	.153	.306	.461	.617	.775	.946	1.124	1.324	1.576	1.940	2.920
4-A	do	do	do	15.9	17.0	.167	.334	.504	.678	.860	1.063	1.300	1.620	2.340	21.2	22.0	.152	.305	.459	.617	.778	.943	1.122	1.320	1.555	1.875	
	do	do	Ring 0°	15.9	17.0	.166	.334	.504	.670	.862	1.065	1.304	1.628	2.305													
1-B	do	do	Ring 5°	16.5	17.0	.165	.331	.500	.673	.850	1.051	1.280	1.573	2.080	21.8	22.0	.152	.304	.458	.614	.774	.938	1.112	1.304	1.520	1.819	2.335
2-B	do	do	Ring 0°	15.8	16.8	.167	.334	.504	.678	.863	1.061	1.286	1.574	2.060													
	do	do	Ring 5°	15.8	16.8	.167	.334	.505	.678	.862	1.065	1.292	1.586	2.080	21.2	22.0	.152	.306	.461	.617	.778	.940	1.118	1.305	1.530	1.812	2.340
	do	do	Ring 10°	15.8	16.8	.167	.335	.501	.680	.862	1.064	1.292	1.580	2.080													
	do	do	Exposed cylinders	15.8	16.8	.167	.335	.505	.681	.862	1.062	1.292	1.533	2.080	21.2	22.0	.153	.305	.459	.614	.775	.944	1.118	1.308	1.524	1.800	2.182
	do	Exposed cylinders	do	15.8	16.8	.167	.335	.506	.680	.864	1.065	1.291	1.575	2.060	21.2	22.0	.152	.304	.460	.617	.778	.943	1.116	1.308	1.518	1.782	2.160
	do	Ring −5°	do	15.8	16.8	.166	.334	.504	.678	.862	1.063	1.293	1.580	2.038													
	do	Ring −10°	do	15.8	16.8	.167	.335	.506	.680	.865	1.062	1.285	1.578	2.060													
	do	Ring −15°	do	15.8	16.8	.167	.335	.504	.679	.860	1.060	1.287	1.573	2.020													
	Small	Exposed cylinders	do	15.8	17.0	.167	.334	.506	.680	.860	1.070	1.300	1.590	2.070	21.1	22.0	.153	.306	.462	.620	.780	.947	1.125	1.318	1.540	1.825	2.260
	do	do	Ring 10°	15.8	17.0	.167	.334	.504	.679	.861	1.060	1.287	1.570	2.035													
	do	do	Ring 5°	15.8	17.0	.167	.334	.504	.679	.861	1.059	1.282	1.578	2.063													
	do	do	Ring 0°	15.8	17.0	.167	.334	.504	.679	.862	1.063	1.289	1.583	2.080													
	do	do	Ring −5°	15.8	17.0	.165	.332	.502	.677	.862	1.063	1.292	1.580	2.020													
	do	do	Ring −10°	15.8	17.0	.166	.333	.502	.679	.863	1.063	1.290	1.575	2.020													
	do	Ring 4°	Exposed cylinders	15.8	17.0	.167	.335	.504	.677	.862	1.063	1.280	1.560	1.995													
	do	Ring 0°	do	15.8	17.0	.167	.334	.504	.680	.865	1.065	1.297	1.586	2.065													
	do	Ring −5°	do	15.8	17.0	.167	.334	.506	.678	.860	1.061	1.288	1.578	2.035	21.1	22.0	.152	.304	.459	.618	.780	.946	1.124	1.313	1.540	1.835	2.280
	do	Ring −8°	do	15.8	17.0	.166	.333	.504	.678	.863	1.064	1.295	1.595	2.115	21.1	22.0	.152	.306	.461	.620	.781	.950	1.128	1.322	1.545	1.835	2.290
	do	Ring −10°	do	15.8	17.0	.167	.334	.505	.678	.862	1.064	1.288	1.575	2.040	21.1	22.0	.152	.306	.462	.619	.780	.947	1.120	1.315	1.537	1.816	2.240
	do	Ring 4°	Ring 5°	15.8	17.0	.166	.334	.503	.675	.860	1.057	1.280	1.560	1.975													
	do	Ring −5°	do	15.8	17.0	.167	.334	.505	.678	.860	1.061	1.290	1.587	2.068													
	do	Ring 0°	do	15.8	17.0	.167	.334	.502	.677	.860	1.061	1.290	1.578	2.035	21.1	22.0	.152	.305	.460	.619	.780	.944	1.120	1.315	1.530	1.808	2.260
	do	do	Ring 10°	15.8	17.0	.166	.333	.501	.675	.861	1.062	1.290	1.580	2.060													
	do	do	Ring 0°	15.8	17.0	.167	.334	.504	.678	.860	1.060	1.290	1.582	2.080													
3-B	Large	N.A.C.A. hood	Ring 5°	15.7	17.2	.167	.334	.504	.677	.861	1.060	1.290	1.590	2.150	20.8	22.0	.154	.308	.463	.620	.780	.949	1.126	1.312	1.562	1.863	2.340
4-B	do	do	do	16.1	17.0	.166	.333	.501	.674	.853	1.048	1.272	1.552	2.030	21.3	22.0	.152	.304	.459	.615	.775	.940	1.116	1.310	1.527	1.814	2.240
1-C	do	do	do	15.8	17.0	.166	.336	.503	.676	.853	1.050	1.272	1.553	2.005	21.0	22.0	.154	.308	.462	.620	.776	.941	1.113	1.304	1.520	1.793	2.190
	Small	Exposed cylinders	Exposed cylinders	14.7	15.6	.171	.342	.517	.696	.834	1.088	1.333	1.650	2.285	21.2	22.0	.152	.306	.460	.617	.777	.939	1.109	1.296	1.508	1.780	2.170
	do	Ring 0°	Ring 5°	14.7	15.6	.171	.342	.517	.695	.835	1.090	1.330	1.640	2.220													
2-C	Large	N.A.C.A. hood	do	15.8	17.0	.166	.333	.502	.675	.855	1.048	1.263	1.528	1.922	21.0	22.0	.153	.307	.462	.618	.777	.940	1.110	1.300	1.512	1.784	2.180
3-C	do	do	do	15.8	17.0	.167	.334	.502	.676	.857	1.050	1.270	1.536	1.934	21.0	22.0	.153	.307	.462	.619	.778	.942	1.116	1.300	1.510	1.780	2.170

TABLE VIII—Continued

PROPELLER OPERATING COEFFICIENT, $C_S=\sqrt[5]{\frac{\rho V^5}{P n_P^2}}$—Continued

ANGLE OF ATTACK=5°

Front propeller: Right-hand no. 4412—4-foot diameter. Rear propeller: Left-hand no. 4412—4-foot diameter

Nacelle position	Type of nacelle	Engine cowling		Propeller pitch at 0.75 R.		$\frac{V}{nD}$									Propeller pitch at 0.75 R.		$\frac{V}{nD}$										
		Front	Rear	Front	Rear	0.1	0.2	0.3	0.4	0.5	0.6	0.7	0.8	0.9	Front	Rear	0.1	0.2	0.3	0.4	0.5	0.6	0.7	0.8	0.9	1.0	1.1
				°	°										°	°											
1-A	Large	N.A.C.A. hood	Ring 5°	17.0	17.0	0.164	0.330	0.497	0.670	0.858	1.063	1.317	1.685	3.120	22.0	22.0	0.151	0.303	0.457	0.615	0.775	0.945	1.126	1.330	1.594	2.040	
2-A	do	do	do	15.9	17.1	.165	.332	.502	.676	.860	1.068	1.317	1.665	2.720	20.8	22.0	.156	.308	.462	.620	.781	.951	1.134	1.340	1.600	2.000	
	do	do	Exposed cylinders	15.9	17.1	.166	.333	.502	.675	.861	1.069	1.314	1.673	2.900	20.8	22.0	.153	.306	.461	.618	.781	.950	1.130	1.340	1.595	1.995	3.740
	do	Exposed cylinders	do	15.9	17.1	.166	.334	.504	.679	.862	1.068	1.309	1.651	3.115	20.8	22.0	.153	.306	.462	.620	.782	.954	1.130	1.340	1.595	1.970	3.055
	Small	do	do	15.7	17.0	.170	.336	.506	.685	.876	1.090	1.343	1.718	2.820	20.8	22.0	.153	.306	.464	.623	.788	.960	1.145	1.352	1.608	2.005	
	do	N.A.C.A. hood	Ring 5°	15.8	16.8	.167	.335	.504	.678	.867	1.076	1.320	1.663	2.450													
	do	Ring 0°	do	15.8	16.8	.167	.334	.504	.679	.868	1.073	1.325	1.680	2.630	21.2	22.0	.152	.306	.459	.617	.777	.945	1.128	1.330	1.575	1.930	2.720
3-A	Large	N.A.C.A. hood	do	15.9	17.8	.165	.332	.500	.676	.859	1.070	1.315	1.680		20.9	22.7	.152	.305	.458	.615	.776	.944	1.130	1.335	1.600	1.957	2.590
4-A	do	do	do	15.9	17.0	.167	.334	.503	.678	.863	1.068	1.308	1.628	2.330	21.2	22.0	.151	.305	.460	.618	.778	.945	1.123	1.322	1.568	1.920	2.720
	do	do	Ring 0°	15.9	17.0																						
1-B	do	do	Ring 5°	16.5	17.0	.166	.332	.499	.671	.851	1.047	1.265	1.537	1.940	21.8	22.0	.152	.304	.458	.614	.775	.936	1.108	1.295	1.511	1.780	2.175
2-B	do	do	Ring 0°	15.8	16.8																						
	do	do	Ring 5°	15.8	16.8	.167	.334	.504	.678	.860	1.060	1.280	1.560	2.000	21.2	22.0	.153	.305	.459	.615	.774	.937	1.110	1.295	1.508	1.770	2.142
	do	do	Ring 10°	15.8	16.8																						
	do	do	Exposed cylinders	15.8	16.8	.167	.334	.505	.678	.858	1.057	1.270	1.562	1.985	21.2	22.0	.153	.306	.461	.617	.777	.941	1.112	1.300	1.515	1.785	2.160
	do	Exposed cylinders	do	15.8	16.8	.167	.334	.504	.677	.860	1.060	1.280	1.550	1.955	21.2	22.0	.152	.306	.460	.616	.776	.941	1.111	1.300	1.510	1.773	2.110
	do	Ring −5°	do	15.8	16.8																						
	do	Ring −10°	do	15.8	16.8																						
	do	Ring −15°	do	15.8	16.8																						
	Small	Exposed cylinders	do	15.8	17.0	.167	.334	.505	.680	.864	1.060	1.290	1.573	2.010	21.1	22.0	.153	.306	.460	.618	.780	.948	1.120	1.310	1.525	1.800	2.206
	do	do	Ring 10°	15.8	17.0																						
	do	do	Ring 5°	15.8	17.0																						
	do	do	Ring 0°	15.8	17.0																						
	do	do	Ring −5°	15.8	17.0																						
	do	do	Ring −10°	15.8	17.0																						
	do	Ring 4°	Exposed cylinders	15.8	17.0																						
	do	Ring 0°	do	15.8	17.0	.166	.334	.502	.678	.860	1.060	1.280	1.555	1.978													
	do	Ring −5°	do	15.8	17.0	.166	.334	.502	.676	.860	1.058	1.280	1.550	1.950	21.1	22.0	.153	.305	.460	.618	.780	.947	1.120	1.311	1.530	1.805	2.175
	do	Ring −8°	do	15.8	17.0	.166	.333	.502	.677	.861	1.060	1.282	1.565	1.995	21.1	22.0	.152	.305	.460	.619	.780	.947	1.120	1.310	1.530	1.890	2.190
	do	Ring −10°	do	15.8	17.0	.167	.334	.504	.678	.862	1.058	1.282	1.565	1.965	21.1	22.0	.152	.305	.460	.618	.778	.945	1.118	1.308	1.520	1.784	1.978
	do	Ring 4°	Ring 5°	15.8	17.0																						
	do	Ring −5°	do	15.8	17.0																						
	do	Ring 0°	do	15.8	17.0	.166	.333	.503	.676	.859	1.057	1.276	1.548	1.945													
	do	do	Ring 10°	15.8	17.0																						
	do	do	Ring 0°	15.8	17.0																						
3-B	Large	N.A.C.A. hood	Ring 5°	15.7	17.2	.167	.334	.504	.677	.859	1.059	1.282	1.565	2.040	20.8	22.0	.154	.308	.463	.620	.779	.944	1.123	1.318	1.540	1.816	2.260
4-B	do	do	do	16.1	17.0	.165	.332	.500	.671	.850	1.050	1.268	1.565	1.975	21.3	22.0	.152	.305	.459	.615	.774	.938	1.106	1.293	1.510	1.787	2.205
1-C	do	do	do	15.8	17.0	.167	.334	.503	.677	.858	1.054	1.280	1.552	1.990	21.0	22.0	.154	.306	.460	.617	.774	.940	1.112	1.300	1.514	1.783	2.182
	Small	Exposed cylinders	Exposed cylinders	14.7	15.6	.171	.342	.515	.695	.882	1.088	1.325	1.660	2.140	21.2	22.0	.152	.306	.461	.618	.775	.937	1.105	1.290	1.498	1.745	2.090
	do	Ring 0°	Ring 5°	14.7	15.6	.171	.330	.516	.694	.880	1.080	1.312	1.604	2.108													
2-C	Large	N.A.C.A. hood	do	15.8	17.0	.166	.333	.501	.673	.851	1.048	1.263	1.534	1.950	21.0	22.0	.152	.305	.460	.616	.775	.937	1.110	1.298	1.510	1.784	2.200
3-C	do	do	do	15.8	17.0	.167	.335	.503	.676	.856	1.052	1.270	1.538	1.945	21.0	22.0	.153	.306	.459	.615	.775	.940	1.110	1.296	1.508	1.770	2.101

TABLE IX

LIFT COEFFICIENT WITH PROPELLER OPERATING, $C_{L_P}=\frac{L_P}{qS}$

ANGLE OF ATTACK=−5°

Front propeller: Right-hand no. 4412—4-foot diameter. Rear propeller Left-hand no. 4412—4-foot diameter

Nacelle position	Type of nacelle	Engine cowling		Propeller pitch at 0.75 R.		$\frac{V}{nD}$									Propeller pitch at 0.75 R.		$\frac{V}{nD}$										
		Front	Rear	Front	Rear	0.1	0.2	0.3	0.4	0.5	0.6	0.7	0.8	0.9	Front	Rear	0.1	0.2	0.3	0.4	0.5	0.6	0.7	0.8	0.9	1.0	1.1
				°	°										°	°											
1-A	Large	N.A.C.A. hood	Ring 5°	17.0	17.0				0.159	0.188	0.140	0.132	0.142	0.133	22.0	22.0					0.194	0.189	0.161	0.137	0.126	0.125	0.125
2-A	do	do	do	15.9	17.1				.205	.184	.170	.159	.151	.147	20.8	22.0					.204	.180	.160	.153	.147	.140	.139
	do	do	Exposed cylinders	15.9	17.1				.180	.162	.153	.148	.145	.145	20.8	22.0					.206	.179	.160	.151	.146	.145	.145
	do	Exposed cylinders	do	15.9	17.1				.223	.169	.151	.150	.150	.152	20.8	22.0					.200	.176	.160	.148	.140	.136	.134
	Small	do	do	15.7	17.0				.197	.172	.157	.148	.142	.140	20.8	22.0					.193	.175	.160	.149	.140	.134	.130
	do	N.A.C.A. hood	Ring 5°	15.8	16.8				.198	.183	.170	.162	.155	.150													
	do	Ring 0°	do	15.8	16.8				.190	.165	.148	.139	.139	.144	21.2	22.0					.181	.175	.158	.143	.137	.135	.139
3-A	Large	N.A.C.A. hood	do	15.9	17.8				.204	.190	.167	.154	.143	.135	20.0	22.7					.179	.163	.155	.149	.149	.140	.149
4-A	do	do	do	15.9	17.0				.180	.165	.153	.143	.140	.140	21.2	22.0					.172	.160	.147	.139	.133	.130	.130
	do	do	Ring 0°	15.9	17.0																						
1-B	do	do	Ring 5°	16.5	17.0				.055	.055	.093	.114	.122	.123	21.8	22.0					.074	.074	.090	.110	.122	.132	.140
2-B	do	do	Ring 0°	15.8	16.8																						
	do	do	Ring 5°	15.8	16.8				.085	.103	.119	.130	.140	.150	21.2	22.0					.050	.098	.120	.125	.128	.134	.147
	do	do	Ring 10°	15.8	16.8																						
	do	do	Exposed cylinders	15.8	16.8				.040	.085	.114	.130	.143	.152	21.2	22.0					.095	.101	.104	.110	.125	.141	.151
	do	Exposed cylinders	do	15.8	16.8				.050	.085	.110	.130	.141	.149	21.2	22.0					.066	.094	.113	.130	.140	.146	.150
	do	Ring −5°	do	15.8	16.8																						
	do	Ring −10°	do	15.8	16.8																						
	do	Ring −15°	do	15.8	16.8																						
	Small	Exposed cylinders	do	15.8	17.0				.065	.095	.118	.134	.144	.150	21.1	22.0					.095	.115	.130	.140	.150	.155	.160
	do	do	Ring 10°	15.8	17.0																						
	do	do	Ring 5°	15.8	17.0																						
	do	do	Ring 0°	15.8	17.0																						
	do	do	Ring −5°	15.8	17.0																						
	do	do	Ring −10°	15.8	17.0																						
	do	Ring 4°	Exposed cylinders	15.8	17.0																						
	do	Ring 0°	do	15.8	17.0				.073	.102	.120	.131	.138	.141													
	do	Ring −5°	do	15.8	17.0				.058	.093	.118	.132	.143	.148	21.1	22.0					.091	.110	.123	.132	.142	.150	.156
	do	Ring −8°	do	15.8	17.0				.065	.098	.120	.139	.150	.160	21.1	22.0					.070	.098	.120	.133	.143	.150	.150
	do	Ring −10°	do	15.8	17.0				.055	.096	.120	.142	.153	.162	21.1	22.0					.050	.095	.126	.138	.138	.140	.152
	do	Ring 4°	Ring 5°	15.8	17.0																						
	do	Ring −5°	do	15.8	17.0																						
	do	Ring 0°	do	15.8	17.0				.192	.112	.127	.137	.145	.150	21.1	22.0					.092	.108	.120	.133	.144	.153	.157
	do	do	Ring 10°	15.8	17.0																						
	do	do	Ring 0°	15.8	17.0																						
3-B	Large	N.A.C.A. hood	Ring 5°	15.7	17.2				.100	.100	.105	.112	.125	.140	20.8	22.0					.064	.081	.108	.120	.127	.132	.131
4-B	do	do	do	16.1	17.0				.044	.075	.096	.110	.120	.125	21.3	22.0					.079	.085	.100	.110	.118	.125	.130
1-C	do	do	do	15.8	17.0				.173	.143	.132	.128	.131	.135	21.0	22.0					.177	.154	.141	.136	.134	.138	.143
	Small	Exposed cylinders	Exposed cylinders	14.7	15.6				.159	.157	.152	.143	.139	.135	21.2	22.0					.155	.153	.151	.148	.146	.143	.141
	do	Ring 0°	Ring 5°	14.7	15.6				.173	.153	.141	.133	.133	.136													
2-C	Large	N.A.C.A. hood	do	15.8	17.0				.183	.169	.158	.153	.150	.148	21.0	22.0					.150	.153	.158	.158	.158	.158	.156
3-C	do	do	do	15.8	17.0				.151	.141	.135	.133	.135	.140	21.0	22.0					.131	.143	.143	.133	.128	.128	.127

TABLE IX—Continued

LIFT COEFFICIENT WITH PROPELLER OPERATING, $C_{L_P}=\frac{L_P}{qS}$—Continued

ANGLE OF ATTACK=0°

Front propeller: Right-hand no. 4412—4-foot diameter. Rear propeller: Left-hand no. 4412—4-foot diameter

Nacelle position	Type of nacelle	Engine cowling		Propeller pitch at 0.75 R.		$\frac{V}{nD}$									Propeller pitch at 0.75 R.		$\frac{V}{nD}$										
		Front	Rear	Front	Rear	0.1	0.2	0.3	0.4	0.5	0.6	0.7	0.8	0.9	Front	Rear	0.1	0.2	0.3	0.4	0.5	0.6	0.7	0.8	0.9	1.0	1.1
				°	°										°	°											
1-A	Large	N.A.C.A. hood	Ring 5°	17.0	17.0				0.448	0.417	0.398	0.385	0.375	0.370	22.0	22.0					0.450	0.422	0.400	0.378	0.366	0.362	0.362
2-A	do	do	do	15.9	17.1				.455	.412	.399	.388	.382	.379	20.8	22.0					.438	.414	.399	.391	.388	.384	.382
	do	do	Exposed cylinders	15.9	17.1				.450	.418	.395	.381	.375	.370	20.8	22.0					.415	.403	.396	.391	.388	.384	.380
	do	Exposed cylinders	do	15.9	17.1				.456	.402	.384	.380	.379	.376	20.8	22.0					.435	.410	.395	.384	.377	.373	.370
	Small	do	do	15.7	17.0				.434	.409	.390	.380	.375	.370	20.8	22.0					.423	.406	.393	.381	.376	.372	
	do	N.A.C.A. hood	Ring 5°	15.8	16.8				.475	.433	.408	.390	.380	.375													
	do	Ring 0°	do	15.8	16.8				.435	.405	.388	.379	.375	.364	21.2	22.0					.436	.412	.397	.386	.382	.380	.377
3-A	Large	N.A.C.A. hood	do	15.9	17.8				.448	.409	.386	.380	.380	.381	20.9	22.7					.435	.400	.383	.375	.370	.369	.369
4-A	do	do	do	15.9	17.0				.407	.410	.385	.370	.363	.360	21.2	22.0					.415	.400	.390	.384	.390	.377	.373
	do	do	Ring 0°	15.9	17.0				.434	.408	.390	.375	.369	.369													
1-B	do	do	Ring 5°	16.5	17.0				.320	.319	.329	.345	.357	.361	21.8	22.0					.302	.329	.342	.342	.343	.353	.369
2-B	do	do	Ring 0°	15.8	16.8				.313	.329	.342	.355	.364	.374													
	do	do	Ring 5°	15.8	16.8				.299	.323	.341	.353	.361	.366	21.2	22.0					.295	.340	.352	.354	.358	.362	.370
	do	do	Ring 10°	15.8	16.8				.293	.320	.340	.352	.362	.368													
	do	do	Exposed cylinders	15.8	16.8				.303	.328	.343	.355	.360	.370	21.2	22.0					.313	.346	.357	.354	.354	.363	.373
	do	Exposed cylinders	do	15.8	16.8				.308	.329	.346	.360	.372	.383	21.2	22.0					.330	.342	.352	.360	.366	.372	.376
	do	Ring −5°	do	15.8	16.8				.293	.323	.343	.358	.366	.371													
	do	Ring −10°	do	15.8	16.8				.320	.333	.345	.350	.365	.370													
	do	Ring −15°	do	15.8	16.8				.300	.326	.345	.359	.369	.375													
	Small	Exposed cylinders	do	15.8	17.0				.305	.340	.316	.373	.380	.380	21.1	22.0					.325	.340	.354	.362	.370	.378	.382
	do	do	Ring 10°	15.8	17.0				.319	.335	.351	.364	.377	.386													
	do	do	Ring 5°	15.8	17.0				.303	.330	.348	.362	.370	.376													
	do	do	Ring 0°	15.8	17.0				.325	.328	.337	.350	.366	.388													
	do	do	Ring −5°	15.8	17.0				.343	.345	.349	.357	.367	.378													
	do	do	Ring −10°	15.8	17.0				.327	.340	.348	.350	.360	.381													
	do	Ring 4°	Exposed cylinders	15.8	17.0				.329	.338	.349	.360	.372	.384													
	do	Ring 0°	do	15.8	17.0				.310	.336	.355	.369	.381	.388													
	do	Ring −5°	do	15.8	17.0				.308	.338	.358	.370	.377	.379	21.1	22.0					.330	.343	.356	.366	.373	.380	.383
	do	Ring −8°	do	15.8	17.0				.329	.345	.359	.370	.379	.389	21.1	22.0					.326	.346	.362	.371	.378	.380	.380
	do	Ring −10°	do	15.8	17.0				.306	.337	.353	.364	.369	.367	21.1	22.0					.320	.345	.355	.356	.364	.378	.386
	do	Ring 4°	Ring 5°	15.8	17.0				.307	.328	.344	.355	.365	.371													
	do	Ring −5°	do	15.8	17.0				.305	.326	.343	.358	.369	.379													
	do	Ring 0°	do	15.8	17.0				.306	.335	.358	.372	.380	.382	21.1	22.0					.333	.347	.360	.370	.375	.382	.388
	do	do	Ring 10°	15.8	17.0				.312	.328	.343	.356	.367	.374													
	do	do	Ring 0°	15.8	17.0				.312	.337	.355	.370	.378	.387													
3-B	Large	N.A.C.A. hood	Ring 5°	15.7	17.2				.320	.328	.343	.355	.364	.372	20.8	22.0					.305	.333	.345	.348	.358	.372	.375
4-B	do	do	do	16.1	17.0				.298	.322	.340	.355	.363	.370	21.3	22.0					.311	.332	.333	.355	.369	.370	.359
1-C	do	do	do	15.8	17.0				.413	.391	.378	.370	.366	.366	21.0	22.0					.409	.393	.380	.370	.363	.361	.358
	Small	Exposed cylinders	Exposed cylinders	14.7	15.6				.403	.398	.391	.381	.372	.363	21.2	22.0					.403	.397	.390	.383	.376	.369	.361
	do	Ring 0°	Ring 5°	14.7	15.6				.407	.383	.370	.361	.355	.351													
2-C	Large	N.A.C.A. hood	do	15.8	17.0				.427	.407	.393	.388	.384	.383	21.0	22.0					.424	.410	.395	.386	.380	.378	.378
3-C	do	do	do	15.8	17.0				.391	.375	.365	.358	.353	.358	21.0	22.0					.406	.383	.366	.357	.357	.360	.360

TABLE IX—Continued

LIFT COEFFICIENT WITH PROPELLER OPERATING, $C_{L_P}=\frac{L_P}{qS}$—Continued

ANGLE OF ATTACK=5°

Front propeller: Right hand no. 4412—4-foot diameter. Rear propeller: Left hand no. 4412—4-foot diameter

Nacelle position	Type of nacelle	Engine cowling		Propeller pitch at 0.75 R.		$\frac{V}{nD}$									Propeller pitch at 0.75 R.		$\frac{V}{nD}$										
		Front	Rear	Front	Rear	0.1	0.2	0.3	0.4	0.5	0.6	0.7	0.8	0.9	Front	Rear	0.1	0.2	0.3	0.4	0.5	0.6	0.7	0.8	0.9	1.0	1.1
				°	°										°	°											
1-A	Large	N.A.C.A. hood	Ring 5°	17.0	17.0				0.633	0.605	0.641	0.611	0.608	0.611	22.0	22.0					0.658	0.640	0.628	0.618	0.612	0.610	0.610
2-A	do	do	do	15.9	17.1				.640	.633	.625	.619	.615	.610	20.8	22.0					.658	.638	.625	.615	.610	.608	.604
	do	do	Exposed cylinders	15.9	17.1				.652	.631	.619	.607	.603	.596	20.8	22.0					.651	.635	.621	.613	.606	.600	.594
	do	Exposed cylinders	do	15.9	17.1				.685	.641	.620	.610	.604	.600	20.8	22.0					.648	.631	.620	.611	.604	.595	.590
	Small	do	do	15.7	17.0				.670	.643	.625	.610	.599	.592	20.8	22.0					.652	.640	.624	.614	.610	.606	.600
	do	N.A.C.A. hood	Ring 5°	15.8	16.8				.695	.660	.630	.625	.616	.610													
	do	Ring 0°	do	15.8	16.8				.690	.639	.620	.600	.603	.597	21.2	22.0					.668	.643	.628	.615	.608	.603	.600
3-A	Large	N.A.C.A. hood	do	15.9	17.8				.670	.634	.618	.608	.603	.600	20.9	22.7					.653	.635	.623	.615	.600	.608	.606
4-A	do	do	do	15.9	17.0				.680	.645	.622	.608	.603	.602	21.2	22.0					.660	.642	.622	.610	.604	.600	.602
	do	do	Ring 0°	15.9	17.0																						
1-B	do	do	Ring 5°	16.5	17.0				.572	.580	.588	.592	.595	.597	21.8	22.0					.574	.575	.583	.590	.595	.599	.601
2-B	do	do	Ring 0°	15.8	16.8																						
	do	do	Ring 5°	15.8	16.8				.560	.575	.582	.588	.590	.591	21.2	22.0					.580	.588	.590	.582	.585	.594	.602
	do	do	Ring 10°	15.8	16.8																						
	do	do	Exposed cylinders	15.8	16.8				.593	.580	.583	.593	.601	.609	21.2	22.0					.588	.590	.592	.589	.586	.593	.609
	do	Exposed cylinders	do	15.8	16.8				.560	.580	.590	.600	.606	.611	21.2	22.0					.560	.580	.588	.596	.603	.606	.609
	do	Ring −5°	do	15.8	16.8																						
	do	Ring −10°	do	15.8	16.8																						
	do	Ring −15°	do	15.8	16.8																						
	Small	Exposed cylinders	do	15.8	17.0				.594	.600	.602	.605	.610	.611	21.1	22.0					.572	.580	.600	.606	.610	.613	.614
	do	do	Ring 10°	15.8	17.0																						
	do	do	Ring 5°	15.8	17.0																						
	do	do	Ring 0°	15.8	17.0																						
	do	do	Ring −5°	15.8	17.0																						
	do	do	Ring −10°	15.8	17.0																						
	do	Ring 4°	Exposed cylinders	15.8	17.0																						
	do	Ring 0°	do	15.8	17.0				.581	.589	.596	.604	.613	.621													
	do	Ring −5°	do	15.8	17.0				.590	.592	.598	.603	.607	.609	21.1	22.0					.582	.590	.597	.604	.608	.610	.611
	do	Ring −8°	do	15.8	17.0				.588	.599	.605	.612	.618	.621	21.1	22.0					.572	.584	.595	.603	.610	.614	.618
	do	Ring −10°	do	15.8	17.0				.580	.580	.598	.603	.610	.614	21.1	22.0					.597	.597	.597	.598	.603	.600	.613
	do	Ring 4°	Ring 5°	15.8	17.0																						
	do	Ring −5°	do	15.8	17.0																						
	do	Ring 0°	do	15.8	17.0				.573	.585	.595	.601	.606	.610													
	do	do	Ring 10°	15.8	17.0																						
	do	do	Ring 0°	15.8	17.0																						
3-B	Large	N.A.C.A. hood	Ring 5°	15.7	17.2				.595	.579	.573	.575	.580	.593	20.8	22.0					.572	.578	.580	.581	.583	.585	.585
4-B	do	do	do	16.1	17.0				.580	.589	.584	.593	.608	.607	21.3	22.0					.573	.575	.580	.590	.597	.606	.610
1-C	do	do	do	15.8	17.0				.683	.648	.626	.614	.611	.603	21.0	22.0					.668	.663	.639	.622	.612	.603	.601
	Small	Exposed cylinders	Exposed cylinders	14.7	15.6				.684	.656	.628	.603	.583	.569	21.2	22.0					.637	.653	.629	.611	.598	.587	.578
	do	Ring 0°	Ring 5°	14.7	15.6				.683	.633	.601	.586	.578	.573													
2-C	Large	N.A.C.A. hood	do	15.8	17.0				.693	.665	.645	.633	.623	.616	21.0	22.0					.683	.657	.637	.629	.622	.618	.616
3-C	do	do	do	15.8	17.0				.685	.646	.613	.604	.603	.686	21.0	22.0					.663	.648	.631	.617	.608	.604	.603

TABLE X

MOMENT COEFFICIENT WITH PROPELLER OPERATING, $C_{m_P}=\frac{M_P}{qSc}$

ANGLE OF ATTACK=−5°

Front propeller: Right-hand no. 4412—4-foot diameter. Rear propeller: Left-hand no. 4412—4-foot diameter

Nacelle position	Type of nacelle	Engine cowling		Propeller pitch at 0.75 R.		$\frac{V}{nD}$									Propeller pitch at 0.75 R.		$\frac{V}{nD}$										
		Front	Rear	Front	Rear	0.1	0.2	0.3	0.4	0.5	0.6	0.7	0.8	0.9	Front	Rear	0.1	0.2	0.3	0.4	0.5	0.6	0.7	0.8	0.9	1.0	1.1
				°	°										°	°											
1-A	Large	N.A.C.A. hood	Ring 5°	17.0	17.0				−0.253	−0.165	−0.120	−0.093	−0.074	−0.061	22.0	22.0					−0.220	−0.157	−0.122	−0.100	−0.085	−0.075	−0.065
2-A	do	do	do	15.9	17.1				−.253	−.159	−.118	−.089	−.072	−.060	20.8	22.0					−.215	−.155	−.120	−.098	−.082	−.070	−.064
	do	do	Exposed cylinders.	15.9	17.1				−.248	−.162	−.118	−.089	−.072	−.060	20.8	22.0					−.213	−.152	−.119	−.090	−.080	−.068	−.062
	do	Exposed cylinders.	do	15.9	17.1				−.255	−.158	−.115	−.088	−.070	−.058	20.8	22.0					−.200	−.148	−.117	−.093	−.078	−.067	−.060
	Small	do	do	15.7	17.0				−.250	−.150	−.110	−.085	−.065	−.055	20.8	22.0					−.207	−.152	−.116	−.093	−.078	−.067	−.060
	do	N.A.C.A. hood	Ring 5°	15.8	16.8				−.235	−.152	−.112	−.085	−.068	−.055													
	do	Ring 0°	do	15.8	16.8				−.243	−.150	−.112	−.085	−.067	−.055	21.2	22.0					−.200	−.145	−.114	−.094	−.079	−.068	−.060
3-A	Large	N.A.C.A. hood	do	15.9	17.8				−.245	−.159	−.113	−.087	−.070	−.058	20.9	22.7					−.202	−.148	−.115	−.093	−.078	−.068	−.062
4-A	do	do	do	15.9	17.0				−.254	−.160	−.117	−.089	−.070	−.055	21.8	22.0					−.204	−.151	−.118	−.096	−.080	−.068	−.059
	do	do	Ring 0°	15.9	17.0																						
1-B	do	do	Ring 5°	16.5	17.0				.059	.007	−.026	−.040	−.046	−.049	21.8	22.0					.040	.000	−.026	−.042	−.052	−.060	−.063
2-B	do	do	Ring 0°	15.8	16.8																						
	do	do	Ring 5°	15.8	16.8				.054	−.005	−.035	−.054	−.068	−.075	21.2	22.0					.047	−.002	−.030	−.048	−.058	−.066	−.072
	do	do	Ring 10°	15.8	16.8																						
	do	do	Exposed cylinders.	15.8	16.8				.055	−.005	−.036	−.055	−.069	−.079	21.2	22.0					.028	−.013	−.040	−.055	−.065	−.072	−.078
	do	Exposed cylinders.	do	15.8	16.8				.049	−.003	−.035	−.056	−.068	−.077	21.2	22.0					.028	−.010	−.033	−.049	−.059	−.067	−.072
	do	Ring −5°	do	15.8	16.8																						
	do	Ring −10°	do	15.8	16.8																						
	do	Ring −15°	do	15.8	16.8																						
	Small	Exposed cylinders.	do	15.8	17.0				.055	−.006	−.039	−.058	−.070	−.076	21.1	22.0					.026	−.013	−.037	−.055	−.065	−.073	−.076
	do	do	Ring 10°	15.8	17.0																						
	do	do	Ring 5°	15.8	17.0																						
	do	do	Ring 0°	15.8	17.0																						
	do	do	Ring −5°	15.8	17.0																						
	do	do	Ring −10°	15.8	17.0																						
	do	Ring 4°	Exposed cylinders.	15.8	17.0																						
	do	Ring 0°	do	15.8	17.0				.052	−.008	−.043	−.063	−.075	−.082													
	do	Ring −5°	do	15.8	17.0				.047	−.012	−.042	−.062	−.073	−.080	21.1	22.0					.025	−.012	−.037	−.054	−.066	−.074	−.079
	do	Ring −8°	do	15.8	17.0				.050	−.010	−.040	−.060	−.072	−.079	21.1	22.0					.023	−.015	−.040	−.056	−.067	−.074	−.079
	do	Ring −10°	do	15.8	17.0				.040	−.010	−.042	−.062	−.073	−.078	21.1	22.0					.025	−.017	−.042	−.057	−.067	−.073	−.077
	do	Ring 4°	Ring 5°	15.8	17.0																						
	do	Ring −5°	do	15.8	17.0																						
	do	Ring 0°	do	15.8	17.0				.055	−.005	−.037	−.057	−.069	−.076	21.1	22.0					.034	−.010	−.035	−.053	−.064	−.072	−.077
	do	do	Ring 10°	15.8	17.0																						
	do	do	Ring 0°	15.8	17.0																						
3-B	Large	N.A.C.A. hood	Ring 5°	15.7	17.2				.033	−.014	−.047	−.065	−.077	−.082	20.8	22.0					.022	−.020	−.044	−.058	−.068	−.077	−.082
4-B	do	do	do	16.1	17.0				.063	.002	−.035	−.058	−.071	−.078	21.3	22.0					.035	−.007	−.035	−.052	−.062	−.070	−.077
1-C	do	do	do	15.8	17.0				−.120	−.092	−.083	−.077	−.073	−.072	21.0	22.0					−.102	−.092	−.085	−.079	−.076	−.073	−.072
	Small	Exposed cylinders.	Exposed cylinders.	14.7	15.0				−.105	−.092	−.082	−.073	−.067	−.062	21.2	22.0					−.106	−.094	−.085	−.080	−.075	−.071	−.068
	do	Ring 0°	Ring 5°	14.7	15.0				−.105	−.092	−.083	−.077	−.073	−.069													
2-C	Large	N.A.C.A. hood	do	15.8	17.0				−.098	−.087	−.080	−.076	−.073	−.070	21.0	22.0					−.090	−.083	−.078	−.075	−.072	−.070	−.068
3-C	do	do	do	15.8	17.0				−.101	−.093	−.088	−.085	−.082	−.080	21.0	22.0					−.096	−.092	−.086	−.083	−.081	−.079	−.078

TABLE X—Continued

MOMENT COEFFICIENT WITH PROPELLER OPERATING, $C_{m_P}=\frac{M_P}{qSc}$—Continued

ANGLE OF ATTACK=0°

Front propeller: Right-hand no. 4412—4-foot diameter. Rear propeller: Left-hand no. 4412—4-foot diameter

Nacelle position	Type of nacelle	Engine cowling		Propeller pitch at 0.75 R.		$\frac{V}{nD}$									Propeller pitch at 0.75 R.		$\frac{V}{nD}$										
		Front	Rear	Front	Rear	0.1	0.2	0.3	0.4	0.5	0.6	0.7	0.8	0.9	Front	Rear	0.1	0.2	0.3	0.4	0.5	0.6	0.7	0.8	0.9	1.0	1.1
				°	°										°	°											
1-A	Large	N.A.C.A. hood	Ring 5°	17.0	17.0				−0.244	−0.155	−0.114	−0.087	−0.069	−0.056	22.0	22.0					−0.210	−0.150	−0.115	−0.093	−0.077	−0.067	−0.060
2-A	do	do	do	15.9	17.1				−.238	−.146	−.107	−.080	−.063	−.051	20.8	22.0					−.207	−.147	−.112	−.090	−.075	−.064	−.055
	do	do	Exposed cylinders.	15.9	17.1				−.248	−.152	−.108	−.082	−.065	−.053	20.8	22.0					−.202	−.140	−.111	−.087	−.072	−.062	−.055
	do	Exposed cylinders.	do	15.9	17.1				−.238	−.147	−.107	−.081	−.063	−.052	20.8	22.0					−.194	−.135	−.107	−.088	−.073	−.063	−.054
	Small	do	do	15.7	17.0				−.225	−.145	−.100	−.075	−.060	−.050	20.8	22.0					−.194	−.140	−.100	−.087	−.074	−.063	−.055
	do	N.A.C.A. hood	Ring 5°	15.8	16.8				−.231	−.142	−.103	−.077	−.060	−.048													
	do	Ring 0°	do	15.8	16.8				−.225	−.147	−.104	−.079	−.062	−.051	21.2	22.0					−.200	−.144	−.110	−.088	−.072	−.060	−.051
3-A	Large	N.A.C.A. hood	do	15.9	17.8				−.240	−.152	−.107	−.079	−.060	−.049	20.9	22.7					−.190	−.140	−.100	−.085	−.070	−.059	−.052
4-A	do	do	do	15.9	17.0				−.227	−.153	−.108	−.081	−.063	−.051	21.2	22.0					−.195	−.142	−.109	−.086	−.069	−.057	−.048
	do	do	Ring 0°	15.9	17.0				−.235	−.144	−.103	−.078	−.060	−.049													
1-B	do	do	Ring 5°	16.5	17.0				.068	.015	−.022	−.044	−.057	−.064	21.8	22.0					.042	.004	−.024	−.040	−.050	−.057	−.065
2-B	do	do	Ring 0°	15.8	16.8				.062	.005	−.030	−.050	−.063	−.069													
	do	do	Ring 5°	15.8	16.8				.055	.002	−.029	−.050	−.063	−.074	21.2	22.0					.042	.000	−.026	−.043	−.054	−.060	−.064
	do	do	Ring 10°	15.8	16.8				.050	.006	−.029	−.050	−.062	−.070													
	do	do	Exposed cylinders.	15.8	16.8				.057	.000	−.031	−.051	−.063	−.072	21.2	22.0					.044	−.002	−.030	−.047	−.058	−.065	−.070
	do	Exposed cylinders.	do	15.8	16.8				.064	.003	−.030	−.049	−.060	−.069	21.2	22.0					.042	.000	−.026	−.044	−.055	−.062	−.068
	do	Ring −5°	do	15.8	16.8				.060	.000	−.034	−.053	−.065	−.070													
	do	Ring −10°	do	15.8	16.8				.062	−.001	−.035	−.054	−.066	−.073													
	do	Ring −15°	do	15.8	16.8				.057	.000	−.033	−.053	−.066	−.074													
	Small	Exposed cylinders.	do	15.8	17.0				.053	−.004	−.034	−.053	−.065	−.074	21.1	22.0					.037	−.007	−.032	−.050	−.060	−.066	−.069
	do	do	Ring 10°	15.8	17.0				.070	.002	−.031	−.050	−.063	−.070													
	do	do	Ring 5°	15.8	17.0				.061	.002	−.029	−.049	−.062	−.070													
	do	do	Ring 0°	15.8	17.0				.060	.000	−.032	−.052	−.064	−.072													
	do	do	Ring −5°	15.8	17.0				.058	.003	−.030	−.049	−.062	−.071													
	do	do	Ring −10°	15.8	17.0				.055	.000	−.031	−.051	−.064	−.071													
	do	Ring 4°	Exposed cylinders.	15.8	17.0				.063	−.004	−.035	−.054	−.068	−.077													
	do	Ring 0°	do	15.8	17.0				.051	−.004	−.035	−.054	−.067	−.075													
	do	Ring −5°	do	15.8	17.0				.063	−.002	−.033	−.053	−.065	−.073	21.1	22.0					.037	−.005	−.030	−.048	−.058	−.065	−.068
	do	Ring −8°	do	15.8	17.0				.060	.000	−.033	−.052	−.063	−.072	21.1	22.0					.040	−.008	−.033	−.046	−.057	−.065	−.070
	do	Ring −10°	do	15.8	17.0				.056	.000	−.033	−.053	−.065	−.072	21.1	22.0					.036	−.006	−.031	−.048	−.058	−.065	−.068
	do	Ring 4°	Ring 5°	15.8	17.0				.062	.001	−.032	−.050	−.063	−.072													
	do	Ring −5°	do	15.8	17.0				.057	.002	−.032	−.052	−.063	−.072													
	do	Ring 0°	do	15.8	17.0				.059	.002	−.031	−.051	−.064	−.072	21.1	22.0					.038	.000	−.027	−.045	−.056	−.064	−.072
	do	do	Ring 10°	15.8	17.0				.065	.002	−.033	−.049	−.061	−.072													
	do	do	Ring 0°	15.8	17.0				.060	.000	−.033	−.052	−.065	−.074													
3-B	Large	N.A.C.A. hood	Ring 5°	15.7	17.2				.042	−.003	−.035	−.055	−.068	−.077	20.8	22.0					.030	−.012	−.036	−.050	−.060	−.068	−.073
4-B	do	do	do	16.1	17.0				.064	.010	−.028	−.051	−.063	−.070	21.3	22.0					.050	.000	−.030	−.046	−.056	−.063	−.069
1-C	do	do	do	15.8	17.0				−.097	−.084	−.075	−.068	−.063	−.060	21.0	22.0					−.094	−.082	−.074	−.068	−.065	−.063	−.062
	Small	Exposed cylinders.	Exposed cylinders.	14.7	15.6				−.100	−.087	−.078	−.070	−.065	−.060	21.2	22.0					−.095	−.088	−.082	−.076	−.072	−.067	−.064
	do	Ring 0°	Ring 5°	14.7	15.6				−.100	−.086	−.076	−.066	−.061	−.057													
2-C	Large	N.A.C.A. hood	do	15.8	17.0				−.082	−.072	−.065	−.062	−.060	−.058	21.0	22.0					−.078	−.073	−.068	−.065	−.062	−.060	−.058
3-C	do	do	do	15.8	17.0				−.084	−.079	−.075	−.072	−.070	−.068	21.0	22.0					−.080	−.076	−.072	−.070	−.068	−.067	−.066

TABLE X—Continued

MOMENT COEFFICIENT WITH PROPELLER OPERATING, $C_{m_P}=\frac{M_P}{qSc}$—Continued

ANGLE OF ATTACK=5°

Front propeller: Right-hand no. 4412—4-foot diameter. Rear propeller: Left-hand no. 4412—4-foot diameter

Nacelle position	Type of nacelle	Engine cowling		Propeller pitch at 0.75 R.		$\frac{V}{nD}$									Propeller pitch at 0.75 R.		$\frac{V}{nD}$										
		Front	Rear	Front	Rear	0.1	0.2	0.3	0.4	0.5	0.6	0.7	0.8	0.9	Front	Rear	0.1	0.2	0.3	0.4	0.5	0.6	0.7	0.8	0.9	1.0	1.1
				°	°										°	°											
1-A	Large	N.A.C.A. hood	Ring 5°	17.0	17.0				−0.246	−0.160	−0.117	−0.090	−0.072	−0.060	22.0	22.0					−0.213	−0.152	−0.120	−0.095	−0.080	−0.070	−0.060
2-A	do	do	do	15.9	17.1				−.246	−.154	−.110	−.081	−.063	−.052	20.8	22.0					−.208	−.148	−.112	−.091	−.077	−.066	−.057
	do	do	Exposed cylinders.	15.9	17.1				−.245	−.153	−.107	−.080	−.062	−.049	20.8	22.0					−.201	−.143	−.110	−.088	−.072	−.061	−.053
	do	Exposed cylinders.	do	15.9	17.1				−.237	−.153	−.107	−.078	−.060	−.048	20.8	22.0					−.198	−.137	−.108	−.087	−.072	−.061	−.052
	Small	do	do	15.7	17.0				−.230	−.145	−.100	−.078	−.062	−.050	20.8	22.0					−.202	−.140	−.105	−.083	−.068	−.059	−.054
	do	N.A.C.A. hood	Ring 5°	15.8	16.8				−.223	−.143	−.099	−.077	−.060	−.049													
	do	Ring 0°	do	15.8	16.8				−.229	−.142	−.098	−.072	−.055	−.044	21.2	22.0					−.200	−.140	−.100	−.080	−.068	−.058	−.050
3-A	Large	N.A.C.A. hood	do	15.9	17.8				−.224	−.140	−.097	−.070	−.055	−.045	20.9	22.7					−.207	−.142	−.103	−.080	−.065	−.057	−.052
4-A	do	do	do	15.9	17.0				−.228	−.150	−.104	−.078	−.059	−.047	21.2	22.0					−.198	−.140	−.108	−.085	−.070	−.058	−.050
	do	do	Ring 0°	15.9	17.0																						
1-B	do	do	Ring 5°	16.5	17.0				.081	−.016	−.022	−.041	−.053	−.063	21.8	22.0					.053	.010	−.020	−.038	−.050	−.058	−.064
2-B	do	do	Ring 0°	15.8	16.8																						
	do	do	Ring 5°	15.8	16.8				.070	.007	−.028	−.048	−.059	−.065	21.2	22.0					.052	.007	−.020	−.040	−.052	−.057	−.062
	do	do	Ring 10°	15.8	16.8																						
	do	do	Exposed cylinders.	15.8	16.8				.065	.004	−.029	−.050	−.063	−.070	21.2	22.0					.042	−.002	−.028	−.044	−.055	−.061	−.067
	do	Exposed cylinders.	do	15.8	16.8				.065	.010	−.026	−.048	−.060	−.068	21.2	22.0					.050	.000	−.026	−.042	−.051	−.060	−.065
	do	Ring −5°	do	15.8	16.8																						
	do	Ring −10°	do	15.8	16.8																						
	do	Ring −15°	do	15.8	16.8																						
	Small	Exposed cylinders.	do	15.8	17.0				.063	.000	−.033	−.053	−.065	−.072	21.1	22.0					.062	−.007	−.031	−.043	−.053	−.060	−.067
	do	do	Ring 10°	15.8	17.0																						
	do	do	Ring 5°	15.8	17.0																						
	do	do	Ring 0°	15.8	17.0																						
	do	do	Ring −5°	15.8	17.0																						
	do	do	Ring −10°	15.8	17.0																						
	do	Ring 4°	Exposed cylinders.	15.8	17.0																						
	do	Ring 0°	do	15.8	17.0				.067	.002	−.032	−.052	−.063	−.072													
	do	Ring −5°	do	15.8	17.0				.082	.001	−.032	−.050	−.063	−.068	21.1	22.0					.040	−.002	−.030	−.047	−.057	−.063	−.067
	do	Ring −8°	do	15.8	17.0				.066	.001	−.030	−.050	−.062	−.070	21.1	22.0					.037	−.002	−.028	−.046	−.059	−.067	−.071
	do	Ring −10°	do	15.8	17.0				.057	.000	−.030	−.050	−.063	−.072	21.1	22.0					.042	−.004	−.028	−.045	−.055	−.064	−.070
	do	Ring 4°	Ring 5°	15.8	17.0																						
	do	Ring −5°	do	15.8	17.0																						
	do	Ring 0°	do	15.8	17.0				.062	.005	−.030	−.049	−.060	−.068													
	do	do	Ring 10°	15.8	17.0																						
	do	do	Ring 0°	15.8	17.0																						
3-B	Large	N.A.C.A. hood	Ring 5°	15.7	17.2				.055	.002	−.034	−.053	−.062	−.065	20.8	22.0					.035	−.003	−.028	−.045	−.055	−.062	−.065
4-B	do	do	do	16.1	17.0				.071	.011	−.025	−.047	−.059	−.065	21.3	22.0					.057	.007	−.026	−.044	−.054	−.060	−.063
1-C	do	do	do	15.8	17.0				−.043	−.028	−.018	−.012	−.008	−.007	21.0	22.0					−.080	−.073	−.068	−.063	−.060	−.057	−.055
	Small	Exposed cylinders.	Exposed cylinders.	14.7	15.6				−.048	−.038	−.029	−.021	−.015	−.014	21.2	22.0					−.097	−.086	−.078	−.074	−.073	−.069	−.065
	do	Ring 0°	Ring 5°	14.7	15.6				−.100	−.079	−.070	−.064	−.059	−.055													
2-C	Large	N.A.C.A. hood	do	15.8	17.0				−.063	−.059	−.057	−.055	−.055	−.055	21.0	22.0					−.058	−.057	−.057	−.056	−.055	−.055	−.054
3-C	do	do	do	15.8	17.0				−.068	−.069	−.069	−.068	−.065	−.063	21.0	22.0					−.070	−.068	−.066	−.060	−.060	−.060	−.060

TABLE XI

PROPELLER COEFFICIENTS—NACELLE-ALONE TESTS

Front propeller: Right-hand no. 4412—4-foot diameter. Rear propeller: Left-hand no. 4412—4-foot diameter. Angle of attack=0°

Type of nacelle		Engine cowling		Propeller pitch at 0.75 R.		$\frac{V}{nD}$									
		Front	Rear	Front	Rear	0.1	0.2	0.3	0.4	0.5	0.6	0.7	0.8	0.9	1.0
Propeller spacing 1 diameter															
Thrust coefficient $C_T=\frac{T-\Delta D}{\rho n_F^2 D^4}$	Large	N.A.C.A. hood	Ring 5°	16.6	17.0	0.1555	0.1454	0.1326	0.1163	0.0973	0.0760	0.0517	0.0238	−0.0060	--------
	Small	Ring 0°	do	16.4	17.0	.1561	.1453	.1322	.1165	.0987	.0793	.0579	.0323	.0040	--------
	Do	Exposed cylinders	Exposed cylinders	16.4	17.0	.1558	.1452	.1318	.1156	.0969	.0761	.0535	.0261	−.0010	--------
Propeller spacing 1½ diameters															
	Large	N.A.C.A. hood	Ring 5°	16.4	17.0	0.1572	0.1458	0.1317	0.1148	0.0953	0.0741	0.0509	0.0243	−0.0065	--------
Propeller spacing 1 diameter															
Front propeller power coefficient $C_{P_F}=\frac{P_F}{\rho n_F^3 D^5}$	Large	N.A.C.A. hood	Ring 5°	16.6	17.0	0.0384	0.0384	0.0382	0.0380	0.0352	0.0307	0.0245	0.0160	0.0045	--------
	Small	Ring 0°	do	16.4	17.0	.0380	.0380	.0380	.0367	.0337	.0293	.0233	.0150	.0040	--------
	Do	Exposed cylinders	Exposed cylinders	16.4	17.0	.0387	.0385	.0382	.0375	.0340	.0295	.0230	.0145	.0040	--------
Propeller spacing 1½ diameters															
	Large	N.A.C.A. hood	Ring 5°	16.4	17.0	0.0376	0.0375	0.0374	0.0372	0.0342	0.0298	0.0235	0.0152	0.0047	--------
Propeller spacing 1 diameter															
Rear propeller power coefficient $C_{P_R}=\frac{P_R}{\rho n_F^3 D^5}$	Large	N.A.C.A. hood	Ring 5°	16.6	17.0	0.0417	0.0409	0.0391	0.0363	0.0330	0.0288	0.0237	0.0164	0.0090	--------
	Small	Ring 0°	do	16.4	17.0	.0412	.0400	.0370	.0355	.0321	.0284	.0232	.0165	.0080	--------
	Do	Exposed cylinders	Exposed cylinders	16.4	17.0	.0404	.0400	.0385	.0353	.0320	.0278	.0233	.0166	.0088	--------
Propeller spacing 1½ diameters															
	Large	N.A.C.A. hood	Ring 5°	16.4	17.0	0.0410	0.0405	0.0389	0.0360	0.0329	0.0285	0.0233	0.0168	0.0086	--------
Propeller spacing 1 diameter															
Propulsive efficiency $\eta=\frac{(T-\Delta D)V}{P}$	Large	N.A.C.A. hood	Ring 5°	16.6	17.0	0.194	0.367	0.514	0.626	0.714	0.766	0.750	0.588	--------	--------
	Small	Ring 0°	do	16.4	17.0	.197	.373	.522	.646	.750	.825	.872	.821	0.345	--------
	Do	Exposed cylinders	Exposed cylinders	16.4	17.0	.197	.369	.516	.636	.735	.798	.809	.672	--------	--------
Propeller spacing 1½ diameters															
	Large	N.A.C.A. hood	Ring 5°	16.4	17.0	0.200	0.374	0.518	0.627	0.712	0.762	0.762	0.607	--------	--------
Propeller spacing 1 diameter															
Propeller operating coefficient $C_S=\sqrt[5]{\frac{\rho V^5}{P n_F^2}}$	Large	N.A.C.A. hood	Ring 5°	16.6	17.0	0.166	0.332	0.501	0.673	0.855	1.054	1.284	1.587	2.130	--------
	Small	Ring 0°	do	16.4	17.0	.166	.333	.503	.676	.861	1.062	1.293	1.597	2.180	--------
	Do	Exposed cylinders	Exposed cylinders	16.4	17.0	.166	.333	.502	.675	.860	1.063	1.293	1.603	2.155	--------
Propeller spacing 1½ diameters															
	Large	N.A.C.A. hood	Ring 5°	16.4	17.0	0.166	0.333	0.502	0.674	0.857	1.060	1.290	1.603	2.130	--------

TABLE XII

RELATIVE MERITS OF TANDEM WING-NACELLE-PROPELLER COMBINATIONS

Front propeller: Right-hand no. 4412—4-foot diameter. Rear propeller: Left-hand no. 4412—4-foot diameter

Nacelle position	Type of nacelle	Engine cowling		Propeller pitch at 0.75 R.		High-speed and cruising condition $V/nD=0.65$ $C_L=0.409$			Climbing condition $V/nD=0.42$ $C_L=0.652$		
		Front	Rear	Front	Rear	Propulsive efficiency (η)	Nacelle drag efficiency factor (N.D.F.)	Net efficiency (η—N.D.F.)	Propulsive efficiency (η)	Nacelle drag efficiency factor (N.D.F.)	Net efficiency (η—N.D.F.)
				°	°						
1-A	Large	N.A.C.A. hood	Ring 5°	17.0	17.0	0.742	0.220	0.522	0.620	0.020	0.600
2-A	do	do	do	15.9	17.1	.760	.220	.540	.622	.042	.580
	do	do	Exposed cylinders	15.9	17.1	.748	.247	.501	.626	.043	.583
	do	Exposed cylinders	do	15.9	17.1	.780	.307	.473	.638	.043	.595
	Small	do	do	15.7	17.0	.788	.402	.386	.640	.061	.579
	do	N.A.C.A. hood	Ring 5°	15.8	16.8	.780	.333	.447	.636	.052	.584
	do	Ring 0°	do	15.8	16.8	.825	.380	.445	.654	.062	.592
3-A	Large	N.A.C.A. hood	do	15.9	17.8	.744	.241	.503	.612	.039	.573
4-A	do	do	do	15.9	17.0	.748	.266	.482	.629	.028	.601
	do	do	Ring 0°	15.9	17.0	.742	.281	.461			
1-B	do	do	Ring 5°	16.5	17.0	.787	.181	.606	.652	.049	.603
2-B	do	do	Ring 0°	15.8	16.8	.790	.205	.585			
	do	do	Ring 5°	15.8	16.8	.800	.189	.611	.667	.031	.636
	do	do	Ring 10°	15.8	16.8	.800	.202	.598			
	do	do	Exposed cylinders	15.8	16.8	.788	.212	.576	.653	.050	.603
	do	Exposed cylinders	do	15.8	16.8	.824	.256	.568	.660	.066	.594
	do	Ring −5°	do	15.8	16.8	.810	.268	.542			
	do	Ring −10°	do	15.8	16.8	.790	.249	.541			
	do	Ring −15°	do	15.8	16.8	.814	.270	.544			
	Small	Exposed cylinders	do	15.8	17.0	.810	.286	.534	.650	.064	.586
	do	do	Ring 10°	15.8	17.0	.850	.304	.546			
	do	do	Ring 5°	15.8	17.0	.835	.277	.558			
	do	do	Ring 0°	15.8	17.0	.830	.306	.524			
	do	do	Ring −5°	15.8	17.0	.820	.297	.523			
	do	do	Ring −10°	15.8	17.0	.800	.322	.478			
	do	Ring 4°	Exposed cylinders	15.8	17.0	.855	.363	.492			
	do	Ring 0°	do	15.8	17.0	.850	.312	.538	.670	.071	.599
	do	Ring −5°	do	15.8	17.0	.800	.264	.536	.670	.057	.613
	do	Ring −8°	do	15.8	17.0	.790	.261	.529	.680	.065	.615
	do	Ring −10°	do	15.8	17.0	.805	.275	.530	.653	.066	.587
	do	Ring 4°	Ring 5°	15.8	17.0	.880	.344	.536			
	do	Ring −5°	do	15.8	17.0	.814	.266	.548			
	do	Ring 0°	do	15.8	17.0	.870	.297	.573	.660	.072	.588
	do	do	Ring 10°	15.8	17.0	.865	.315	.550			
	do	do	Ring 0°	15.8	17.0	.840	.306	.534			
3-B	Large	N.A.C.A. hood	Ring 5°	15.7	17.2	.790	.211	.579	.645	.041	.604
4-B	do	do	do	16.1	17.0	.758	.170	.588	.630	.043	.587
1-C	do	do	do	15.8	17.0	.710	.121	.589	.590	.001	.589
	Small	Exposed cylinders	Exposed cylinders	14.7	15.6	.723	.200	.523	.610	.018	.592
	do	Ring 0°	Ring 5°	14.7	15.6	.775	.271	.504	.605	.015	.590
2-C	Large	N.A.C.A. hood	do	15.8	17.0	.720	.106	.614	.605	.004	.601
3-C	do	do	do	15.8	17.0	.725	.131	.594	.605	−.002	.607