Library, L. M. A. L.

TECHNICAL MEMORANDUMS

NATIONAL ADVISORY COMMITTEE FOR AERONAUTICS

No. 765

THE 1934 CONTEST FOR THE DEUTSCH DE LA MEURTHE TROPHY

By Pierre Léglise

L'Aéronautique, July 1934

Washington
February 1935

1.7.1.2
1.7.1.3

NASA Technical Library
3 1176 01441 1525

NATIONAL ADVISORY COMMITTEE FOR AERONAUTICS

TECHNICAL MEMORANDUM NO. 765

THE 1934 CONTEST FOR THE DEUTSCH DE LA MEURTHE TROPHY*

By Pierre Léglise

INTRODUCTION**

The second contest of the now classic Deutsch de la Meurthe Cup race showed considerable progress over the first; the principle of setting a relatively low limit for the cubic capacity of the engine and giving the designers an otherwise entirely free hand is unquestionably one of the best ways toward rapid technical strides. It must be particularly stressed that the competing airplanes had no certificate of airworthiness of any sort; in fact, Government control was for once completely left aside and the racers allowed to take part in the contest without having been subjected to the slightest examination of officials of the Ministère de l'Air. Thus manufacturers were relieved of the customary administrative difficulties and losses of time. The result proved perfectly satisfactory; airplanes were rapidly built and tried, they demonstrated remarkable flying qualities and performance, and technical advances of great practical value have been attained in a very short space of time. The experience is likely to have long-reaching and beneficial results.

REGULATIONS**

The regulations remained almost identical with those of last year (see Aircraft Engineering, July 1933): a scratch race over the 100 km (62.14 miles) circuit, Etampes-Chartres-Bonce, open to airplanes fitted with engines not exceeding 8 liters (488.2 cu.in.) capacity, over a total distance of 2,000 km (1,242.74 miles) in two flights of 10 laps each. In order to qualify, each competitor was required to cover between April 6 and May 7 a flight of 500 km (310.68 miles) in closed circuit at a speed exceeding 250 km/h (155.34 mi./hr.). In addition, start and landing had to be made in less than 550 m (1,804.46 ft.) over a screen 1 meter high.

---

*L'Aéronautique, July 1934, pp. 151-182.
**Aircraft Engineering, July 1934, p. 179.

I. TECHNICAL COMMENTS

Pilotage

Take-off.- The setting of the wing flaps and of the split flaps was low (8° for the Caudron entries) so as to avoid undue drag increase. All entries having variable-pitch propellers showed quick take-off. The reduction in take-off time was due to:

a) higher thrust during taxying,

b) almost instantaneous rise of tail as a result of the powerful air stream on the tail by the propeller operating at low pitch.

Take-off speeds averaged between 75 and 81 miles per hour. The pilots did not try to stall prematurely, but rather let the airplane roll as long as possible.

In flight.- The gusts through which the airplane passed at high speed were extremely uncomfortable to the pilots.

During the first trials Delmotte, strapped to his seat by an abdominal belt, struck his head several times on the ceiling of his cabin. Subsequently the Caudron pilots used an Aviorex belt, whose 5 straps divided the strains more evenly. Seats with side cushions should be equally advantageous also for holding the pilot in his seat.

Cockpit ventilation.- Potez used a pipe taking the air from above the ring cowling and leading it into the cockpit, where the pilot controlled it by a valve.

Caudron provided capillary vents in the transparent cupola: 3 mm (0.118 in.) pressure orifices at the base and forward of the windshield and 4 mm (0.157 in.) suction orifices aft and above it, thus assuring the pilot a slight breeze from the chin toward the ears, which apparently was quite satisfactory.

In the Caudrons the admission of any fresh air by sliding the top, even the least bit forward, was followed by an insufferable noise - not caused by the engine but by the passage of a turbulent air stream against the ears; with top closed, the noise was insignificant.

Banked turns.- Different pilots used different tactics. Leaving aside the spectacular point of view, the best maneuver is concededly that which effects the most propitious compromise between loss of time due to the bank itself and that of the speed agreed upon. The fast turn is not everything; it is at least as important to regain the straightaway with the highest possible speed.

A badly executed turn may slow up an airplane at 125 miles per hour; since the lift-drag ratios are high, the propeller thrust is low and the time lost to regain the lost speed is not negligible. For this reason the steeply banked turns of Massotte may have cost the Caudron Régnier quite a few miles. Arnoux, on the other hand, rounded the pylons in wide turns.

Only one pilot of the Caudron entries had any real training in banked turns; that was Delmotte. He used 20 different styles, which were timed. His best time was obtained with the following tactics:

Start of climb about 10 km (6.21 miles) before entering the turn by withdrawing from the ideal straight course so as to have the turning point 1,600 feet to the left at the start of the maneuver, then make a slightly banked turn with a radius of 500 meters (1,640 feet), by restoring the height held in reserve. Then the straightaway is regained under the best conditions of speed.

The average loss in a well-executed turn is 10 seconds; the 30 turns for each race thus constitutes a loss of 5 minutes, which is equivalent to about 3 percent lower average speeds.

Landing.- The landings were made easily with flaps set at from 30 to 40°. During the second half of the race Lacombe was forced to land with a very heavy load of fuel, which he accomplished, however, without mishap.

The Caudron entries manifested high longitudinal stability at all speeds because of their large horizontal tail surfaces (fin area equal to 18 percent of wing area, or more than 2 percent greater than in 1933).

The Comper "Streak" had a slight tendency to bounce.

Upsetting moment.- This moment was balanced at take-off, at least in the Caudron entries, by the rudder, no maneuver being necessary in flight. The device installed for this purpose, namely, aileron control rods of different lengths to assure different twist and setting by one force, was not used. Perhaps the pilot reacted subconsciously; on the C.450 and the C.460 a force of 50 g (0.11 lb.) sufficed to move the stick. The moment is of no great consequence; it is the same for the Potez 300 horsepower engine at 2,600 r.p.m. as for a 150 horsepower engine at 1,300 r.p.m., but despite its low figure, it may become much more substantial when the wings are smaller.

OUTLOOK FOR NEXT YEAR'S RACE

The elimination trials should be a little more severe: 300 km/h (186.4 mi./hr.) minimum, take-off and landing in 500 m (1,640 ft.) instead of 550 m (1,800 ft.).

Engines.- The choice between in-line and radial engines always presents the same difficulty.

Drag.- The radial engine facilitates the packing of the air between the propeller and the cowling. This intuitive statement is proved by the fact that the propeller slip on the Potez airplane is negative.* The phenomenon should be so much more appreciable as the diameter of the propeller is smaller with respect to the ring cowling.

This drawback may perhaps be avoided by specially designed spinners, auxiliary fans, or special blade-root sections, the purpose being to avoid this packing or fill-

---

*The Levasseur company, for instance, cites propeller slips of some 10 percent for its twisted duralumin propellers fitted to airplanes flying at 180 to 250 km/h (111.8 to 155.3 mi./hr.). Similar propellers mounted on modern pursuit airplanes flying at 280 to 320 km/h (174 to 198.8 mi./hr.) show that the slip cancels out; lastly, for the racing speeds reaching 400 km/h (248.5 mi./hr.), it changes sign. The phenomenon of "previous engagement" or arresting the air by the fuselage should become more pronounced as the speed increases. Thus, Levasseur adapts the propeller for 340 to 360 km/h (211.3 to 223.7 mi./hr.), although the flight speed is 400 km/h (248.5 mi./hr.). The Ratier propeller, on the other hand, seems to function, for the moment, with zero slip.

ing. The in-line engine, contrariwise, is well exposed, especially when the propeller hub projects, as in the Caudron; the crankshaft is extended 120 mm (4.72 in.). The shape of the fuselage is a perfect turtleback. The lower front, similar to the leading edge of a wing stub mounted vertically, has a low drag. It is practically the same regardless of the twist of the turned-back stream; moreover, if the propeller turns fast (low pitch), the twist is small, the same as the so-called "spoiling drag" of the British.

Cooling.- All entries showed ample cooling this year. The possibilities of the in-line engine are far from being exhausted and the obvious advantage of the radial engine with a greater directly exposed surface is still being ignored. On the other hand, when an in-line engine heats up, there is always the possibility of producing an inside circulation by means of fans, etc.

Cylinders.- There seems to be a tendency to combine the radial and the in-line engine by using an engine with a great number of cylinders arranged in successive rows. Ménétrier, in fact, has designed such an engine having 28 cylinders - 4 rows of 7 each - with 8 liters (488.2 cu.in.) displacement, thus ensuring a diameter of 600 mm (23.62 in.), instead of 880 mm (31.5 in.) for the Potez 9 Bb, and the obtained output is 400 horsepower.

But there appear two drawbacks:

a) As the power increases, the amount of fuel to be carried increases also, and that is where the already high fuel capacity of the tank constitutes a serious obstacle; the maximum fuselage section would have to be increased, which would no longer harmonize with the diminution of the forward diameter.

b) The engine weight would not increase much, but the bulk of the whole would be excessive. While advocating a multiplication of cylinders, one too often ignores the obligatory equipment, such as the great number of magnetos, carburetors, 56 spark plugs (much smaller, it is true (12 mm (4.72 in.) diameter by 30 mm (1.18 in.) height), the wiring, etc. From the practical point of view, there is little choice between 9 and 14 cylinders, - for radial engines - the studies of the rocker assembly being in any case necessary to lower the frontal surface - and between 6 and 12 cylinders for the "flat" engine.

It seems reasonable to anticipate engines of from 400 to 500 horsepower or 50 to 60 horsepower per liter. Specifically, the Potez 9 Bb operates at a mean pressure of 15 kg (33.1 lb.), and the Renault at 11.5 kg (25.35 lb.). The consumption is 272 g (0.6 lb.) per horsepower per hour with full throttle, and 258 g (0.569 lb.) at 9/10 for the first, against 280 g (0.617 lb.) for the second. The compressor absorbs about 10 percent of the power.

Airplane structure.- Extensive use of variable-pitch propellers resulted in much better take-offs and also brought the landing speed down to reasonable figures. There will be a very great temptation for the designers to reduce the wing area to equal the horsepower.

We believe that, despite the greatest severity of the elimination trials and a much higher gross weight, due to an increase by a good third of the amount of fuel carried and the accrued weight of the power plant, the wing area will remain the same as for this year. One will revise again the distressing take-off conditions, with wing loads raised to 140 and 150 kg (308.65 and 330.69 lb.); the nature of the race tends to demand the utmost from the material, and the utmost is at the limit of possibility - that is, it borders on the zone of danger.

As to landing, the eventual use of wheel brakes will act as a palliative for the imposed 500 m (1,640 ft.).

As to high lifting devices, nothing foreshadows the use of devices other than trailing-edge flaps or split flaps.

The two-pitch propeller, automatic or otherwise, has proved its worth; its use will undoubtedly increase in races. It may be attempted to obtain a pitch change relative to a given law during take-off, so as to take advantage of the maximum performance during every stage of rolling and take-off. The incorporation of such a device in the Ratier propeller should be easy. It simply requires the control, in time function, of the stroke of the piston which controls the blade settings, or, marking out the guide grooves of the followers conformably to a determined curve, if the piston motion is uniform.

It is again to be regretted that no one has attempted to utilize the horsepower of the engine at landing, because of not knowing how. It had already been suggested

to use this power for braking, but it may equally determine a lift. In fact, at speeds of from 120 to 150 km/h (74.6 to 93.2 mi./hr.), the propeller can supply a thrust of some 300 kg (661.4 lb.); enough to balance 50 percent of the tare weight of an airplane. It is merely a problem of pivoting this thrust of 90°. Who will tackle it?

Summed up on the basis of powers of from 400 to 450 horsepower, of from 7 to 8 m² (75.3 to 86.1 sq.ft.) wing area, of from 550 to 600 kg (1,212 to 1,323 lb.) tare weight of airplane, and of from 1,000 to 1,050 kg (2,205 to 2,315 lb.) gross weight, we believe that next year's race will be run off at speeds between 500 and 550 km/h (310.7 to 341.8 mi./hr.).

It is to be hoped that a more equitable distribution of the prizes and the premiums among the competitors of the different countries will draw the attention of a number of foreign entries, so as to lend to this race a truly international character, as the donors intended it to be. Actually the French competitors share in much more important state subsidies than the 100,000-franc prize amounts to.

II. INCIDENTS AND ACCIDENTS

Caudrons 460 and 450

Elsewhere in this report we give the difficulties experienced by Delmotte, Monville, and Lacombe with the operating mechanism of the Charlestop retractable landing gear, as a result of which the Caudron entries all flew in the race with the landing gear "down."

In brief, the hydraulic lifting jacks were not powerful enough to overcome the friction due to the tightening, occurring during the tests, of certain hinge joints, and to internal resistance. The preliminaries were flown with Charlestop locking mechanism installed, while in the race itself the jacks were replaced by push rods.

Caudron 460 (Delmotte).- Delmotte, who pushed his engine toward the end of the race, in his attempt to overtake Arnoux, ran out of oil and was forced to land and abandon the race. His landing in the open was proof of the high lifting qualities of the wings and of the coolness of the pilot. His speed for the first 1,000 km (621.4

miles) in the morning had averaged 387 km/h (240.5 mi./hr.). Delmotte's handicap compared to Arnoux's in the C.450 arose solely from a difference in the cleanness of the landing gear; emergency fairings for Delmotte and well-designed fairings for Arnoux, who had to fly the whole race with landing gear down. (See fig. 1.)

To enable Delmotte to make up in power what he lost in drag, Riffard had loosened his propeller blades 1.5 γ during the rest period, thus making the setting 33.5 γ against Arnoux's 35 γ. (If it had been possible to retract the landing gears the pitch would have been 36.5 γ.) Yet, in spite of this, Arnoux at 2,700 r.p.m., flew scarcely slower than his competitor at 2,900 r.p.m.

Delmotte, while being able to raise his revolution speed by raising his horsepower, consumed, however, more oil than stipulated. He needed only 1 liter of oil - 3 minutes of flying - to finish the course. On his first 10 rounds of the course, Delmotte averaged 365 km/h (226.8 mi./hr.), and for the first lap in the afternoon, both he and Arnoux made the excellent average of 369 km/h (229.3 mi./hr.).

Caudron 460 (Lacombe).- A flat tire obliged Lacombe to start very late. In his desire to make up the lost time, he reduced his speeding up at starting to a minimum. Opening the throttle wide while the oil was still cold caused a leak in the radiator and a delay of two hours, so he decided to withdraw. At 2,700 r.p.m., his average speed was 368 km/h (228.7 mi./hr.) for the first half and 373 km/h (231.8 mi./hr.) for the first three laps of the second half of the race.

Caudron 460 (Monville).- Monville, who finished third, was equally late in starting - although only 15 minutes - due to the delay in mounting the wheel fairings in time.*

---

*The excitement, the last-minute changes, and preparations incidental to a race of this kind generally escape the attention of the public. Here is an illustration: On Saturday, May 26, Mr. Riffard entertained some doubts about the functioning of the retractable landing gears, so at 11 o'clock, before starting for Etampes, he ordered 12 fairings; 6 for the wheels and 6 for the struts. The metal shop worked all that afternoon and all that night. An automobile was pressed into service, rushing the pieces to the track as fast as finished. At 5 o'clock the last piece (Continued on page 9.)

Monville held his engine to 2,650 r.p.m. (instead of 2,900 r.p.m.), confusing the speed at static thrust with the flight speed. Finally, believing he had completed the first half of the race on his ninth lap, he had already lowered his flaps when Mr. Caudron drove his automobile across the line and made him understand his mistake. He made an average of 358 km/h (222.5 mi./hr.) in the first half, and 387 km/h (240.5 mi./hr.) in the afternoon.

Caudron 450 (Arnoux).- The enervation of the mechanics caused Arnoux to lose 30 seconds at the start. Due to an oversight, the propeller was not set at low pitch. This meant stopping the engine, refilling, and starting all over again.

For the Caudron and Renault companies, the day was one of success. In the race the engines were supposed to run at 2,900 r.p.m. or 100 r.p.m. less than maximum, but only Delmotte and Arnoux complied with this rule during the first half of the race.

Massotte, in the Caudron 366 - Régnier 210 hp. engine - flew a remarkably regular race. Starting each time at the timer's signal, he averaged 361.083 km/h (224.4 mi./hr.) and finished second.

Comper "Streak".- He made the ten circuits of the course required in the morning with his landing gear retracted. In the afternoon, however, some trouble developed, and he was obliged to leave the landing gear down. As he considered this to be too great a handicap, Comper withdrew after making some six circuits of the course in the afternoon. (See fig. 2.)

Potez 532 (Détré).- The Potez 9 Bb engine develops on the torque stand 315 hp. at 2,550 r.p.m., and 350 hp. at 2,800 r.p.m. In flight, with due allowance for the dynamic pressure in the air scoop, which may vary between 75 and and 100 g/cm² (1.07 and 1.42 lb./sq.in.)** the maximum may be raised to 365 hp. at 2,800 r.p.m.

Détré should have flown the race at a safe revolution speed; although not publicly given by the Potez company,

---

*(Continued from page 8)
intended for Monville's airplane was finished and rushed by airplane to Etampes, but despite the speed of the mechanics, a delay of 15 minutes was unavoidable.
**See footnote, page 10.

it was such that the engine should have given a little more than two thirds of its maximum - undoubtedly, 260 to 270 horsepower. The speed having been raised 35 horsepower over that of 1933, it was attempted to improve the cooling. The radiator was retained and the number of cylinder cooling fins increased. It was believed that the capacity for heat removal would in some way be parallel with the increase in power, but because of the high speed obtained - 360 km/h (223.7 mi./hr.) - the cooling was actually more effective than anticipated. The oil temperature did not exceed 27° at the engine intake and 42° at the outlet. The oil remained too thin and the lubrication in the crankcase and the cylinders became insufficient. As a result, the Potez 9 Bb operated a greater part of the time under the abnormal conditions usually confined to starting.*

---

*One may imagine that the front of the cylinders was more cooled although the back showed a higher temperature as a result of insufficient lubrication. This fatigues an engine; it is not so much the high temperature of operation as the deformations following adverse heat dissipation. Thus between 150 and 180° temperature, for example, for the two spark plugs of a cylinder, and a much higher mean temperature but the same on both spark plugs, there can be no hesitation in choice; the engine lasts longer in the second case.

**(See page 9) This pressure is difficult to evaluate. Theoretically it may be computed by consideration of $V^2/2g$, but the figure must be corrected by allowing for the performance - of the order of 0.5 to 0.6 - of the intake considered as diffuser and the disturbance entailed with the greater or lesser opening of the gas valve. The Potez company has made no torque-stand tests with air scoops, but it is evident that for speeds in excess of 250 m.p.h., the improvement in overpressure should be of interest and included in the calculations.

Rolls-Royce, in England, have made measurements of the dynamic pressure and studies of air scoops for the "R" 2,400 hp. engine, and so has the Fiat company in Italy for the As.6 2,800 hp. engine. In the torque-stand test of the "R", two 450 hp. engines were used: one to supply the necessary cooling air; the other, the air stream for the scoop at 600 to 700 km/h (372.8 to 434.9 mi./hr.).

Détré had to land 10 km (6.21 miles) from Mondésir during the completion of his second lap; his average speed then was around 350 km/h (217.5 mi./hr.). He had time to lower his wheels, set his trailing-edge flaps, and select a spot to land, which he accomplished without injury.

Mr. Ménétrier thinks that the precautionary instructions given to Detre are responsible for the mishap, and that the engine could have finished the race if the pilot had flown at higher revolution speed. Knowing the power utilized and the speed realized, he should have either retracted the oil cooler or narrowed the annular air exit of the N.A.C.A. cowling.

Potez 533 (Lemoine).- Propeller trouble obliged Lemoine to abandon the race.

The hub of the Ratier automatic propeller on the Potez 533 includes a starting handle. The inside of this handle houses the small diaphragm which causes the deflection of a rubber bladder when the aerodynamic pressure becomes sufficient. As the handle covered the organ substantially laterally, the latter did not record any air flow. It was then decided to lengthen the diaphragm-holder rod, in order to clear the diaphragm forward.* The result of

---

*It was thought at first that the handle forming a cup or well, contained a certain amount of air, obviously overpressed by the speed but stagnant (fig. 1, footnote). The diaphragm undergoing an equal pressure on both sides cannot shift, no matter what the speed. One then visualized a circulation of air around it, so that the pressure on the front would predominate. To this end, 24 orifices of 12 mm (0.47 in.) were made in the wall of the handle, that is, in the cylinder housing the diaphragm (fig. 2). As this did not improve the conditions very much, it was finally decided to lengthen the diaphragm-holder rod (fig. 3) whence, most likely, its fragility.

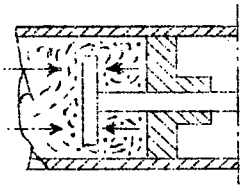

Figure 1.

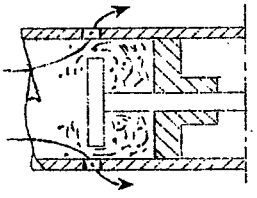

Figure 2.

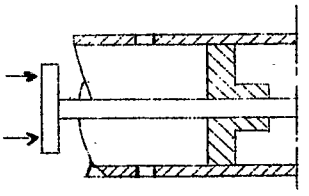

Figure 3.

this lengthening besides the desired response to the pressure, was a certain fragility. It is possible that the diaphragm, slightly distorted during the starts, might have induced small longitudinal oscillations in the rod, followed by accidental starts of the valve and premature deflations of the rubber ball.

At any rate, when Lemoine tried to start in the afternoon for the second half of the race, the propeller of the Potez 533 was set at high pitch. The engine was stopped, the ball reinflated, and the valve put in place again; still he could not get his propeller to remain in the low-pitch position desired for starting. So he withdrew from the race.

During the entire first half of the race, Lemoine held his engine to 300 r.p.m. below maximum.

Supposing that the power curve of the Potez 9 Bb is a straight line - a fact which seems legitimate because if the intake pressure grows as the square of the speed of rotation, the friction, and the loss of charge increase likewise - and assuming that the engine maximum is 365 hp. at 2,800 r.p.m. in flight, it is readily seen that Lemoine actually used scarcely more than 320 to 325 hp. The first 1,000 km (621 miles) had been covered at an average of 368.47 km/h (228.96 mi./hr.).

III. THE CAUDRON ENTRIES

The Caudron company had four entries, developed from the C.360 of 1933 with a Bengali engine: one, the C.450 with fixed landing gear, and three C.460 models, with retractable landing gear.

These airplanes were equipped with 6-cylinder Renault engines, developing 310 hp. at 3,000 r.p.m., and 325 hp. at 3,200 r.p.m. on the torque stand. The propellers were of the Ratier automatic type. Caudron was also represented by the C.366-"Atalante", with 210 hp. Régnier engine (fig. 3), which had been purchased by the Régnier company, who had already taken part in the 1933 race.

Caudron 360.- The general characteristics of the C.360 are: a low monoplane wing of trapezoidal shape, 1.50 m (4.92 ft.) at root; 0.60 m (1.97 ft.) at tip, with round tip; aspect ratio, 6.6; taper, 40 percent; symmetrical

biconvex airfoil set at +2°. The relative thickness tapers from 12.8 percent at the root to 6.4 percent at the tips; the leading edge becomes sharper toward the wing tip (fig. 4). Total wing area, 6.97 m² (75.02 sq.ft.), of which 1 m² (10.76 sq.ft.) represents the part of fuselage between the wings, and 2.97 m² (31.97 sq.ft.), the area of each wing. The drag consists of:

100 C_x min. of wing, 0.8,

100 C_x of landing gear, 0.4,

100 C_x min. of whole airplane (model), 1.77,

100 C_x (computed) due to engine cooling, 0.43,

Total drag, 2.2.

The airplane is fitted with split flaps having a chord 30 percent of that of the wing chord, and controlled conjointly with the fin setting.

It will be remembered that the C.360 airplanes were normally designed for 6-cylinder Régnier engines (Caudron C.366); then, because these engines were not ready, the Renault Bengali of 165 horsepower (Caudron C.362) was substituted for the 1933 race. Thus the Caudron Régnier 366, which finished second, represents, aside from the Levasseur propeller, the airplane which might have become a powerful contender of the 1933 Potez 53.

From the design viewpoint the C.360 has a monospar wing covered with plywood and a fuselage with flat sides. A detailed description was given last year.

Modifications on the C.450 in Comparison with the C.360

The general lines of the C.450 and of the C.360 are the same: They have practically the same wing area, the same wing setting (flight at 100 $C_{x_{min}}$ = 9) and the same fuselage length. The changes effected were as follows:

Wing structure.- Two spars to accommodate the retractable landing gear, whereas the landing gear of the C.450 is of the fixed type. This modification involved a redesign of the wings as well as of the fuselage.

The ailerons, which had proved extremely sensitive in 1933, had a smaller area. Over each wing the fraction of the span corresponding to the split flap, is 60 percent against 40 percent for the aileron, while in 1933 the proportions were, respectively, 54 percent and 46 percent for the trailing-edge flap of the aileron.

Mr. Riffard did not attempt to provide a simultaneous aileron control, since the thinness of the airfoil already made it difficult to house a single aileron control on the inside.

The split flaps proved remarkably efficient on the symmetrical biconvex airfoils. With such airfoils, in fact, having a straight center line, the flap setting entails a much greater curvature change of this median line than with an airfoil that is already incurved; the C_z is, in particular, a function of the mean curvature. Besides, the split flaps interfere less with the air stream at the tail than trailing-edge flaps.

It may be noted in passing that the wind tunnel should give about 20 percent less lift and much higher drag for the thin airfoils. Mr. Riffard stated, in fact, that the actual speed attained by his entries exceeds the anticipated speed, and that the setting in flight (estimated by eye, it is true), is less than the calculated setting. The C.450 and C.460 flew therefore at a much lower C_x than the wind-tunnel data stipulated (fig. 5).

The position of the resultant established in the wind tunnel, on the other hand, does not correspond to the actual position. The airplane had been centered at 30 percent. Counting, as customary, with an aerodynamic resultant located at 25 percent from the leading edge, the stabilizer was given a certain setting in order to make it support part of the load. Then one was obliged to reset the stabilizer to zero again, as a result of which the center of pressure was shifted beyond 25 percent of the chord.

Lastly, the tip sections of the wings of the C.450 and 460 had been modified (sharper leading edge) in order to reduce the lift and to minimize the vortices on the wing tip.

Fuselage.- The width and height were reduced 50 mm (1.97 in.), 25 mm (0.98 in.) on each side. The portion lying between the wings was consequently narrowed 25 mm,

leaving a total area of 7.50 m^2 (80.73 sq.ft.). The total wing area of the C.460 was, thus, 6.97 m^2 (75 sq.ft.) -0.07 m^2 (0.75 sq.ft.) = 6.90 m^2 (74.27 sq.ft.) (fig. 6).

Drag reduction.- The total drag of the C.360 may be estimated at 1.77, of which 0.8 is attributable to wings, 0.4 to fuselage, wheels and fairings, etc.; for the C.450 it was 1.6.

The gain of 0.17 percent over that of the C.360 was the result of the following refinements:

8 percent smaller maximum diameter of fuselage.

16 percent smaller maximum diameter of tires: 420 by 180 mm instead of 500 by 150 mm (16.54 by 7.09 in. instead of 19.69 by 5.9 in.).

Surface oil cooler in place of cooler with separate air intake.

Some refinements on the wing tips.

As concerns the loss of charge resulting from the cooling air circulation in the fuselage, it is not as high as the increase in power seemed to indicate.

As the total horsepower had been raised from 160 hp. to 310/325 hp., it should have been necessary to double the air scoops for an identical speed (330 km/h = 205 mi./hr.) but, as the anticipated speed was higher, one did, theoretically, at least - the air feed being proportional to it - increase the sections only about 45 percent.

Now as these sections had been increased only 20 percent, the cooling at 390 km/h (242.3 mi./hr.) was more than ample, as already pointed out, on the occasions of Delmotte's and Massotte's speed records over a 100 km (62.1 mile) track, December 20, 1933 and January 7, 1934 (L'Aéronautique, No. 175, page 291). The fins seemed to be better "wiped" by the air at high speed. The cylinder temperature was very low; it ranged between 110 and 120°. This is very encouraging for it brings the design of much more powerful engines so much closer within the realm of actuality.

Caudron 460.- The three C.460 airplanes are identical with the C.450 except for the Charlestop retractable land-

ing gear. The added weight is about 25 pounds; tires, 420 by 150 mm (16.54 by 5.9 in.) (fig. 7).

The increased drag, which allows the retraction of the landing gear, amounts to 4 percent. The total drag, not including the cooling, drops for the C.450, from 1.6 to 1.2; with the cooling, it should be 1.65 to 1.70. (See figs. 8, 9, and 10.)

Caudron Equipment

Caudron C.450 and C.460.- Renault 310 hp. engines: Messier shock absorbers on the C.460 and Charlestop shock absorbers on the C.450; Palmer tires and wheels, Baritaud fuel tanks, K.L.G. spark plugs, Jaeger tachometer, Amyot oil-pressure gages, A.M. pumps, Lévy fire extinguishers, C.I.M.A. Petroflex tubing, Ratier automatic propellers, Aviorex safety belt, Badin-Aéra flight indicator, Jaeger clocks, Shell gasoline (special), and Castrol oil.

Caudron C.366.- Régnier 210 hp. engines: Charlestop landing gear, Goodrich tires, Lodge spark plugs, Morel Nilmélior magnetos, A.M. pumps, C.I.M.A. Petroflex tubing, Bendix-Stromberg carburetor, Amyot oil thermometer and manometer, Jaeger tachometer, Levasseur variable-pitch propeller, Morel-Krauss compass, Badin-Aéra flight indicator, and Jaeger clock.

Caudron C.430 and C.530.- These are modern versions of the C.450 and C.460, incorporating split flaps and controllable propeller. The landing gear is of the cantilever type as on the C.450.

Caudron C.430 - "Rafale-Compétition".- The wing (9 m^2 (96.9 sq.ft.)) is an enlargement of the C.450, with the same aspect ratio (6.6), but the airfoil has a higher lift. The maximum speed was 325 km/h (202 mi./hr.) and the cruising range, (280 km/h (174 mi./hr.)) is 620 miles. The Bengali Sport engine develops 150 hp. at 2,400 r.p.m.

Caudron C.530 - "Rafale-Sport".- This airplane has a wing area of 12 m^2 (129.2 sq.ft.), resulting in 34 kg (75 lb.) greater weight: 7 kg (15.4 lb. for the tail, and 25 kg (55.1 lb.) for the wing. The power plant is the same as in the C.430. Maximum speed, 300 km/h (186.4 mi./hr.) and a cruising range of 1,000 km (621.37 miles) at 260 km/h (162 mi./hr.). The 12 m^2, 9 m^2, and even 7 m^2 (75.3 sq.ft.) wings are interchangeable.

Caudron C.460.- A Charlestop retractable landing gear is being installed in the C.460, with the intention of breaking the speed record of 100 km (62.1 miles) and 3 km (1.86 miles) (431.65 and 498.8 km/h = 268.2 and 310 mi./hr.). The first record, held by Delmotte, was established on an airplane with fixed landing gear and an engine developing only 310 horsepower. With landing gear retracted and the possibility of drawing some 25 horsepower additional from the engine, speeds of from 480 to 490 km/h (298 to 304 mi./hr.) for 100 km, and from 505 to 510 km/h (313.8 to 317.0 mi./hr.) for 3 km, are anticipated.

IV. COMPER "STREAK"

The "Streak", entered by Flight Lieutenant Comper, did not have much chance in the race (fig. 11). Fitted with a Gipsy Major of but 6.125 liters (373.8 cu.in.) capacity, and 145 horsepower, it had a wing area of more than 1 m^2 (10.76 sq.ft.) greater than that of the Caudron entries. The "Streak" really could pass rather for a fast single-seat sport airplane: open cockpit, wheels partially retractable, tail skid not faired, aileron control by rods and levers - all these factors reduce the speed. Then, it has no flaps nor variable-pitch propeller, but is fitted with wheel brakes, and it has a cruising range of 1,600 km (994 miles).

Two excellent descriptions of the "Streak" have been published in The Aeroplane, April 18, and in Flight, April 19, 1934.

Equipment.- Dowty shock absorbers, Dunlop wheels and tires, Bendix brakes, Fairey propeller, Thomson-Boothby cowling clips, K.L.G. spark plugs, Smith instruments; turn-and-bank indicator, and a Reid and Sigrist pitch level.

V. POTEZ 532 and 533

The Potez Company had two entries, developed from the Potez 53, the winner of the first Deutsche de la Meurthe race: the 532 (fig. 12) and the 533. The reader is referred to L'Aéronautique, July 1933, pages 151-154, for a description of type 53. The 1933 power plant was a Potez 9 B, developing 310 horsepower. The corresponding figures for the 1934 models are 365 horsepower at 2,800 r.p.m.

Potez 532.- The type 532 is similar to last year's model, but has been cleaned up in an attempt to gain a few miles per hour. The wing area has been slightly increased, from 7 m^2 (75 sq.ft.) to 8 m^2 (86 sq.ft.). The wing tips are thinner, the span was increased from 6.65 m (21.8 ft.) to 7.20 m (23.62 ft.). The fuselage modification consisted in lengthening the elliptical section rear portion, making the total length 5.90 m (19.3 ft.) instead of 5.40 m (17.7 ft.) (figs. 13 and 14).

Wheels with 500 by 150 mm (19.69 by 5.9 in.) tires were substituted for the 420 by 180 mm (16.54 by 7.09 in.) used last year. This has enabled the wheels to be more completely lodged in the wing. The retraction is practically complete, except for part of the fork and it was faired in. The cabin windshield was lengthened in the front. The roof of the cabin is held by two shock-absorber cords hooked over two half pulleys; a slight pressure with the thumb releases it. The ventilating pipe of the pilot's cockpit is faired in by a flat rib extending from the windshield forward, and empties above the N.A.C.A. cowling. The pilot can regulate the supply of air by a valve. In last year's model the fairing of the pilot's cockpit did not extend to the fin. Trailing-edge flaps have been fitted between the fuselage and the ailerons. (See fig. 15.)

Potez 533.- The 533 resembles in its general lines the 532 model, but has a slightly smaller wing area, a greater power plant, and a Ratier automatic propeller. Compared with the type 53 of 1933, the modifications are as follows:

Wing.- Increased wing area, from 7.20 m^2 to 7.60 m^2 (77.5 to 81.8 sq.ft.), and aspect ratio from 6.65 m to 7.10 m (21.8 ft. to 23.3 ft.). Full-span ailerons and flaps, newly designed wing fillets, decreased relative thickness at wing tips (fig. 16).

Fuselage.- The fuselage is longer than in 1933, but less than for the 532 model; 5.72 m (18.77 ft.) instead of 5.40 m (17.7 ft.). Its diameter was reduced by 50 cm (19.7 in.) (fig. 17).

Aft of the rear longeron the construction is of the monocoque type, which makes for better wing fillets and fairings, as well as a reduction in size of the successive couples. The pilot's seat was dropped to the bottom of the fuselage, which puts his head lower. The 500 by 150 wheels allow a more complete retraction in the wing.

Wind-Tunnel Tests of Ring Cowling (figs. 18-20)

The Potez design section tested three different fuselages (Nos. 1, 2, and 3) (fig. 18) with five types of ring cowling (cowls A, B, C, D, and E). Outwardly, C is identical with B, but it is fitted with inside baffles. Each cowl, aside from its identifying letter, is defined by its length-diameter ratio L/D. To illustrate: the three A1 points in figure 17 give the results with fuselage No. 1 and cowling A; for the A1, farthest to the left, the length of the cowl equaled 45 percent of its diameter; for the middle point, 60 percent, etc. Forty some tests were made, of which only a few are shown. The mean drag T (in grams) is plotted against the length-diameter ratio L/D for a 10 m/s (32.8 ft./sec.) tunnel speed. The equation of this straight line is $T = 1.04\ T_o\ (4.5 - 3.5\ \frac{L}{D})$. $T_o = 23.6$ g (0.052 lb.) represents the drag of the fuselage alone. It is seen that the drag becomes less as the nose of the cowl becomes longer.

Length of cowl.- With very long nose cowls, the complete fuselage and engine cowled in reveals practically the same drag as a well streamlined solid without inside circulation (figs. 21 to 24). In particular, the closing of the entry of the cowl, as well as its annular exit opening, does not reduce the drag; the circulation of the air inside does not appear to set up any additional drag with a very long nose cowling. Now the turbulence of the flow around the cylinders, etc., represents quite a drag. If the latter does not appear, it is because the circulation around the profile of the cowling - the circulation which exists only when the flow is produced on contact of the two sides of the wing - must give an aerodynamic reaction R, directed toward the outside, whose horizontal component, having the sense of a thrust, balances within narrow experimental limits the drag due to inside roughness.

Baffles.- The drag of sufficiently long cowlings manifests itself the same, regardless of the design and position of baffles, so that the selection of baffles needs only to be governed by the cooling requirements. This result, at first surprising, is implicitly contained in the conclusions of the preceding paragraph, conformable to which the closing of the entrance and exit openings of the cowls does not lower the drag, provided the nose of the cowl is long enough. The internal baffles may be considered as more or less efficient shutters.

The above interpretations as well as many other interesting statements were given by Mr. Jarry, Director of Research of the Potez Company, during a conference held last May at Lille, on the occasion of the inauguration of the Institute for Fluid Mechanics.

Body-Wing Fillets of the Potez 532 (figs. 25 and 25 A-E)

The body-wing fillets appear to be interesting only for flight at high angles of attack. Let us compare (fig. 25A) the polars of an airplane with thick monoplane wing obtained with and without fillets: They are substantially coincident in the zone AB at low angles of attack, which correspond to high speed, but they diverge for high C_z.

The polar without fillet has a comparatively low maximum C_z with a sudden drop in lift; contrariwise, the polar with fillets reaches significant C_z with a stretched-out maximum. In certain types of airplanes the fillets are therefore of importance only for flight at large angles, particularly at landing.

So far as speed is concerned, these fillets are rather an impediment: They must be visualized as replacing in each section an airfoil well defined by the more or less round contours, for which the wind tunnel has heretofore no recognized place of satisfactory streamlining. The Lockheed company, for instance, has stated that its twin-engine Electra is almost 3 miles per hour faster without, than with fillets. This may equally be the case with the Potez entries, which fly at $C_z = 17$ percent. The following may aid in understanding the operating mechanism of fillets.

Take a wing alone with a spanwise lift distribution as shown by the elliptical curve C of figure 25B. The insertion of a fuselage in the middle of the wing disturbs this distribution and gives a curve of interrupted distribution - perhaps of the shape of C' (fig. 25C). The result is a loss of lift substantially proportional to the negatively shaded area - a loss of lift which is more annoying at landing and at take-off than at high speed, where C_z is always superabundant. A well-designed fillet re-establishes the C_z curve and transforms it somewhat as C" (fig. 25D).

Wing Fillets of the Potez 533 (figs. 26 A-E)

One important conception for the design of fillets is that of divergence. The phenomenon is particularly noticeable with conical fuselages, such as the Potez. The air filaments, striking the edge of the cowling, do not endeavor to pass along the fuselage, despite the annular blast produced by the exit ring. On the contrary, they diverge in profile (fig. 25E) and in plan (fig. 26A) in such a way that the rear of the fuselage is immersed in a disturbed zone. And it is this zone which, when becoming enlarged toward the tail, sets up, on contact with the tail surfaces, the so-called "tail buffeting."

This divergence recalls the separation of flow noted in a diffuser whose angle on the top exceeds 7° (fig. 26B). It is said that if this coning angle is reduced to 7° by resorting to filling volumes, the separation no longer occurs (fig. 26C). It is the same in the case of the airplane. The elimination of the zone of disturbance with a fillet (shaded areas in figs. 26D and 26E) obliges the air stream to hug the wing roots without separating.

A well-designed fillet should provide for divergence in plane and profile. A trailing edge in dihedral merely seems to compensate the divergence in plane only, whereas a rounded trailing edge also takes into account the divergence in profile. It is pointed out that latest researches attempt to consider also the twist of the propeller slipstream. Logically, the two fillets of a wing should be dissymmetrical for a single-engine airplane.

After this digression, we return to the description of the Potez 533. Referring to the fuselage, the longitudinal and plan forms, connected by reference lines carrying the number of transverse sections from 0 to 6, are shown in figure 21: at left, transverse sections with longitudinal sections A,B,C (vertical) and D,E,F (horizontal); at right, diagram for drawing frames 3 to 6. Section 0 is a circle with 840 mm (33.1 in.) diameter, the other being formed by four circular arcs tangent two by two. For example, section 1 consists of the joining of a circle of radius R with two circular arcs of radius $r = 365$ mm (14.37 in.); section 2, of a circle of radius R' with two circular arcs of $r' = 180$ mm (7.09 in.). The plotting of the arcs for sections 3 to 6 is indicated by the figure at the right and by the rear part of the plan view. Five types of fillets were tested in the wind tunnel for the Potez 533.

Tail surfaces.- Slightly reduced as a result of the lengthened fuselage, so that the moment remains the same.

Power plant.- The oil cooler under the fuselage was replaced by a cooler of welded aluminum tubes mounted in front of the cylinders and forming a deflector. A long-nose cowling. The alterations enabled a 2 percent reduction in drag, thus resulting in a gain of 10 percent compared with the 53 of 1933, despite the more stringent take-off and landing tests.

Equipment of the Potez 532 and 533

Power plant.- Type 9 Bb 350 hp. engine; A.M. pumps, Zénith carburetor, C.I.M.A. Petroflex tubing, Aivaz oil cooler, R.B. Voltex magnetos, Avia spark plugs, La Pyrométrie Industrielle type engine thermometer, Amyot oil-pressure indicator, Bourdon manometer, Levasseur fixed pitch propeller on the Potez 532, and a Ratier automatic propeller on the 533, Lévy fire extinguisher, Messier oleo-pneumatic shock absorbers, Goodrich wheels and tires, Avionine-Duco dope, Badin flight indicator, and Aéra compass (figs. 27 to 29).

VI. CHARLESTOP RETRACTABLE LANDING GEARS ON THE C.460

They were of the fork type. Each fork, mounted on universal joint near the front longeron, is made to pivot rearward and upward by means of a lower lifting jack V_i (fig. 30) and upward and toward the center about an axis parallel to the flight direction by means of an upper lifting jack V_s. The first rotation clears the wheel during retraction, the second retracts it into the wheel well. The jacks are operated by oil pressure (fig. 31). After retraction the openings are partly closed by the flanges carrying the landing gear and partly by the automatic fairing plates.

The Charlestop system comprises (fig. 30) an oil pump P which aspires the oil at a into the tank R (short arrows) and discharges it in r - middle connection of distributor D - when valve r' is closed, or in cylinder B when r' is open. In principle, the pump serves only to fill the cylinder B. The cylinder B constitutes the energy accumulator of the system. A free piston divides it into two chambers: one receiving the oil under pressure from the pumps; the other being filled with compressed air.

The mechanic raises the pressure up to 100 kg/cm², which requires from 15 to 20 minutes of pumping.

The cylinder is large enough for two raising and lowering operations, after which the pressure drops to 50 kg/cm² (701.2 lb./sq.in.), which still leaves a safe margin of 10 kg/cm².

The distributor D, mounted on the tank, has three connections: r, for the pump pressure (when r' is closed), or the cylinder pressure (when r' is open and the pump not operating), and d and e connecting with the oil intake ports: d', for lowering, and e', for retracting, on the lifting jacks. Tank R contains fresh air.

Method of raising and lowering.- Only a simple turn of a valve is necessary after the cylinder has been filled.

Retraction.- Move the handle of distributor D into position e, which connects e with r, then open r'. The oil under pressure flows back from B into the pipes (full lines following the long arrows in continuous dashes). The pressure reaches the jacks V_i and V_s but it first actuates V_i because its piston is larger than that of V_s; the wheel itself has a tendency to tip rearward under the effect of the relative wind. Lastly, the weight and the arms of the levers are such as to require less force to move V_i than V_s. Thus V_i absorbs the whole energy during the first instants of pressure expansion in the cylinder B. V_i contracts 98 mm (3.86 in.), which takes about 3 seconds of a total of 5 seconds, during which the maneuver lasts, then it stops without being locked.

Subsequently, the whole pressure is available for V_s which, strictly speaking, does the raising. The oil, expelled from the chambers of the jacks, flows into the pipes (heavy dashes), reaches distributor D at d, and flows back into the tank. After raising, all connection between cylinder and jacks is interrupted by closing r'.

No mechanical locking has been provided for the raised position. Ordinarily the oil pressure holds the wheels in that position, but if, after a certain time, the pressure should drop, as shown on the pressure gage in the cockpit, a few strokes of the pump suffice to correct it. The pressure should be kept between 30 and 70 kg/cm² (426.7 and 995.6 lb./sq.in.).

Lowering.- Set distributor handle to d and open r'. The oil flows from B to D and passes through the previous lines in opposite direction (long arrows with dashes). Upon reaching the end of extension, the jacks are automatically locked. The pilot is advised of the locking by four signal lights on the instrument board - one light for each jack.

Description and Operation of Lifting Jacks

We only describe the upper lifting jack V_s (fig. 31), since it is identical with the lower jack V_i except for the locking of V_s after retraction. The jack consists of two rods T and T'; T' is mounted in T by a screw v with four threads of 15 mm (0.59 in.) diameter and 20 mm (0.78 in.) pitch. Each rod carries a guide key: K, for T, K' for T'. K is of sufficient length to prevent T from turning, while K' is designed to become free at the end of the contraction to allow locking. A plunger P integral with T divides the inside of V_s into two chambers, C and C', which alternately receive the pressure of the oil: connection e' for raising, and d' for lowering. T' actuates the arm which prolongs the landing gear fork (b in fig. 30) by means of stirrup c, which forms the end of T".

Retraction (extension).- The oil, upon reaching e', enters chamber C and compresses P, while the oil in C' flows to the distributor and tank via d' and d. T moves to the right without turning. T', locked lengthwise in V (fig. 31, right, below), cannot turn round itself; it is screwed into T, through v, until seated in the bottom of the rod after 5 mm travel.

When T' seats in T, T' has turned 90°, and V, which also has turned 90°, is in free position. T' being at this instant integral with T, is pushed toward the right. V detaches from the opening of its seat and key K' slips in its guide (fig. 31, left, bottom). There is no blocking at the end of the stroke. The pressure of the oil balances, as stated previously, the weight of the landing gear.

Lowering.- The oil under pressure enters through d' into C'; since T' cannot turn (K' guided), T and T' pull the whole toward the left. At the instant K' leaves its guidance, V is before its seat. Since T may slide

back but not turn, whereas T', stopped longitudinally by V, may only turn while sliding back, V unscrews 5 mm (0.2 in.) and V locks at 90°, which closes an electric contact with the mass on key K' in the last 5° of rotation (see section YY, fig. 31, top) for posting on the instrument board.

The advantages of the Charlestop oleo-pneumatic drive are as follows:

Possibility of effecting complex movements, difficult to execute by purely mechanical means. The landing gear is eclipsed rearward and upward toward the center; both operations are distinct.

Quickness of maneuver: 5 seconds for raising and 3 seconds for lowering in the C.460.

Simplicity of drive. The pilot needs to make only one movement for raising or lowering, namely: open a valve.

The weight of one upper lifting jack V_s, is 2.5 pounds. The increased weight, due to the retraction system, is about 27 pounds.

The Charlestop retractable landing gears were, as a matter of fact, not mounted on the three C.460 airplanes It appears that the hinges A (fig. 30) had flattened out during the tests on the ground, resulting, during the rotations of the forks, in stresses not foreseen in the design of the jacks and consequently, in danger of jamming while being operated.

The chances of seizing would have been even less if the liquid employed in the lifting jacks had had adequate lubricating power. In fact, the pipe lines were filled with an oil used for brake gears - an oil for which, above anything else, a low freezing point is desirable.

The added stresses on the jacks because of the hinges A, thus augmented the friction in the pistons and the multithreaded screws, excessively. To replace the hinges and to overhaul the whole oleo-pneumatic system on the eve of the race, was impossible. Hence the Caudron and the Charles companies very wisely decided to remove the jacks altogether and substitute push rods. The makeshift fairings were decided upon a few hours before the race. The speed of the C.460 was lowered about 35 to 40 km/h (22 to 25 mi./hr.) as a result.

The last-minute elimination of the retractable landing gears on the Caudron entries, has given rise to a certain deception: the average speed of the winner had to be a good 100 km/h (62.1 mi./hr.) faster than that of Détré in 1933.

The Charlestop company employed a novel system of signals for showing the pilots of the C.460 the position of the landing gears. Two square 1-meter panels were placed near the finishing line: a panel for each wheel. The code was as follows (fig. 32):

White squares:	landing gear down
Red squares:	landing gear raised
Green squares:	both halves half down
1 white and 1 red:	wheel down on green side and raised on red side.

This novel idea may be employed more frequently, even on airports, once the retractable landing gear has come into more general use.

VII. THE RATIER AUTOMATIC PROPELLER

The outstanding feature of this propeller is the ingenious solution of anchoring the blades by helicoidal ball bearings.

The centrifugal force tends to pull the blade out of its socket. Consequently, if the blade root is not mounted on a socket, as with an ordinary ball bearing, but on a thread - and even by screwing on balls so as to reduce friction - the thread forces the blades to turn around themselves. This turning tends to raise or lower the pitch, according to whether the screw turns in one or the other direction. Besides, the blade obeys the pivoting constraint more readily as the thread becomes more vertical.

The centrifugal force, aside from its tendency to pull out, which is a function of the total mass of the blade, sets up a so-called "blade torque," which tends to rotate the blade about its own axis - a torque which depends upon the distribution of this mass and therefore on the blade design, the curvature of the neutral axis, etc.

This torque has a well-defined direction. To employ

an aerodynamic simile: The propeller tends to "feather" from the mass point of view; that is to say, at static thrust it tends to bring the mean plane of its blades into the plane of rotation, and in flight, to dispose it probably, in the plane tangent to the helicoidal path described. The torque tends to lower the pitch.

Ratier's method of helicoidal anchoring, has enabled him to obtain, with an appropriate direction and pitch of the thread, components equal in direction of this thread and opposite to the centrifugal force and the torque of the blade (fig. 33). The result is - we shall disregard the secondary factors: aerodynamic reactions, etc. - that the propeller is in a sort of neutral equilibrium, and the rotation of the blades about their own axis may be controlled with little effort, whether for raising or lowering the pitch.

The mounting of balls between the paths which constitute the thread give the helicoidal anchorage an aspect of mechanical refinement, but does not alter the principle of functioning.

In the original Ratier propeller the pilot controlled the pitch setting by means of a set of gears and racks. This was subsequently changed to an electric motor with high-reduction-gear ratio and finally, to automatic control to relieve the pilot of all responsibility (fig. 34).

The number of parameters from which automatic control may be obtained is considerable: r.p.m., power, attitude, and speed. One may, conceivably, design an automatic control which allows for these three factors, but it probably will involve disturbing complications. But fortunately, the problem lends itself to modifications. Thus, for the airplanes entered in the race, the altitude and the r.p.m. were assumed constant, leaving only the speed as significant factor. The sensitive speed element of the Ratier propeller is an anemometric plate or diaphragm. Upon reaching a certain speed, a spring located in the hub is released and causes the pitch to increase.

Figures 35A-C illustrate the Ratier propeller. Figure 35A is a sectional view; the portion to the right of ZZ conforms to the design, while that to the left is slightly diagrammatical. C is the support cover of the rubber bag, E, the control screw for the low- and E', for the high-pitch setting, K, the key, O, the case housing

valve V, P, the piston, R, the spring, V, the rubber bag, b, the knob-regulating diaphragm π, e, the shoulder of the blade root, j, the clearance of the slide block in its passage opening, and p, the valve tip.

The design is easy to read. The blade root, of duralumin, is seated in a steel collar in which the thread forming one of the ball races is cut; the screw is single-threaded. At the base of the root is the roller bearing for centering the blade in the hub; S denotes the serration of the end locking sleeve.

The number of balls for the 300 to 350 horsepower engines of the Coupe Deutsch type is 435 per blade as compared to 850 in the first Ratier propeller of 3.10 m (10.17 ft.) diameter, designed for a 450 horsepower engine. For the Potez 9 Bb engine, the outward pull on end blade is 15 metric tons (33,069 lb.) at 2,500 r.p.m., or a pull of 34 kg (75 lb.) per ball. This load may be increased to 50 kg (110 lb.) or even more, without revealing any sign of flattening or jamming. In the 310 hp. Renault, the load also is of the order of 15 tons, but at 3,000 r.p.m. (1.80 m (5.9 ft.) as against 2.10 m (6.89 ft.) diameter). The speed could be raised to 3,500 r.p.m. without adverse effect on the 3.96 mm (0.156 in.) balls.

The mechanism and operation of the automatic control are as follows (figs. 35 and 36):

The spring R tends to push the piston P forward, but a rubber bag V inflated with air to a pressure of 7 to 8 kg/cm² (99.6 to 113.8 lb./sq.in.) balances the tension of R. The back of P is a slide in which two slots (one for each blade) are cut, in which the shoulder e on the blade root, engages.

Actually, shoulder e is not cut directly in the root, but in a piece of steel keyed on to the root by key K; likewise, e does not engage directly in the slot (fig. 35C) but by means of a bronze ring not shown. It is seen that when P and its slot shift parallel to the thrust axis the shoulder e and the blade are constrained to rotate.

The slide fits with a certain clearance (fig. 35C), but is laterally guided by two adjustable bronze studs.

This device, by slightly offsetting the slot, enables variations of the initial blade-setting angles and also gives a working clearance. This diaphragm π is an easy fit on the operating cylinder O. When, as a result of the speed, the dynamic pressure acting on π is sufficient, knob b - integral with π - bears on needle p of (an ordinary automobile valve) v. V is deflated, P moves forward, and the pitch increases.

To open v requires a dynamic pressure estimated at 50 g per 1 kg/cm² pressure in V plus a fixed margin of 100 g per 1 kg/cm² to allow for friction. For V = 7.5 kg/cm², it requires a pressure of 475 g per 1 kg/cm², and for 8.5 kg/cm², one of 525 g per 1 kg/cm² on π. The diaphragm π is round and has a diameter of 65 mm (2.56 in.). When V is inflated to 8.5 kg/cm², the speed for change to high pitch should be about 230 to 240 km/h (143 to 149 mi./hr.). However, it is difficult to give an exact figure as the flow about the diaphragm π is not accurately known.

The nuts E and E' (fig. 35A) serve as piston stops. By tightening E in the direction of the solid-line arrow, the pitch can be slightly lowered, while by unscrewing E' in direction of the dashed-line arrow, the pitch may be raised. E' is fitted on the end of cover C, which fits inside the hub; C serves as supporting cover or holder for the inflated bag.

Figure 36 shows the disassembled pitch mechanism slightly different from the elementary figure 35. Reading from left to right: E' is the adjusting nut for high pitch; B, the stop limiting high-pitch increase (it serves for retarding E'); E, the nut limiting low-pitch decrease; P, the piston with one of the diagonal slots in which the shoulder of one of the blade roots engages; R, the return spring, which returns the blades to high-pitch setting; r, the spring clip of piano wire, holding the diaphragm D in place; c, the valve-actuating cap (same as knob b in fig. 35A); C, support cover of inflated bag; D, the disphragm (or anemometric plate π, on fig. 35A) from which c projects; O, the operating cylinder housing the valve; V, the rubber bag inflated to 7 or 8 kg/cm² (99.6 to 113.8 lb./sq.in.).

The following table gives the characteristics of the different variable-pitch propellers used in the race.

Characteristics of the Variable-Pitch Propellers

	Diameter	Low pitch[1]	deg.	r.p.m. at static thrust	High pitch[1]	deg.	r.p.m. in flight	Weight
	m	m	γ		m	γ		kg
Potez 533 (Lemoine); Potez 9 Bb engine, 350 hp. at 2800 r.p.m., on torque stand; Ratier propeller[2]	2.10	1.50	24	2200	2.40	36	2500[3]	25
Caudron 460 (Delmotte), (Lacombe), (Monville); Renault engine, 310 hp. at 3000 r.p.m. on torque stand; Ratier propeller	1.80	1.60	26	2650	2.40	36[4]	2900	21.500
Caudron 366-"Atalante" (Massotte); Régnier engine, 217 hp. at 2400 r.p.m. on torque stand; Ratier propeller[5]	1.90	1.50	24		2.45	36.5		21.500
Levasseur propeller....	1.95		24.5	2300	2.75[6]	39.5	2400	22.750

(m x 3.28038 = ft.) (kg x 2.20462 = lb.)

[1]The pitch for the Ratier propellers is that measured (0.60 m (1.97 ft.)) from the thrust axis.
[2]The pitch for the Ratier propellers considered best by the flyers, but may have been changed by the Potez company for the race
[3]During first flight only.

For 4,5,6, see footnotes, page 31.

Five entries used the Ratier automatic propeller (fig. 37), one of which was the winner. They functioned excellently, but for Lemoine's Potez 533, in which the diaphragm π became distorted during a start in the second half of the race and caused his withdrawal from the race.

The Ratier company is at present engaged in perfecting a positive pitch setting drive using compressed air.

VIII. THE LEVASSEUR MANUALLY OPERATED PROPELLER

The Levasseur propeller intended for the Régnier engine was required to absorb in flight, 210 to 215 horsepower at 2,400 r.p.m.; the predetermined diameter was 1.95 m (6.4 ft.) (fig. 38).

(Continued from page 30.)

[4]The 36γ pitch corresponds to a speed of 430 km/h (267.2 mi./hr.), which the airplane would have reached if the retractable landing gead had functioned properly. In fact, the propellers of the two C.460 airplanes of Delmotte and Monville - which should have been flown at between 380 and 400 km/h (236 and 248.5 mi./hr.), turns not included - were, for the first half of the race set at 34γ, the same as that of Arnoux. For the second section of the race, Delmotte's propeller was reset to 33.5γ, in order to enable the pilot to increase the revolution speed. Thus the result is substantially as follows (the mean speed being that figured for one lap):

C.460, landing gear retracted	420-430 km/h (261-267 mi./hr.) at 2900 r.p.m., setting 36γ.
C.450, fixed landing gear, well faired	385-395 km/h (239-245 mi./hr.) at 2900 r.p.m., setting 34γ.
C.460, fixed landing gear, makeshift fairing	375-385 km/h (233-239 mi./hr.) at 2900 r.p.m., setting 34γ and 385-395 km/h (239-245 mi./hr.) at 3000-3050 r.p.m., setting 33.5γ.

[5]A Ratier automatic propeller had been prepared for the Caudron 366, Régnier engine, for which, however, a Levasseur controllable type propeller was substituted at the last minute.

[6]Constant pitch propeller.

A small scale model 1.5 m (4.92 ft.) in diameter was tested in the large wind tunnel of the Issy-les-Moulineaux laboratory (see graph, fig. 40). The propeller used for the race is now being tested in the same tunnel. Comparison of the results of tests made under identical test conditions should yield some interesting information on scale effect. In addition, distortions are to be investigated by the method developed by Commandant Ledoux.*

The model had a constant pitch of 2.25 m (7.38 in.), which gave a blade setting angle of 35° 37' for the section at 0.5 m (1.64 ft.) from the hub. The pitch ratio was 1.5. It was run at 1,700 r.p.m., the tunnel speed V being changed up to 70 m/s (229.7 ft./sec.), this enabling variation of $\gamma = nD/V$ from 0 to 1.65. The maximum efficiency of 0.8 was reached with $\gamma = 1.15$.

Assuming a rate of revolution in flight of 2,400 r.p.m., the optimum speed for this setting is:

$$V = 1.15 \times 40 \times 1.95 = 324 \text{ km/h } (201 \text{ mi./hr.})$$

As the speed of the airplane in the race was 360 km/h (223.7 mi./hr.), it may be inferred that the efficiency of the propeller exceeded 80 percent, or that the power developed in flight actually exceeded the stated value.**

The propeller was again tested at 1,700 r.p.m., but with 1.40 pitch-diameter ratio, equivalent to a blade setting of 34° for the section at 0.50 m (1.64 ft.) from the axis. This time the efficiency rose to 83 percent for $\gamma = 1.10$.

The τ and χ curves in figure 40 revealed a solution of continuity or separation which must be taken as revealing a change in the conditions of flow for a certain value of V/nD. In other words, for a certain critical γ

---

*Study on propeller distortions: Publications scientifiques et techniques du Ministere de l'Air, no. 15. Se abstract, L'Aéronautique No. 167, page 37 of L'Aérotechlique.

**The first results of the tests made at the Issy-les-Moulineaux, on the propeller of the Coupe Deutsch, revealed an 83 percent efficiency. The laboratory, however, guarantees this efficiency only within 2 percent.

two different efficiency figures may be obtained, depending upon the initial conditions, the turbulence, etc. This γ value does not refer to high speed but may occur under conditions of climb.

The propeller for the race was designed with constant pitch of 2.75 m (9 ft.); its pitch-diameter ratio in the race was 1.5. A 1.0 pitch ratio would have been preferable but it would have called for either a higher revolution speed - which the engine did not allow - or a reduction in diameter, and then the propeller would not have absorbed all the available power. The low pitch was obtained by rotating the blades through 13°. The rate of revolution was 2,400 r.p.m. (with high pitch) for the first half and 2,300 r.p.m. for the last half of the race, the power developed by the engine being 210-215 and 205 horsepower, respectively.

In the static test the propeller turned at 2,300 r.p.m., the blades set at low pitch, whereas it could not exceed 1,600 r.p.m. with the high pitch setting. The gap of 700 r.p.m. allowed by the pitch-changing mechanism is considerable.

During the analysis of the preliminary design the Levasseur design branch included an air-flow component parallel to the longitudinal axis of the blade, the idea being that, after all, even when running at static thrust, the air does not merely flow in the direction of the tangential speed V_t (fig. 41), but along the resultant of V_t and a certain radial component in the velocity V_r varying with the distance of the particular section from the hub (centrifugal effect). So the successive profiles designed by Levasseur correspond to oblique sections such as XX. The chord-thickness ratio is low, particularly toward the tips, where it drops to 4 percent, or, for a chord of some 5 cm (1.97 in.) to a thickness of 2 mm (0.08 in.) (fig. 41), which is comparable to the blade of a knife. The pressure faces are flat surfaces, the "maximum section" or, to be precise, the culminating point of the suction face is at almost 43 percent in contrast to the conventional 33 percent aft of the leading edge of the blade. The rounding of the leading edge disregarded, the section would tend to the plano-convex form. The geometrical torsion is only that resulting from the 2.75 m (9 ft.) constant pitch.

The forward tilt of the blades (figs. 39 and 41) was

calculated in such a way that the blades straighten out in flight. Each section in a propeller (see figs. 41 and 42) is subjected to the centrifugal force C and to the thrust P, which its profile produces. The bending which results from P is important when rotating on a fixed point, especially for a propeller with two pitch settings, producing a high thrust. In flight, where the revolution speed may attain all its value and the P decrease, the centrifugal force suffices to straighten out the blades.

These facts, which are well known, lead the propeller designers to compensate the blades by giving them an initial tilt; usually, however, one hesitates to bend the neutral fiber (axis) as much as the design calls for.

In the Levasseur propeller, on the other hand, the law of compensation was more strictly adhered to than customary, whence the noticeable forward tilt of the blades. It may be pointed out that the compliance with this law of compensation makes it possible to design a thinner propeller; the thickness ratio at the blade tips is 4 percent as against 5-6 percent for the Ratier type.

The torsion of the blade about its own axis due to the centrifugal force, was likewise allowed for, but its calculation is confusing, particularly in the determination of the pitch of the threads of the screwed fittings anchoring the blades in the hub.

A more simple propeller than the Levasseur is difficult to conceive. The blades are simply screwed into the two hub fittings. The power for raising the pitch is that supplied by centrifugal force.

The auxiliary devices include a mechanism for returning the blades to low-pitch setting, an interblade connection to assure uniformity and synchronization of the pitch changes, and a locking and driving mechanism.

Before giving a description of these auxiliaries, it is attempted to outline the guiding principles of the design branch. The method of anchoring the blades on a thread is now standard and we recall the mechanism of its operation in dealing with the Ratier propeller. Here, for a given blade, is a revolution speed at which the centrifugal force exceeds the torque of the blade and this speed is dependent upon the pitch of the thread.

(Centrifugal force and torque due to centrifugal force are both proportional to the square of the rate of revolution; the pitch of the anchoring thread, for which the forces cancel, is therefore very exactly defined and independent of the rate of revolution.

But here the friction in the threads (friction coefficient 0.14) and the elastic returning moment add to the torque complex functions - some of subordinate significance - not only of the r.p.m., but also of other variables. On the other hand, as soon as the blade begins to turn, its torsion moment, which depends on the mass distribution about the reference axes, varies.

It is thus clear that for a given thread pitch, the unscrewing motion, which indicates a preponderance of centrifugal force, is bound to occur sometime and will always occur at the same revolution speed. Conversely, in order to obtain the unscrewing motion at a predetermined r.p.m., the pitch of the thread must be taken into account. It may be added that the engine vibrations favor the start of the pitch change.

The pitch of the threads, however, is not designed to produce the unscrewing motion but rather to effect the return to low-pitch setting, under the action of two rubber cords at the time the r.p.m. becomes lower.

Looking at the question schematically, one may say that in the Ratier propeller the centrifugal force and the centrifugal torsion moment balance for a certain thread pitch, regardless of the revolution speed, while in the Levasseur propeller, no equilibrium exists except at a predetermined r.p.m.)

The problem of helicoidal fixation, seemingly simple, requires nevertheless careful procedure and, if balls are eliminated, so that sliding instead of rolling friction has to be considered, surprises have to be reckoned with.

The choice of lubricant was difficult. It meant finding a commercial product not liable to gum and at the same time with a viscosity (or rather the capacity of a lubricant, to seal the surfaces under pressure) which does not vary excessively with temperature.

The Levasseur company experimented with a score of substances: engine oils, grease, and even paraffin wax.

The best results were obtained with a graphite grease. It is quite possible to run the propeller without a lubricant; indeed, the greatest flexibility in rotation is obtained with direct contact of steel on duralumin, but the question of wear is problematical.

The helical threads, five in number, assure ample security of mounting; the load on the threaded parts does not exceed 150 kg/cm² (2,133.5 lb./sq.in.). The thread sections through the planes passing through the axis of the blade root, are right-angle triangles with a horizontal base of about 5 mm (0.197 in.) length; their pitch appears to be 35 mm (1.38 in.) for an outside diameter of the generating circle of 50 mm (1.97 in.) (on the hub arm).

Mention should also be made of the difficulties encountered in cutting the threads, due to the fact that the cutter moves laterally at a high speed on account of the high pitch. The five threads of one arm of the hub, for example, required 2,500 cutting strokes, and for the whole propeller, 10,000 cuts; the faces are ground by hand. This work is more delicate for the female threads of the duralumin blade root than for the male threads on the steel hub arm.

The blades are returned to low pitch by two rubber shock-absorber cords. The liaison between blades seems to present no special difficulties so long as all play is eliminated.

As concerns the locking device on the actuating gear which will be developed to meet the needs arising in each case, the Levasseur firm is an outspoken opponent of ball bearings and automatic control in variable pitch propellers, and therefore considers such devices as absolutely indispensable.

Description

Figure 44 shows the blade mounting of the Levasseur propeller with starting handle mounted at the end of the hub. Each blade P of duralumin screws into an arm B of the hub. A pin A integral with P extends into the openings O and O' of B and limits the angular rotation of the blade.

Two shock-absorber cords, such as S, fastened at the periphery of the blade root by means of a ball fitting R,

are stretched when the blades are unscrewed. When the rate of revolution - and with it the centrifugal force - is reduced, the cords tend to screw P onto B.

A sleeve M, rotatable about the hub, carries two lugs which engage the ends of pins A, by means of two swivel joints r and r'. When P unscrews, M rotates (for example, in the same direction as the hub), about the hub, and at a higher speed than the hub; M rotates in the opposite direction when the blades are tightened again, under the action of the shock-absorber cords.

Sleeve M has two openings O and O', in which the studs e and e' of the hub can engage (these studs turn with the propeller). M is kept constantly pressed against e and e' by the spring rods d-d' located in the pins A, but may be withdrawn by a lever F with forked end carrying a roller.

At starting or at rest (minimum pitch) the rubber cords S hold each blade in the position shown in figure 44; the system is locked when e and e' are engaged in O and O'.

To raise the pitch after reaching the desired r.p.m., the pilot simply pushes sleeve M back by means of levers F (figs. 43 and 44). The system being thus released, the blades unscrew to an amount permitted by the clearance of the pins A in the openings O and O'. The swivel joints r and r' allow the upward shifting of A following the unscrewing motion.

To return to the initial position, the pilot releases his hold on M by means of F, then he reduces the revolution speed; the tension of the shock-absorber cords is sufficient to ensure the tightening of the blades. Simultaneously, the spring rods d and d' return M and e-o, and e'-o' re-effect the locking.

The Levasseur propeller on the C.366 (fig. 42) weighs 22.75 kg (50.2 lb.), control included, for a diameter of 1.95 m (6.4 ft.).

A similar propeller designed for a 300 horsepower engine has turned for five hours on the torque stand when fitted to a 550 horsepower engine, where it operated under five times more strenuous conditions than its normal intended use. The propeller for the C.366 had a factor of safety of 7.

The Levasseur company intends to develop this type of propeller for general purposes. Parallel with this development, it studies the mounting of blades on superposed rubber disks. In the latter system the pitch changes are allowed by the successive distortions of the disks as the faces slide, one over the other, in relative angular motion.

Translation by J. Vanier,
National Advisory Committee
for Aeronautics.

LEGENDS

FIGURE 1.-Tuning up the Caudron C.460 at Etampes for a practice flight, May 5, 1934.

FIGURE 2.-The Comper "Streak" in flight.

FIGURE 3.-Caudron C.366, with Régnier 210 hp. engine (Massotte), showing: (left) wheel controlling wing flaps and stabilizer setting with indicator; (right) the sliding top.

FIGURE 4.-Stability curves of the C.360. The stability of the C.450 and the C.460 has been increased (area of stabilizer increased 2 percent).

FIGURE 5.-Polars and fineness ratio of C.460, with landing gear and cooling allowed for five split-flap settings from $\beta = 0^{\circ}$ to $\beta = 45^{\circ}$. The fineness ratio, which is 16 for flaps closed, drops to 7 for flaps set to maximum, while C_z shifts from 98 to 133.

FIGURE 6.-Top: point F of the chord is farther from the wing tip than point F_1 of the thickness; the relative heights decrease faster than the chords. In XX the grooves for inserting the plywood. Bottom: fuselage; 1 and 5, fittings for fuselage cover.

FIGURE 7.-(Left): landing gear and split flaps of Delmotte's C.460. (Right): Monville in C.460.

FIGURE 8.-Caudron 460. Characteristics of C.450 and C.460: span, 6.75 m (22.14 ft.); length, 7.125 m (23.38 ft.); height, 1.80 m (5.91 ft.); wing area, 6.90 m² (74.27 sq.ft.); weight empty, 520 kg (1,146.4 lb.); gross weight, 875 kg (1,929 lb.).

FIGURE 9.-Structural sketch of Caudron 460.
Top: method of mounting wing to fuselage (reversed).
Center: wheel well and wing cut-out.
Bottom: fuselage cut-out.

FIGURE 10.-Split-flap control in C.450 and C.460. M, actuating control box B; m, regulating sleeve for connecting fin; V, square-threaded screw; b and b', actuating rods.

FIGURE 11.-Comper "Streak" characteristics:

span,	7.16 m	(23.49 ft.)
length,	5.49 "	(18.01 ")
height,	1.75 "	(5.74 ")
wing area,	7.43 m^2	(79.98 sq.ft.)
weight empty,	400 kg	(881.80 lb.)
gross weight,	680 "	(1499.10 ")
wing loading,	91.5 kg/m^2	(18.74 lb./sq.ft.)
power loading	4.70 kg/hp	(10.22 lb./hp.)

FIGURE 12.- Potez 532, photographed on leaving Meaulte for Villacoublay.

FIGURE 13.-Windshield designs for the Potez 532.

FIGURE 14.-Left: development of profile along the span in the Potez 532. Right: Corresponding polars.

FIGURE 15.-Trailing-edge flap control in Potez 532 and 533. Shaft M with bevel pinions in box C engages helical wheels such as H. The loosening or tightening of the threaded A effects the flap setting.

FIGURE 16.-Stability curves of the Potez 533. (Centering refers to chord of center of surface.)

FIGURES 17-18.-Left: drag versus L/D for different combinations of fuselage cowlings. Right: experimental cowls and fuselages.

FIGURE 19.- Model for Potez for testing ring cowls in the wind tunnel. The different models were designed at 1/4 scale with respect to the dimensions given in the report, while faithfully preserving the smallest details of the full-scale model.

FIGURE 20.-Aerodynamic reaction on a ring cowling.

FIGURE 21.-Design of Potez 533 fuselage.

FIGURE 22.-Fairings and fillets on the fuselage of Potez 533.

FIGURE 23.-Flight-control assembly of Potez 533.

FIGURE 24.-Comparative assemblies of Potez 532 (fine lines) and Potez 533 (heavy lines):

	Potez 532	Potez 533
span	7.20 m (23.62 ft.)	7.10 m (23.29 ft.)
length	5.90 m (19.35 ft.)	5.72 m (18.77 ft.)
height	2.50 m (8.20 ft.)	2.50 m (8.20 ft.)
wing area	8.00 m^2 (86.11 sq.ft.	7.60 m^2 (81.81 sq.ft.)
weight empty	550.00 kg (1212.54 lb.)	550.00 kg (1212.54 lb.)
gross weight	890.00 kg (1962.11 lb.)	925.00 kg (2039.27 lb.)
(of which was for fuel and 75 kg (165.3 lb.) for pilot)	265.00 kg (584.2 lb.)	300.00 kg (661.4 lb.)
wing loading (with full load)	119.00 kg/m^2 (24.37 lb./sq.ft.)	124.0 kg/m^2 (25.4 lb./sq.ft.)
(without fuel)	82.0 kg/m^2 (16.8 lb./sq.ft.)	85.0 kg/m^2 (17.4 lb./sq.ft.)
power loading	3.1 kg/hp (6.74 lb./hp.)	2.7 kg/hp (5.87 lb./hp.)

FIGURE 25.-Wing fillets on the Potez 532.
Top: projection of longitudinal sections on plane of symmetry; transverse sections 1 to 23; and corresponding plan view.
Center: half view toward rear.
Bottom: half view toward front, with sections XX, YY, ZZ, and TT. The fillet is encircled by a heavy line, interrupted in the hidden parts.

FIGURE 26.-Wing fillets on the Potez 533. (Same as fig. 25, except showing transverse sections 1 to 17.)

FIGURE 27.-Structural sketch of Potez 533, showing:
Top: engine mount and oil cooler, with details of part of ring and attachment to fuselage.
Bottom: instrument panel and detachable windshield assembly.

FIGURE 28.-Retractable or detachable parts on the Potez 533.
Top: front view of landing gear assembly; (left) attachment of V truss to oleo leg.
Bottom: method of wing attachment.

FIGURE 29.-Static test of Potez 533 wing; breaking factor 7.

FIGURE 30.-Charlestop oleo-pneumatic retraction system.

FIGURE 31.-Details of lifting jacks and locking mechanism.

FIGURE 32.-Charlestop scheme of signals indicating position of landing gear.

FIGURE 33.-Equilibrium of forces in the helicoidal attachment of the blade root.

FIGURE 34.-Thrust of Ratier automatic propeller (diameter 1.80 m (5.9 ft.)) mounted on Caudron 450 and 460, Renault 310 hp. engine. The dotted curve is for the low pitch 26γ at 0.60 m (1.97 ft.) from thrust line. Static thrust: 318 kg (701 lb.) at 2620 r.p.m. Maximum thrust: 380 kg (837.8 lb.) at 2720 r.p.m. and 75 km/h (46.6 mi./hr.). At take-off, toward 120 km/h (74.6 mi./hr.), the thrust is still around 350 kg (771.6 lb.). The full curve is for high pitch (36γ) at static thrust.

FIGURE 35.-The Ratier automatic propeller.

FIGURE 36.-Parts of Ratier pitch changing mechanism.

FIGURE 37.-Ratier propeller for engine developing 240 hp. at 2500 r.p.m.; diameter 1.90 m (6.23 ft.); weight 21.500 kg (47.400 lb.).

FIGURE 38.-Levasseur controllable propeller fitted to C.366, Régnier 217 hp. engine.

FIGURE 39.-Nose of Caudron 366-"Atalante", Régnier 217 hp. engine fitted with a Levasseur manually operated propeller. (Note forward tilt of blades.)

FIGURE 40.-τ, χ, and η curves of model tests for the Levasseur propeller obtained in big tunnel at Issy-les-Moulineaux at 1700 r.p.m.; diameter of propeller, 1.50 m (4.92 ft.).

FIGURE 41.-Sketch of aerodynamic study of Levasseur propeller; (left) centrifugal effect, due to radial component V_r in the speed of air flow with respect to the blade; (center) sketch of blade tip. The relative heights are assumed to be in millimeters and the thickness scales are much higher than those of the chords. (See section XX.)

FIGURE 42.-Two views of hub of the Levasseur manually operated propeller.

FIGURE 43.-Diagram of method of operating sleeve M through fork-ended levers F, fitted with rollers.

FIGURE 44.-Diagrammatic elevation and plan views of the Levasseur manually operated propeller.

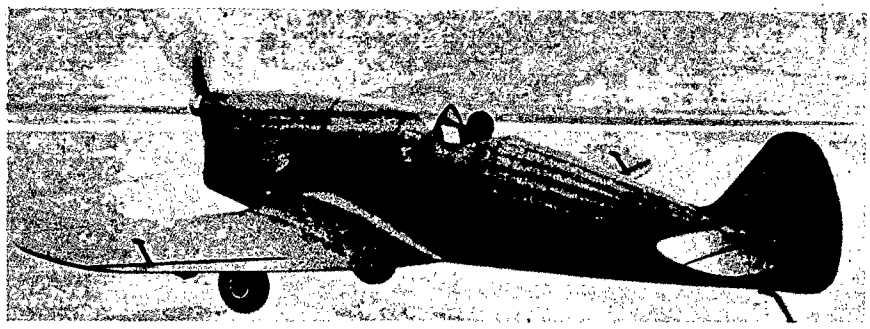

Figure 2.
The Comper "Streak" in flight

Tuning up the Caudron C.460 at Etampes for a practice flight, May 5. 1934

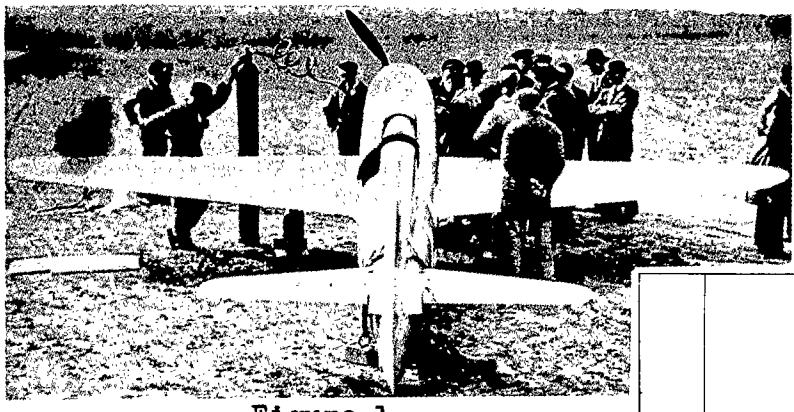

Figure 1.

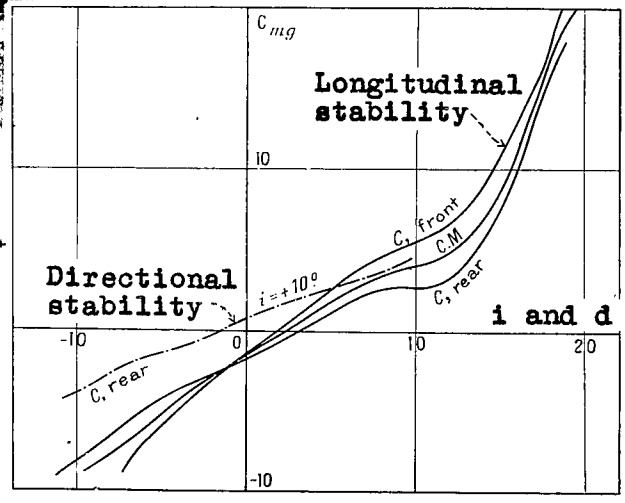

Figure 4.

Figure 4. Stability curves of the C.360. The stability of the C.450 and the C.460 has been increased (area of stabilizer increased 2%

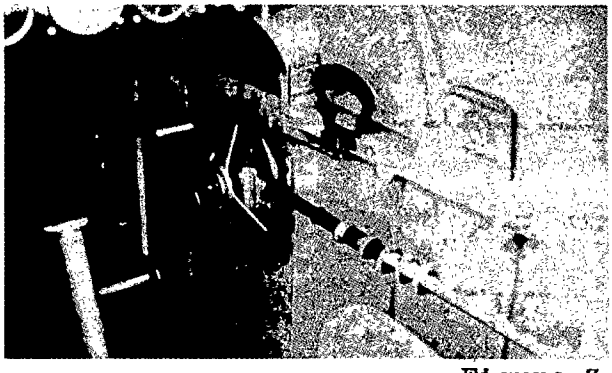

Figure 3.

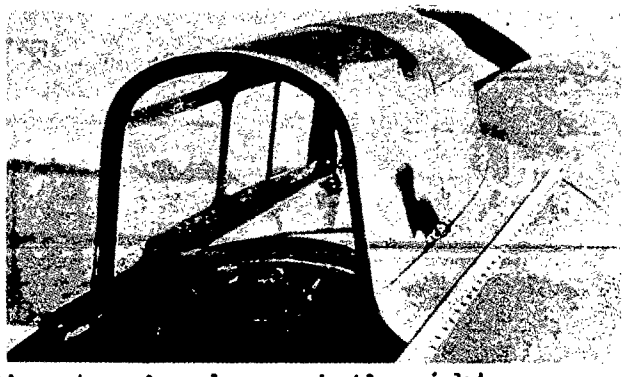

Wheel controlling wing flaps and stabilizer setting with indicator of the Caudron C.366 - Regnier 310 hp. engine (Massotte). The sliding top is shown at the right

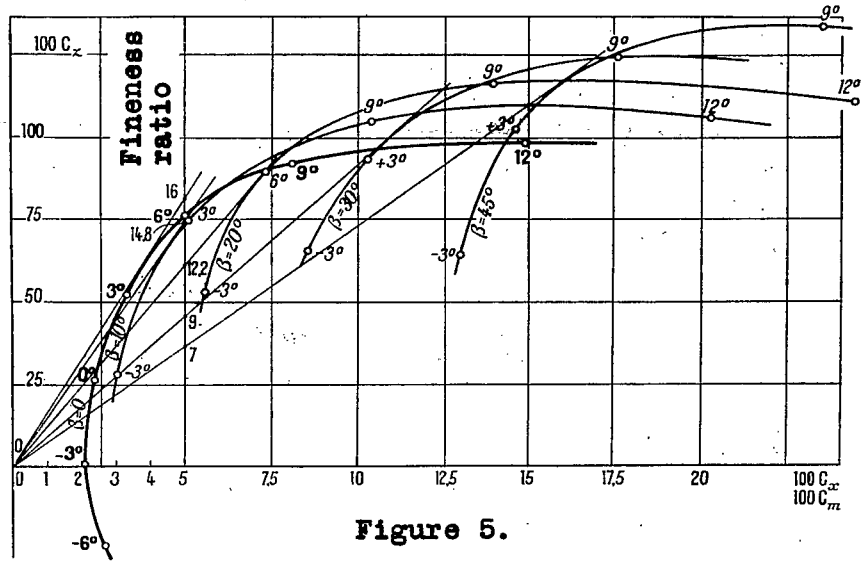

Figure 5.

Polars and fineness ratio of C.460 with landing gear and cowling and five split-flap settings

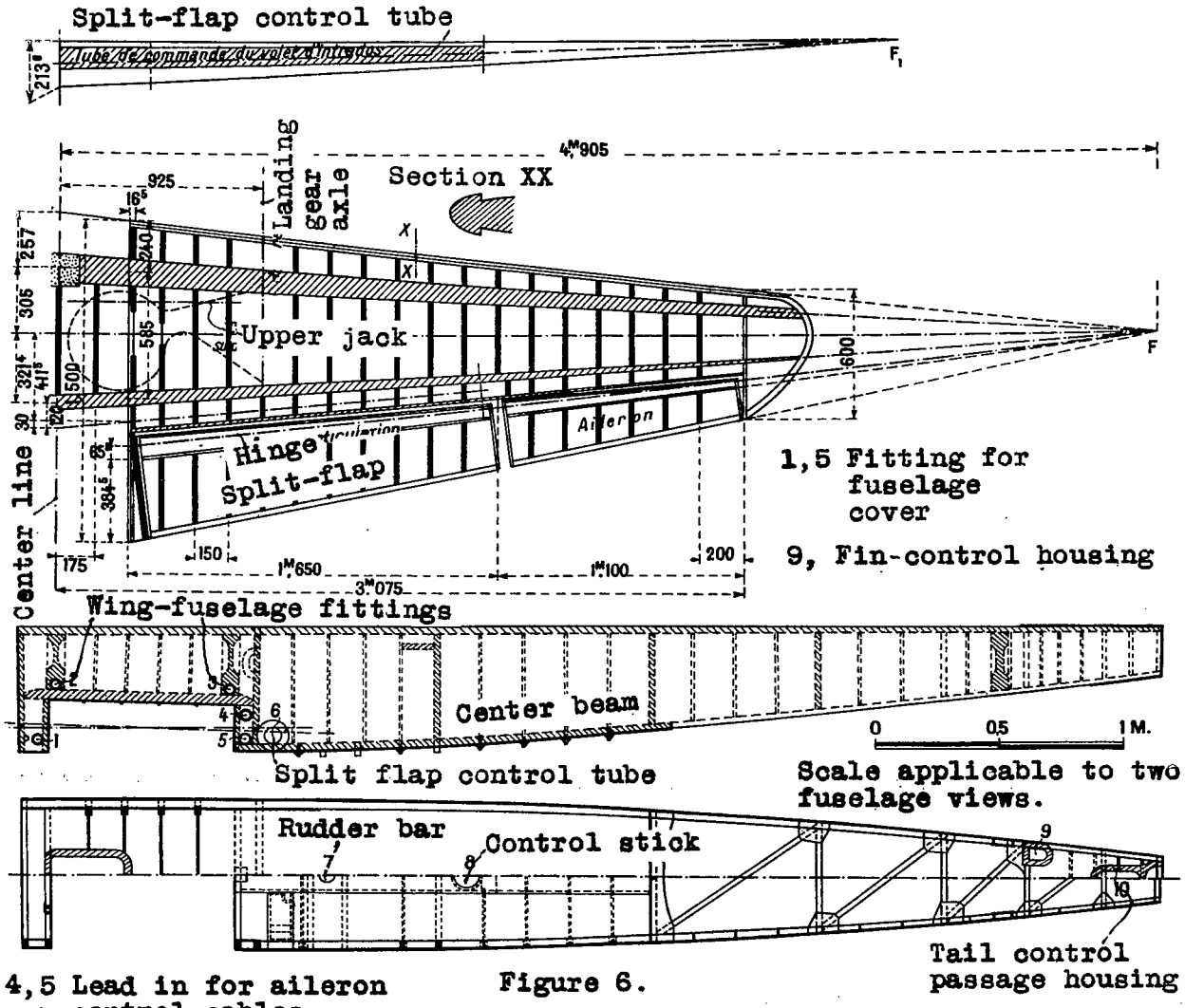

Figure 6.

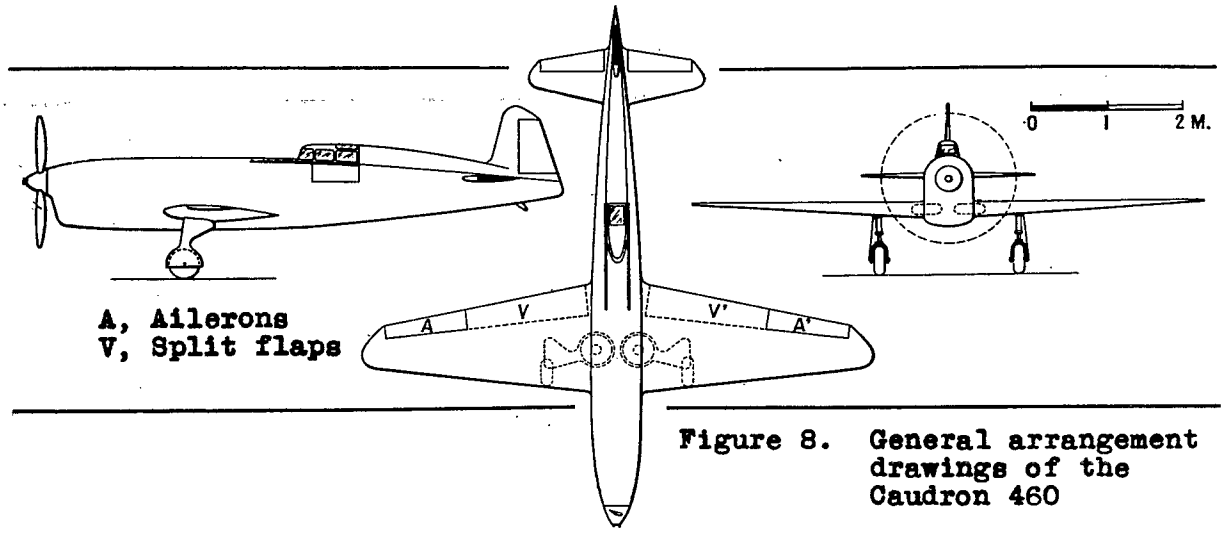

Figure 8. General arrangement drawings of the Caudron 460

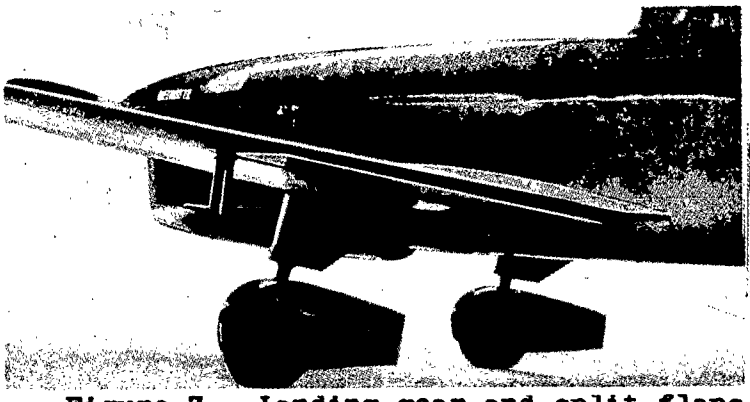

Monville in C.460

Figure 7. Landing gear and split flaps of the C.460 (Delmotte)

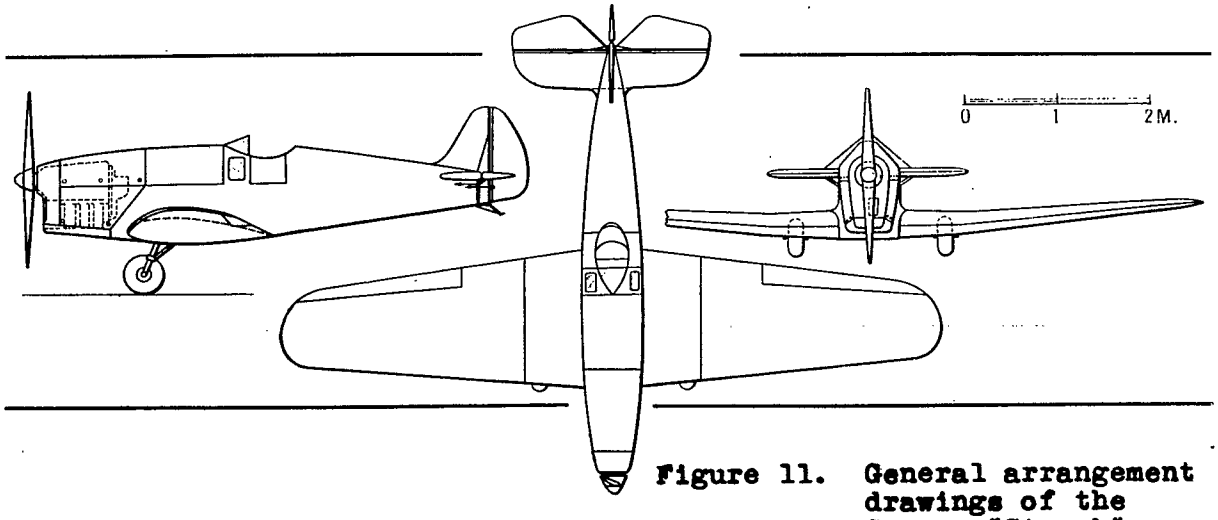

Figure 11. General arrangement drawings of the Comper "Streak"

Figure 10. Split-flap control in C.450 and C.460. M actuating control box B; m regulating sleeve for connecting fin; V square-threaded screw; b and b' actuating rods

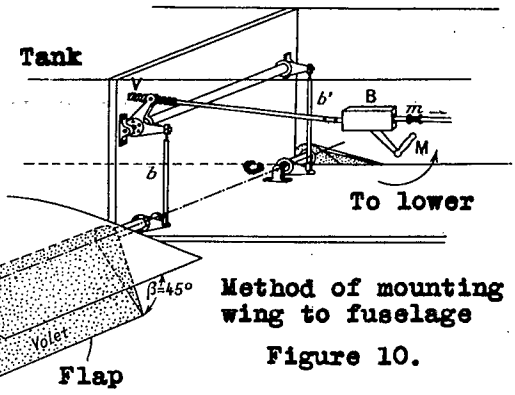

Method of mounting wing to fuselage

Figure 10.

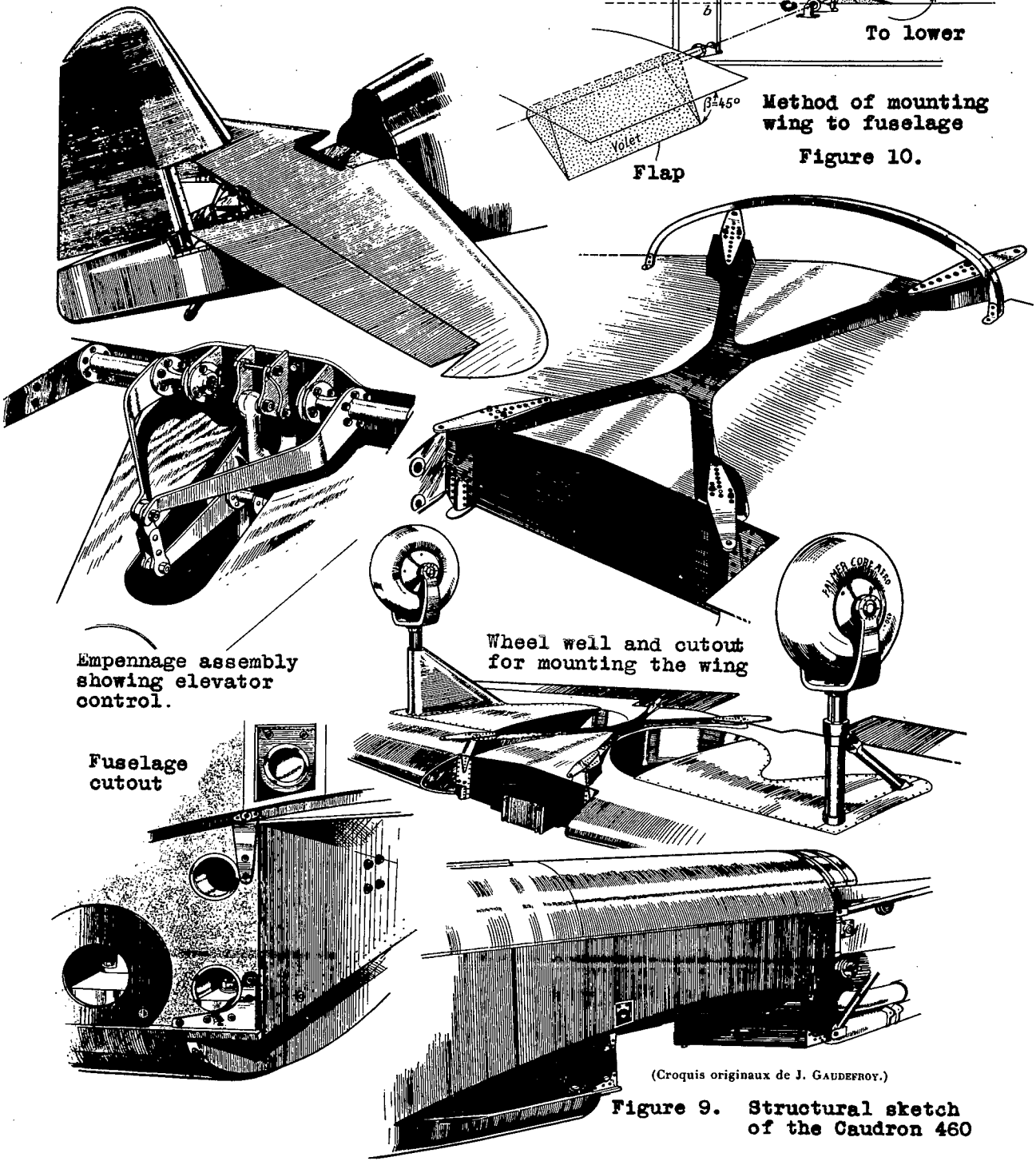

(Croquis originaux de J. GAUDEFROY.)

Figure 9. Structural sketch of the Caudron 460

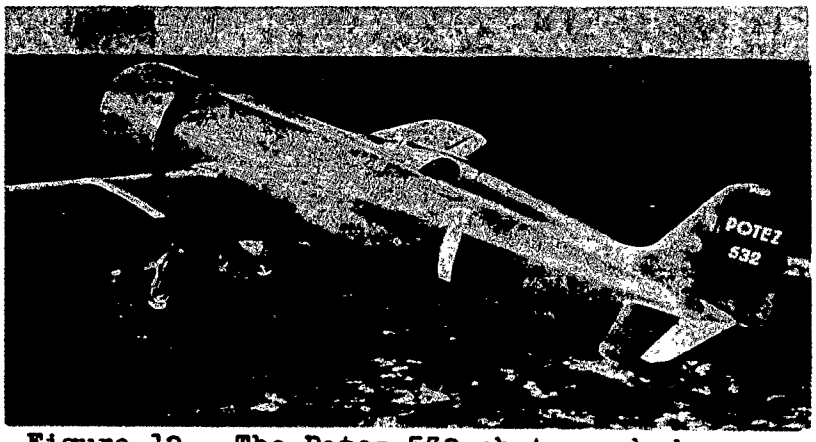

Figure 12. The Potez 532 photographed upon leaving Meaulte for Villacoublay

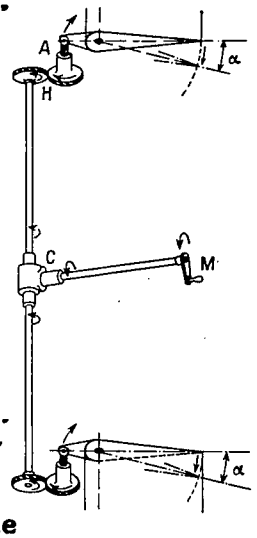

Figure 15. Trailing edge flap control in Potez 532 and 533. Shaft M with bevel pinions in box C engages helical wheels such as H. The loosening or tightening of the thread A effects the flap setting.

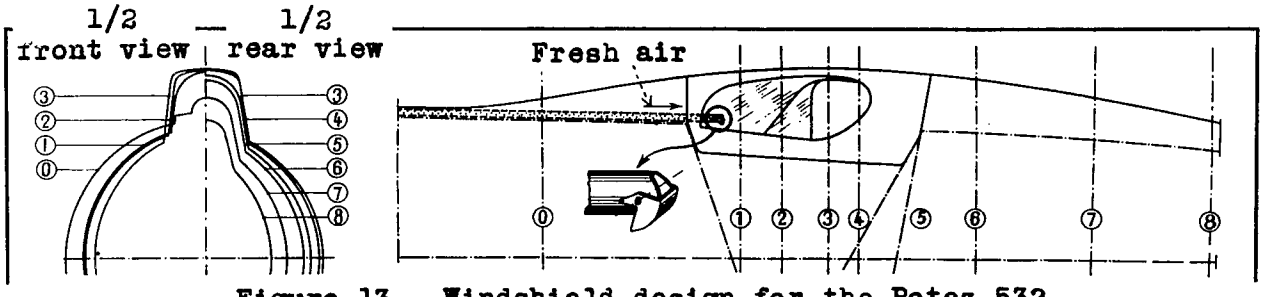

Figure 13. Windshield design for the Potez 532

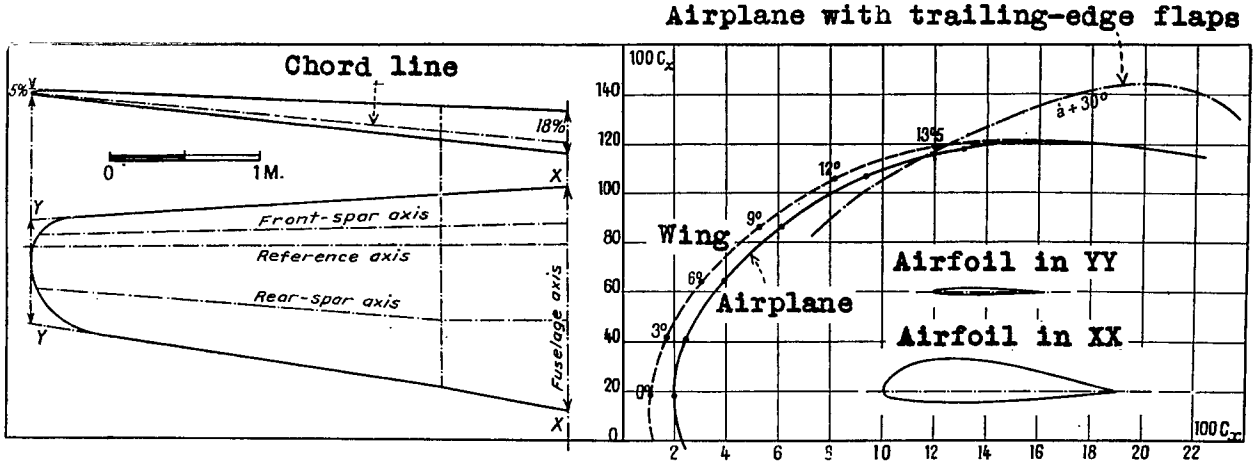

Figure 14. Development of profile along the span in the Potez 532. (right); corresponding polars.

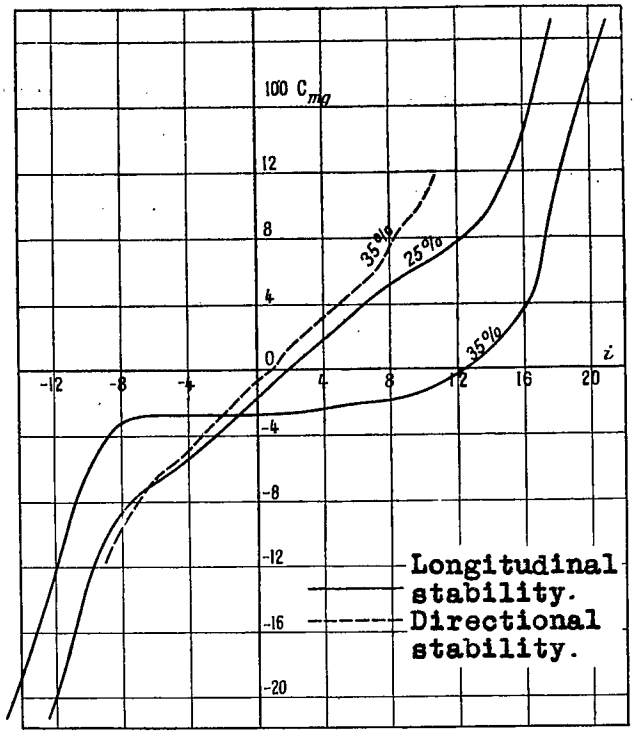

Figure 16.-Stability curves of the Potez 533 airplane.

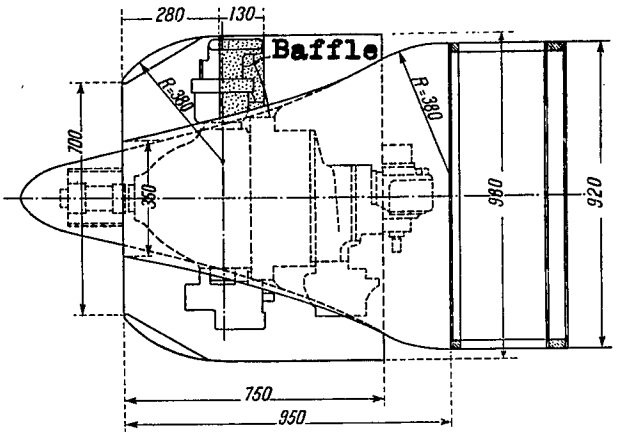

Figure 19.-Model for Potez for testing ring cowls in the wind tunnel.

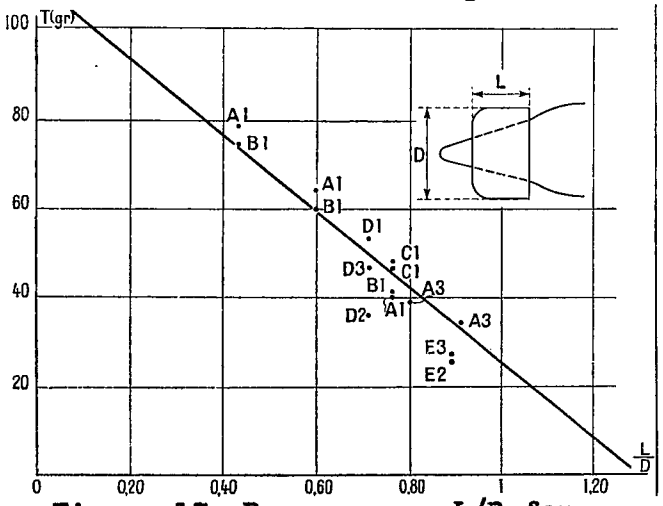

Figure 17.-Drag versus L/D for different combinations of fuselage cowlings.

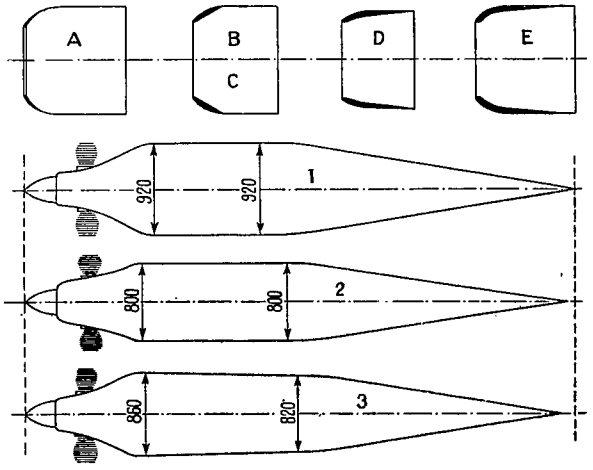

Figure 18.-Experimental cowls and fuselages.

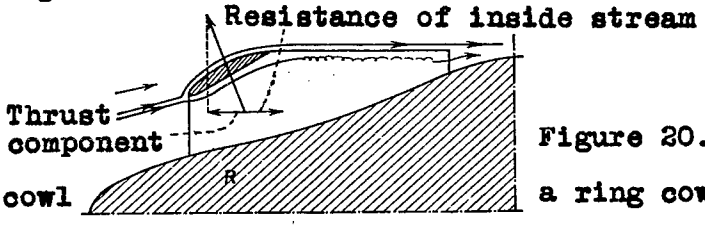

R, Reaction on cowl

Figure 20.-Aerodynamic reaction on a ring cowling.

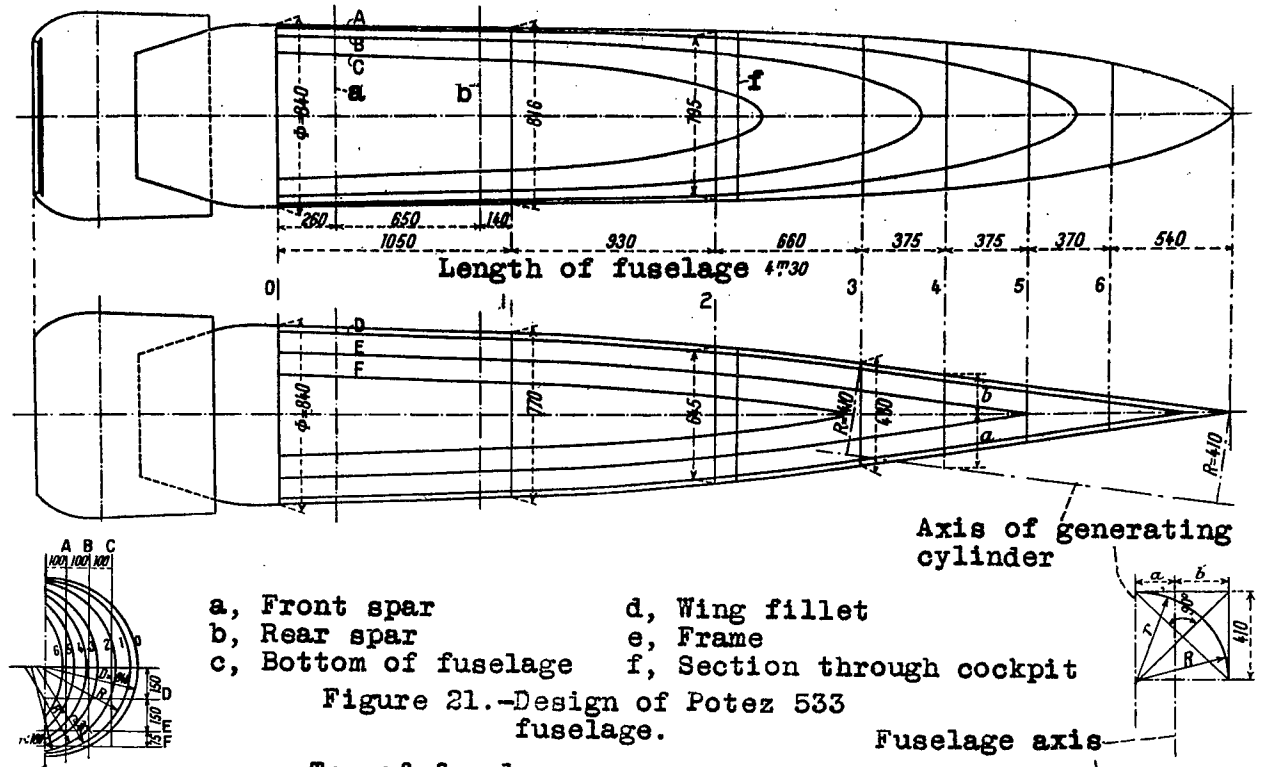

a, Front spar
b, Rear spar
c, Bottom of fuselage
d, Wing fillet
e, Frame
f, Section through cockpit

Figure 21.-Design of Potez 533 fuselage.

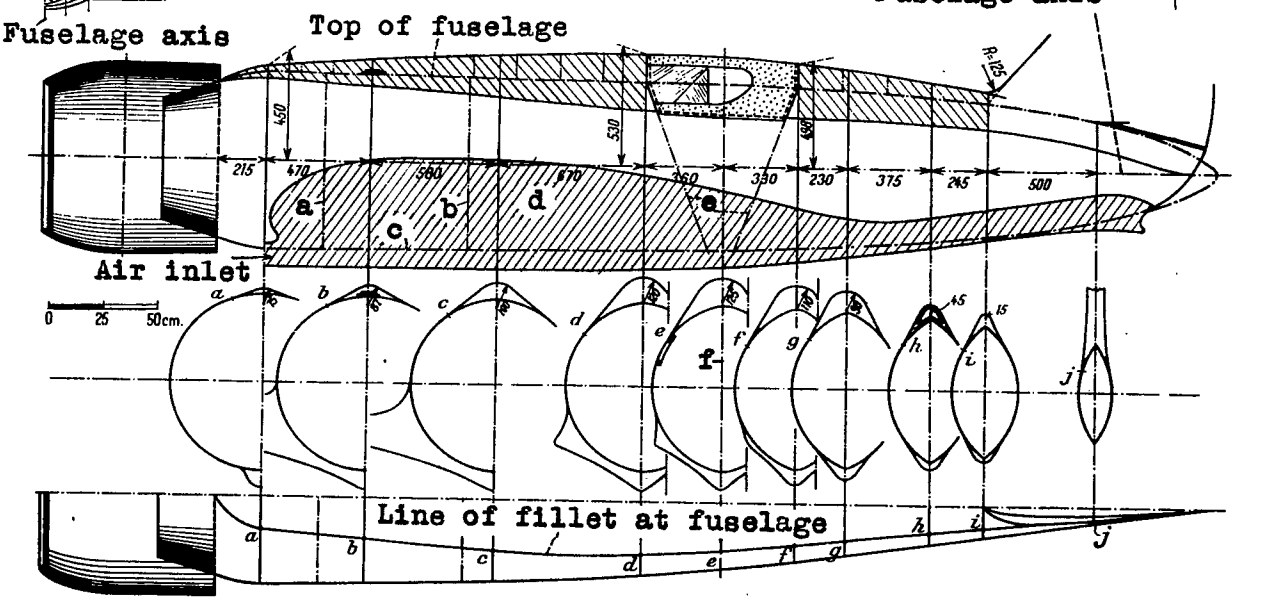

Figure 22.-Fairings and fillets on the fuselage of Potez 533 airplane.

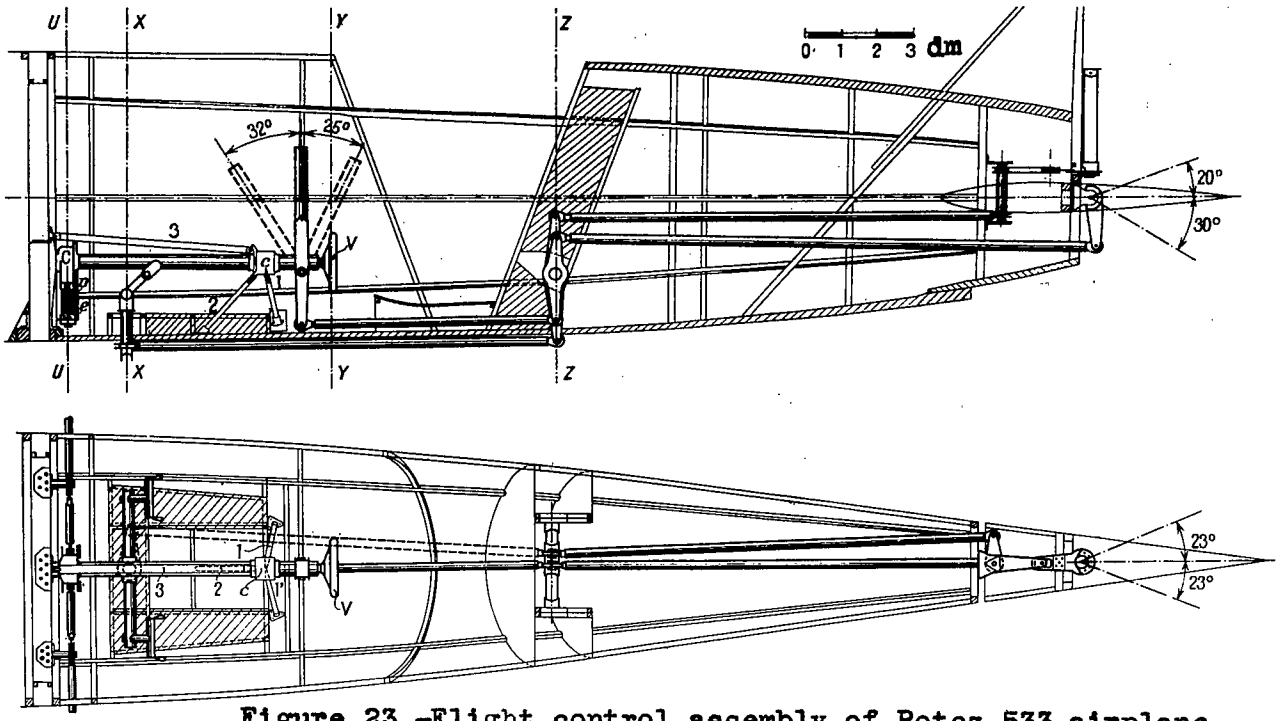

Figure 23.-Flight control assembly of Potez 533 airplane.

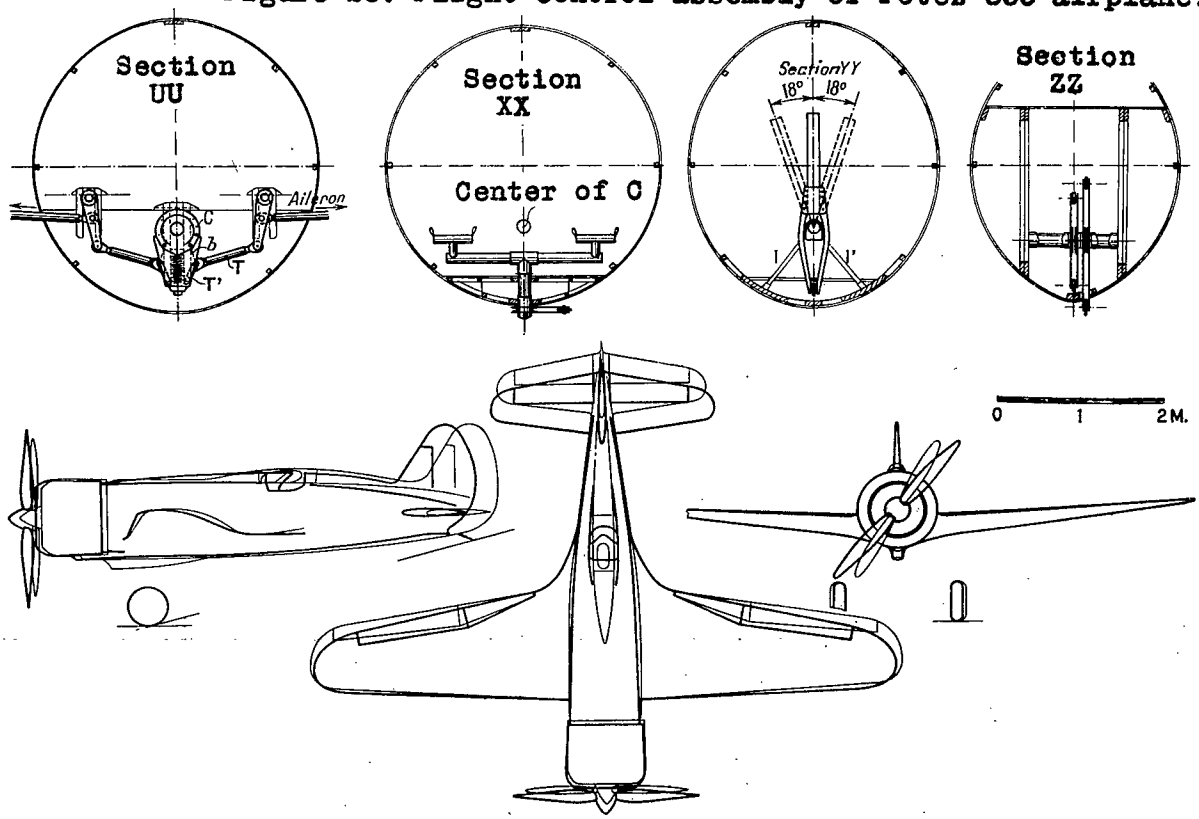

Figure 24.-Comparative assemblies of Potez 532(fine lines) and Potez 533(heavy lines).

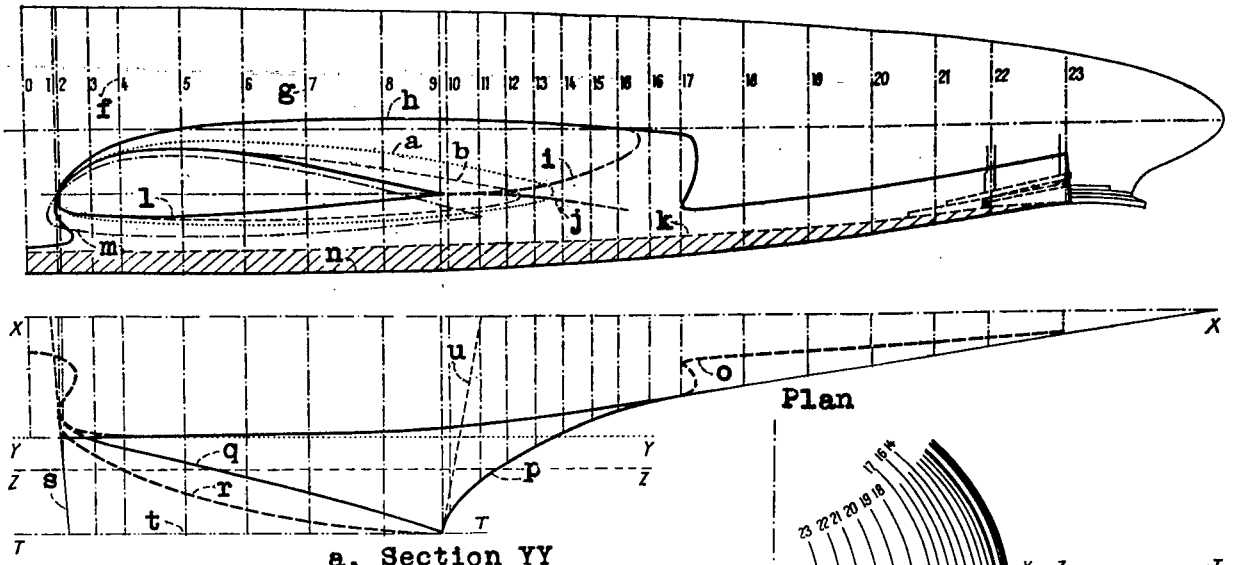

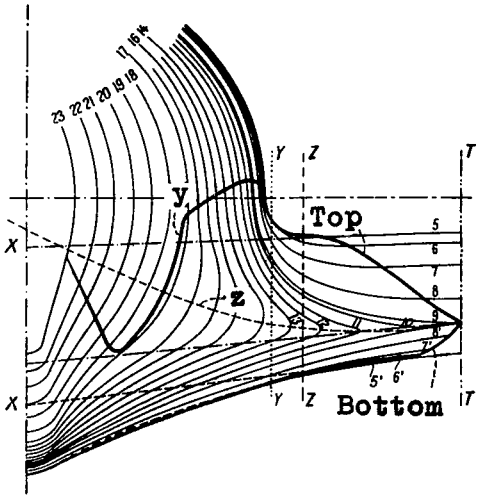

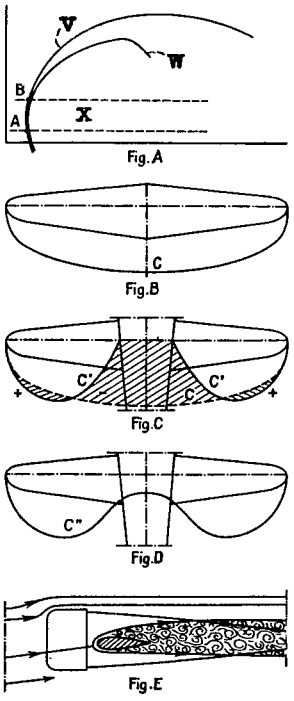

a, Section YY
b, " ZZ
f, Front spar
g, Rear spar
h, Upper edge of fillet at fuselage
i, Trailing edge(round)
j, Fillet
k, Lower fuselage edge
l, Projection of fillet contour around the airfoil
m, Fictitious profile at XX in symmetrical plane of fuselage
n, Fairing of oil cooler
o, Outer edge of fuselage
p, Trailing edge of fillet
q, Top fillet
r, Bottom fillet
s, Leading edge
t, Attachment to wing
u, Imaginary trailing edge
v, Polar with fillets
w, Without fillets
x, High speed range
y, Limit of fuselage fillet
z, Trailing edge (rounded)

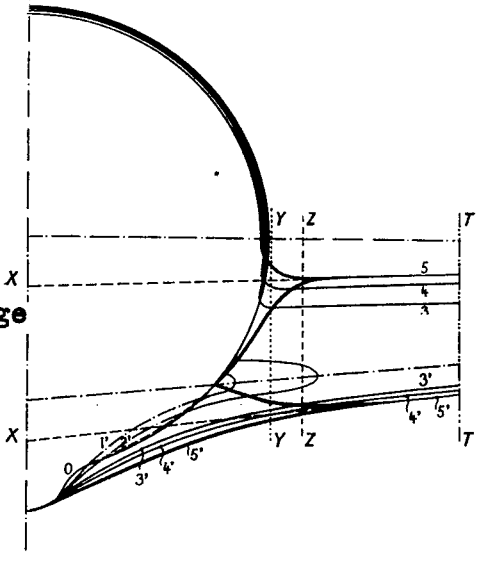

Figure 25.-Wing fillets on the Potez 532 airplane.

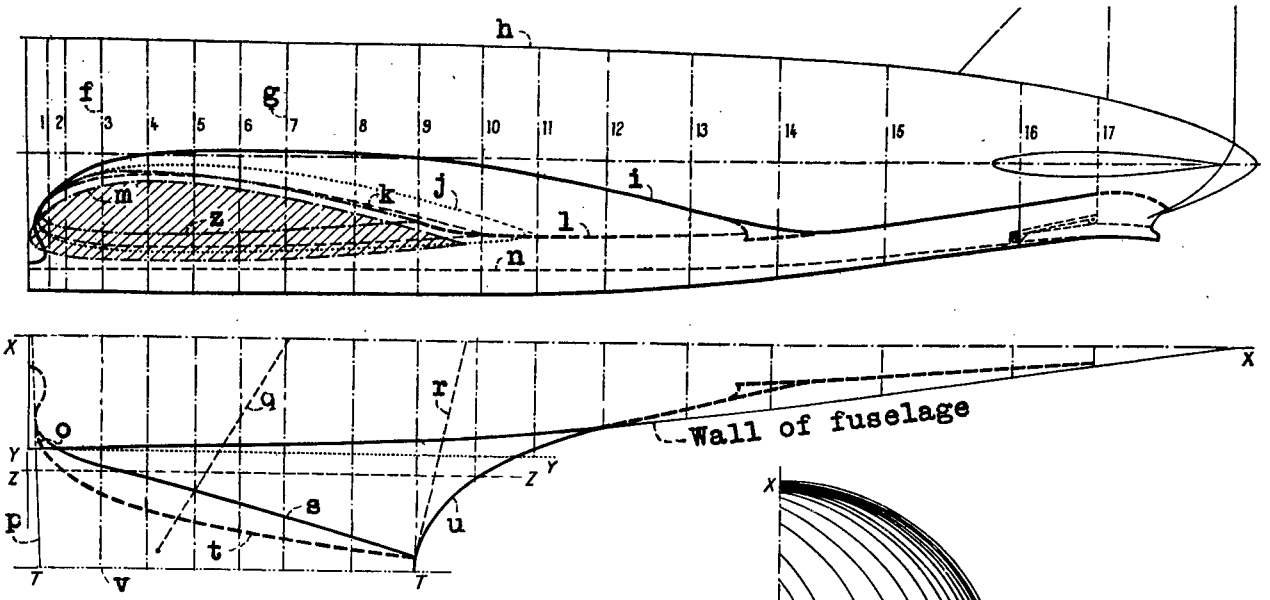

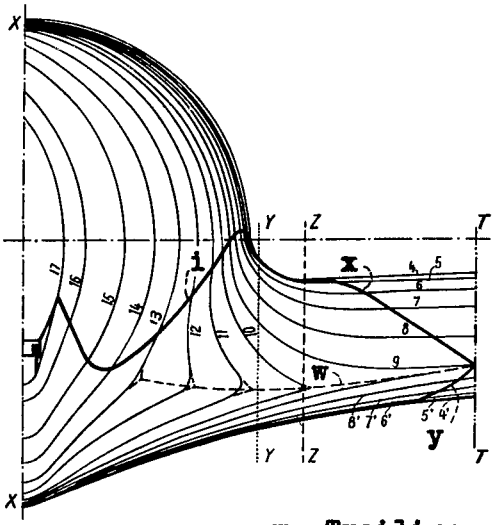

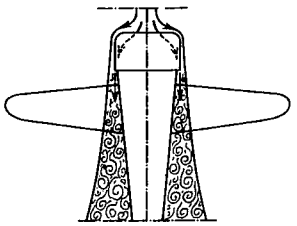
Fig.26A

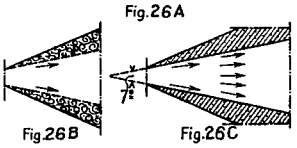
Fig.26B Fig.26C

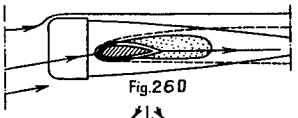
Fig.26D

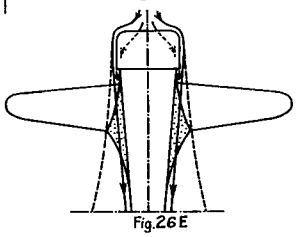
Fig.26E

f, Front spar
g, Rear spar
h, Upper edge of fuselage
i, Upper edge of fillet at fuselage
j, Section YY
k, Section ZZ
l, Round trailing edge of fillet
m, Fictitious profile at XX in symmetrical plane of fuselage
n, Lower edge of fuselage
o, Leading edge (extended)
p, Leading edge
q, Oleo leg retracted
r, Trailing edge projected
s, Fillet edge(top)
t, Fillet edge (bottom)
u, Trailing edge of fillet
v, Section attached to wing

w, Trailing edge rounded
x, Top camber
y, Bottom "
z, Section TT

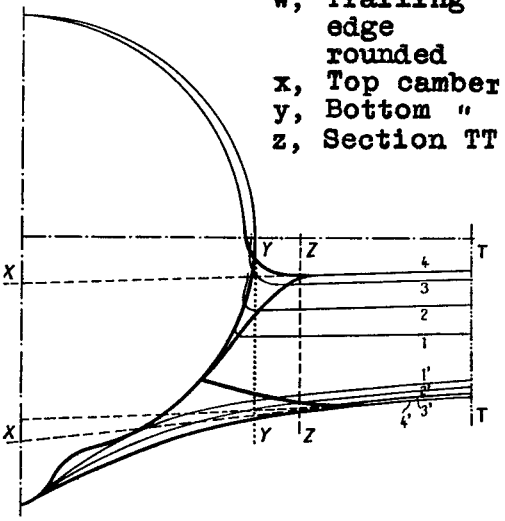

Figure 26.- Wing fillets on the Potez 533, (same as Figure 25) except showing transverse sections 1-17.

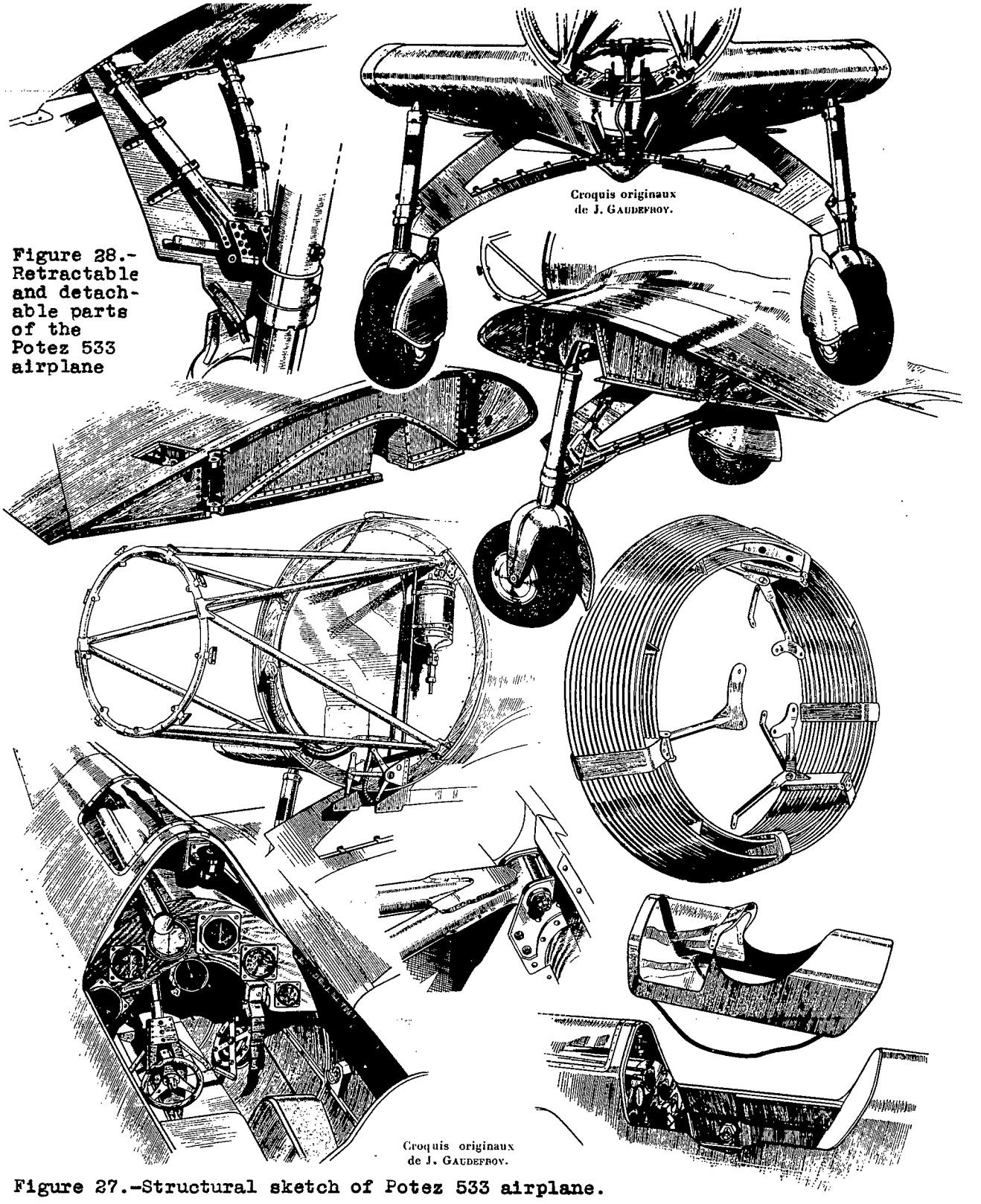

Figure 28.- Retractable and detachable parts of the Potez 533 airplane

Figure 27.-Structural sketch of Potez 533 airplane.

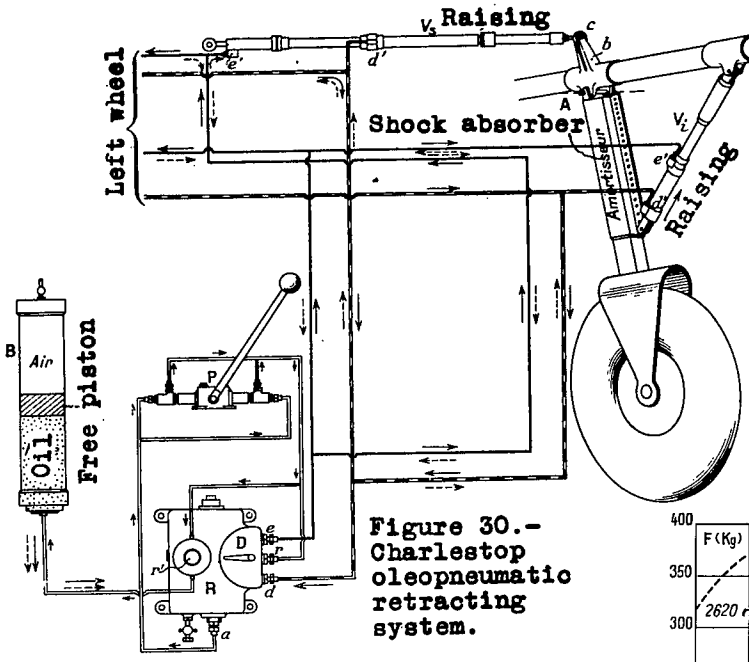

Figure 30.- Charlestop oleopneumatic retracting system.

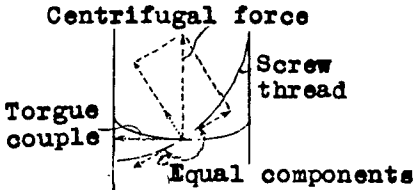

Figure 33. Equilibrium of forces in the helicoidal attachment of the blade root

Figure 34. Thrust of Ratier automatic propeller mounted on Caudron 450 and 460 with Renault 310 hp.engine. The dotted curve is for the low pitch 26γ at 0.60 m (1.97 ft.) from thrust line

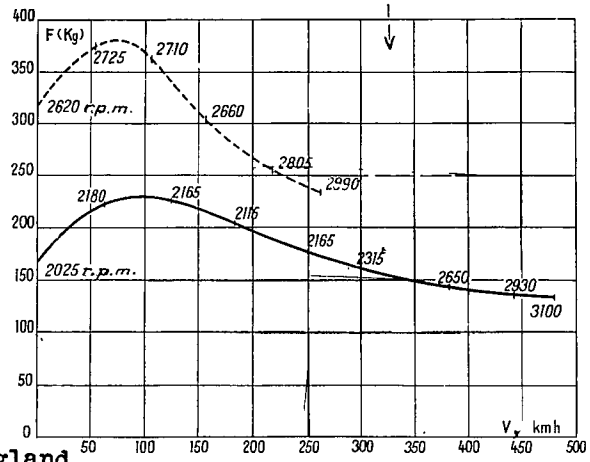

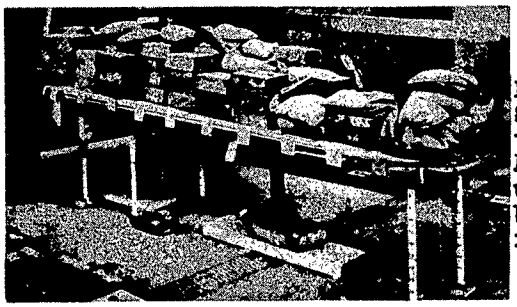

Figure 29 Static test of Potez 533 wing; breaking factor 7

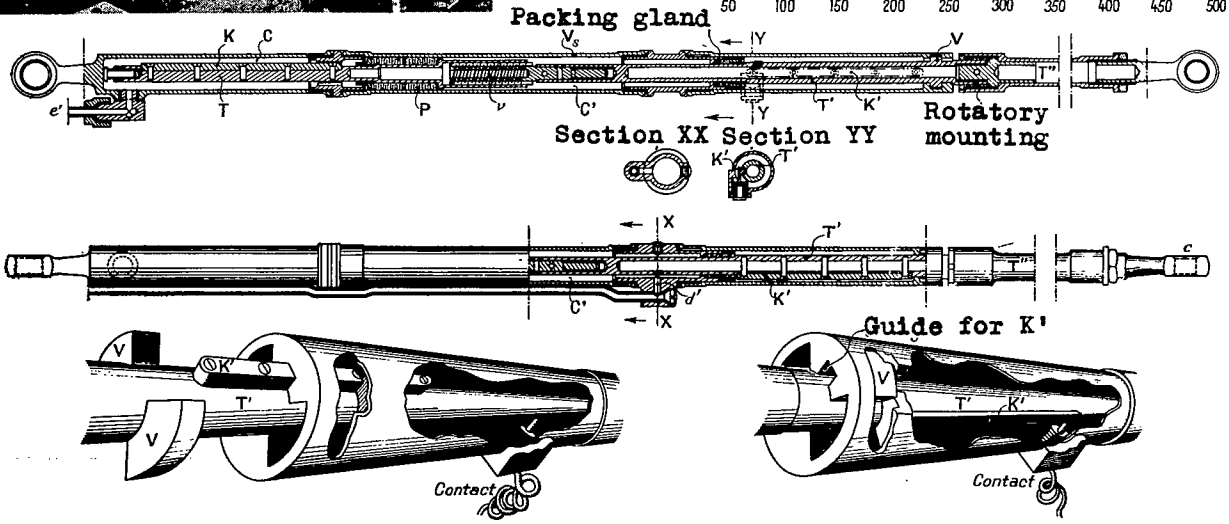

Figure 31.- Details of lifting jacks and locking mechanism

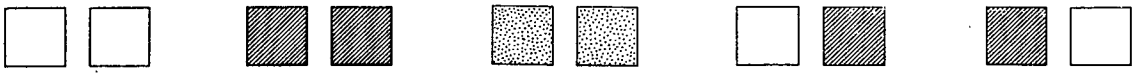

Figure 32.- Charlestop scheme of signals indicating position of landing gear

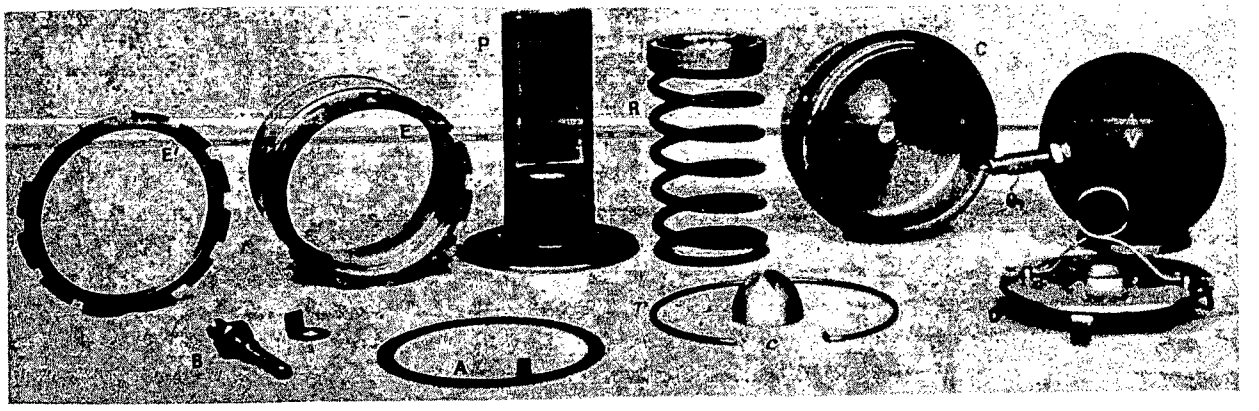

Figure 36.-Parts of Ratier pitch changing mechanism.

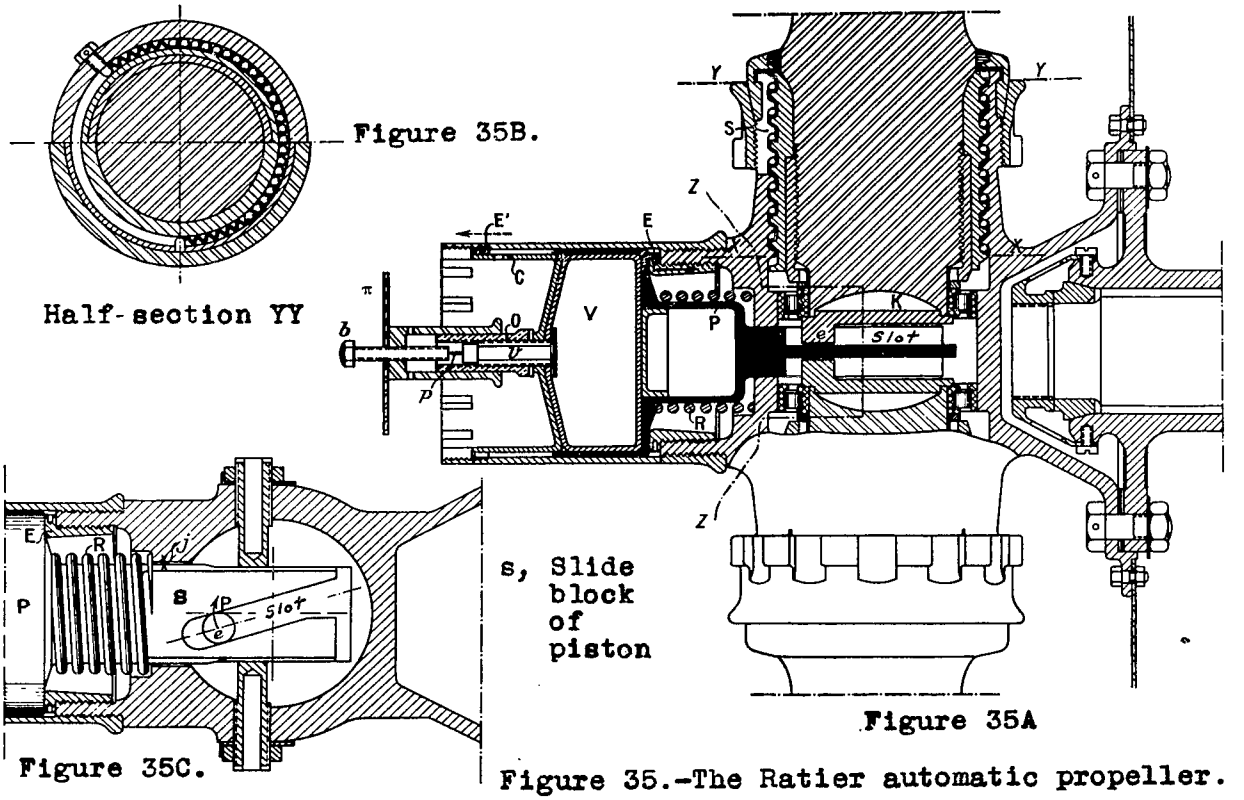

Figure 35.-The Ratier automatic propeller.

Half-section XX

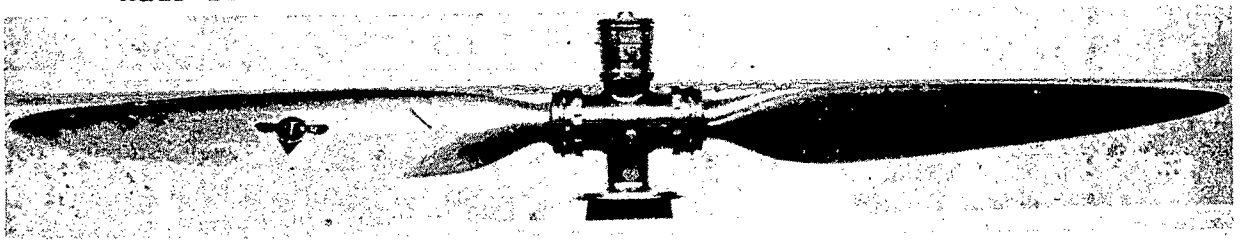

Figure 37.-Ratier propeller for engine developing 240 hp. at 2500 r.p.m. diameter: 1.90m (6.23 ft.); weight: 21.5 kg (47.4 lb.)

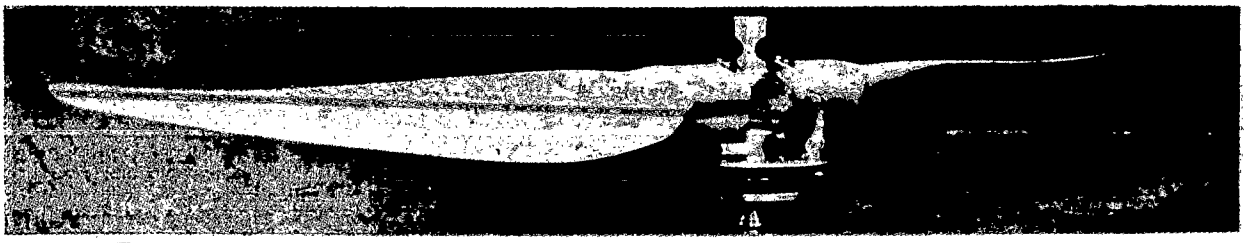

Figure 38.- Levasseur controllable propeller fitted to C.366 217 hp. Regnier engine.

Figure 39.- Nose of Caudron 366 "Atalante" 217 hp. Regnier, fitted with Levasseur manually operated propeller. (Note forward tilt of blade).

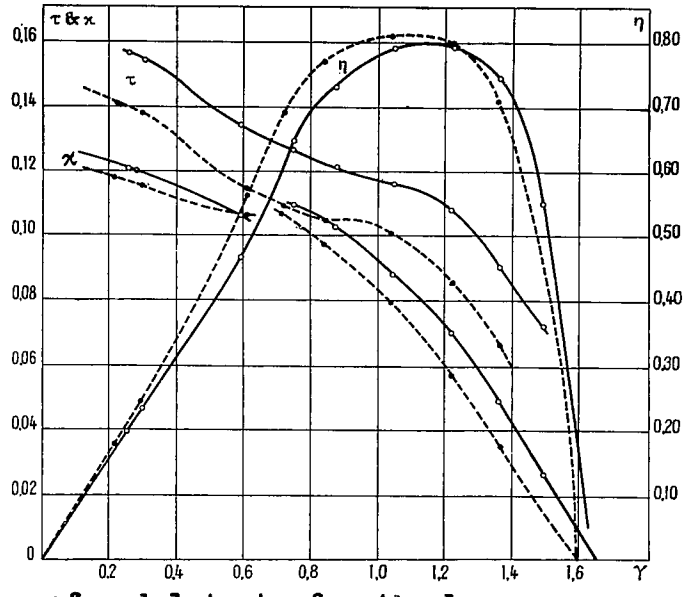

Figure 40.- τ, χ and η curves of model tests for the Levasseur propeller obtained in big tunnel at Issy-les-Moulineaux at 1700 r.p.m. Diameter of propeller: 1.50 m (4.92 ft.), pitch-diameter ratio 1.50 m, constant pitch at 2.25 m (7.38 ft.). Full lines are for 35°37' setting at 0.50 m (1.64 ft.) distance from thrust axis; dashed curves for pitch lowered 1° 37', at 0.50 m from thrust axis it becomes 34° and the pitch ratio 1.40 m (4.6 ft.). The discontinuity observed in the tests near γ = 0.6 - 0.7 has been preserved in the τ and χ curves.

Figure 41.- Sketch of aerodynamic study of Levasseur propeller. (left): centrifugal effect, due to radial component V_r in the speed of air flow with respect to the blade. (center): sketch of blade tip; the relative heights are assumed to be in mm and the thickness scales are much higher than those of the chords (see section XX).

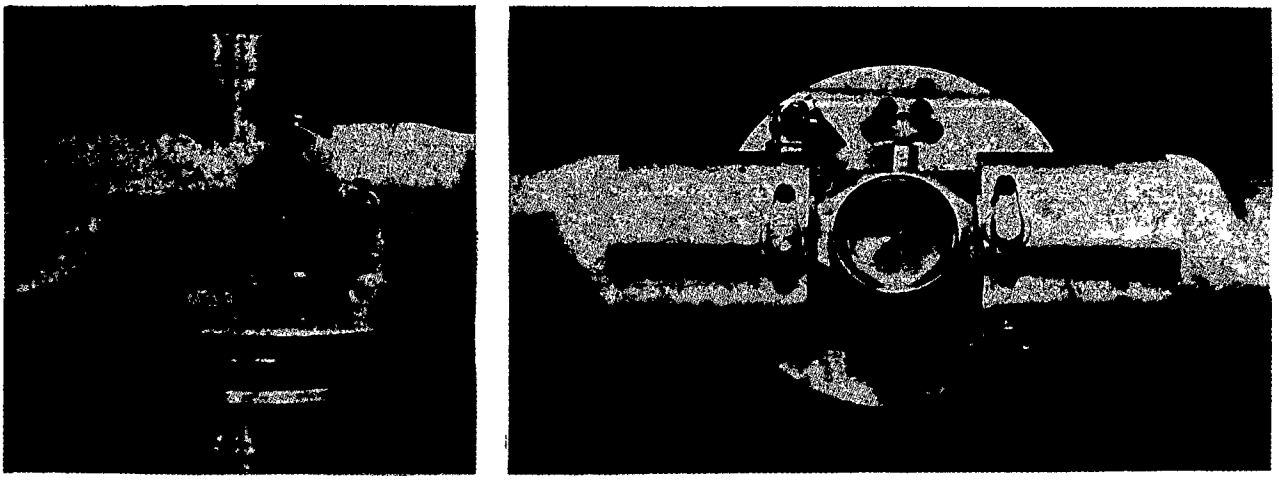

Figure 42.- Two views of hub of Levasseur manually operated propeller.

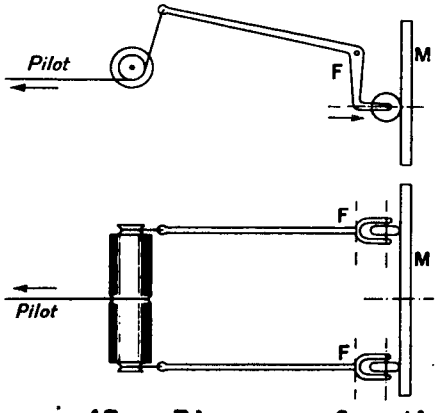

Figure 43.- Diagram of method of operating sleeve M through fork-ended levers F, fitted with rollers.

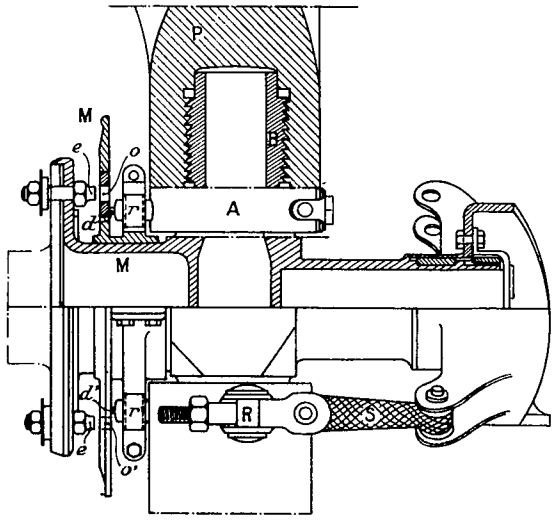

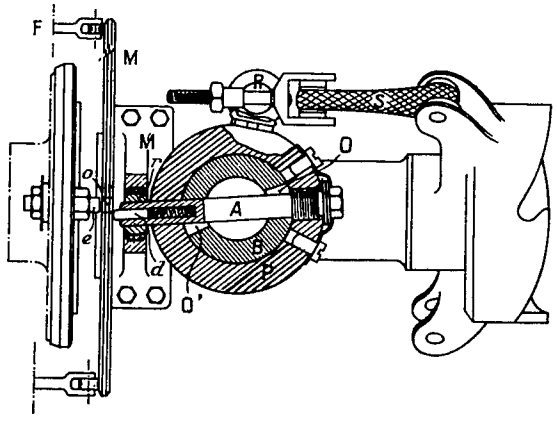

Figure 44.- Diagrammatic elevation and plan views of Levasseur manually operated propeller.

NASA Technical Library
3 1176 01441 1525