MAR 26 1935
Library, L. M. A. L.
~~5341~~
~~Stockholm/1~~
~~Copy 5~~

TECHNICAL MEMORANDUMS

NATIONAL ADVISORY COMMITTEE FOR AERONAUTICS

No. 766

THE AERONAUTICAL LABORATORY OF THE STOCKHOLM TECHNICAL INSTITUTE

By Ivar Malmer

Teknisk Tidskrift, 1933

Washington
March 1935

9.1.1

NASA Technical Library
3 1176 01441 1533

NATIONAL ADVISORY COMMITTEE FOR AERONAUTICS

TECHNICAL MEMORANDUM NO. 766

THE AERONAUTICAL LABORATORY OF THE STOCKHOLM TECHNICAL INSTITUTE*

By Ivar Malmer

HISTORY

At the 1930 session of the Riksdag there was appropriated the sum of 103,000 crowns for the construction and equipment of an aeronautical laboratory at the Stockholm Technical Institute. This was first planned to be an aerodynamic laboratory, but the designation Aeronautical Laboratory was selected, partly because the researches to be conducted there would pertain to aerodynamical problems, and partly because the laboratory would also be used for aeronautical researches of nonaerodynamic nature.

The estimates contemplated, however, the construction and thorough equipment of an aerodynamic laboratory and wind tunnel, 63,000 crowns being appropriated for the building, with the tunnel, and 40,000 crowns for the tunnel equipment, machinery, and measuring apparatus. The original plan contemplated the installation of a 50-horsepower electric motor, estimated to produce an air flow having a velocity of about 36 meters (118.1 feet) per second in the free air jet 1.6 meters (5.25 feet) in diameter in which the measurements were to be made. The apparatus for measuring the air forces was originally intended to be a three-component scale for measuring two components of air force and an air-force moment. Due partly to advantageous discounts and partly to a donation of money from the Swedish railway workshops in Linköping, it became possible in the meantime to equip the wind tunnel with a 100-horsepower power plant producing an air flow with a velocity of 49.5 meters (162.4 feet) per second, and a six-component scale for measuring three components of air force and three air-force moments.

---

*Reprint from Teknisk Tidskrift, 1933.

Owing to certain obstacles in connection with the formalities of the transfer of the necessary site, it was impossible to begin construction of the laboratory until the site question was settled by the Riksdag in 1931. Construction was begun in June 1931. The power plant was first tested at the end of February 1932, following which the air flow in the tunnel was thoroughly investigated during the spring and early summer of 1932, as a part of the work of examination. At the same time, the interior of the tunnel and its contents were arranged in such a way as to obtain maximum uniformity of the air flow in the the free air jet. The weighing apparatus had been finally adjusted in the early part of the autumn of 1932, after which the laboratory could be regarded as fully prepared for practical use. It had already been used for making various measurements, however. Among others, Professor Nøkkentved, of the Polytechnic Institute, Copenhagen, together with Dr. Irminger, made a series of measurements of wind pressure on buildings during June 1932.

The laboratory is located in the northwestern corner of the High School grounds, on Valhalla Street.

The architect of the building was Professor Lallerstedt; like the tunnel, it was constructed of reinforced concrete by the Granite and Concrete Construction Company. The various articles of equipment were planned and constructed mainly by the personnel of the Aeronautic Institute. The electrical equipment was supplied and set up by Asea. The tunnel fittings and various iron structures were furnished by the Swedish railway workshops at Linköping (fig. 1).

The 6-component scale, constructed through the collaboration of the personnel of the Institute with the Stathmos Company, was manufactured at the latter company's workshops at Nynäshamm. The propeller was designed at the Institute and was manufactured by the Central Aeronautic Workshops in Malmslätt.

GENERAL DESCRIPTION OF TUNNEL SYSTEM

The wind tunnel is constructed in accordance with a system first introduced by the Aerodynamische Versuchsanstalt, Göttingen, directed by Professor Prandtl. (See figs. 2 and 3.)

With the aid of a propeller, air is made to circulate through a circular horizontal tunnel interrupted in one place where the air from the throat passes through that of the chamber in a free, horizontal jet. The object whose aerodynamic characteristics are to be determined is placed in the free jet. The arrangement of the tunnel, etc., is shown by figure 2 (horizontal section through the axis of the free jet) and figure 3 (vertical section through the same axis).

The larger part of the tunnel system consists of a cast concrete passage with a square or rectangular cross section. The tunnel's outer walls consist of the walls of the building itself. The walls of the tunnel are lined with polished steel covered with water glass (the floor is covered with "oxanolja") to prevent the formation of dust. The tunnel has four slightly rounded corners. Behind the propeller, near which the cross section of the tunnel is circular, the said cross section becomes square, with dimensions of 2.2 by 2.2 meters (7.21 by 7.21 feet). These dimensions are retained until after the second corner beyond the propeller is reached. Between the second and third corners the tunnel widens rectilinearly until the dimensions of its cross section are 2.4 by 3.2 meters (7.87 by 10.5 feet). The dimensions of the latter are 2.9 by 3.2 meters (9.51 by 10.5 feet) between the third and fourth corners, and are 3.2 by 3.2 meters in the space (pressure chamber) between the fourth corner and the throat. The transition from the square cross section of the pressure chamber to the circular cross section of the throat is effected gradually and continuously by means of concrete filling. Between the free jet and the propeller, the tunnel consists of a cylindrical wooden drum (inside diameter 1.98 meters (6.5 feet)) connected by means of a sheet-iron truncated cone with the concrete tunnel at a point immediately in front of the propeller. A convergent exit cone of aluminum plate is attached to the free end of the wooden drum (fig. 4). The area of the opening of the cone is 15 percent larger than that of the orifice of the throat. Between the drum and the exit cone is a circular opening through which the air carried along with the jet by friction escapes into the surrounding atmosphere.

In order to prevent vibration, three separate S.K.F. bearings are provided for the propeller shaft. (See figs. 2 and 3). The bearing housings directly behind the propeller are supported by means of seven slightly curved sheet-

iron struts, embedded in a sheet-iron ring around the propeller forming a single piece with the concrete. These sheet-iron struts also serve as a means of eliminating the rotation of the air currents behind the propeller. The propeller (see fig. 4) has four blades and is made of wood. Its diameter is 2.18 meters (7.15 feet). The central part of the propeller is enclosed in a streamlined housing of aluminum plate (maximum diameter, 1 meter). This housing is divided into two parts; the front part (or spinner) is fastened to the hub of the propeller and therefore revolves with it, while the rear part is stationary. The propeller and its housing have been dynamically balanced to prevent vibration.

The sheet-metal housing has been found to diminish the tunnel's resistance considerably. On the basis of the resistance values obtained in the Göttingen tunnel without such a housing, the velocity of the jet produced with 100 horsepower is computed to be 45 meters (147.6 feet) per second, while that obtained with the housing is 49.5 meters (162.4 feet) per second, or 10 percent more. Since the required power output is proportional to the jet's velocity, the power required is reduced 30 percent by use of the housing. Such a housing has now been installed and tested in the Göttingen laboratory.

An iron-wire net is fastened in the space between the wooden drum and the sheet-iron cone to protect the propeller from being injured by objects that get into the air flow. This net was at first comparatively coarse-meshed (40 mm (1.57 in.) meshes), but since it was found that a 50 gram (0.11 lb.) weight dropped into the air jet could break large chips from the tips of the propeller blades, the net has been replaced with one having finer meshes (13 mm (0.51 in.)). Owing to the increased resistance thus produced, however, the maximum velocity has fallen to 47.5 meters (155.8 feet) per second.

In the four corners of the tunnel there are installed sets of cylindrically curved guide rails (fig. 5) of sheet iron 3 mm (0.118 in.) thick, which are attached to anchor rails in the roof and floor in such a way that their position can be adjusted. This possibility of adjustment has been utilized to distribute the velocity throughout the cross section of the air jet in the desired direction by changing the angle at which the guide rails were adjusted. It was possible in this way to considerably reduce the percentage variation in velocity found at the time of the

first adjustment. The guide rails are supported by two draw bands on each side. They are closer together and have less depth in the fourth corner than in the others. Their dimensions and final adjustment are shown in table I.

A so-called straightener or honeycomb (fig. 6), the object of which is to eliminate eddies and parallelize the air flow as far as possible, is placed between the walls of the pressure chamber. This honeycomb is constructed of sheet-iron strips 20 cm (7.87 in.) deep, every other one being smooth and every other one corrugated. The sheet-iron strips are suspended from an anchor box sunk in the roof and are pressed against each other in a position parallel with the walls.

The smooth and corrugated strips are fastened to each other in pairs by means of small rivets a considerable distance apart. There are in the whole honeycomb about 13,000 channels, through which the air flow can pass.

Upon measuring the velocity at a number of points in the tunnel having different cross sections, it was found that a slight rotation of the air current within the tunnel occurred about the latter's axis when the arrangements were as just described, so that the guide rails behind the propeller were not wholly performing their task. Since all the curved metal plates at the corners may be deemed to reduce the horizontal transverse component of the velocity but to leave the vertical component unaffected, there is installed between the first and second corners a system of horizontal plates to reduce the vertical component. It was found that this arrangement almost eliminated the rotation in the tunnel and favorably affected the distribution of velocity in the air jet. The rotation itself was otherwise eliminated by the honeycomb, but this was incapable of correcting the distribution of velocity. On making these detailed measurements of velocity in the tunnel, it was found that the blanketing on the part of the propeller's axis situated between the guide rails in the first corner and the wall beside the motor and laterally crossed by the air current, occurred throughout the tunnel and participated in the rotation. This part of the axis was then enclosed in a streamlined sheet-iron housing, causing the effect of the blanketing to disappear.

The free air jet is shaped by a cast-steel throat, turned on the inside. The smallest cross section of the

throat is located 320 mm (12.6 in.) from its mouth. Outside this cross section the throat becomes slightly wider and cylindrical in form. The length of the cylindrical part is 160 mm (6.3 in.), its diameter is 1,584 mm (62.36 in.), and the minimum diameter of the throat is 1,568 mm (61.73 in.). The widening of the throat in this way was based on the experiments at Göttingen and its object was to counteract the contraction of the free jet. At first the diameter of the cylindrical part was 1,600 mm (63 in.) and the minimum diameter of the throat was thus 2 percent less than its diameter at the mouth. Since there was reason to suspect that the difference was somewhat too great, it was reduced to 1 percent by applying a coating of graphite paste made by mixing graphite with water glass to the part in front of that having the smallest cross section; after it had hardened, this coating was made smooth by means of a steel mold. We shall, obviously, not be far wrong if we assume that the diameter of the jet is 1.6 m (63 in.).

The throat rests on a steel globe and is held in place by two clamps with adjusting screws. The narrow gap between the throat and the mouth of the tunnel is closed by means of a rubber tube. The throat is moved in a vertical and lateral direction until the jet is horizontal and is directed toward the center of the exit cone. Its horizontal direction is determined by the balancing of the air forces upon a wing placed in two positions, reflecting each other with reference to the horizontal plane. The adjustment of the base of the scale in the lateral direction (angle of yaw = 0°) is effected by equalizing the weighings on an upright wing with the vertical plane as reference.

The tunnel is divided into several sections by the curved metal corner plates and honeycombs. Access to the different sections is afforded by a number of openings in the walls of the tunnel, which are provided with sheet-iron doors opening inward.

In winter the air in the tunnel is heated by two horizontal hot-water pipes along the outer wall, one near the floor and one near the roof. When the system is in operation, little heat is required as the air is heated several degrees by operation.

THE ELECTRIC POWER PLANT

It must be possible to vary the number of revolutions of the propeller per minute during and prior to the variation in the velocity of the jet. In foreign laboratories a direct-current motor with resistance regulator is generally used. A 50-horsepower motor would probably have been connected with the city's direct-current system, but it was impossible to do this with a 100-horsepower motor. Under these conditions it proved much less expensive to install an adjustable alternating-current motor - a so-called "synchronous or Schrage" motor - than a direct-current motor and transformer combination. The operating costs are perhaps somewhat, but not much, greater when the synchronous motor is used.

Owing to the intermittent operation of the laboratory system, however, this difference in operating costs is not an important factor. For these reasons, a 100-horsepower Schrage motor manufactured by Asea was chosen (fig. 7). I have to thank Civil Engineer Spaak, of Bergvik, for the suggestion that a motor of this type be selected.

The motor can be adjusted to between about 60 and 1,000 r.p.m. Up to 400 r.p.m., the adjustment is effected by means of a 14-step resistance by means of which the jet's velocity can be correspondingly adjusted at between about 3 and 18 meters (9.84 and 59.05 feet) per second. When the r.p.m. exceeds 400, the adjustment can be effected continuously by twisting the brush around the commutator. This is done by means of an auxiliary motor, operated in both directions by means of press buttons on a desk in the laboratory. The adjustment of velocity when the latter exceeds 18 meters per second is therefore also continuous, which may be considered advantageous as compared with the adjustment by steps in the case of the direct-current motor.

The propeller's power absorption in air of normal density is 97 horsepower when the motor is adjusted for 1,000 r.p.m. The exact number of r.p.m. is 1,015 in this case. A power absorption of 100 horsepower therefore corresponds to 1,025 r.p.m. instead of the 1,000 r.p.m. estimated. The necessary uncertainty as to basic data when designing the propeller thus led to an error of a little more than 2.5 percent with regard to the number of revolutions per minute.

The current is received at a voltage of 6,000 through an encased control device manufactured by Asea (fig. 8) and is stepped down to 220 volts.

THE AERODYNAMIC SCALE

The apparatus for measuring the air forces acting upon the models is, as already stated, a 6-component scale. It consists of six scales, four of which are coupled in pairs in a manner to be described later.

The apparatus itself is placed upon a traverse (see figs. 9 and 3), which can be moved laterally over the jet. The scales are mounted on a base resting on a ball-bearing race 2 m (6.56 ft.) in diameter attached to the traverse, and can thus turn on a vertical axis. To the same base there is also fastened a framework that encompasses the jet. The model is fastened to the arms of this framework by means of wires, in a way which will be described later. The model is also suspended by wires from the scales overhead. The side-angle adjustment (angle of yaw) of the model can be altered by turning the whole base, with the framework, about the vertical axis. Since the position of the model with reference to the walls is not changed thereby, the forces and moment are measured at different angles of yaw with reference to one and the same system of axes. To completely prevent the framework from springing out, owing to the effect of the forces from the model, there has been provided at the bottom in the center of the framework an adjustable device by means of which it can be locked to the floor, at the same time permitting the framework to be rotated.

The side angle is read off on a scale on the ball-bearing race. The zero position of the scale has been determined in the manner previously described by measuring the air forces acting upon a wing model placed in various vertical positions.

The principle of the weighing system is shown in figure 10. The model (model of wing in the figure) is suspended from the three wires a_1, a_2, and b. In doing this, the model is preferably placed in such a position that the vertical transverse force is directed downward. The wire b is suspended from a scale that obviously weighs a part of the vertical transverse force (lift) acting upon the

model, and also shows the moment about a transverse axis through the points at which the wing is fastened in front when the moment arm is known. The wires a_1 and a_2 are suspended from a scale R (see fig. 11) by means of an intermediate crossbar h and the two rods m_1 and m_2, with two scales graduated according to the decimal system fastened between them, the base supporting the balance R being in turn suspended from a second scale U (fig. 11). If the scale R is kept motionless, the scale U indicates the combined forces in the wires a_1 and a_2. The combined forces in the wires a_1, a_2, and b then indicate the vertical transverse forces (lift). The balance U is called the lift scale. If the balance U is kept motionless and the scale R is attached so that it can move freely, the latter indicates the differences between the forces in m_1 and m_2 (in tenths). When the distance between m_1 and m_2 is known, we can therefore obtain the rolling moment on the model. U is therefore designated as the rolling-moment scale. The base of the scale R is kept parallel by means of two rings, which therefore absorb the rolling moment during the weighing in scale U.

The scale which measures the forces in b (the pitching moment scale) can be raised and lowered by means of a rotatable parallelogram device. When this device is turned, the model is also turned in the vertical plane. The angle of incidence of the air upon the model can thus be adjusted. The angle of incidence is read off on a graduated scale on the axis on which the scale turns. This rotation is effected with the aid of a spiral adjusting device.

The air resistance in the direction of the model's longitudinal axis is transmitted to the downward directed tensile forces in the wires e_1 and e_2 by means of the horizontal wires c_1 and c_2 (see fig. 10) and the two bracing wires d_1 and d_2, the lower ends of which are fastened to the aforesaid framework (A). The sum of these forces and the difference between them is weighed by means of the intermediate crossbar k and the rods n_1 and n_2 in a pair of scales just like U and R. These two scales therefore indicate the drag and the yawing moment. Lastly, the wire g, which is passed over some pulleys on ball bearings, transmits the laterally directed transverse forces to a transverse-force balance. The function of the wires f_1 and f_2, to which weights are attached, is to keep the model in position. The model and the tensile weights bearing on the scales are weighed

in motionless air for all the angles of incidence at which the measurements are made in the air jet, whereupon the purely aerodynamic forces are obtained as the difference.

The two intermediate crossbars h and k are fastened to the framework by means of horizontal wires (which do not prevent slight oscillations in the vertical direction), so that they will not oscillate in consequence of the action of air flow outside the jet.

The devices by means of which the wires a and e are attached to the crossbars h and k can be moved in a lateral direction, as can the fastenings of the wires d and the pulley wheels for the bracing wires f. The gage of the wire system can thus be quickly changed and adjusted to the different spans of the models. The wires are fastened to the wing models by means of a small concentration ring affixed with small screws to the ends of the wings in such a way as to disturb the air flow about the wing as little as possible. When this is done differently, the usual method is to fasten the wires to "tongues" attached to the front edge of the wing. In this case no change need be made in the gage.

It is important that the wires a, b, and e be vertical, and that the wires c, as well as the part of the transverse-force wires g attached to the wing, be horizontal during the weighings, so that the results of the latter will not be affected by undue components of force. When adjustments are made, there is first regulated, by means of adjusting screws, the lengths of a and e, until the four points at which these intersect with the two wires c lie in the same horizontal plane (determined by means of levels). Then the lengths of the wires d are regulated by means of adjusting screws until a_1 and a_2 are perpendicular. This is determined by means of a sight with hair diaphragm mounted on the framework, the position of the sight being adjusted once and for all.

The stretching of the wires during weighing can be corrected. The wires used in the usual wing experiments were ordinary piano wires 0.8 mm (0.03 in.) thick. The drag on the wires is determined by weighing without the model.

Figure 12 shows the appearance of the weighing apparatus. The sensitivity of the scale can be adjusted by sliding in the vertical direction adjustable weights at-

tached to frames fastened to the scales. Rather great variations in sensitivity must be possible so that the latter can be adjusted to different wind velocities or air forces. If, for instance, we examine the lift scale, it will be noted that its oscillations are unstable when the weighing scales themselves are in a state of only slightly unstable equilibrium. When, for example, the front edge of a wing swings downward, the angle of incidence of the wing, and therefore the transverse forces acting on it, are increased. This increase further tips the scales. The scale must therefore be stabilized by a relatively great lowering of its center of gravity, this being necessary in a different degree at different wind velocities. Owing to the geometrical arrangement of the wires, on the other hand, the oscillations of the drag scale become very stable, so that this scale must be rendered unstable by means of sliding weights to prevent it from being too insensitive.

The weighing is effected partly through the use of fixed, and partly through that of sliding, weights. With reference to the forces which are to be weighed, the scales are all decimally graduated so that the same set of weights can be used for all the scales.

Liquid dampers with a variable damping effect are installed for the purpose of damping the oscillations.

The traverse can easily be rolled to one side by means of a spiral adjusting device so as to leave room for other equipment needed for the experiment. A disk is fastened to the floor beneath the jet by means of a ball-bearing race 2 m (6.56 ft.) in diameter in which it can be rotated. To this disk is attached the base for the rest of the equipment used in the experiment, and the disk, since it can be turned, makes possible an adjustment in the lateral direction (adjustment of angle of yaw). Beneath the disk is a concrete-lined, cylindrical hole 1 meter deep. When the disk is removed, this hole affords room for weighing apparatus, in case, for example, it should be found expedient during certain experiments to place such apparatus beneath the jet. Figure 13 shows an experimental device affixed to the disk for measuring the wind pressure on the model of a building (experiment of Professor Nøkkentved and Dr. Irminger).

The free jet, unlike a wholly enclosed wind tunnel, permits the rapid exchange of the experimental apparatus without moving the mountings of the models. This consti-

tutes an advantage of the free jet which makes it especially suited for a high school institute, where several groups of students are to examine the operation of the system simultaneously.

THE QUALITY OF THE JET AND THE OUTPUT FACTOR OF THE TUNNEL*

An ideally free jet should be characterized by exactly the same velocity at various points of the cross section and by a complete parallelism of the air flow. In practice, it has been impossible to attain this ideal by means of any arrangement for producing the jet. What we must strive to attain is a condition approximating this as nearly as possible.

Owing to the fluctuations in the voltage of the current feeding the motor, the average velocity of the jet is always undergoing slight changes. Since it always takes some time to effect measurements of velocity at a large number of points in the jet's cross section, it is necessary when comparing velocities to take the same average velocity as a basis. The average velocity can be regarded as determined by the excess ststic pressure of the air in the pressure chamber.

The isobars shown in figure 14 have been derived in this way from a series of measurements. The isobars relate to the maximum velocity or the dynamic pressure in a section of the jet 100 cm (39.37 in.) from the opening in the throat when the motor is adjusted for 725 r.p.m. The figures show the maximum velocity in millimeters of alcohol-column pressure. The measurements represent the condition prevailing after adjustment of the corner plates. The differences between the maximum velocities at different points were considerably greater during earlier stages of arrangement (trimming) of the tunnel.

The percentage differences between the maximum velocities are twice as great as the corresponding percentage differences in the (mean) velocity. If only the core of the jet (half the diameter of the jet) in which the model

---

*The mathematical data and curves in this section are derived from comprehensive investigations of air-flow conditions in the tunnel made by the present civil engineers, S. Werner and T. Edlen.

is placed is considered, the variation in velocity is relatively small. Figure 15 shows the limits of the sections in which the maximum local variations in velocity are approximately 0.5 percent and 1.0 percent, respectively. In most experiments the model is placed in the section where this variation is about 0.5 percent. For the purpose of comparison, we shall state the results obtained in a tunnel of about the same size (diameter of jet 5 feet) at the Royal Aircraft Establishment in England, where the variation in velocity within a core comprising 4/5 of the jet's diameter was found to be about 1.25 percent. The variation in velocity within the corresponding core here was found to be the same. On the whole, the distribution of velocity is regarded as very satisfactory.

A criterion as to the parallelism of the air flow can be obtained by measuring the static pressure at various points along the jet. During convergence of the air flow (contraction of the jet), the static pressure diminishes as the air flow moves on. The results of measuring the static pressure at various points in the axis of the jet are shown by the curves in figure 16. Measurements of the static pressure at different points in the diameter of a cross section showed a constant static pressure over the whole section with exception of a thin boundary layer. There was a slight excess pressure in the interior of the jet in comparison with that in the surrounding atmosphere (hall), while the pressure in the boundary layer was slightly below that in the latter.

It appears from figure 16 that the static pressure in the jet decreases from the opening in the throat at the entrance cone to a point somewhat more than half the length of the jet, and then increases toward the mouth of the exit cone. There thus occurs a slight contraction of the jet. The (gradient) of the fall in pressure is singularly low, however, outside the section nearest the opening in the throat. For a velocity of 35 meters (114.83 feet) per second, the fall in pressure between a point 30 cm (11.81 in.) from the said opening and another 120 cm (47.24 in.) from it is about 0.04 mm (0.0016 in.) water-column pressure per decimeter. This means that an object placed in this part of the jet undergoes a static pressure in the direction of the jet, owing to the latter's contraction, of 0.4 gram/dm^3 (0.0000143 lb./cu.in.) of volume. The volume of an ordinary wing model is approximately 2 dm^3 (122 cu.in.), and it is consequently subjected to a static

pressure of less than 1 gram (0.0022 lb.). This static pressure is unimportant in comparison with the amount of the dynamic resistance, and is within the limits of error for the weighing of resistance.

The course of the static-pressure curve can be affected by changing the shape of the throat. The making of a circular hole in the exit cone for the purpose of permitting the escape of a part of the air carried along in the boundary layer, was also found to affect the course of this curve, especially in the part of the jet nearest the exit cone. As the present course of the curve may be regarded as satisfactory, any changes in the throat other than those previously mentioned were regarded as unnecessary. Within the section of the jet in which the airplane model is placed, the maximum variation in the static pressure is about ±0.1 percent of the dynamic pressure.

To judge of a tunnel plant's efficiency from the viewpoint of economical operation, it is customary to determine the ratio between the power output of the motor and the kinetic energy of the air in the jet. The lower this ratio is, the more efficient is the plant considered. This ratio is called the "output factor." A low output factor means that the losses due to resistance in the different parts of the tunnel are small. The output factor is naturally determined by the absence of obstacles causing resistance (models) in the jet itself.

Measurements have been made in the High School tunnel with the propeller making 400, 725, and 1,000 r.p.m. The output factors were 0.52, 0.53, and 0.50, respectively. In the case of the Göttingen tunnel, where there was no housing about the center of the propeller, the output factor was 0.68, or about 30 percent greater.

It is interesting to know how the losses due to resistance are distributed through the various parts of the tunnel system. In investigating this, it is possible to start by assuming (probably on the basis of computations) a certain degree of efficiency of the propeller. The losses in different sections of the tunnel can then be estimated as proportional to the diminution in the total pressure (sum of the dynamic and static pressures), and the sum of the losses is equal to the power output of the propeller (efficiency times power absorption). The losses of output in the various sections can be computed in this manner.

When the measurements were effected, there was employed, instead of the procedure just described, the method consisting in determining the amount of the output at different cross sections of the tunnel by obtaining the product of the total pressure times the volume of the air flow passing through each second. The product was determined by integration over the cross section. The power output of the propeller was found by obtaining the difference between the results of measurements in the sections immediately in front of and behind it, respectively. By comparing this with the propeller's power absorption it was thus possible to obtain the experimental value of the propeller's efficiency. The value of the propeller's efficiency thus obtained is much below that usually accepted. Thus, the propeller in the Göttingen tunnel was assumed to have an efficiency of 80 percent, while that determined here in the manner described was 64 percent. The difficulties encountered in making measurements in the immediate vicinity of the propeller presumably resulted in fixing too low the experimentally obtained value of the efficiency. This therefore means also that the value of the losses of power obtained by measurement in one or more sections of the tunnel were too low. Slight errors may have occurred with respect to every section of the tunnel, but it may be assumed that the error is greatest for the section between the propeller and the first corner, where it was especially difficult to make measurements. With these reservations, the results of measurements made with a superinduced output of 37.4 horsepower are shown in table II.

TABLE II

Losses of Output in Various Parts of the Tunnel

	Horsepower
Propeller	13.4
Wider section behind the propeller	2.65
First corner	1.35
Second corner	1.35
Long passage	.55
Third corner	.7
Fourth corner	.4
Honeycomb	1.0
Throat	.7
Free air jet, exit cone, and drum	14.9
Protective net (coarse-meshed)	.4
Total	37.40

The velocity of the jet when the axial output was (with the coarse-meshed protective net) 37.4 horsepower, was 35 m (122.7 ft.) per second.

By stating the losses in fractions of the energy of velocity of the air passing out through the throat each second, we obtain table III, which also comprises, for the sake of comparison, the results obtained in the Göttingen tunnel and the afore-mentioned English tunnel (R.A.E.). The total of the coefficients of loss equals the output factor.

TABLE III

	Royal Technical H.S.	Göttingen	R.A.E.
Free jet, exit cone and drum	0.21	0.26	0.22
Propeller	.19	.14	0.03 to 0.04
Wider section behind propeller	.04	.17	.02
The four corners	.05	.06	
Passages, honeycomb and protective net	.04	.05	0.11 to 0.10
Σ = output factor	.53	.68	.38

It is interesting to observe that the proportionate losses in the corners were about the same in the High School tunnel as in that at Göttingen. The corner plates in the former are, as has been stated, rounded sheet-iron plates, while those in the latter are of cast concrete and have a wing-shaped section profile. It therefore appears that nothing is to be gained by streamlining the cross sections of the guide vanes. It is also a striking fact that the losses due to curvature of the air flow in the sharp corners are especially small.

The wind tunnel has been in operation since the summer of 1932. It is constructed in accordance with the Göttingen system.

The diameter of the jet is 1.6 m (4.92 ft.) and the maximum output is 100 horsepower at 1,000 r.p.m.; the maximum velocity of the jet is 49.5 m (162.4 ft.) per second. After a protective net with finer meshes had been installed, however, the velocity was reduced to 47.5 m (155.8 ft.) per second. The output factor of the tunnel is 0.53. The velocity of the core of the jet (diameter of core half that of the jet) varies about 0.5 percent. When the diameter of the core is 0.80 that of the jet, the variation is approximately 1.25 percent. The gradient of the fall in static pressure in the direction of the jet in the section where the model is placed is 0.04 mm water-column pressure per decimeter.

The power unit is a Schrage-system synchronous motor for a 220-volt alternating current. The number of revolutions per minute (and consequently the velocity) can be altered continuously between 400 and 1,000 r.p.m. Below 400 r.p.m. (18 m (59.05 ft.) per second) the velocity can be changed by steps (14 steps) so as to vary between 3 and 18 m (9.84 and 59.05 ft.) per second.

It is proposed to publish information received in future concerning the Institute in the Teknisk Tidschrift (the Journal of the Society of Swedish Engineers).

Translated in Office of M.I.D.,
War Department.

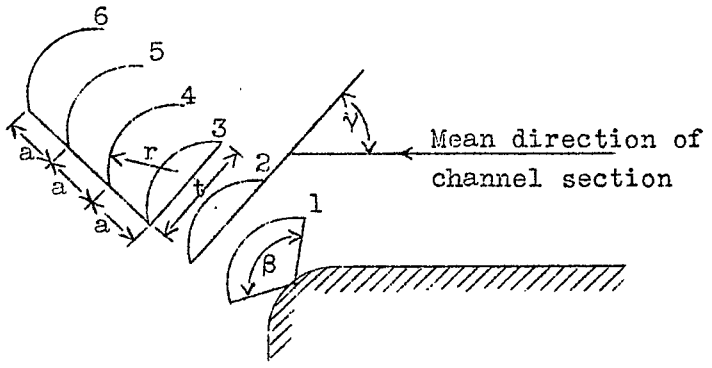

Table I
Dimensions and adjustment of curved wall-plate.

Corner	Plate	γ^{o}	r_{mm}	t_{mm}	a_{mm}	β^{o}
I	1-11	47.0	300	515	250	110
II	1-11	46.0	300	515	250	110
III	1-6	46.5	300	515	250	110
	7,8	45.5	300	515	250	110
	9-14	44.5	300	515	250	110
IV	1-12	46.5	200	343	166	115
	13-25	46.0	200	343	166	115

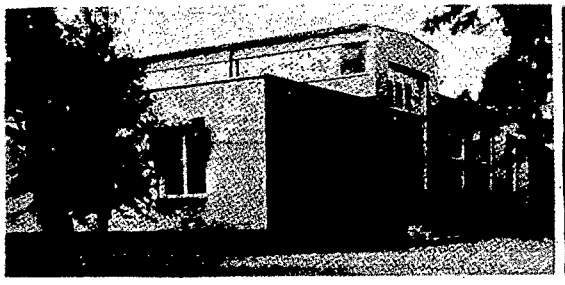

Figure 1.-Aeronautical Laboratory of Technical High School.

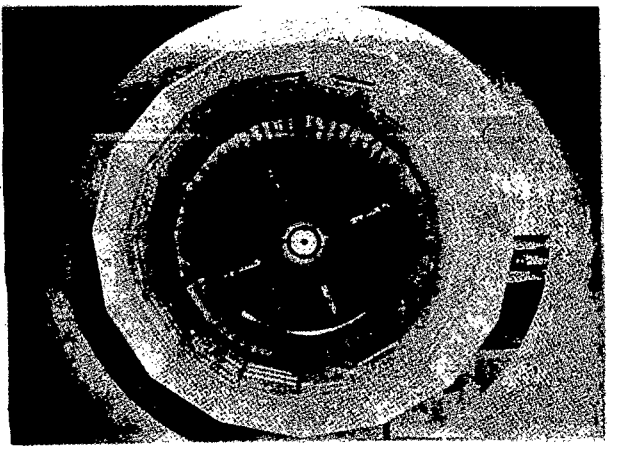

Figure 4.-Entrance cone, wooden drum and propeller with housing, seen from pressure chamber through throat.

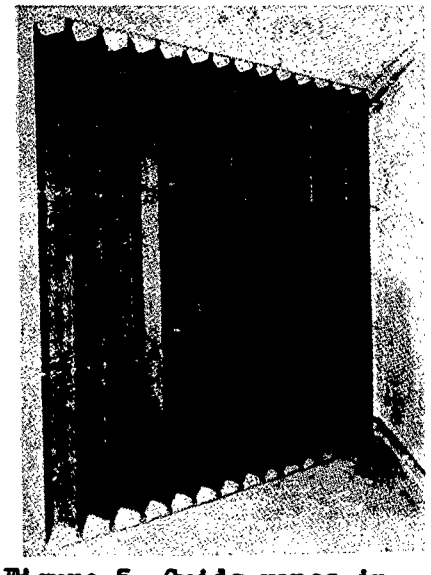

Figure 5.-Guide vanes in corner of tunnel.

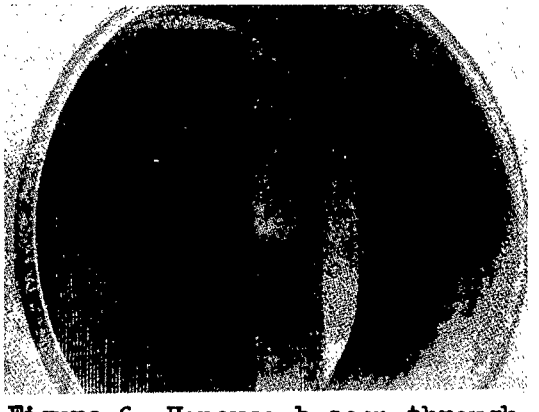

Figure 6.-Honeycomb, seen through throat.

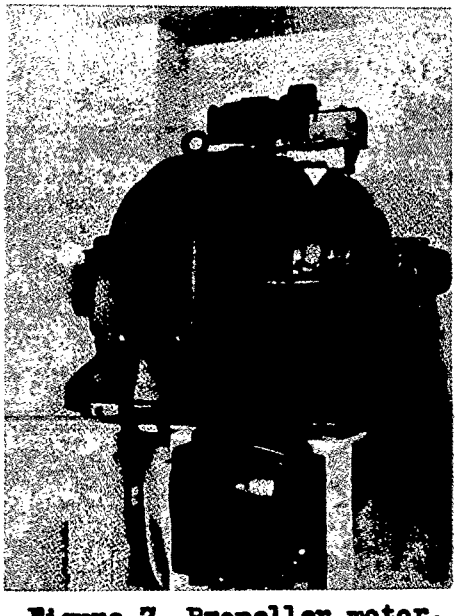

Figure 7.-Propeller motor.

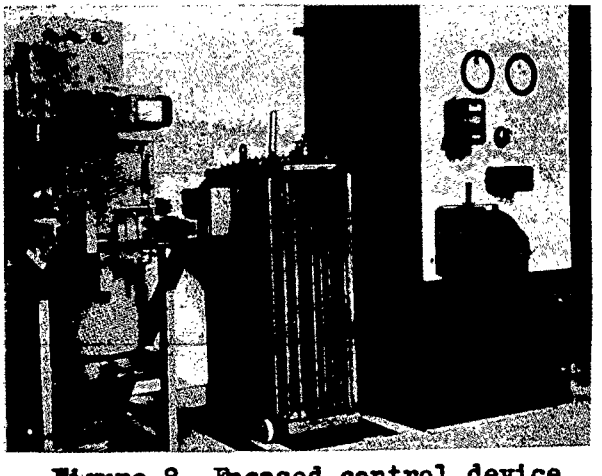

Figure 8.-Encased control device, transformer and instrument board.

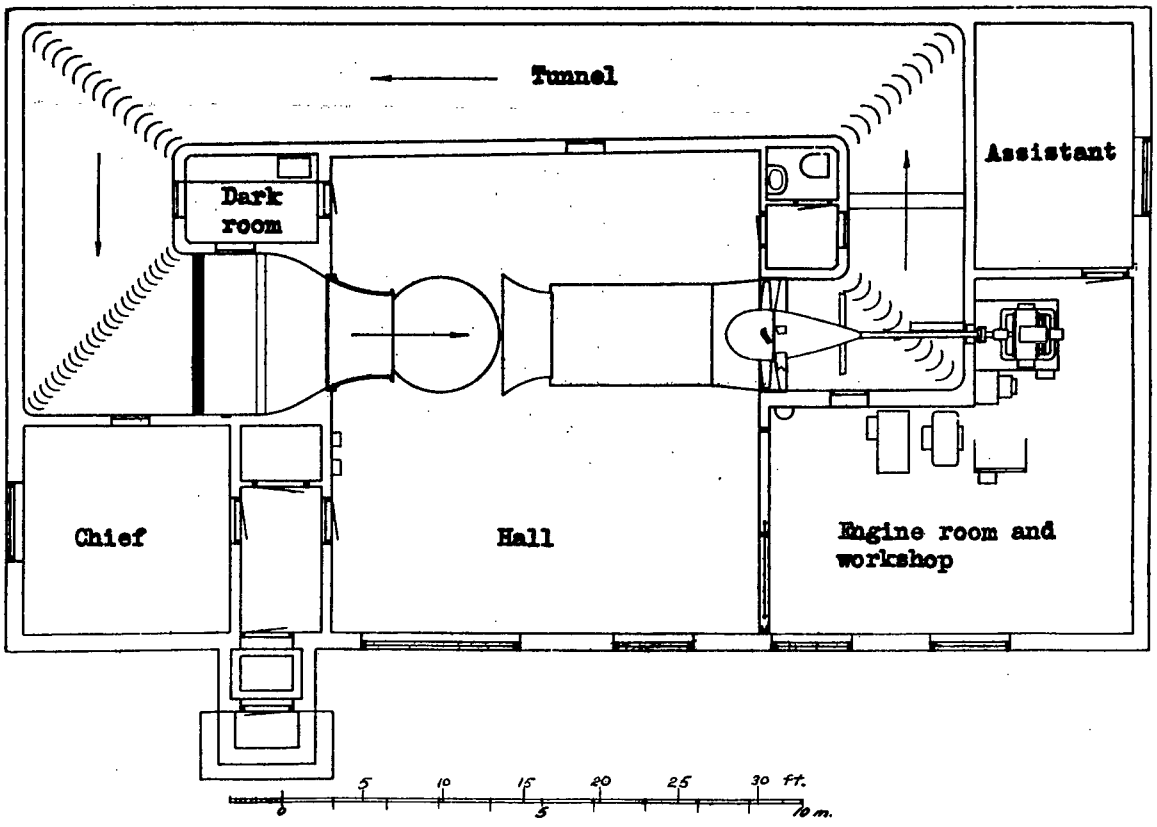

Figure 2.-Plan of laboratory.

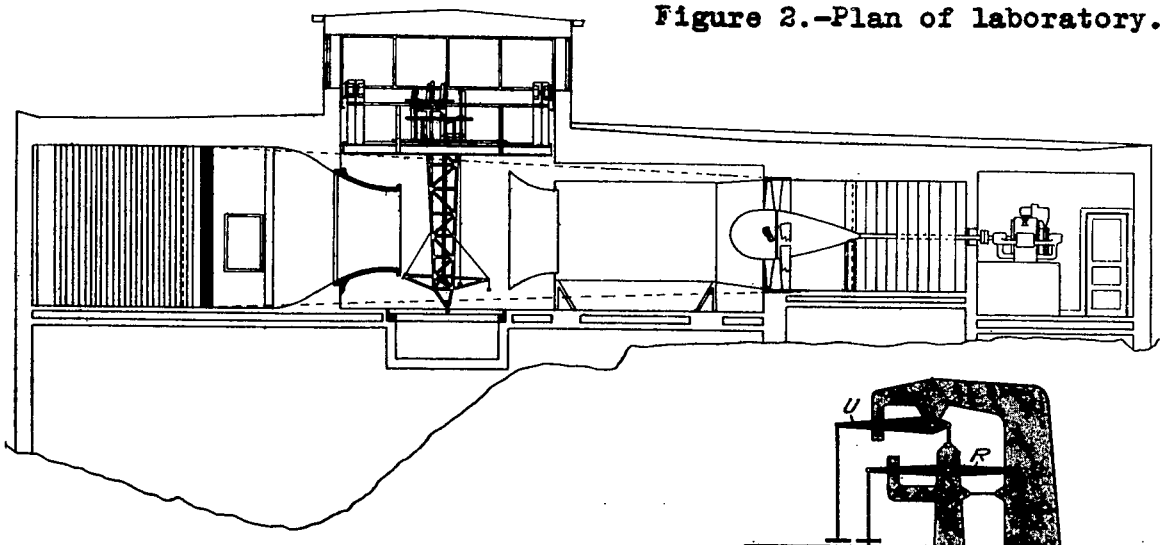

Figure 3.-Vertical section through axis of jet.

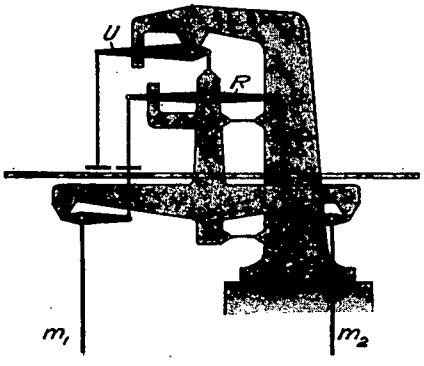

Figure 11.-Diagram of weighing apparatus.

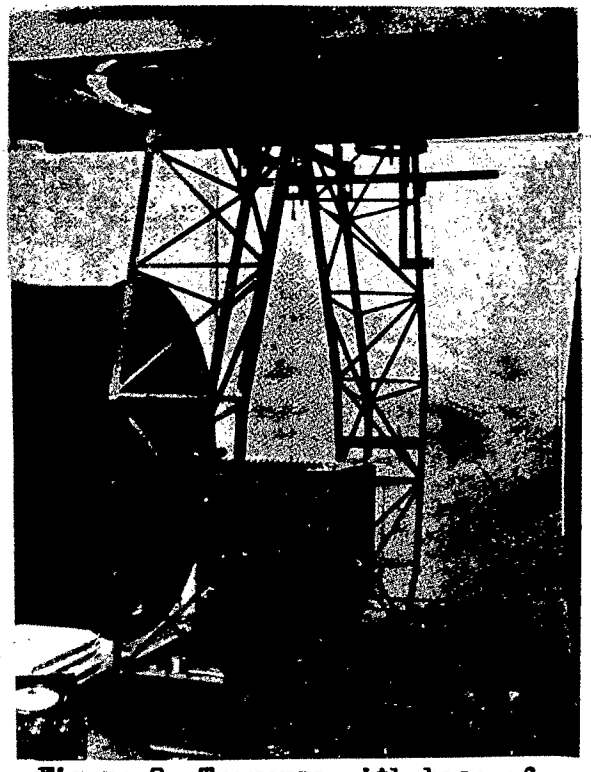

Figure 9.-Traverse with base of balance and framework.

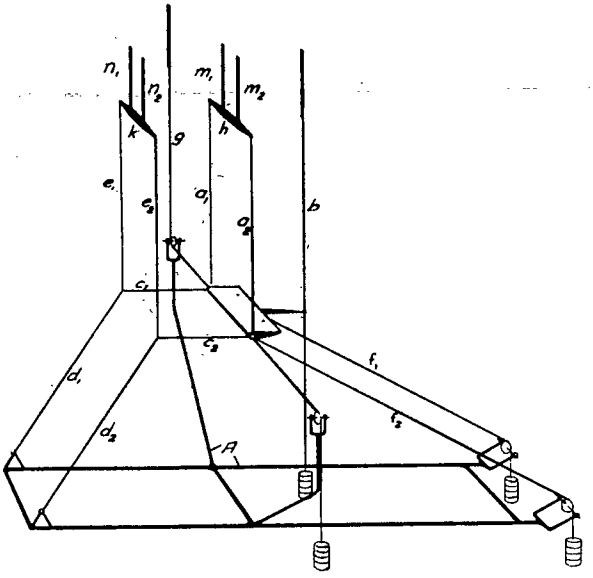

Figure 10.

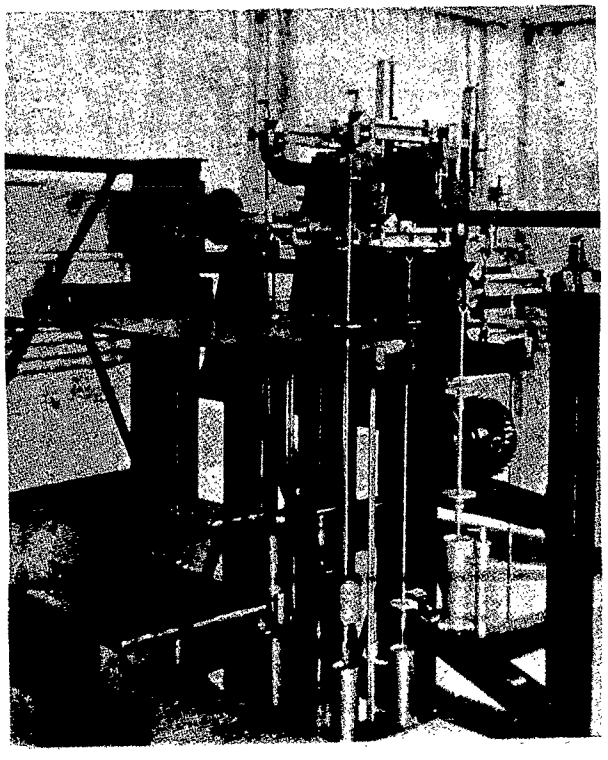

Figure 12.-Six-component balance.

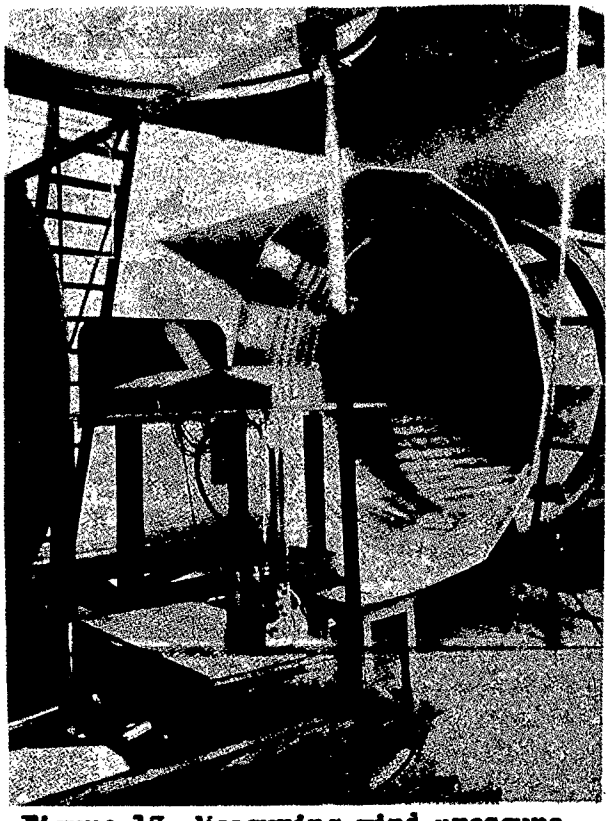

Figure 13.-Measuring wind pressure on model of house.

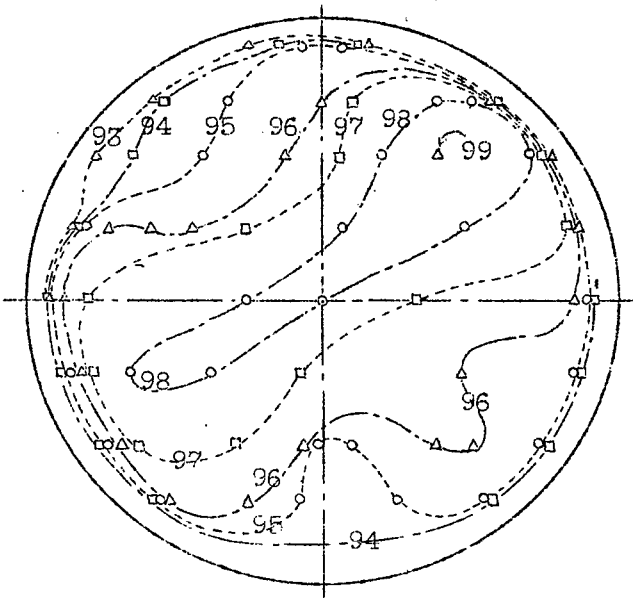

Dynamic pressure in free jet.

(in mm, alcohol column pressure 0.812).

100 cm from throat.
n = 725 r.p.m.

Figure 14.-Contour of throat.

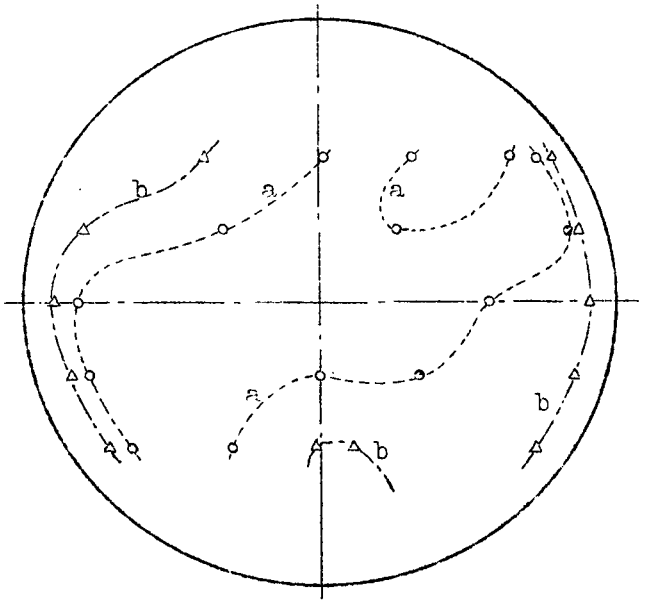

Difference in velocity in the free jet.

100 cm from the throat.
n = 725 r.p.m.

Section with lines "a" variation ± 0.5 %

Section with lines "b" variation ± 1.0%

Figure 15.-Contour of throat.

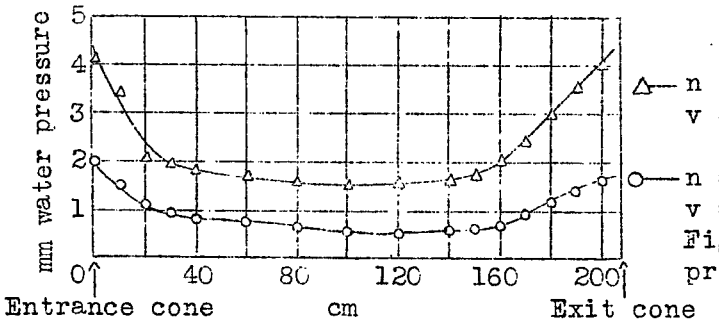

△— n = 1000 r.p.m.
v = 49.5 m/s

○— n = 725 r.p.m.
v = 35 m/s

Figure 16.-Excess static pressure along center line of jet.

NASA Technical Library
3 1176 01441 1533