REPORT No. 529

A FLIGHT INVESTIGATION OF THE SPINNING OF THE F4B-2 BIPLANE WITH VARIOUS LOADS AND TAIL SURFACES

By N. F. Scudder and Oscar Seidman

SUMMARY

A flight investigation of the spinning of the F4B-2 single-seat fighter airplane was made for the purpose of finding modifications that would eliminate dangerous spin tendencies exhibited by this type of airplane in service. The effects on steady spins and on recoveries of changing the loading, enlarging the fin areas, changing the elevator plan form, and raising the horizontal surfaces, were determined. Five fin sizes, two elevator plan forms, and three vertical positions of the horizontal surfaces were tested with four airplane loadings corresponding to different service conditions for which the airplane may be used. The effect on recovery of various methods of control manipulation and the immediate effect on various spin parameters of deflecting one or more of the controls from the normal setting were determined. The flight results were analyzed and compared with the results of spinning-balance tests of a model of the subject airplane.

The variations of loading did not materially affect the steady spin or the recovery. Increasing the fin area progressively improved ease of recovery but had little effect on the steady spin; and modifying the elevator to diminish interference had little beneficial effect. Raising the horizontal surfaces gave the most pronounced beneficial effect on recovery, making possible recoveries in less than one turn. The alterations made to the horizontal and vertical surfaces for the tests did not introduce undesirable flying characteristics. Flight tests and model tests were in general agreement but there were apparent discrepancies in certain details, particularly in regard to the comparative merits of several ways of manipulating the controls for recovery.

Dangerous spins were encountered during the tests as a result of displacing the controls, particularly the rudder, away from the usual position for the normal spin. Observations of the manner in which these dangerous spins were started indicated the probable conditions under which trouble had been experienced with this airplane in service.

INTRODUCTION

At the request of the Bureau of Aeronautics, Navy Department, a series of tests of the spinning of the F4B-2 airplane was undertaken by the National Advisory Committee for Aeronautics. Information was desired regarding the simplest means of satisfactorily correcting the bad spin characteristics that this type of airplane had exhibited in service. Following the completion of the tests specifically requested, which were reported to the Bureau of Aeronautics in January 1933, further tests of a more general nature were made as part of the spin-research program being conducted by the N. A. C. A. Part of this work was the measurement, by means of the spinning balance, of the forces and moments acting on a model of the airplane during spinning motion. The model tests have been reported in reference 1; the present report gives an account of all the flight tests.

The flight tests permitted a comparison between the effects on the spin of 4 different service loading conditions, 5 different fin areas, 2 elevator plan forms, 3 different stabilizer and elevator locations, and various amounts of rudder deflection. Four different classes of measurements and observations were made: The number of turns required for recovery were determined for every condition tested; records were made for the steady spin and analyzed for their agreement with previous tests; time histories of seven of the spins were prepared to show the immediate effects of control-surface displacements; and, in every case in which circumstances indicated the advisability, observations were made regarding the effect of the changes to the airplane on handling characteristics in normal and acrobatic flying.

The study of the effects of the foregoing modifications was facilitated by having available the results of spinning-balance tests on a model of the airplane with two of the fin and rudder combinations used in flight (reference 1) and the results of tests on another model (reference 2) with the horizontal surfaces mounted in

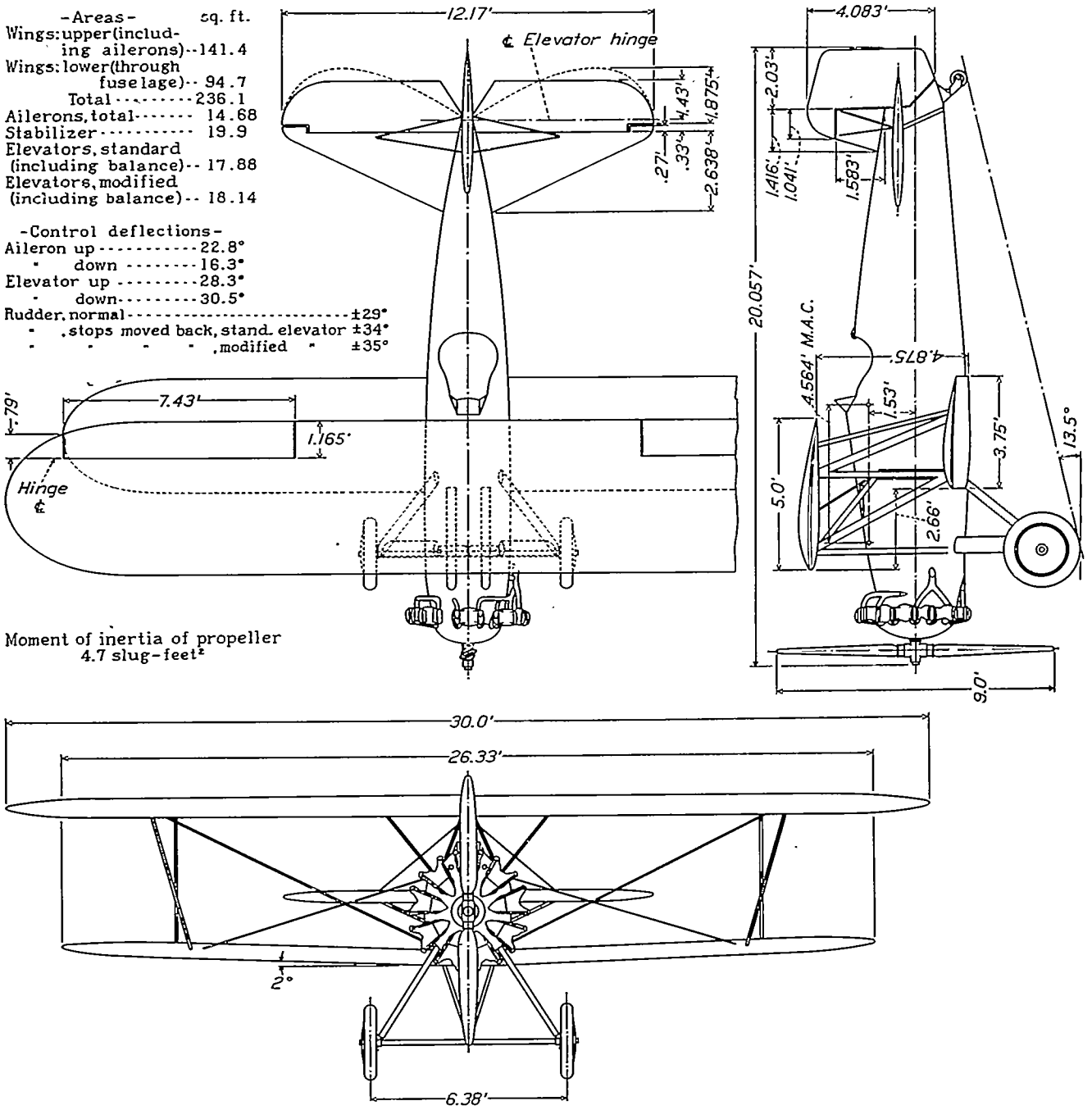

FIGURE 1.—Three-view drawing of the F4B-2 airplane and modified elevator.

several positions. The results of the tests of the first reference were directly comparable and those of the second, though made on a different model, could be applied qualitatively with certainty.

APPARATUS AND METHOD

The airplane with which these tests were made was a carrier fighter biplane powered with a 450-horsepower Pratt & Whitney engine. A line drawing showing the arrangement and dimensions of the airplane is given in figure 1.

The several combinations of vertical surfaces tested are shown in figure 2. Figure 2 (a) gives the outline and dimensions of the original F4B-2 surfaces. In figure 2 (b) are shown the F4B-3 rudder, F4B-3 fin (dotted), and F4B-4 fin (full line). The F4B-3 rudder did not fit this airplane exactly, which caused the upper tip of the rudder to project above the top of the fin about 2 inches. With the exception of the small extra area at the top, this rudder was of the same shape and size as the standard F4B-4 rudder and will be referred to hereinafter as the "F4B-4 rudder" when discussed in connection with the F4B-4 fin. In figure 2 (c) the F4B-4 fin and rudder and three auxiliary fins are shown: two sizes of fin above the fuselage and one below. The particular shape of auxiliary fin no. 3 was chosen because space would not permit adding the large area desirable at the tail of the fuselage without altering the tail-wheel assembly and possibly involving other complications. The areas of the fin and rudder combinations were as follows:

Fin and rudder combination	Fin area	Rudder area	Total area
	sq. ft.	*sq. ft.*	*sq. ft.*
F4B-2 fin and rudder	1.92	7.68	9.60
F4B-3 fin and rudder	4.62	8.11	12.73
F4B-4 fin and rudder	6.35	8.11	14.46
F4B-4 fin and rudder and auxiliary fin no. 1	9.46	8.11	17.57
F4B-4 fin and rudder and auxiliary fin no. 2	11.32	8.11	19.43
F4B-4 fin and rudder and auxiliary fins nos. 2 and 3	15.79	8.11	23.90

The horizontal-surface combinations tested were the modified elevator, shown (dash line) on the plan view of the airplane in figure 1, and the raised stabilizer and elevator positions shown in figure 2 (d), in addition to the original condition shown in figures 1 and 2. The modified elevator had about the same areas as the original, but the plan form used was such that less unfavorable interference might have been expected. (See reference 3.) The two new stabilizer positions were 18.5 and 37 inches directly above the original position. In the intermediate position it was possible to use the same type of tailplane bracing as was employed in the original installation. With the surfaces in the high position, however, a special set of struts was necessary. These extra struts would not be required in an airplane originally designed for a stabilizer in the high position so that the loss in airplane performance associated

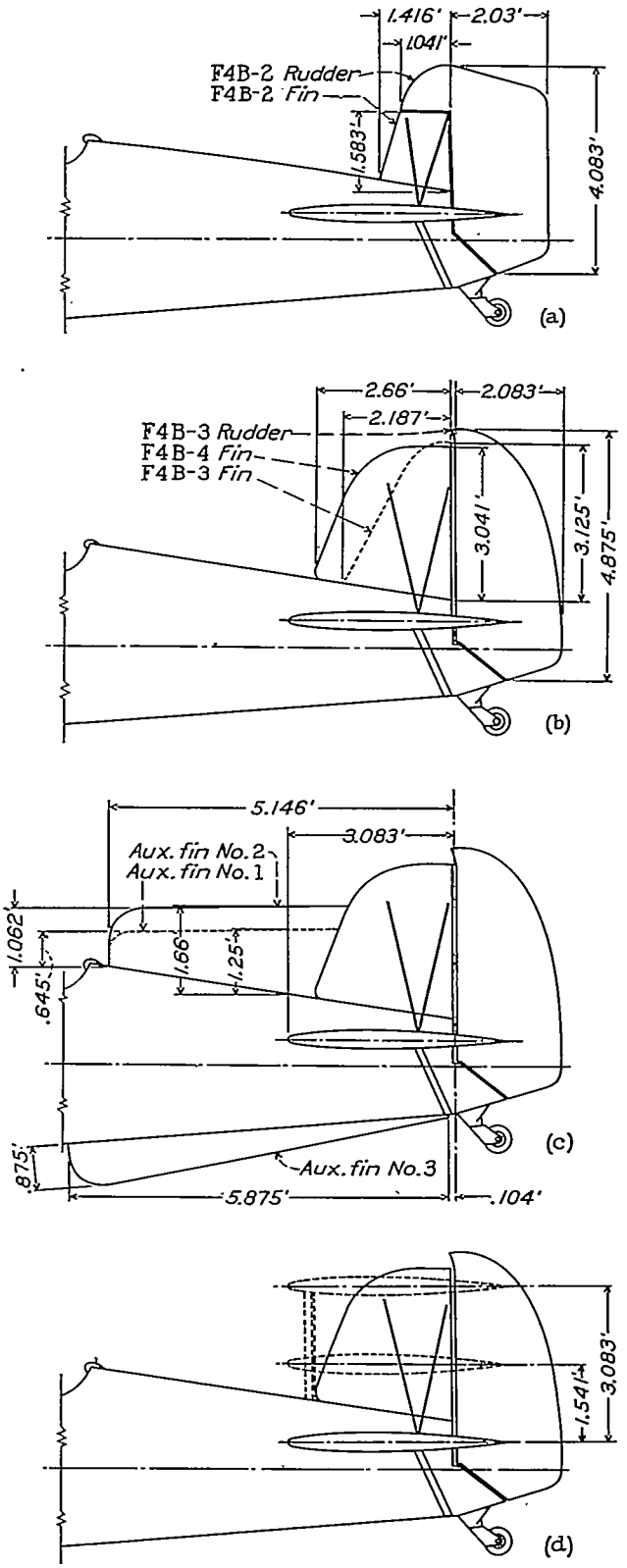

Areas

Rudder, F4B-2....7.68 square feet.
Rudder, F4B-3 (F4B-4)....8.11 square feet.
Fin, F4B-2.....2.00 square feet.
Fin, F4B-3.....4.62 square feet.
Fin, F4B-4.....6.35 square feet.
Fin, Aux. no. 1.....3.11 square feet.
Fin, Aux. no. 2.....4.97 square feet.
Fin, Aux. no. 3.....4.47 square feet.

FIGURE 2.—Fins, rudders, and horizontal surface positions tested with the F4B-2 airplane.

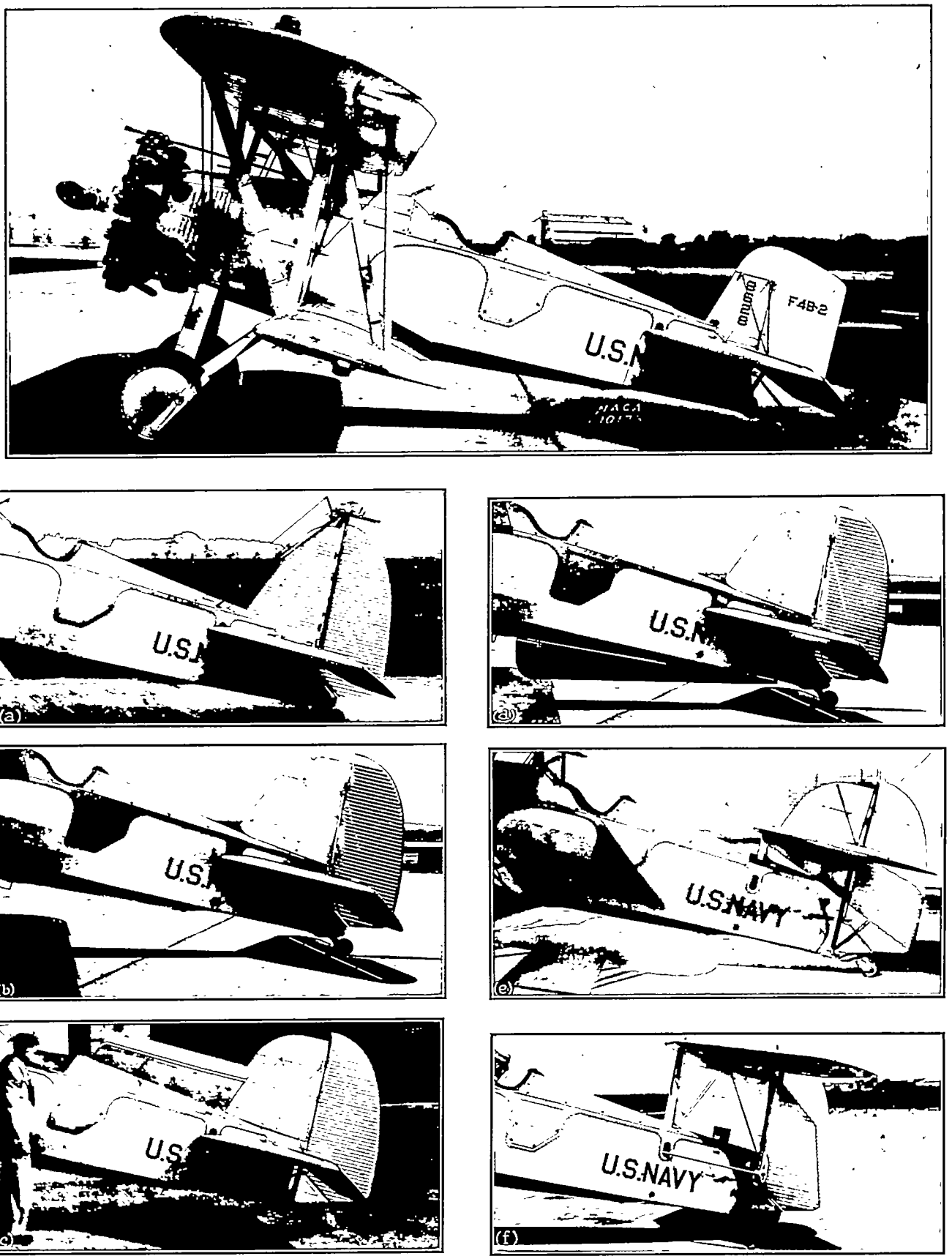

(a) F4B-3 fin and rudder.
(b) F4B-4 fin and rudder.
(c) F4B-4 fin and rudder with no. 2 auxiliary fin.
(d) F4B-4 fin and rudder with no. 3 auxiliary fin.
(e) Stabilizer and elevator in intermediate position.
(f) Stabilizer and elevator raised to top of fin and rudder.

FIGURE 3.—The F4B-2 airplane and the several tail-surface arrangements tested.

with these struts need not be considered a disadvantage inherent in this arrangement. The photographs (fig. 3) show the actual installations described in this and the preceding paragraph.

The load conditions tested, which were specified by the Bureau of Aeronautics, Navy Department, when the tests were requested, were as follows:

Airplane stripped	50 gallons of fuel carried. Equipment removed: arresting and flotation gear, oxygen equipment, pyrotechnics, first-aid kit, life jacket, auxiliary tank.
Airplane with normal load	50 gallons of fuel.
Normal load+radio+raft	50 gallons of fuel, life raft, and radio.
Carrier overload	110 gallons of fuel, auxiliary tank, and all equipment including life raft and radio.

A parachute was attached to the tail of the airplane to aid recovery in case a completely uncontrollable spin should develop during the tests. A special installation was developed after information had been received from the Flight Test Section, Naval Air Station, Anacostia, that a much simpler arrangement tested by them had not been entirely satisfactory. In the latter case the parachute was folded and carried by the pilot, the bridle line passing out of the cockpit to a point of attachment at the tail. When it was desired to use the parachute in a spin, the pilot threw it over his shoulder. This procedure was unsatisfactory because the parachute sometimes fouled the rudder balance horn and because in one case it fell on top of the stabilizer and would not blow off. This experience indicated the necessity of placing the parachute in a pack in such a position that it would be thrown clear of the empennage in a positive manner. The N. A. C. A. installation was therefore designed to mount the pack above the fin and rudder as shown in figure 4. The original form of the pack was suggested by Staff Sgt. C. F. Russell, then in charge of the Parachute Section at Langley Field. The operating gear was so arranged that the pilot could open the parachute by pushing a lever to a stop. Subsequently he could release the parachute from the airplane by moving the lever around the first stop and pushing it farther. The nominal diameter of the parachute was 8 feet, i. e., when the canopy was spread out on a flat surface it formed a disk 8 feet in diameter. It was provided with a 50-foot bridle line, which was long enough to permit the parachute to follow more smoothly both during the spin and when being towed behind the airplane in straight flight than was possible with a short line.

The parachute was carried for the preliminary tests and until the pilots had become familiar with the spinning of the airplane. It was not needed for emergency use but was opened once during a spin to observe its action. It opened immediately with an effect that was rather startling and unpleasant because it was so sudden. The airplane pitched forward rapidly until the fuselage was nearly vertical and the rate of rotation increased greatly. Without waiting for further developments, the pilot released the parachute and executed a rapid recovery from the spin. It was concluded that the marked increase in the rate of rotation followed partly from the decrease in moment of inertia about the axis of rotation as the latter axis was turned toward the longitudinal axis of the airplane and partly from the high equilibrium rate of free autorotation usually occurring at low angles of attack. This high rate of rotation probably would have diminished almost as rapidly as it developed had the pilot waited a few seconds before moving the controls or releasing the parachute because the ground observers and the pilot agreed that the airplane was in a low-angle-of-attack dive at the time the parachute

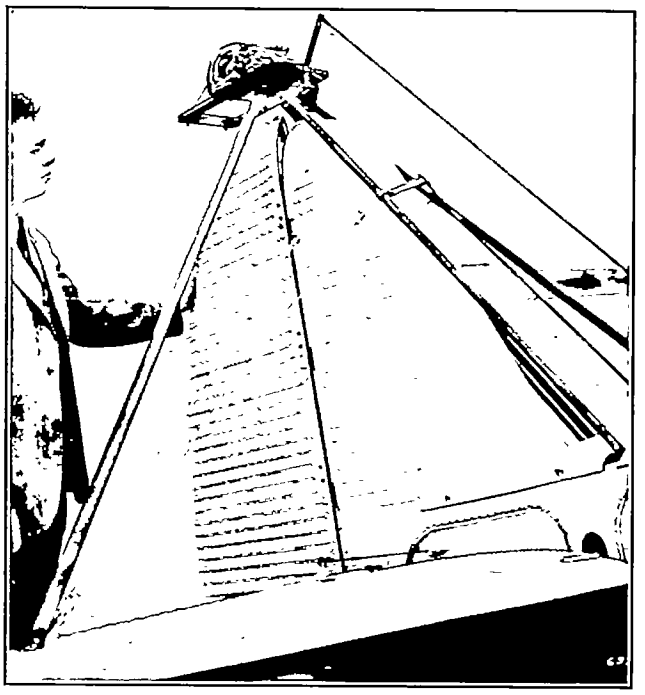

FIGURE 4.—Parachute pack, support, and operating gear mounted on tail of F4B-2 airplane.

was released, having passed through and beyond the angle of attack for maximum rate of autorotation. These observations indicate that the parachute would have been an effective emergency device in case the controls had proved ineffective.

The weight of the parachute and gear at the tail made it impossible to obtain the exact loading conditions specified. For this reason the loading conditions for the preliminary tests are designated "approximate stripped," "approximate normal load," etc. The differences between the exact loading condition and the approximate values were slight. The parachute and gear were removed in order to obtain the specified loading conditions exactly. All tests not

designated in table I as being made with an approximate loading are understood to have been made with the exact loading specified and with the parachute and gear removed.

The moments of inertia and the center-of-gravity position were measured by the standard N. A. C. A. compound and bifilar pendulum method before any changes were made to the airplane (reference 4). Thereafter, account of all changes to the airplane or its equipment was carefully kept and the moments of inertia and center-of-gravity position were computed for each change to the airplane or its load. Most of the service equipment called for in the specification of loading was actually used, but when parts of it were not available, equivalent ballast was substituted.

When the airplane was received, the fin was rigged with the normal offset of 2.2° to balance propeller torque. This setting was retained for the first part of the tests, but later all fins were set neutral in order to make the right and left spins as nearly alike as possible. Nearly all of the tests for which records are reported herein were made with fins set neutral. The wing incidence was measured and a noticeable variation along the span was found. This variation may be roughly summarized by the statement that the left semispan of the wing cellule had a washin of ⅓°. The stabilizer was set parallel to the thrust axis for all spins, including those in which the stabilizer was in the raised positions. With the exception of a few cases noted with the data, the propeller was stopped for all tests in which records were made. In order to comply as closely as possible with a request for tests with increased rudder throw, the rudder stops were run fully back so that a deflection of ±35° was obtained with the modified elevator, and one of ±34° with the standard, compared with ±29° for the deflection when the airplane was received.

The tests to determine turns required for recovery were made with a number of different combinations of control manipulation, all of which are indicated in table IV. The turns reported were counted from the heading at the time the pilot started to move the controls to the heading at which rotation stopped. Other tests, in which the instruments were operated, recorded the data for the steady spin or for the time history of a complete spin.

The instrument installation, which was essentially the same as that described in reference 5, consisted of three electrically driven gyroscopic angular-velocity recorders, a three-component air-damped accelerometer, a recording altimeter, a three-component control-position recorder, a sensitive indicating altimeter, and a stop watch. These instruments measured all the quantities necessary for a complete determination of the spinning motion. When making records of complete spins, the change of altitude was determined from the recording instrument; for steady-spin measurements a more accurate determination of vertical velocity was made with a sensitive indicating altimeter and a stop watch.

The results for the steady-spin measurements were computed in the manner indicated in reference 5, the accelerometer readings in each case being corrected to the center of gravity of the airplane.

PRECISION

In general, the precision of these tests was equivalent to that of reference 6. The first records were made without as careful checking of instrument operation as should have been employed because of the urgency of completing this part of the work. Nearly all of the records reported herein, however, were made with the necessary care so that the precision may be summarized as follows: angular velocity, ±3 percent for each component; acceleration, ±0.05 g; interval of altitude, ±3 percent; time, ±2 percent; weight, ±1 percent; moments of inertia, ±2.5 percent, ±1.3 percent, and ±0.8 for A, B, and C, respectively.

The precision stated in the previous paragraph applies to the records presented in the time histories (figs. 5 to 12) for the parts of the records that are steady or nearly so; for the parts of the records where rapid changes of angular velocity were taking place the angular velocity reported may be considerably in error owing to lag in the oil-damped angular-velocity recorders.

RESULTS AND DISCUSSION

The numerical results are presented in four tables as follows: Table I.—Properties of Airplane; Table II.—Instrument Data; Table III.—Computed Data; and Table IV.—Summary of Spin Recoveries. Part of the results are also given as time histories in figures 5 to 12.

All symbols are defined in the covers of the report except as follows: α_X is the angle of attack at the plane of symmetry referred to the airplane X axis and β is the angle of sideslip, the angle between the relative wind and the plane of symmetry. The sign of the angle of sideslip is the same as the sign of the component of velocity along the lateral axis.

The effect of the variations of fin and rudder size and of stabilizer position on the characteristics of this airplane in normal and acrobatic flight as reported by the pilots may be summarized as follows: The larger fins eliminated the directional instability that was very noticeable with the smallest fin and rudder; rudder forces were increased slightly but not objectionably; all acrobatic maneuvers could be readily executed with all the combinations of surfaces tried and it was considered that with the larger fins (except possibly the condition with the F4B-4 fin and rudder and auxiliary fins nos. 2 and 3) the control of the airplane during acrobatic maneuvers was more definite and satisfactory

than with the small fin and rudder; no noticeable difference was introduced in the flight characteristics by raising the horizontal surfaces except that for the highest position the maximum speed was diminished and there was a noticeable tendency of the airplane to lose speed during acrobatic maneuvers. This effect on the speed was to be expected as a result of the addition of several extra struts at the tail to support the control surfaces.

Before recommendations based on the results of the fin tests were made it was desired to determine as reliably as possible whether the airplane could be forced into spins not already observed during the tests. The results of attempts to force the machine into such unusual spins were reported to be entirely unsuccessful; i. e., if a spin was obtained in any of the various types of entry tried, it always returned to the normal spin as soon as the controls were returned to the normal position. For some of these trials, power was used. Aside from the effect on the spin, which was unimportant, it should be noted that the vibration produced by the two-bladed propeller was very uncomfortable to the pilot and had a destructive action on the airplane structure. All the drag and antidrag tie rods in the upper and lower wings were made slack inboard of the interplane struts and two of them were actually broken as the result of about 6 spins of 3 or 4 turns each with about half-throttle power.

The discussion of the results, in the following paragraphs, is based on the comparison of average values of spin parameters from the records obtained with each spin condition. These averages are presented in short tables at the beginning of the discussions of the effect of each of the several variables studied in the investigation. The second column of each of the tables gives the numbers of the tests averaged so that an idea of the relative weighting of the averages may be gained. It is possible also to find the complete description of the test conditions for each case by using the test numbers in referring to table I.

EFFECT OF LOADING

Loading	Tests averaged	Ω	α_x	β	V	Radius	$\frac{\Omega b}{2V}$
		rad./sec.	°	°	*ft./sec.*	*Feet*	
Approximately stripped [1]	15R: 1, 2, 3, 4; 16R: 1, 2, 3; 23R: 7, 8, 9, 10	2.57	44.5	−1.9	114.2	4.0	0.364
Normal [1]	26R: 3, 5, 7	2.94	43.8	−1.2	103.9	3.5	.424
Normal+radio+raft [1]	27R: 3, 4, 5, 6	2.87	45.2	−2.0	114.9	3.4	.376
Carrier overload [1]	37R: 1, 3, 5, 7; 36R: 3, 4	3.06	45.3	0	123.0	3.1	.373
Normal+radio+raft [2]	A58R: 2, 5, 6; 59R: 1, 3, 11	2.73	48.5	−.4	113.5	3.9	.362
Carrier overload [2]	73R: 1, 3, 5, 7, 11	2.84	46.4	−2.6	124.4	3.7	.342
Normal+radio+raft [3]	47R: 1, 2, 3, 4	3.16	52.4	−1.0	114.5	2.4	.414
Carrier overload [3]	49R: 1, 2, 3, 4, 5	3.21	50.4	−3.5	114.8	2.6	.420

[1] F4B-4 fin and rudder, standard elevator. [2] F4B-4 fin and rudder, modified elevator. [3] F4B-3 fin and rudder, standard elevator.

The effects of the changes in loading compared in these tests are the effects of changes both in wing loading and moments of inertia. (See table I for loading and moments of inertia.) These results are of interest because they show the effect of ordinary variations of service loading. Generally speaking, the changes in the steady spin associated with these loading changes were almost too small to be noticed. The changes were the expected increase in angular velocity and linear velocity with increase in loading. The angles of attack and sideslip did not change appreciably nor show a definite trend, the maximum variation between comparable conditions being 2.5° change in sideslip and less change in angle of attack.

No difference could be noticed in the number of turns required for recovery with the various loading conditions. The variations between different tests with the same loading conditions were usually as great as the variations between tests with different loading conditions. As the theory indicates (reference 7) that the condition with center of gravity far forward might have bad effects, one group of tests was made with the center of gravity at 27 percent of the mean aerodynamic chord. A comparison of the results of this group of tests with the comparable tests having the center of gravity at 31 and 34 percent of the mean aerodynamic chord showed no essential differences.

Steady spins with the larger fins were at somewhat lower angles of attack. The other parameters of the spin varied through small ranges in a manner that was not significant. This result is to be expected because all fins and rudders used, except for no. 3, were in such positions that the surfaces would have bad interference effects from the horizontal surfaces, and

EFFECT OF ENLARGED FIN AND RUDDER

Fin and rudder	Tests averaged	Ω	α_x	β	V	Radius	$\frac{\Omega b}{2V}$
		rad./sec.	°	°	*ft./sec.*	*Feet*	
F4B-2 fin and rudder	91R: 1; 93R: 1, 2, 3	2.78	52.8	−1.8	104.1	3.2	0.401
F4B-3 fin and rudder [1]	47R: 1, 2, 3, 4	3.16	52.4	−1.0	114.5	2.4	.414
F4B-4 fin and rudder	A89R: 1, 2, 3	2.78	50.1	−1.9	111.1	3.4	.376
F4B-4 fin and rudder, aux. fin no. 2	90R: 1, 2, 3	2.68	48.9	−.8	110.8	3.7	.363
F4B-4 fin and rudder, aux. fin no. 3 [2]	83R: 1, 3, 5, 7, 9	2.86	46.4	.3	114.5	3.7	.373

[1] Fin offset 2.2°, motor idling. [2] F4B-4 fin offset 1.55°, motor idling. Carrier overload in these tests, all others normal+radio+raft loading.

fin no. 3 was not far enough aft of the center of gravity. These variations in fin area were tried because it was desired to find a means of improving the spin characteristics of this type airplane without having to make major structural changes.

Comparison of the merits of the several modifications of fin and rudder shows progressive improvement in recoveries as the area of the vertical surfaces was increased, with the exception of the addition of the fin under the fuselage. This conclusion is based on the average of the turns required for each condition; some individual cases may be noted in which the improvement is not evident. In no case with the large fins did the airplane develop spins from which recovery seemed doubtful when the controls were set for normal recovery. Throughout the report "normal recovery" is understood to mean rudder completely reversed, stick neutral laterally and forward of neutral longitudinally, with both control displacements being applied smartly and simultaneously. The details of the dangerous spins occasionally encountered with the F4B–2 fin and rudder will be discussed in the paragraph on the effect of control displacement.

The tests made with the spinning balance (reference 1) in which the forces and moments were determined for spinning attitudes of a model of the F4B–2 airplane with the F4B–2 fin and rudder and subsequently with the F4B–4 fin and rudder are of interest in connection with these observations. The conclusions reached by comparing yawing moments indicated that there should be little difference between the steady spins for the two sets of surfaces. This result is in agreement with the corresponding flight results. Likewise, a conclusion from this reference that the F4B–4 fin and rudder should give more rapid recoveries is in agreement with the flight results previously stated.

EFFECT OF MODIFIED ELEVATORS

Elevator	Loading	Tests averaged	Ω	α_x	β	V	Radius	$\frac{\Omega b}{2V}$
			rad./sec.	°	°	*ft./sec.*	*Feet*	
F4B–2	Normal+radio+raft	27R: 3, 4, 5, 6	2.87	45.2	−2.0	114.9	3.4	0.376
Modified	do	A58R: 2, 5, 6: 59R: 1, 3, 11	2.73	48.5	−.4	113.5	3.9	.362
F4B–2	Carrier overload	36R: 3, 4; 37R: 1, 3, 5, 7	3.06	45.3	0	123.0	3.1	.373
Modified	do	73R: 1, 3, 5, 7, 11	2.84	46.4	−2.6	124.4	3.7	.342

The modified elevators (with F4B–4 fin and rudder) had very little effect on the steady spin. The rate of rotation was slightly less and the angle of attack slightly greater with the modified elevators than with the standard elevators. Sideslip varied somewhat, but no trend could be observed when the effects for the two loading conditions tested were considered.

The modified elevators made a noticeable improvement in ease of recovery for some methods of control manipulation, especially with stick forward. Improvement in recovery by this method would be expected because the interference produced by the modified elevator when in the down position would be less than the corresponding interference of the original form. A somewhat greater favorable effect was anticipated from the results of wind-tunnel tests made for the Bureau of Aeronautics, Navy Department, (reference 3) on a stationary model. These tests showed that at an angle of attack of 45° the rudder moments were 50 percent greater for the modified elevators than for the elevators in the original form. Earlier model tests made in England (reference 8) on a similar stabilizer and elevator indicated that slightly greater rudder moments against the spin were possible with modified than with standard form of elevator.

EFFECT OF STABILIZER POSITION

Position of stabilizer	Tests averaged	Ω	α_x	β	V	Radius	$\frac{\Omega b}{2V}$
		rad./sec.	°	°	*ft./sec.*	*Feet*	
Original (low)	A89R: 1, 2, 3	2.78	50.1	−1.9	111.1	3.4	0.376
Intermediate	112R: 1, 2, 3	2.84	47.6	−2.7	110.0	4.8	.387
High	A107R: 1, 2, 3	2.78	50.8	−4.4	108.3	3.1	.384

Raising the stabilizer and elevator produced no consistent variation or trend of the equilibrium values of the important spin parameters. This result is consistent with what would be expected because wind-tunnel tests have shown (references 2 and 9) that although raising the horizontal surfaces generally increases the damping yawing moment and diminishes the aerodynamic pitching moment, the change in these two moments at 50° angle of attack is negligible when the rudder is set with the spin.

The ease with which recoveries could be made was decidedly improved by raising the stabilizer and elevator, especially when the stabilizer and elevator were raised to the top of the fin and rudder. Even raising the stabilizer to the intermediate position gave better results than were obtained with the largest fins tried. Of all the conditions tested only the one with the stabilizer and elevator at the top of the fin gave satisfactory recoveries with the controls held neutral. In this case recovery was usually accomplished in 1½ turns and in no instance were more than 3 turns required. Such recoveries are quite satisfactory for an airplane having the wing loading of the subject airplane, especially since very fast recoveries can be made by setting the rudder against the spin.

Holding the stick forward caused an increase in angle of attack for the tests with stabilizer and elevator in their normal position and a decrease in angle of attack when they were in the high positions. The first result is in agreement with previous test experience and the results of a theoretical study of the effect of

EFFECT OF VARIATIONS OF CONTROL SETTING

Control setting	Tests averaged	Ω	α_x	β	V	Radius	$\frac{\Omega b}{2V}$
		rad./sec.	°	°	*ft./sec.*	*Feet*	
Test condition [1] 1							
Normal	A89R: 1, 2, 3	2.78	50.1	−1.9	111.1	3.4	0.376
Elevator down	86R: 1, 2, 3	3.60	53.7	−4.6	95.7	2.0	.563
Ailerons with spin	96R: 1, 2, 3; A96R: 2, 3	3.14	47.2	7.9	107.7	2.8	.539
Ailerons against spin	97R: 1; A97R: 1, 2, 3	3.01	50.1	−7.1	105.4	3.0	.429
Rudder against spin	87R: 2	3.67	37.1	17.1	122.6	3.2	.449
Test condition 2							
Normal	113L: 1, 2, 3	−2.94	50.3	−2.1	106.2	4.4	−.416
Elevator down	B114L: 1, 2, 3; E114L: 1, 2, 3	−3.59	47.3	2.1	103.8	3.7	−.520
Ailerons with spin	115L: 1, 2, 3	−3.04	50.6	−8.7	109.3	3.7	−.418
Ailerons against spin	116L: 1, 2, 3	−2.80	50.5	4.3	107.1	4.5	−.392
Test condition 3							
Normal	A103L: 1, 3	−2.80	51.6	1.4	103.9	3.0	−.404
Elevator down	A105L: 1, 2, 3	−3.41	49.5	0	99.4	2.2	−.515
Ailerons with spin	A104L: 2, 3	−2.74	53.1	−4.1	103.5	3.0	−.397
Ailerons against spin	106L: 1, 2, 3	−2.75	45.2	4.8	102.2	3.1	−.404
Test condition 4							
Normal	36R: 3, 4	3.07	46.2	−.4	123.4	3.1	.374
All neutral	36R: 3′	3.61	41.4	1.2	119.4	2.6	.454
Ailerons with spin	36R: 1	3.21	42.2	6.6	129.4	3.0	.372
Ailerons against spin	36R: 2	3.06	47.7	−2.1	124.3	2.9	.370
Test condition 5							
Normal	91R: 1; 93R: 1, 2, 3	2.78	52.8	−1.8	104.1	3.2	.401
All neutral	B95R: 1, 2, 3	3.32	43.9	−1.1	103.0	3.1	.462
Test condition 6							
Normal	49R: 1, 2, 3, 4, 5	3.21	50.4	−3.5	114.8	2.6	.420
Rudder against spin	49R: 5′	3.57	46.5	14.3	132.3	2.4	.405

[1] Test conditions:
1 F4B-4 fin and rudder, normal + radio + raft load, stabilizer low.
2 F4B-4 fin and rudder, normal + radio + raft load, stabilizer intermediate.
3 F4B-4 fin and rudder, normal + radio + raft load, stabilizer high.
4 F4B-4 fin and rudder, carrier overload, stabilizer low.
5 F4B-2 fin and rudder, normal + radio + raft load, stabilizer low.
6 F4B-3 fin and rudder, carrier overload, stabilizer low.

pitching moment alone. Spinning-balance tests on a model of this airplane with F4B-4 surfaces (reference 1) showed that at an angle of attack of 46°48′ deflecting the elevator from up to down increased the diving moment and had practically no effect on the yawing moment. As there was very little change in sideslip angle for these tests the theory in its simple form applies. (See reference 7.) For the tests with the surfaces in the high position it should be noted that there were components of aerodynamic moments acting that did not exist with the horizontal surfaces in the low position. From the tests of reference 2 it may be seen that probably the pitching moment produced by putting the elevator down was slightly less and an appreciable component of interference yawing moment opposing the spin was produced where the elevator was put down, although there are no direct measurements available to show the magnitudes of these effects. Such moment differences combined with the particular mass properties of the subject airplane seem to be consistent with the observed results.

Setting the controls neutral caused a decrease in angle of attack and increase in rate of rotation. In this case, data are available (reference 1) which show that diving moment and damping yawing moment are produced. The increase of rate of rotation results from the increased diving moment, and the decreased angle of attack follows as a consequence of the changes in both pitching and yawing moments.

Reversing the rudder caused a very high rate of rotation, low angle of attack, and large angle of inward sideslip. These results, provided that it was known that the spin could be made to continue with rudder reversed, could all have been predicted qualitatively from the charts in reference 7 showing the general relations of the spin parameters. As a matter of fact, it was very difficult with the F4B-4 fin and rudder to make the spin continue with rudder reversed and it was only after many attempts that the one spin from which these results were obtained was successfully made. Spins with rudder reversed were more easily obtained with the smaller F4B-2 fin and rudder and the same general results were observed in the steady spin as with the larger rudder. This relation between the ease of continuing the spin with rudder reversed for the two rudders tested in flight has been found to hold also when comparing the results of the model tests (reference 1). The results of the model tests indicated that it should be possible to continue the spin with rudder reversed as easily as with the rudder set with the spin in the case of the F4B-2 fin and rudder; whereas in the case of the F4B-4 fin and rudder the possibility of continuing the spin with rudder reversed would be less likely than in the former case.

The effect of deflecting the ailerons full with and against the spin varied in some respects with the position of the horizontal tail surfaces. In all the tests, deflecting ailerons with the spin caused inward sideslip and deflecting them against the spin caused outward sideslip as compared with the corresponding values for ailerons neutral. In the two groups of tests (two different loading conditions) with the stabilizer in its low position, the angle of attack was diminished by deflecting the ailerons with the spin and was held constant or slightly increased by deflecting the ailerons against the spin. With the stabilizer in the intermediate position, the angle of attack was constant for all three of the aileron settings and with the stabilizer in the high position, the change in angle of attack with aileron deflection was opposite to that

previously stated for the stabilizer in the low position. These effects are attributable to changes in moments from two sources; namely, the changes in rolling and yawing moment of the wings as a result of aileron deflection and the change in yawing moment of the tail as a result of sideslip changes. For example, when the ailerons are set with the spin the outer aileron is deflected downward producing rolling moment with the spin and yawing moment opposing the spin. The rolling moment with the spin causes inward sideslip, as consistently occurred in the tests. The inward sideslip would decrease the damping yawing moment produced by the tail but, in the tests with stabilizer in the low position, the damping yawing moment of the ailerons was evidently greater than the loss of damping yawing moment of the tail due to change in sideslip with the result that the angle of attack decreased. When the stabilizer was in the intermediate position, the increase of damping yawing moment from the ailerons was probably about equal to the loss at the tail with the result that the angle of attack did not change; whereas, with the stabilizer in the high position, the loss of damping yawing moment produced by the tail was probably greater than the increase of moment produced by the ailerons. The results reported in reference 2 indicate that this supposed difference of tail yawing moment due to sideslip for the three stabilizer positions is not only possible but probable because the tail yawing moment due to sideslip was found to increase continually as the stabilizer was moved to higher positions.

Recovery from a spin in which the elevator had been held down for some time or from a normal spin in which recovery was made by leading the control displacements with elevator down was found to require more turns than comparable recoveries started with elevator up or neutral. When the stabilizer and elevator were in the normal (low) position, displacing the ailerons against the spin at the moment the other controls were moved for recovery made recovery slower, and displacing ailerons with the spin slightly aided recovery. When the stabilizer and elevator were in the high position, the effect of aileron displacement during the recovery was opposite to the effect when the horizontal surfaces were in the low position; with the surfaces in the intermediate position there was little difference in the turns required for recovery when ailerons were deflected either way. These results seem to be directly related to the position of the stabilizer and elevator but, at present, there is not enough known about the magnitudes of the moments produced by the ailerons and by the different forms of tail to furnish an explanation of the experimental results. It is evident, however, that in a general way the effects of control displacement as observed for steady spins and for recoveries are similar.

The results of model tests (reference 1) seem to be in partial qualitative agreement with the flight results. With the small fin and rudder it appears that putting the elevator down and reversing the rudder would actually diminish the damping yawing moment; whereas with the F4B-4 fin and rudder this procedure would increase the damping yawing moment. The pitching-moment change in each case would be about the same. Had the elevator been held neutral and the rudder reversed, the model tests would indicate a substantial increase in damping yawing moment for each case, the stronger increase for the large fin and rudder. In the flight tests with the F4B-4 fin and rudder this method of recovery was almost the best, being only slightly inferior to reversing the rudder and letting the stick float freely. Since the elevator floated about half-way between neutral and up, the two best conditions measured on the spinning balance, it could be expected that had this position been tested with the model it might have given better results than did either the elevator-neutral or elevator-up positions.

Some features of the model results, on the other hand, were not borne out by the flight-test results. The model results indicated that recovery by the normal method would have been quite impossible for the small fin and rudder. They also indicated that recovery would be most likely with controls neutral. In the flight tests with the F4B-2 fin and rudder recovery was definite only by the normal method, that is, by reversing the rudder and putting the stick forward; whereas with controls neutral, recovery never was obtained for right spins and was slow for left spins. The discussion in reference 1 has already pointed out that there is a discrepancy between the model results and the flight results for the steady spin. Disregarding the actual errors in the spinning-balance measurements, it must be remembered that they were made under steady conditions. The forces that act during transition from one steady state to another may, it seems, have an important effect on recovery.

Attempts to produce unusual spins.—The previously mentioned attempts to produce unusual spins, in which entries were made from many maneuvers and an effort in each case was made to force the airplane into spins different from the normal type, produced no effects that could not be attributed to the unusual positions of the controls. The airplane always returned to the normal spin as soon as the controls were returned to their normal position. In its original condition the airplane could be made to spin in such a manner that the recovery was impossible without first returning to the normal spin; but when the fin area or fin efficiency was increased, this tendency rapidly diminished until the last condition (stabilizer in high position), in which recovery would follow soon after placing the controls in neutral. With reference to the use of engine power during the spin, it is not likely that pilots would care to apply as much power as that used in the special tests described in an earlier part of this report, because of the severe discomfort

produced by propeller vibration. There is little likelihood, therefore, that under service conditions dangerous spins would develop with any of the large fin and rudder combinations.

Control manipulation and dangerous spins.—For some time after the airplane was received the spins with the small fin and rudder (F4B-2) did not seem to be particularly dangerous, recovery always being possible in between 2 and 3 turns. This result was unexpected as several occasions had been reported in which this type of airplane had developed spins from which recovery was impossible. One of the tests, however, in which the pilot was asked to observe the effect of placing the controls in other than the usual position, produced a spin from which recovery was very slow. A few days later under somewhat similar circumstances one of the pilots (Mr. M. N. Gough) got into a spin which appears to have been very dangerous. His statement of the circumstances follows:

For this test the airplane had the original service tail surfaces and the fin was in a neutral position, the loading corresponding to that of normal+radio+raft. At an altitude of 10,000 feet the propeller was stopped and a spin to the right started. After approximately 800 feet the controls were placed in a neutral position and the spin was assumed to be steady after an additional 500 feet. At this altitude the instruments were started to record 1,000 feet of steady spin, as had been requested.

During this time it was noted that the force required to maintain the rudder in a neutral position was very small and, on completion of the record, it was decided to determine something further regarding the spin rather than to recover immediately. With the stick still in the neutral position, the rudder was fully reversed, very little force being required, and the spin continuing apparently unaffected. The force required to hold the stick in neutral was considerable and, when it was relieved, the stick came back against the seat with a very slight tendency for the ailerons to move with the spin.

The rudder was still reversed and no change in attitude could be detected. It was then a question as to whether the airplane would recover if all the controls were free. This method was tried and it was found that the rudder merely oscillated between a neutral position and against the spin. The stick remained in the aft position and no attitude change was detected. The spin was very smooth with the wings practically level.

It was then decided to recover from the spin, so the stick was placed in a forward position and the rudder fully reversed. There is some question as to the position of the stick. It was probably not much beyond neutral and surely not to the full forward position, which requires special exertion. At least it was well forward, but there was no change in the attitude of the spin after 4 turns.

The controls were then returned to the normal position for the right spin and the situation studied. It was quite clear that the rudder was of little or no value and that the stick forward had produced no results. There was just one thing left, and that was—ailerons with the spin. Without delay this was tried. The rudder was reversed, stick forward, and the ailerons placed with the spin. After about 3 turns a slight downward pitching of the nose indicated approaching recovery, which came after about 4 turns, being completed at an altitude of 4,200 feet.

The request called for three spins and, since this was the first one, two others were made with a confident feeling that recovery could be made by use of ailerons, as in the former case. This proved to be true, but 4 to 6 turns were required.

These and other similar reports show clearly two or three very important points with regard to dangerous spins. In the first place, it is possible that an airplane may have dangerous spin characteristics that might be entirely overlooked in a routine spin trial because setting the controls for a normal spin and holding them there might not develop the dangerous spin, as actually happened in the case of this airplane. Then spinning the airplane with controls set in some other position than fully with the spin, such as might be done thoughtlessly or by a pilot desiring to be cautious, might develop a spin from which recovery was possible only by returning the controls to the normal spin condition, waiting, and then applying them smartly and fully against the spin. For the subject airplane it seemed that moving the rudder to neutral or slightly against the spin had the greatest effect in producing the dangerous spin, but moving the stick forward or deflecting ailerons against the spin had a bad influence as well.

Some further observations might be noted. During these tests it was observed that as the fin area or the fin efficiency was increased the very unpleasant oscillations, which almost always occurred in the spins with the original tail surfaces, were diminished in intensity and frequency of occurrence until there was no tendency to oscillate steadily with the raised surfaces. This characteristic of the spin has some bearing on the danger involved since the unsteady rotation is usually very confusing to a pilot. It was further observed that as the spinning characteristics were improved by the changes made to the fin, rudder, and horizontal surfaces, the quantitative differences between successive similar tests varied through a narrower range, especially with regard to turns required for recovery. Hence, lack of agreement between results of repeated similar spin tests may be indicative of the inherent tendency of an airplane to produce dangerous spins.

TIME HISTORIES

Several time histories of spin parameters are presented for future study of the stability of spinning motion as well as for comparison with theoretical predictions regarding the effects of applied moments. All the spins here plotted are right spins. It should be noted that the force curves measure the inertia forces at the accelerometer location rather than at the center of gravity. In order to refer the forces to the center of gravity, the terms X_c, Y_c, and Z_c must be added to X, Y, and Z, respectively, where

$$X_c=\frac{1}{g}[zpr+ypq-x(r^2+q^2)]$$

$$Y_c=\frac{1}{g}[xpq+zqr-y(p^2+r^2)]$$

$$Z_c=\frac{1}{g}[yrq+xrp-z(q^2+p^2)]$$

x, y, and z being the coordinate distances of the three accelerometer elements from the center of gravity. These coordinate distances for the spins recorded in the time histories (figs. 5 to 12) are given in the following table:

Time history figure no.	x	y	z
	Feet	*Feet*	*Feet*
5	−1.021	−0.104	−0.681
6	−1.020	−.104	−.864
7	−1.048	−.104	−.622
8	−.987	−.104	−.858
9	−.987	−.104	−.858
10	−1.005	−.104	−.613
11	−1.057	−.104	−.622
12	−1.021	−.104	−.681

Several characteristics of the time-history curves may be correlated with the pilots' observations. For

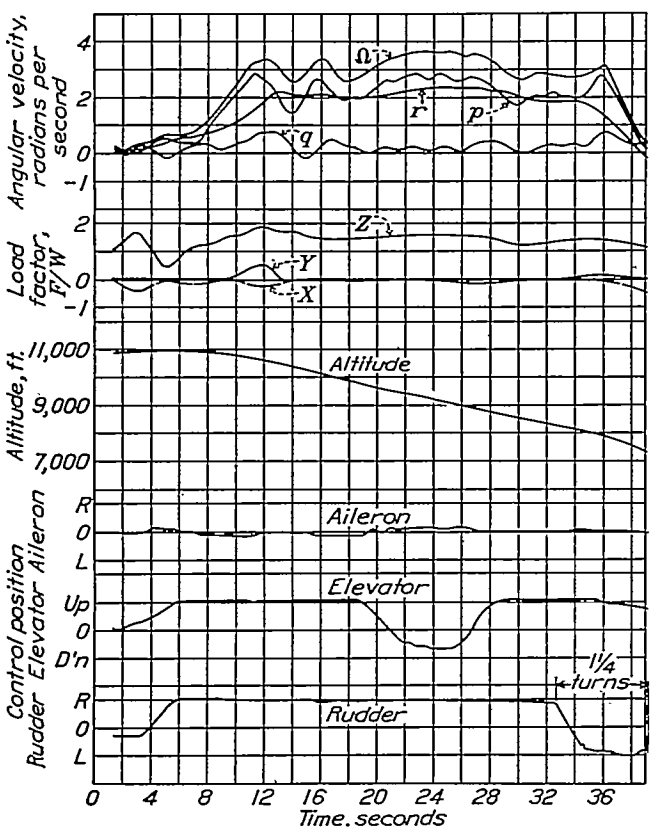

FIGURE 5.—Time history; stick forward, approximately stripped loading, F4B-3 fin and rudder.

example, it was found that entry into a right spin required more care and attention than entry into a left spin because in the former case there was a tendency for the airplane to break out of the spin before the rotation had been established. Inflections near the start of the angular-velocity records correspond to this break in the motion. The unsteadiness in forces and angular velocities continues to be noticeable to the pilot for about three turns. The accelerometer records show that the largest accelerations (particularly the transverse component) are experienced just before the motion becomes steady, and the pilots report being strongly held over in the corner of the cockpit during this time.

Recovery is always accompanied by the following phenomena. After the controls are displaced for recovery the resultant angular velocity at first increases somewhat while the yawing angular velocity remains constant. Then the yawing angular velocity drops and so, too, do the others. Recovery follows. The course of the angular-velocity curves during recovery suggests that the characteristic of the motion that most definitely indicates the beginning of recovery is the falling off of yawing angular velocity.

The flight records obtained in this investigation were examined to determine the degree of agreement between them and the predictions of the computations made in reference 10. In this reference, with the assumption of constant stability derivatives, the immediate effect of changes in some of the parameters, as by application of pure applied pitching, rolling, and yawing moment, was determined. Time histories similar to those presented herein were given.

The following tabulation shows the immediate effects of changes in some of the spin parameters as given in reference 10. The effects of increasing, in a positive sense, the value of the parameters is given, and the effects of decreasing the value of the parameters may be obtained by reversing the signs of the effects noted.

Parameter	When increased (made positive) results in
Ω, angular velocity	Positive sideslip, increased rate of rolling
α, angle of attack	Positive sideslip
β, angle of sideslip	Decreased angle of attack, decreased rate of rolling
L, rolling couple	Increased rate of rolling, positive sideslip
M, pitching couple	Increased rate of pitching, increased angle of attack or decreased rate of rotation, positive sideslip
N, yawing couple	Increased rate of yawing, negative sideslip, decreased rate of rolling

For the case of applied negative pitching moment the computations predict that p begins to rise, q falls somewhat, r rises slightly, and Ω increases to maintain angle of attack at about a constant value. Again, for the application of damping yawing moment, the prediction is that p tends to be maintained, q falls off slightly, and r falls off steadily accompanied by oscillations in q, α, and β. The effect of a damping rolling couple would be to reduce p, causing negative sideslip leading to increased angle of attack and being followed by oscillations.

The comparable time histories obtained with the F4B-2 airplane show fairly good agreement. In the case shown in figure 5, stick forward leads, as expected, to increases in p and Ω, a slight increase in r and a decrease in q. The effect of sudden rudder reversal (fig. 6) was to decrease r while p and q increased. The increase in q is contrary to the prediction in reference 10. Slow rudder reversal (fig. 7), not directly com-

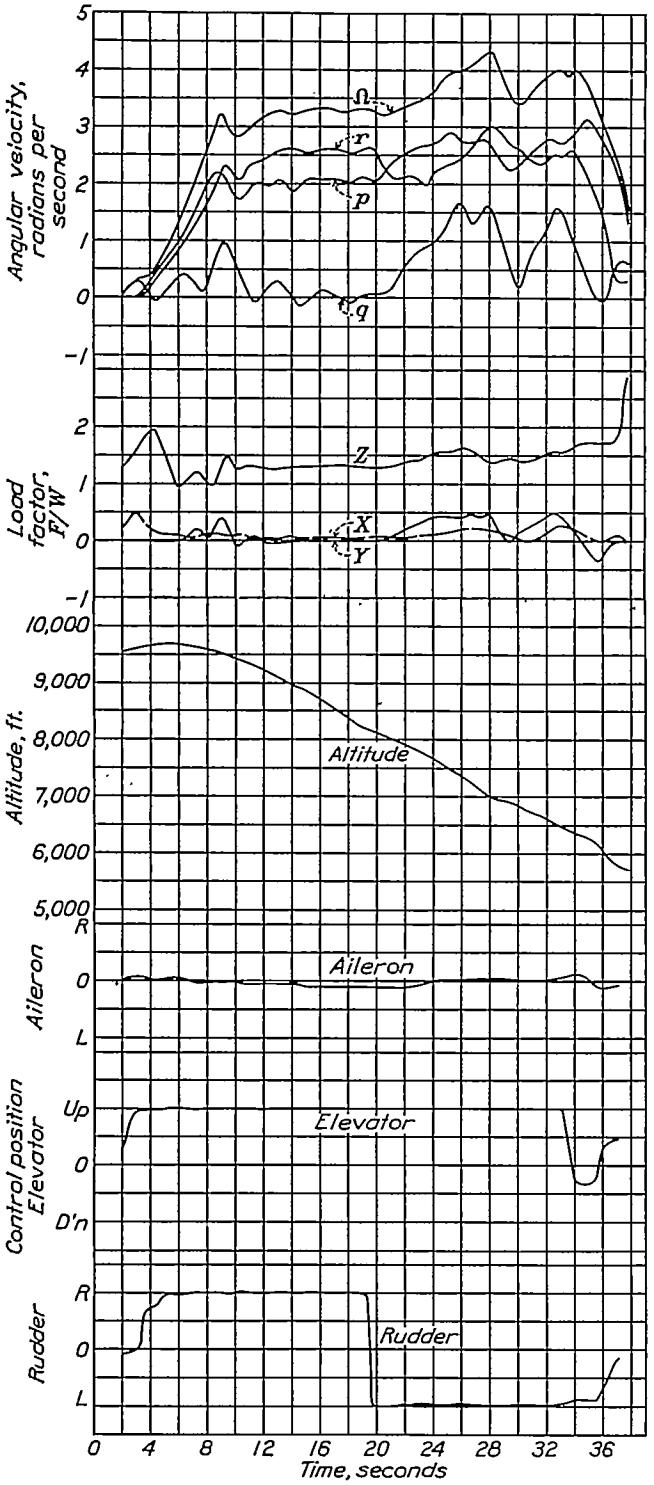

FIGURE 6.—Time history; rudder against spin, carrier overload, F4B-3 fin and rudder.

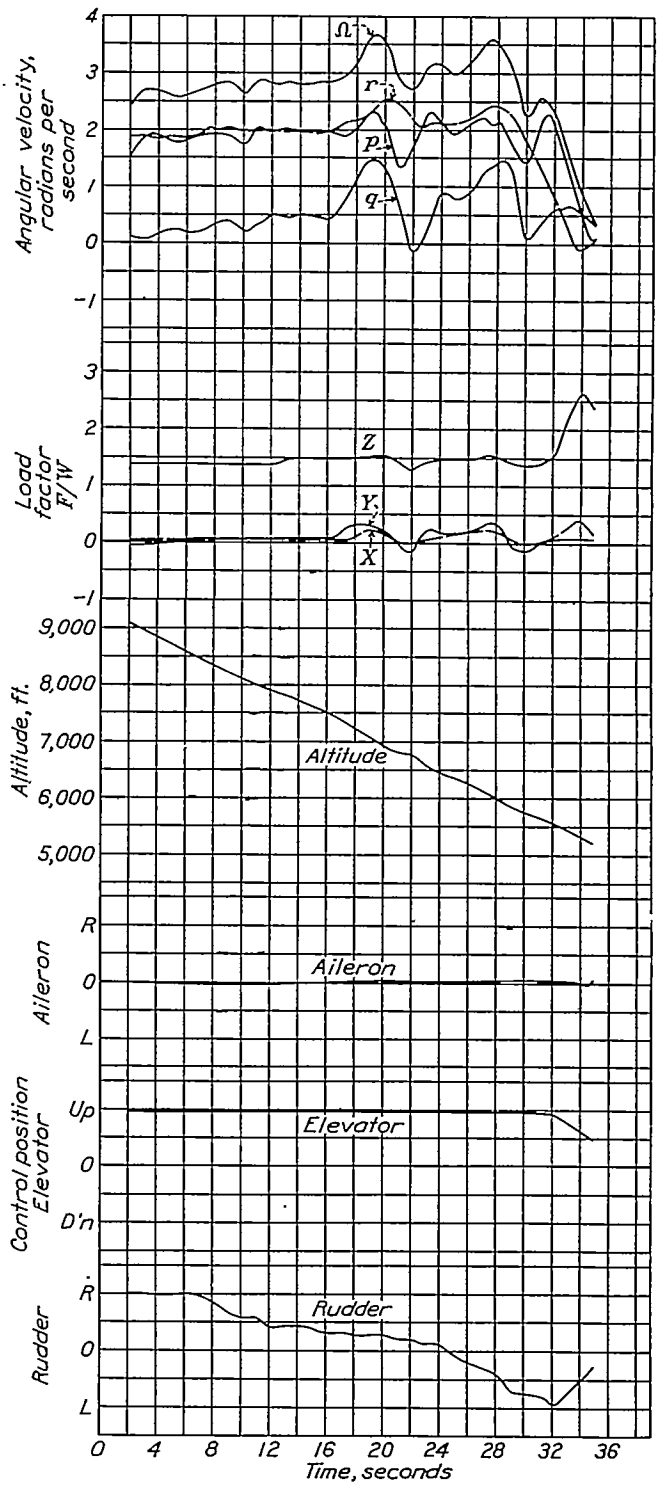

FIGURE 7.—Time history; slow rudder reversal, normal+radio+life raft load, modified elevator, F4B-4 fin and rudder.

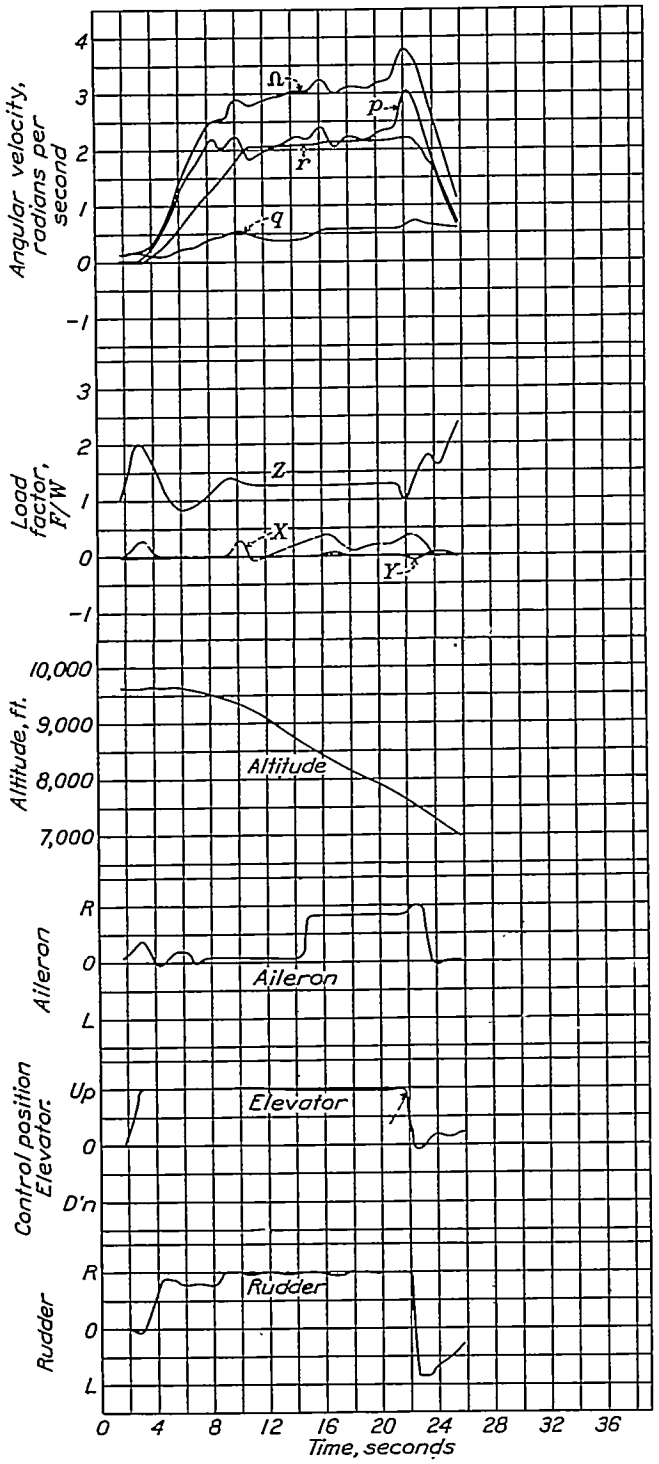

FIGURE 8.—Time history; ailerons with spin, carrier overload, F4B—4 fin and rubber.

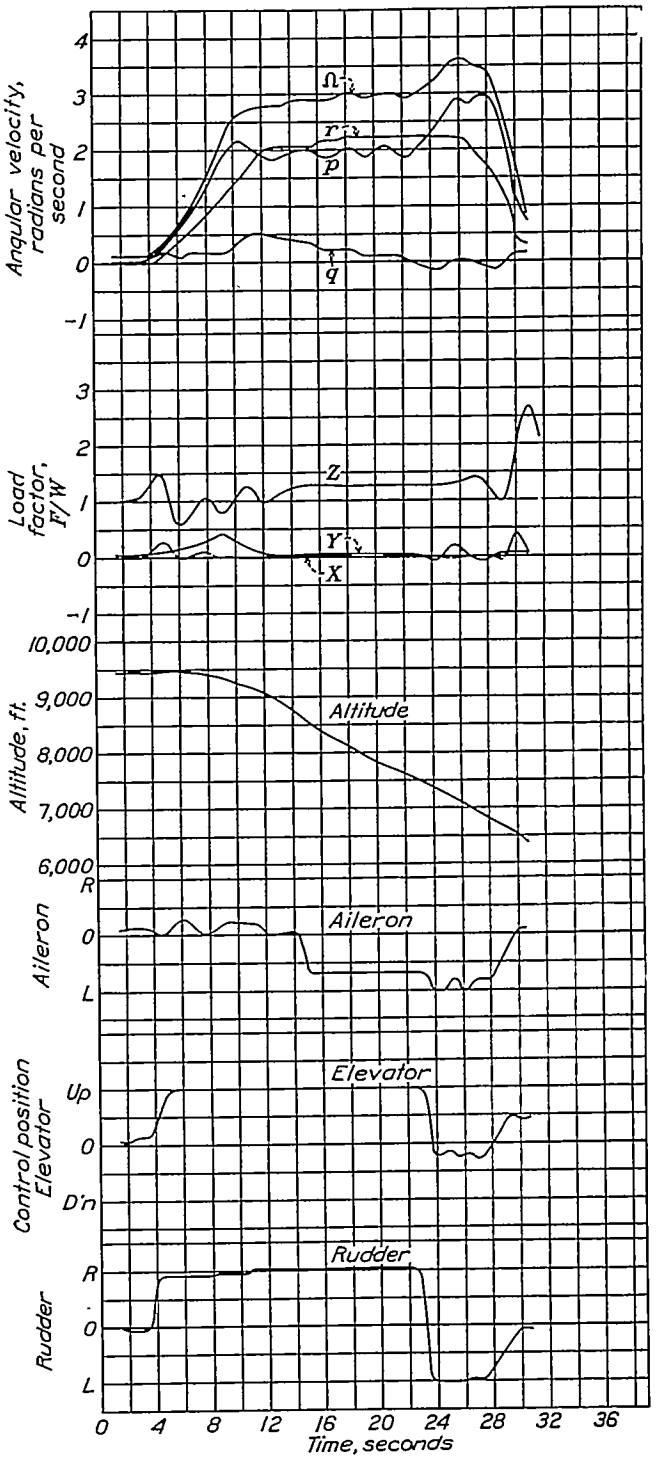

FIGURE 9.—Time history; ailerons against spin, carrier overload, F4B—4 fin and rudder.

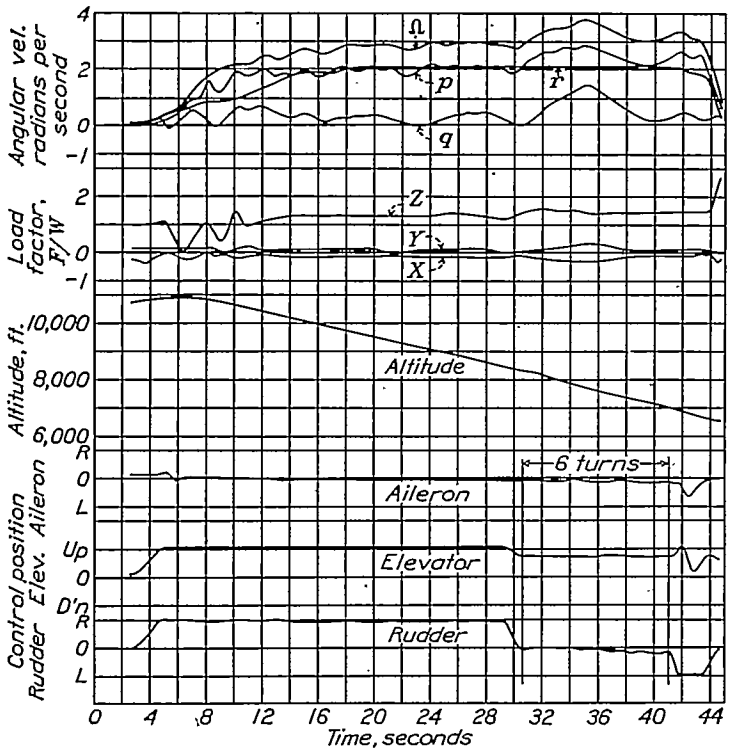

FIGURE 10.—Time history; ailerons and rudder neutral, elevator three-fourths up, approximately normal loading, F4B-4 fin and rudder.

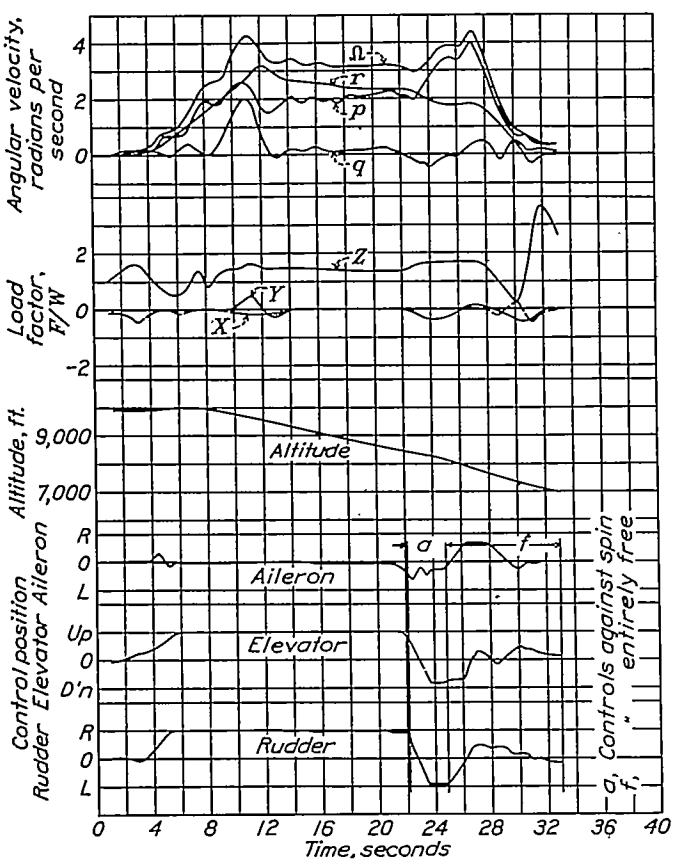

FIGURE 12.—Time history; controls against and released, approximately stripped loading, F4B-3 fin and rudder.

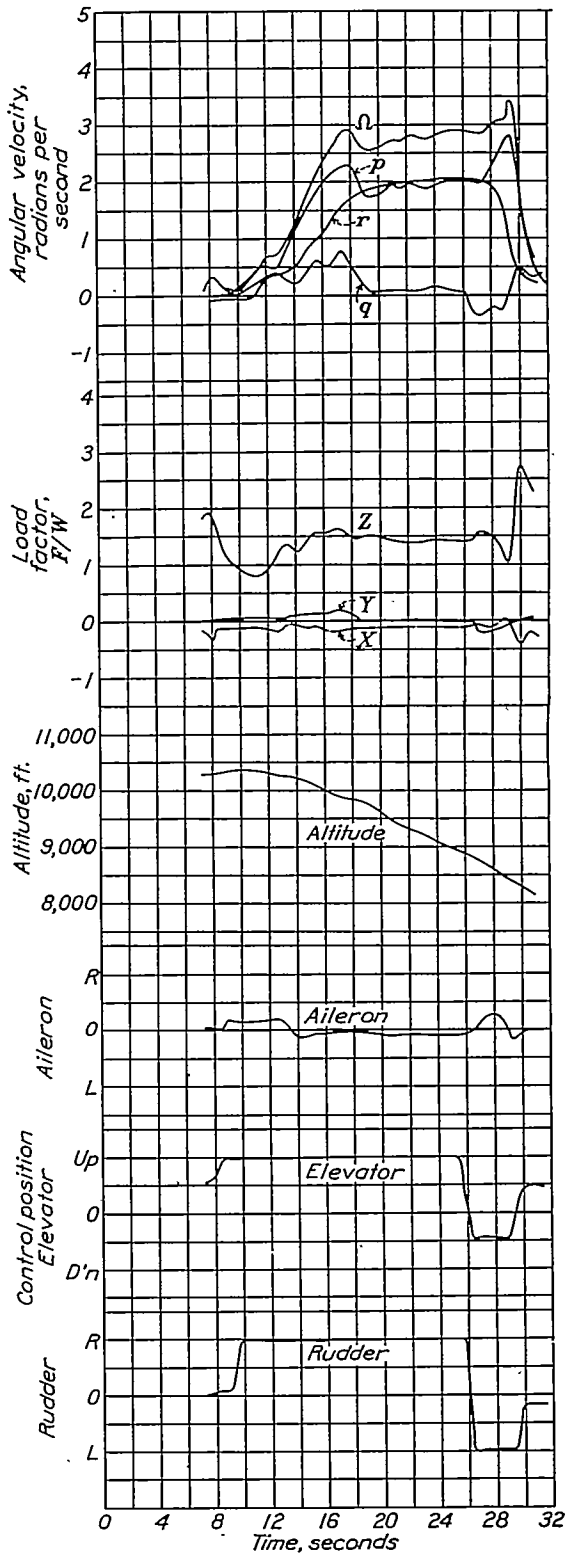

FIGURE 11.—Time history; normal recovery, normal+radio+life raft load, F4B-4 fin and rudder.

parable with the cases treated in the reference, led to sudden increase in p, q, r, and Ω. After the rudder was two-thirds of the way to neutral, oscillations followed, leading to recovery. Although there is no full-scale example of applied pure rolling couples, the effects of jointly applied rolling and yawing couples, one aiding and the other opposing the spin, are seen in figures 8 and 9. Ailerons set with the spin raised the outer wing tip; whereas ailerons set against the spin lowered it. In both cases, however, the yawing angular velocity r was increased. The large increase for the ailerons against the spin is due to the predominating effect of the yawing moment with the spin.

The time histories of the simultaneous effects of several control movements, because of the complex mutual interaction, cannot be analyzed simply in terms of the predictions of reference 10.

The spin shown in figure 10 was made with the rudder and ailerons neutral and the elevator three-quarters of the way from neutral to full up. This condition corresponds to the previous case of sudden rudder reversal shown in figure 6 except that the rudder is merely neutralized. As before, p, q, and Ω increase but r, instead of falling off, remains constant. This result is to be expected when the rudder is not fully reversed. A normal recovery (fig. 11) had the rudder reversed, stick half of full forward, and ailerons about neutral. In this case Ω and p increased while r and q decreased and q became negative, indicating that the outer wing tip was below the horizontal. From the theory, both of the individual effects would tend to increase p and decrease q. The rudder effect predominated in causing r to fall off steadily. Figure 12 shows the effect of setting the controls against the spin, suddenly followed by releasing them. In agreement with the previous case, q and r fell off, q became negative, while Ω and p increased. On being released all the controls swung back through the neutral position but the previously initiated movements of the airplane continued, except that q stopped falling and became positive. Recovery followed in this case. This seemingly is an example of the commonly reported occurrence in which recovery ensued after the pilot had prepared to abandon the airplane. A number of instances of recovery with controls free were observed during these tests but in no case did the pilot stand up, showing that release of the controls rather than change of moments of inertia or air-flow conditions, as has sometimes been supposed, was probably the reason for recovery when the pilot stood up.

CONCLUSIONS

1. Loading conditions had little effect on recoveries or steady spins.

2. Increasing the fin area progressively increased the ease of recovery and eliminated the oscillations in the steady spin.

3. A special elevator modified to give more clearance around the rudder produced only very slight improvement in recoveries and little change in the spin.

4. Raising the horizontal tail surfaces had the greatest beneficial effect in promoting recovery, permitting very rapid recoveries even with control surfaces neutral.

5. Control position had the usual effects on the steady spin except that with the raised stabilizer the effects of ailerons were opposite to the effects usually observed and to the effects observed on this airplane with the stabilizer in its original position. Application of separate controls produced immediate changes in the spin generally in agreement with step-by-step computations assuming constant stability derivatives.

6. Of the many control manipulations tried for recovery, reversed rudder and stick free seemed to be best where the larger fins were used, although with raised stabilizer the controls had to be operated with care to avoid too rapid recoveries.

7. Conclusions from spinning-balance tests regarding effect of fin size were in qualitative agreement with corresponding flight results.

8. The dangerous spins were developed with the small (F4B–2) fin and rudder by allowing the controls to assume a position near or toward neutral for some time before attempting recovery.

9. The enlarged fins and raised stabilizer arrangements had slight effects on the flying characteristics of the airplane in normal and acrobatic maneuvers, but none of the changes were considered undesirable and some were considered desirable.

Langley Memorial Aeronautical Laboratory,
National Advisory Committee for Aeronautics,
Langley Field, Va., *February 12, 1935.*

REFERENCES

1. Bamber, M. J., and Zimmerman, C. H.: The Aerodynamic Forces and Moments on a Spinning Model of the F4B–2 Airplane as Measured by the Spinning Balance. T. N. No. 517, N. A. C. A., 1935.
2. Bamber, M. J., and Zimmerman, C. H.: Effect of Stabilizer Location upon Pitching and Yawing Moments in Spins as Shown by Tests with the Spinning Balance. T. N. No. 474, N. A. C. A., 1933.
3. Peterson, R. H.: Additional Wind Tunnel Tests on F4B–1 Airplane. Report No. 484, Aero. Lab., C. & R. Dept., Washington Navy Yard, 1932.
4. Soulé, Hartley A., and Miller, Marvel P.: The Experimental Determination of the Moments of Inertia of Airplanes. T. R. No. 467, N. A. C. A., 1933.
5. Soulé, Hartley A., and Scudder, N. F.: A Method of Flight Measurement of Spins. T. R. No. 377, N. A. C. A., 1931.
6. Scudder, N. F.: A Flight Investigation of the Spinning of the NY–1 Airplane with Varied Mass Distribution and Other Modifications, and an Analysis Based on Wind-Tunnel Tests. T. R. No. 441, N. A. C. A., 1932.
7. Scudder, N. F.: A Study of Factors Affecting the Steady Spin of an Airplane. T. N. No. 468, N. A. C. A., 1933.

8. Irving, H. B., and Batson, A. S.: Spinning Experiments and Calculations on a Model of the Fairey IIIF Seaplane with Special Reference to the Effect of Floats, Tailplane Modifications, Differential and Floating Ailerons and "Interceptors." R. & M. No. 1356, British A. R. C., 1931.

9. Irving, H. B., Batson, A. S., and Stephens, A. V.: Spinning Experiments on a Single Seater Fighter with Deepened Body and Raised Tailplane. R. & M. No. 1421, British A. R. C., 1932.

10. Bryant, L. W., and Jones, I. M. W.: Notes on Recovery from a Spin. R. & M. No. 1426, British A. R. C., 1932.

TABLE I.—PROPERTIES OF AIRPLANE

Test no.[1]	Tail surfaces			Loading	Weight during spin	Momental ellipsoid constants			c. g. position in percent mean chord	Control setting
	Fin	Rudder	Elevator and stabilizer			A	B	C		
					Pounds	*Slug-feet²*	*Slug-feet²*	*Slug-feet²*		
15R: 1, 2, 3, 4	B-4	B-4	B-2	Approximate stripped	2,728	1,041	1,876	2,457	34.3	Normal.[2]
16R: 1, 2, 3, 4	do	do	do	do	2,728	1,041	1,876	2,457	34.3	Do.
23R: 7, 8, 9, 10	do	do	do	do.[3]	2,728	1,041	1,876	2,457	34.3	Do.
26R: 3, 5, 7	do	do	do	Normal	2,809	1,075	1,801	2,383	31.1	Do.
27R: 3, 4, 5, 6	do	do	do	Normal+radio+raft	2,915	1,078	1,876	2,455	33.2	Do.
36R: 1	do	do	do	Carrier overload	3,341	1,132	1,934	2,460	34.6	Ailerons with spin.
36R: 2	do	do	do	do	3,341	1,132	1,934	2,460	34.6	Ailerons against spin.
36R: 3′	do	do	do	do	3,341	1,132	1,934	2,460	34.6	Controls neutral.
36R: 3, 4	do	do	do	do	3,341	1,132	1,934	2,460	34.6	Normal.
37R: 1, 3, 5, 7	do	do	do	do	3,341	1,132	1,934	2,460	34.6	Do.
47R: 1, 2, 3, 4	B-3	B-3	do	Normal+radio+raft	2,908	1,077	1,841	2,421	32.5	Do.
49R: 1, 2, 3, 4	do	do	do	Carrier overload	3,334	1,131	1,899	2,426	34.0	Do.
49R: 4′	do	do	do	do	3,334	1,131	1,899	2,426	34.0	Rudder reversed.
49R: 5	do	do	do	do	3,334	1,131	1,899	2,426	34.0	Normal.
49R: 5′	do	do	do	do	3,334	1,131	1,899	2,426	34.0	Rudder reversed.
A58R: 2, 5, 6	B-4	B-4	Modified elevator[4]	Normal+radio+raft	2,913	1,078	1,866	2,445	33.2	Normal.
59R: 1, 3, 11	do	do	do	do	2,913	1,078	1,866	2,445	33.2	Do.
59R: 11′	do	do	do	do	2,913	1,078	1,866	2,445	33.2	Controls neutral.
71R: 3, 11	B-2	B-2[5]	B-2	Approximate carrier overload.	3,316	1,124	1,893	2,427	34.1	Normal.
71R: 11′	do	do.[5]	do	do	3,316	1,124	1,893	2,427	34.1	Controls neutral.
73R: 1, 3, 5, 7, 11	B-4	B-4[6]	Modified elevator	Carrier overload	3,339	1,132	1,924	2,450	34.4	Normal.
73R: 11′	do	do.[6]	do	do	3,339	1,132	1,924	2,450	34.4	Controls neutral.
83R: 1, 3, 5, 7, 9	B-4+fin no. 3	do	B-2	do	3,350	1,133	1,950	2,475	35.0	Normal.
83R: 9′	do	do	do	do	3,350	1,133	1,950	2,475	35.0	Controls neutral.
86R: 1, 2, 3	B-4 neutral	do	do	Normal+radio+raft	2,915	1,078	1,876	2,455	33.2	Stick ¾ full forward.
B85R: 1, 2, 3	do	do	do	do	2,915	1,078	1,876	2,455	33.2	Normal.
87R: 2	do	do	do	do	2,915	1,078	1,876	2,455	33.2	Rudder reversed.
89R: 1, 2, 3	do	do	do	do	2,915	1,078	1,876	2,455	33.2	Normal.
A89R: 1, 2, 3	do	do	do	do	2,915	1,078	1,876	2,455	33.2	Do.
90R: 1, 2, 3	B-4 neut.+fin no. 2.	do	do	do	2,930	1,080	1,912	2,489	34.1	Do.
91R: 1	B-2	B-2	do	do	2,905	1,077	1,827	2,407	32.3	Do.
93R: 1, 2, 3	do	do	do	do	2,905	1,077	1,827	2,407	32.3	Do.
95R: 1	B-2 neutral	do	do	do	2,905	1,077	1,827	2,407	32.3	Do.
B95R: 1, 2, 3	do	do	do	do	2,905	1,077	1,827	2,407	32.3	Controls neutral.
95R: 1′	do	do	do	do	2,905	1,077	1,827	2,407	32.3	Do.
96R: 1, 2, 3	B-4 neutral	B-4	do	do	2,915	1,078	1,876	2,455	33.2	Ailerons with spin.
97R: 1	do	do	do	do	2,915	1,078	1,876	2,455	33.2	Ailerons ⅔ full against.
A97R: 1, 2, 3	do	do	do	do	2,915	1,078	1,876	2,455	33.2	Do.
A96R: 2, 3	do	do	do	do	2,915	1,078	1,876	2,455	33.2	Ailerons with spin.
A104L: 1	do	do	B-2, high position	do	2,917	1,098	1,896	2,455	33.4	Ailerons slightly right.
A104L: 2, 3	do	do	do	do	2,917	1,098	1,896	2,455	33.4	Ailerons ⅔ full left.
A103L: 1, 3	do	do	do	do	2,917	1,098	1,896	2,455	33.4	Normal.
A105L: 1, 2, 3	do	do	do	do	2,917	1,098	1,896	2,455	33.4	Stick forward.
106L: 1, 2, 3	do	do	do	do	2,917	1,098	1,896	2,455	33.4	Ailerons against spin.
A107R: 1, 2, 3	do	do	do	do	2,917	1,098	1,896	2,455	33.4	Normal.
112R: 1, 2, 3	do	do	B-2, intermediate position.	do	2,915	1,078	1,876	2,455	33.2	Do.
113L: 1, 2, 3	do	do	do	do	2,915	1,078	1,876	2,455	33.2	Do.
B114L: 1, 2, 3	do	do	do	do	2,915	1,078	1,876	2,455	33.2	Stick forward.
E114L: 1, 2, 3	do	do	do	do	2,915	1,078	1,876	2,455	33.2	Do.
116L: 1, 2, 3	do	do	do	do	2,915	1,078	1,876	2,455	33.2	Ailerons against spin.
115L: 1, 2, 3	do	do	do	do	2,915	1,078	1,876	2,455	33.2	Ailerons with spin.

[1] For all flights through 89R3 the motor was idling at 525 r. p. m.; for all later flights the propeller was stopped.
[2] Normal control setting for steady spin was: Stick back, ailerons neutral, rudder with spin. All exceptions to normal are stated.
[3] Parachute was removed for this flight but equivalent ballast used.
[4] Modified elevator had same area but plan form was altered to give less rudder shielding in spin.
[5] Maximum rudder throw was increased to 34° by moving the rudder stops. Normal maximum throw was 29°
[6] Rudder throw was increased to 35° using modified elevators and moving rudder stops.

TABLE II.—INSTRUMENT DATA

Test no.	Angular velocity readings			Accelerometer readings corrected to c. g.			Vertical velocity
	p	q	r	$\frac{X}{mg}$	$\frac{Y}{mg}$	$\frac{Z}{mg}$	
	rad./sec.	rad./sec.	rad./sec.				ft./sec.
15R1 [1]	1.90	0.164	2.09	0.0512	0.0091	1.27	115
15R2	1.90	.109	2.09	.0099	.0147	1.33	117
15R3	1.95	.164	2.06	−.0039	.0092	1.33	116
15R4	1.90	.164	2.06	−.0016	.0088	1.33	124
16R1	2.02	.196	2.00	.0385	.0584	1.34	113
16R2	2.02	.207	2.03	.0410	.1101	1.39	119
16R3	1.94	.164	2.06	.0471	.0091	1.33	117
23R7	1.96	.171	1.83	.0274	.0063	1.34	107
23R8	1.99	.228	1.73	.0203	.0003	1.40	107
23R9	1.99	.205	1.70	.0182	.0023	1.35	107
23R10	1.91	.182	1.70	.0211	.0040	1.40	108
26R3	2.09	.236	2.03	.0085	.0004	1.34	100
26R5	2.10	.217	2.06	.0623	−.0491	1.31	105
26R7	2.07	.239	2.06	.0128	.0002	1.36	105
27R3	1.99	.114	2.09	.0625	−.0632	1.31	112
27R4	2.04	.182	2.09	.0607	−.0701	1.34	119
27R5	1.97	.114	2.06	.0602	−.0897	1.32	115
27R6	1.99	.171	2.03	.0569	−.0958	1.29	112
36R1	2.31	.605	2.14	.0150	.0588	1.32	129
36R2	2.04	.110	2.29	.0358	−.0875	1.32	124
36R3	2.04	.251	2.23	.0310	−.0558	1.27	125
36R3′	2.69	.209	2.40	−.0178	−.0434	1.39	119
36R4	2.15	.165	2.24	−.0005	−.0416	1.35	121
37R1	2.20	.333	2.22	.0121	−.0107	1.31	127
37R3	2.17	.268	2.27	.0172	−.0022	1.30	125
37R5	2.18	.171	2.15	.0329	.0091	1.31	120
37R7	2.12	.268	2.07	.0038	.0485	1.31	120
47R1	1.92	.160	2.45	.0599	.0133	1.26	113
47R2	1.94	.160	2.51	.0411	.0142	1.26	113
47R3	1.89	.130	2.66	.0382	.0194	1.25	116
47R4	1.89	.160	2.42	.0060	.0127	1.31	115
49R1	2.09	.040	2.50	.0580	.0291	1.30	111
49R2	2.12	.020	2.47	.0529	.1100	1.33	118
49R3	2.08	.060	2.49	.0586	−.0003	1.30	120
49R4	2.00	.020	2.48	.0345	.0301	1.27	107
49R4′	2.77	1.294	2.36	.0173	.0436	1.48	125
49R5	1.98	.050	2.39	.0748	.0245	1.28	116
49R5′	2.29	1.095	2.51	.0702	.0320	1.43	132
A58R2	1.91	.175	2.27	.0067	.0100	1.31	116
A58R5	1.76	.340	1.94	−.0191	.0681	1.33	116
A58R6	1.83	.223	1.91	−.0262	.0011	1.33	116
59R1	1.81	.213	2.04	−.0391	.0552	1.32	110
59R3	1.81	.252	2.10	−.0328	.1040	1.32	108
59R11	1.60	.213	1.98	.0150	.0017	1.33	109
59R11′	2.25	.825	2.43	−.0524	.0925	1.58	114
71R3	1.87	−.019	2.10	−.0495	−.0242	1.30	127
71R11	1.68	.019	1.86	−.0314	.0183	1.31	124
71R11′	2.33	.543	2.20	−.0912	.1427	1.49	120
73R1	2.01	.155	2.30	−.0368	.0110	1.29	126
73R3	2.06	.136	2.09	−.0577	.0116	1.31	126
73R5	2.04	.155	2.00	−.0010	.0344	1.37	129
73R7	1.85	−.019	2.15	.0051	.0283	1.32	122
73R11	1.78	.136	1.75	−.0139	.0063	1.31	117
73R11′	2.29	.078	2.06	−.0209	.0209	1.54	125
83R1	2.06	.385	2.18	.0255	.0618	1.33	114
83R3	1.99	.289	2.08	−.0304	.0987	1.31	114
83R5	1.95	.193	2.18	−.0216	.0737	1.33	114
83R7	1.91	.310	2.02	−.0564	.0956	1.39	114
83R9	1.91	.214	1.89	−.0402	.1055	1.37	114
83R9′	2.41	.086	2.05	−.0567	.0477	1.55	112
86R1	2.19	−.033	2.95	.0129	−.0129	1.31	95
86R2	2.11	0	2.93	.0123	−.0037	1.33	95
86R3	2.07	−.044	2.82	.0247	−.0218	1.39	96
B85R1	2.03	0.028	2.10	−0.0435	−0.0202	1.30	106
B85R2	1.99	.017	2.15	−.0564	−.0165	1.38	106
B85R3	1.87	.166	2.10	−.0649	−.0025	1.35	101
87R2	2.69	1.404	2.07	−.0950	.2387	1.60	122
89R1	1.92	.071	2.30	−.0005	−.0219	1.32	110
89R2	1.83	.068	2.32	.0045	−.0244	1.32	111
89R3	1.83	.073	2.27	.0084	−.0047	1.34	111
A89R1	1.83	.091	2.15	.0256	−.0090	1.32	111
A89R2	1.68	.014	2.09	.0248	−.0224	1.29	110
A89R3	1.78	.342	2.19	.0264	−.0603	1.37	111
90R1	1.74	.189	2.08	.0568	.0068	1.27	111
90R2	1.78	.216	2.02	.0255	.0200	1.31	109
90R3	1.73	.200	1.97	.0204	.0349	1.31	111
91R1	1.76	.239	2.47	−.0064	.0113	1.22	100
93R1	1.62	−.004	2.22	.0196	−.0586	1.25	101
93R2	1.71	.265	2.16	−.0157	.0123	1.31	108
93R3	1.56	.105	2.04	−.0303	−.0076	1.26	103
95R1	2.05	.181	2.64	.0079	.0213	1.29	120
95R1′	2.59	.014	2.59	−.0019	−.0352	1.42	134
B95R1	2.50	.203	2.35	−.0373	.0162	1.48	101
B95R2	2.25	.035	2.35	−.0288	−.0079	1.42	108
B95R3	2.33	.529	2.21	−.0271	.0064	1.48	114
96R1	2.30	.613	2.22	−.0118	.1077	1.29	106
96R2	2.00	.768	2.26	−.0196	.0785	1.28	104
96R3	1.98	.709	2.31	−.0273	.0955	1.27	109
97R1	2.01	−.214	2.26	.0145	−.0469	1.29	109
A97R1	1.96	−.073	2.41	−.0247	−.0184	1.24	105
A97R2	1.89	−.085	2.38	−.0189	.0005	1.25	103
A97R3	1.88	−.094	2.17	−.0206	−.0400	1.32	103
A96R2	2.02	.671	2.28	−.0110	.0795	1.23	109
A96R3	2.03	.667	2.28	−.0076	.1128	1.25	109
A104L1	−1.58	.227	−2.12	.0069	.0472	1.19	101
A104L2	−1.59	.492	−2.27	.0244	.0087	1.18	103
A104L3	−1.56	.367	−2.13	.0215	.0403	1.22	103
A103L1	−1.77	.131	−2.17	.0365	.0504	1.21	104
A103L3	−1.65	.176	−2.24	.0425	.0355	1.23	103
A105L1	−2.23	.255	−2.64	.0398	.0339	1.10	95
A105L2	−2.18	.208	−2.60	.0411	.0558	1.24	99
A105L3	−2.13	.273	−2.58	.0244	.0307	1.31	103
106L1	−1.79	.038	−2.21	.0428	.0661	1.22	100
106L2	−1.71	−.028	−2.09	.0404	.0447	1.25	101
106L3	−1.64	−.026	−2.17	.0346	.0532	1.22	98
A107R1	1.76	.023	2.17	.0355	−.0458	1.22	110
A107R2	1.75	.015	2.12	.0385	−.0450	1.23	109
A107R3	1.71	.010	2.20	.0296	−.0491	1.20	105
112R1	1.95	.243	2.19	−.2656	−.0364	1.51	108
112R2	1.86	.174	2.04	−.2359	−.0479	1.50	109
112R3	1.84	.219	2.10	−.2505	−.0373	1.49	111
113L1	−1.84	.409	−2.24	−.2767	.0119	1.53	105
113L2	−1.77	.454	−2.28	−.2808	.0251	1.49	105
113L3	−1.83	.519	−2.27	−.2935	.0149	1.50	105
B114L1	−2.52	.219	−2.59	−.3888	.0379	1.77	103
B114L2	−2.32	.341	−2.63	−.4064	.0348	1.75	103
B114L3	−2.34	.279	−2.55	−.3803	.0287	1.76	100
E114L1	−2.45	.342	−2.74	−.4210	.0334	1.72	97
E114L2	−2.38	.301	−2.74	−.4175	.0549	1.67	100
E114L3	−2.38	.401	−2.67	−.4192	.0314	1.73	102
116L1	−1.82	.133	−2.18	−.2185	.0476	1.47	109
116L2	−1.73	.104	−2.17	−.2234	.0421	1.45	105
116L3	−1.71	.116	−2.16	−.2237	.0409	1.43	105
115L1	−1.88	.766	−2.38	−.2934	.0061	1.52	107
115L2	−1.78	.678	−2.34	−.2367	.0336	1.47	109
115L3	−1.74	.892	−2.26	−.2344	.0356	1.49	110

[1] R, right-hand spin; L, left-hand spin.

TABLE III.—COMPUTED DATA

Test no.	Ω	R	Z''	α_x	β	γ	V	Radius	$\frac{\Omega b}{2V}$	C_l	C_m	C_n
	rad./sec.	*(mg)*	*(mg)*	°	°	°	*ft./sec.*	*Feet*				
15R1	2.83	1.27	0.98	47.5	−1.31	−85.4	115.4	3.3	0.368	0.00230	−0.0591	0.00252
15R2	2.83	1.33	.98	47.6	−2.74	−85.1	117.4	3.6	.362	.00148	−.0571	.00162
15R3	2.85	1.33	.96	46.3	−1.81	−84.9	116.4	3.6	.367	.00223	−.0589	.00256
15R4	2.81	1.33	.98	47.1	−1.42	−85.2	124.4	3.7	.339	.00195	−.0501	.00216
16R1	2.85	1.34	.97	44.7	−1.31	−84.7	113.5	3.6	.377	.00274	−.0626	.00337
16R2	2.88	1.39	1.02	45.3	−.97	−84.9	119.5	3.7	.361	.00264	−.0573	.00320
16R3	2.84	1.33	1.00	46.5	−1.54	−85.1	117.4	3.5	.362	.00219	−.0574	.00249
23R7	2.68	1.34	.94	42.6	−2.52	−83.8	107.6	4.3	.374	.00242	−.0611	.00314
23R8	2.65	1.40	.93	40.5	−1.83	−83.2	107.8	4.8	.369	.00305	−.0590	.00425
23R9	2.63	1.35	.89	40.1	−2.15	−83.4	107.7	4.7	.366	.00270	−.0594	.00383
23R10	2.57	1.40	.95	41.3	−2.76	−83.1	108.8	5.1	.354	.00235	−.0543	.00317
26R3	2.93	1.34	.93	43.5	−1.37	−84.0	100.6	3.6	.437	.00424	−.0763	.00455
26R5	2.95	1.31	.95	43.7	−1.08	−84.7	105.5	3.3	.419	.00359	−.0710	.00381
26R7	2.93	1.36	.97	44.3	−1.02	−84.3	105.5	3.6	.416	.00397	−.0698	.00413
27R3	2.88	1.32	.99	45.8	−2.63	−85.1	112.4	3.4	.385	.00168	−.0632	.00185
27R4	2.92	1.34	1.00	45.0	−1.14	−85.2	119.4	3.4	.367	.00238	−.0575	.00270
27R5	2.85	1.32	.99	45.5	−2.57	−85.1	115.4	3.5	.371	.00157	−.0585	.00174
27R6	2.84	1.29	.95	44.7	−1.54	−84.9	112.4	3.5	.379	.00245	−.0614	.00278
36R1	3.21	1.32	.90	42.2	6.61	−85.7	129.4	3.0	.372	.00627	−.0555	.00691
36R2	3.06	1.32	1.00	47.7	−2.06	−85.8	124.3	2.9	.370	.00132	−.0559	.00151
36R3	3.03	1.27	.95	46.8	.70	−85.9	125.3	3.0	.363	.00281	−.0489	.00294
36R3′	3.61	1.39	.91	41.4	1.17	−85.5	119.4	2.6	.454	.00277	−.0784	.00372
36R4	3.11	1.35	.97	45.7	−1.53	−85.4	121.4	3.1	.385	.00204	−.0610	.00253
37R1	3.14	1.31	.93	44.7	1.87	−85.8	127.3	3.0	.370	.00370	−.0563	.00478
37R3	3.15	1.30	.95	46.0	.74	−85.8	125.3	2.9	.377	.00314	−.0585	.00389
37R5	3.07	1.31	.94	44.4	−1.34	−85.5	120.3	3.1	.383	.00207	−.0607	.00273
37R7	2.97	1.31	.92	44.1	−.34	−85.2	120.4	3.4	.370	.00309	−.0562	.00410
47R1	3.12	1.26	1.03	51.7	−.87	−86.2	113.3	2.4	.413	.00274	−.0685	.00233
47R2	3.18	1.26	1.02	52.2	−.87	−86.2	113.2	2.3	.421	.00281	−.0770	.00235
47R3	3.26	1.25	1.04	54.5	−1.07	−86.7	116.2	2.1	.422	.00229	−.0694	.00176
47R4	3.08	1.31	1.03	51.8	−1.17	−85.8	115.3	2.7	.400	.00261	−.0641	.00220
49R1	3.26	1.31	1.04	50.2	−3.32	−86.0	111.3	2.4	.440	.00066	−.0763	.00067
49R2	3.26	1.34	1.05	50.1	−5.16	−84.4	118.6	3.5	.412	.00029	−.0676	.00030
49R3	3.23	1.31	1.04	50.3	−2.67	−86.3	120.3	2.4	.403	.00084	−.0638	.00085
49R4	3.19	1.27	1.04	50.6	−3.58	−86.6	107.3	2.3	.445	.00034	−.0702	.00029
49R4′	3.87	1.53	.86	39.2	14.71	−85.0	120.5	2.7	.482	.01714	−.0838	.02599
49R5	3.11	1.29	1.03	50.5	−2.57	−86.1	116.3	2.5	.400	.00070	−.0570	.00061
49R5′	3.57	1.43	1.06	46.5	14.31	−86.3	132.3	2.4	.405	.01241	−.0543	.01462
A58R2	2.97	1.31	1.01	49.7	−1.10	−85.5	116.4	3.0	.383	.00262	−.0609	.00248
A58R5	2.64	1.33	.97	47.5	1.95	−84.5	116.5	4.2	.340	.00433	−.0473	.00435
A58R6	2.66	1.33	.94	45.7	−.78	−84.4	116.6	4.3	.342	.00280	−.0487	.00304
59R1 [1]	2.74	1.33	.96	48.2	−1.07	−84.5	110.5	3.9	.372	.00319	−.0573	.00316
59R3	2.79	1.32	.98	49.3	−.21	−84.6	108.5	3.7	.385	.00402	−.0612	.00387
59R11	2.56	1.38	1.08	50.4	−.86	−84.3	109.5	4.2	.350	.00315	−.0493	.00276
59R11′	3.42	1.58	1.11	46.3	8.72	−84.7	114.5	3.1	.447	.01365	−.0807	.01473
71R3 [2]	2.82	1.30	.94	48.3	−5.03	−85.4	127.4	3.7	.332	−.00021	−.0436	−.00031
71R11	2.51	1.31	.95	47.8	−4.87	−84.7	124.5	4.6	.302	.00019	−.0340	−.00019
71R11′	3.25	1.50	.96	43.2	4.23	−84.6	120.5	3.5	.404	.00677	−.0648	.00835
73R1	3.06	1.29	.95	48.8	−1.27	−85.8	128.3	3.0	.363	.00185	−.0524	.00193
73R3	2.94	1.31	.89	45.2	−2.11	−85.2	126.4	3.6	.349	.00146	−.0490	.00174
73R5	2.86	1.37	.95	44.4	−1.75	−85.1	129.5	3.8	.332	.00152	−.0442	.00188
73R7	2.84	1.32	1.00	49.4	−4.95	−85.4	122.4	3.4	.348	−.00023	−.0476	−.00034
73R11	2.50	1.31	.91	44.4	−2.82	−84.1	117.6	4.9	.319	.00140	−.0408	.00174
73R11′	3.08	1.54	1.01	41.9	−4.07	−84.5	125.6	3.9	.350	.00082	−.0556	.00118
83R1	3.02	1.33	.98	46.2	2.53	−85.2	114.4	2.2	.397	.00519	−.0944	.00648
83R3	2.89	1.31	.93	46.4	.58	−84.8	114.5	3.6	.366	.00371	−.0589	.00464
83R5	2.93	1.33	.98	48.2	−1.19	−85.0	114.4	3.4	.384	.00260	−.0605	.00303
83R7	2.79	1.39	.97	46.5	.63	−84.3	114.6	4.1	.366	.00386	−.0546	.00475
83R9	2.69	1.37	.94	44.8	−1.43	−84.0	114.6	4.5	.352	.00249	−.0511	.00327
83R9′	3.16	1.55	.96	40.5	−4.75	−83.7	112.7	3.9	.421	.00112	−.0738	.00178
86R1	3.68	1.31	1.06	53.3	−4.58	−85.9	95.4	1.8	.578	−.00096	−.0138	.00097
86R2	3.61	1.33	1.08	54.3	−4.08	−85.9	95.4	1.9	.568	.00000	−.0132	.00000
86R3	3.50	1.39	1.14	53.6	−5.13	−85.6	96.4	2.1	.544	−.00119	−.0121	−.00014
B85R1	2.92	1.40	.97	45.9	−5.35	−84.1	106.9	2.8	.410	.00045	−.0720	.00051
B85R2	2.93	1.38	.97	47.1	−5.42	−84.2	106.8	3.7	.412	.00028	−.0723	.00030
B85R3	2.82	1.35	.96	48.0	−2.56	−84.1	104.6	3.8	.405	.00283	−.0698	.00289

[1] These figures are for 3 spins for which measured values were almost identical.
[2] These figures are for 2 spins for which measured values were almost identical.

TABLE III.—COMPUTED DATA—Continued

Test no.	Ω	R	Z''	α_X	β	γ	V	Radius	$\frac{\Omega b}{2V}$	C_l	C_m	C_n
	rad./sec.	*(mg)*	*(mg)*	°	°	°	*ft./sec.*	*Feet*				
87R2	3.67	1.62	0.93	37.1	17.05	−84.2	122.6	3.2	0.44	0.01718	−0.0731	0.02718
89R1	3.00	1.32	1.01	49.9	−3.37	−85.3	110.4	3.0	.408	.00119	−.0098	.00115
89R2	2.96	1.33	1.04	51.4	−2.88	−85.4	111.4	3.0	.398	.00146	−.0640	.00131
89R3	2.91	1.34	1.05	50.9	−3.29	−85.3	111.4	3.2	.392	.00119	−.0637	.00110
A89R1	2.83	1.32	1.02	49.3	−3.04	−85.1	111.4	3.4	.381	.00140	−.0602	.00136
A89R2	2.68	1.29	1.02	51.0	−4.61	−85.1	110.4	3.5	.364	.00020	−.0530	.00018
A89R3	2.85	1.37	1.07	49.9	2.00	−85.0	111.4	3.4	.383	.00537	−.0593	.00400
90R1	2.72	1.27	1.01	49.8	−.70	−85.3	111.4	3.4	.366	.00281	−.0629	.00338
90R2	2.70	1.31	1.00	48.3	−.71	−84.7	109.5	3.7	.370	.00323	−.0649	.00410
90R3	2.63	1.31	1.00	48.5	−.97	−84.6	111.5	3.9	.354	.00282	−.0594	.00356
91R1	3.04	1.22	.99	54.2	.19	−85.7	100.3	2.5	.454	.00520	−.0879	.00479
93R1	2.75	1.25	1.02	53.5	−4.72	−85.3	104.4	3.1	.395	−.00007	−.0674	−.00006
93R2	2.77	1.31	1.02	51.2	.41	−84.9	108.1	3.5	.382	.00437	−.0646	.00445
93R3	2.57	1.26	.98	52.2	−3.12	−84.5	103.6	3.8	.372	.00178	−.0606	.00176
95R1	3.35	1.29	1.03	52.1	−.50	−86.4	120.2	2.3	.418	.00294	−.0765	.00205
95R1′	3.66	1.42	1.00	44.9	−3.53	−86.2	134.3	2.4	.409	.00018	−.0758	.00023
B95R1	3.44	1.48	.98	43.0	−2.44	−84.2	101.5	3.0	.509	.00412	−.1167	.00567
B95R2	3.25	1.42	1.01	46.1	−4.65	−84.7	108.2	3.1	.451	.00063	−.0921	.00078
B95R3	3.26	1.48	.98	42.7	3.94	−84.5	114.3	3.3	.427	.00796	−.0804	.01087
96R1	3.26	1.29	.89	43.6	5.86	−85.0	106.6	2.8	.458	.01063	−.0951	.01521
96R2	3.11	1.28	.94	47.6	9.38	−85.0	104.4	2.9	.447	.01414	−.0875	.01725
96R3	3.12	1.27	.94	48.7	8.54	−85.4	109.3	2.8	.429	.01216	−.0809	.01441
97R1	3.03	1.29	.98	48.5	−8.79	−85.3	109.1	3.0	.417	−.00362	−.0806	−.00444
A97R1	3.10	1.24	.95	50.9	−5.88	−85.5	105.6	2.7	.441	−.00140	−.0893	−.00157
A97R2	3.04	1.25	.97	51.8	−6.24	−85.4	103.4	2.7	.441	−.00170	−.0890	−.00186
A97R3	2.88	1.32	.99	49.1	−7.32	−84.6	103.6	3.4	.416	−.00170	−.0804	−.00202
A96R2	3.12	1.23	.91	47.7	7.94	−85.5	109.0	2.8	.429	.01142	−.0820	.01399
A96R3	3.12	1.25	.93	47.8	7.80	−85.4	109.0	2.8	.430	.01136	−.0822	.01393
A104L1	−2.65	1.19	.95	52.3	−.21	−85.2	104.6	3.3	−.380	−.00376	−.0636	−.00400
A104L2	−2.82	1.18	.97	53.7	−5.92	−85.7	103.5	2.8	−.408	−.00892	−.0702	−.00890
A104L3	−2.67	1.22	.98	52.5	−2.20	−85.2	103.6	3.3	−.386	−.00624	−.0645	−.00654
A103L1	−2.81	1.21	.96	50.2	1.95	−85.3	104.5	3.0	−.403	−.00224	−.0733	−.00260
A103L3	−2.79	1.24	1.02	53.1	.84	−85.5	103.4	2.9	−.405	−.00317	−.0720	−.00332
A105L1	−3.46	1.19	.93	49.2	−.22	−85.8	95.5	2.0	−.544	−.00633	−.1342	−.00765
A105L2	−3.40	1.24	.97	49.5	.66	−85.8	99.3	2.1	−.514	−.00472	−.1197	−.00503
A105L3	−3.36	1.31	1.02	49.8	−.35	−85.6	103.4	2.3	−.487	−.00566	−.1071	−.00067
106L1	−2.84	1.22	.97	46.3	3.67	−85.5	106.6	2.9	−.400	−.00063	−.0724	−.00073
106L2	−2.70	1.25	1.00	42.9	5.73	−84.8	101.4	3.4	−.399	.00049	−.0721	.00057
106L3	−2.72	1.22	.99	46.3	4.94	−85.1	98.5	3.1	−.414	.00049	−.0764	.00053
A107R1	2.80	1.22	.97	50.5	−3.95	−85.5	110.3	3.0	.380	.00035	−.0656	.00041
A107R2	2.75	1.24	.98	50.2	−4.95	−85.3	109.2	3.2	.378	−.00023	−.0650	.00027
A107R3	2.78	1.20	.97	51.8	−4.27	−85.5	105.5	3.0	.395	.00018	−.0700	.00021
112R1	2.94	1.53	.94	47.8	−2.19	−83.0	108.4	4.5	.407	.00403	−.0767	.00493
112R2	2.77	1.52	.94	46.9	−3.60	−82.8	109.6	5.0	.379	.00263	−.0666	.00331
112R3	2.80	1.51	.95	48.0	−2.42	−83.0	111.9	4.8	.375	.00326	−.0652	.00395
113L1	−2.93	1.55	.99	49.7	−1.01	−82.9	106.2	4.5	−.414	−.00724	−.0775	−.00819
113L2	−2.92	1.52	.99	51.2	−2.18	−83.1	106.2	4.3	−.413	−.00816	−.0754	−.00871
113L3	−2.97	1.53	.96	50.0	−3.23	−83.1	106.1	4.3	−.420	−.00932	−.0783	−.01036
B114L1	−3.63	1.82	.99	45.4	2.83	−82.5	103.9	3.7	−.524	−.00620	−.1278	−.00830
B114L2	−3.53	1.79	1.03	48.0	1.83	−82.6	103.9	3.8	−.509	−.00738	−.1197	−.00896
B114L3	−3.47	1.80	1.04	47.0	2.73	−82.6	106.9	3.9	−.487	−.00552	−.1102	−.00699
E114L1	−3.69	1.77	.99	47.6	2.14	−82.5	97.8	3.5	−.565	−.00869	−.1479	−.01070
E114L2	−3.64	1.72	.98	48.3	1.95	−83.3	106.7	3.4	−.512	−.00644	−.1212	−.00772
E114L3	−3.60	1.78	1.01	47.6	.92	−82.6	102.8	3.7	−.525	−.00901	−.1269	−.01105
116L1	−2.85	1.49	.98	49.5	3.91	−83.4	109.4	4.4	−.390	−.00215	−.0702	−.00248
116L2	−2.78	1.46	.99	50.9	4.58	−83.2	106.1	4.5	−.393	−.00179	−.0705	−.00197
116L3	−2.76	1.45	.98	51.1	4.32	−83.2	105.7	4.5	−.392	−.00199	−.0701	−.00217
115L1	−3.13	1.55	.98	50.3	−7.75	−83.4	107.9	4.0	−.435	−.01389	−.0811	−.01514
115L2	−3.02	1.49	.99	51.2	−6.95	−83.8	109.3	3.9	−.414	−.01180	−.0739	−.01238
115L3	−2.99	1.51	.98	50.4	−11.25	−83.6	110.6	4.1	−.405	−.01461	−.0678	−.01553

TABLE IV.—SUMMARY OF SPIN RECOVERIES

Tail surfaces: Fin	Tail surfaces: Rudder	Tail surfaces: Elevator	Loading	Sense	Number of turns required for recovery: Allerons neutral, rudder reversed: Stick forward	Allerons neutral, rudder reversed: Stick back	Allerons neutral, rudder reversed: Stick neutral	Stick free, rudder reversed	Controls neutral	Controls free	Stick forward, rudder reversed: Allerons with	Stick forward, rudder reversed: Allerons against	Rudder neutral: Stick back	Rudder neutral: Stick free	Elevator neutral, rudder reversed: Allerons with	Elevator neutral, rudder reversed: Allerons against
PRELIMINARY TESTS—APPROXIMATE SPECIFIED LOAD (WITH PARACHUTE GEAR AND INSTRUMENTS)																
F4B-2	F4B-2 (34° max. throw).	F4B-2	Stripped	R	2½	2⅜	2½	1⅞	[1] 6	[1] 6						
				L	2	2	1½	1	2¾	5½						
Do	F4B-2 (35° max. throw).	Modified	do	R	2¼, 2¾	2½, 2⅝	1¾, 2¾	2, 2	[1] 6, [1] 9	[1] 6, [1] 10						
				L	2½, 2⅛	1¾, 1¾	1½, 1⅜	1¼, 1½	2¾, 1⅜	5½, 5⅜						
F4B-3	F4B-3	F4B-2	do	R	[2] 4	1½			3	[2] 2½, [1] 6	[4] 1¼	[5] 3				
				L	[2] 4	1			3½	[2] 3, [1] 6	[4] 1	[5] 2¼				
Do	do	do	Normal	R	[2] 3, [2] 2¼, [2] 3½, [2] 3¼	2¼, 1¾, 1⅞			6¼, [1] 9	[1] 8						
				L	¾, 1, [2] 3, [2] 3⅛	1½, 3, 1⅝			2½, 3½, 2½	[1] 8						
Do	do	do	Normal+radio+raft	R	[2] 2¾	1¾			4½, [1] 6							
				L	[2] 1½	1½			4½							
Do	do	do	Carrier overload	R	[2] 3½, [2] 4	2¼, 2½			[1] 8, [1] 7							
				L	[2] 2¼, [2] 1½	1⅜, 2			1¾, 1¼							
F4B-4	F4B-4	do	Stripped	R	1½, 1¼	1½, 1½			2½, 1⅞	[1] 0						
				L	½, 1⅛	2¾, 1¼, 2			1, ¾	[1] 3						
Do	do	do	Normal	R	1¾	1¾, 1¾		1½	6¾, [1] 6	[1] 8						
				L	1⅛	1⅜, 1⅞		1	2½, 1¼	[1] 9						
Do	do	do	Normal+radio+raft	R	1⅝	1¾			5, 8½					2¾		
				L	2	3⅛			2					1⅝		
Do	do	do	Carrier overload	R	2, [2] 3¾, [2] 3, [2] 4, 1¾	1¾			[1] 10							
				L	1½, [2] 2, [2] 2¼, 1½	2⅝			2¼							
Do	do	do	Normal, c. g. at 27% M. A. C.	R	1⅝	1½			3½, 3¼							
				L	1⅛	1⅜			1½							
Do	do	do	Stripped [6]	R	1¾	1½			[1] 6	[1] 7						
				L	1½	1⅝			2¼	[1] 10						
FINAL TESTS—EXACT SPECIFIED LOAD (WITHOUT PARACHUTE GEAR)																
F4B-2	F4B-2	F4B-2	Carrier overload	R	2⅝	[1] 6	4¼	2½	[1] 8	[1] 7½						
				L	2⅞	4	2	1⅝	3½	[1] 7½						
Do	do	Modified	Stripped	R	2	5½	2½	2	[1] 7	[1] 7						
				L	3½	[1] 6	1¾	1¾	3½	[1] 6						
Do	do	do	Carrier overload	R	1½	3¼	3¼	2¼	[1] 6	[1] 6						
				L	1½	[1] 0	1¼	1½	3¼	[1] 7						
F4B-3	F4B-3	F4B-2	Stripped	R	2, 1½	2¼, 1½	2⅛, 1¾	2⅛, 1½	[1] 10, 5½	[1] 14					1⅞	2¼
				L	1½, 1¾	1¾, 1½	1½, 1¼	1½, 1¾	3¼, 3¾	[1] 23, [1] 6					1½	3
Do	do	do	Normal	R	2½, 2, 2¼	2⅝, 2	2⅝, 2½	2⅛, 1¾	[1] 11, [1] 8	[1] 16, [1] 9					1¾	2¼
				L	1¼, 1⅜, 2	2¾, 1¾	1⅝, 1½	1½, 1¼	1¾, 1¾, 3½	[1] 8, [1] 7					1½	3⅛, 2⅛
Do	do	do	Normal+radio+raft	R	2¼, 1¾	2¼, 2¼	2¾, 2¼	2, 2	[1] 9, [1] 9	[1] 10, [1] 8					2	4½
				L	1¼, 2	1½, 1½	1⅜, 1¼	1⅛, 1	1½, 2½	[1] 12, [1] 9					1	2¾
Do	do	do	Carrier overload	R	2½, 1½	[1] 7, 2, 3, [2] 8½	2⅞, 2½	2, 1¾	[1] 10, [1] 6	[1] 11, [1] 9					2⅛	4¼
				L	1¾, 2½	7, 1¾, 2½, [2] 9	1½, 1¾	1⅜, 1½	2¼, 3½	[1] 10, [1] 8					1¼	3¼
F4B-4	F4B-4	do	Stripped	R	1½	1⅞	1¾	1½	4, 6	[1] 9, [1] 9, [1] 10						
				L	1⅛	1⅝	1¼	1¼	3, 3¼	5, 5						
Do	do	do	Normal	R	1⅞, 1¼	1¾, 1¾	1⅝, 1¼	1⅝, 1½	[1] 9	[1] 8						
				L	1⅛, 1	2, 1⅝, [1] 7	¾, 1¼, 1⅛	1⅛, 1¼	3	7						
Do	do	do	Normal+radio+raft	R	1½, 2	[1] 6, [1] 10, [1] 5½, [1] 6	1½, 2	1½, 1⅝	[1] 6	[1] 7, [1] 8						
				L	1½, 1¾	1½, 2¼, 3, 2½	1¼, 1¼	1⅛, 1	3, 2	[1] 7, [1] 6						
						3½, 4½, 3½, 2½, 1¼, 2¼, 1¾										
Do	do	do	Carrier overload	R	2, 1¾, 2¼	1½, 1¾	1¾, 2	1½, 1½	[1] 12, [1] 7	[1] 20					[4] 1½	[5] 3¼
				L	1½, 2½, 1½	[1] 6, 1¾, 4, 2, 5, 3, 1½, 2¼, 1½	1⅜, 1¼	1, 1¼	2¾, 2, 2½	[1] 9, [1] 7					½, ½	2½, 2¾
Do	do	Modified	Stripped	R	1¼, 1½	1⅜, 1¾	1¼, 1½	1¼, 1⅝	3½, 3⅞	[1] 7, [1] 10						
				L	2, 1⅛	2, 1½	1½, 1½	1¼, 1¼	1¾, 1⅝	[1] 9, [1] 10						
Do	do	do	Normal	R	1¼, 1½, 1½	1⅞, 1⅞, 1⅝	1¾, 1½, 1½	1⅝, 1½, 1½	[1] 10, 6, 5	[1] 20, [1] 8, [1] 7						
				L	1⅛, 1¾, 1¼	1⅛, 2¼, 1¾	1¼, 1¼, 1⅜	1⅛, 1¼, 1¼	1⅜, 3, 4	[1] 8, [1] 7, [1] 7						

[1] No recovery during number of turns shown.
[2] Rudder was moved against spin very slowly.
[3] Stick forward 2 turns before rudder was reversed.
[4] Steady spin has allerons with spin.
[5] Steady spin has allerons against spin.
[6] Parachute removed and equivalent ballast substituted.
[7] Made to determine effect of speed of rudder displacement. No recovery during number of turns shown.

TABLE IV.—SUMMARY OF SPIN RECOVERIES—Continued

TAIL SURFACES			LOADING	SENSE	NUMBER OF TURNS REQUIRED FOR RECOVERY											
					Ailerons neutral, rudder reversed			Stick free, rudder reversed	Controls neutral	Controls free	Stick forward, rudder reversed		Rudder neutral		Elevator neutral, rudder reversed	
Fin	Rudder	Elevator			Stick forward	Stick back	Stick neutral				Ailerons with	Ailerons against	Stick back	Stick free	Ailerons with	Ailerons against
FINAL TESTS—EXACT SPECIFIED LOAD (WITHOUT PARACHUTE GEAR)—Continued																
F4B-4	F4B-4	Modified	Normal+radio+raft	R	1, 1½, [3] 2¼, [3] 2⅛, [3] 2½, [3] 2⅝	1¾, 1¾, [3] 2½, [1, 2] 10 [3] 6, [3] 10	1⅝, 1½	1⅜, 1½	[1] 7, [1] 10	[1] 6, [1] 8						
				L	1⅛, 1¼, [3] 2¾, [3] 2¼, [3] 2⅜, [3] 2⅝	1⅜, 1¼, [3] 6, [3] 3½, [1] 7, 6	1¼, 1⅜	1¼, 1¼	2, 2, 1¾	[1] 7, [1] 7						
Do	do	do	Carrier overload	R	2, [3] 2½	2, 1, [3] 5	1½, 1⅞	1¾, 1½	[1] 7, [1] 6	[1] 6, [1] 7						
				L	1½, [3] 2	1½, 1, [3] 5	1⅛, 1½	1⅜, 1¼	2¾, 3¼	[1] 6, [1] 6						
Do	F4B-4 (35° max. throw).	do	do	R	2	1¾	2⅛	1½	[1] 6	[1] 6						
				L	1⅜	2½	1⅛	1	2¾	[1] 6						
F4B-4 & fin no. 1.	F4B-4	F4B-2	do	R	1½	1½	1½	1½	0½	[1] 6						
				L	1⅜	[1] 6	1¼	1¼	2¾	[1] 6						
F4B-4 & fin no. 2.	do	do	Stripped	R	1½, 1½				4½, 3¾							
				L	1½, 1¼				5, 1⅜							
Do	do	do	Carrier overload	R	1⅜, 1½	1⅝, 1½	1½, 1¼	1¼, 1⅜	4¾, [1] 6	[1] 6, [1] 6						
				L	1⅜, 1¼	1¼, 1¼	1, 1¼	1, 1¼	4, 4	[1] 6, [1] 6						
F4B-4 & fin no. 3.	do	do	Stripped	R	1⅞	2¼	1¾	1¾	[1] 6, [1] 6½							
				L	1⅛	3⅜	1¼	1⅜	1¾, 1¾							
Do	do	do	Carrier overload	R	1¾	1¾	2	1⅜	[1] 6	[1] 6						
				L	1½	5½, 1½	1½	1¼	2¾	[1] 6						
F4B-4	do	F4B-2, raised	Normal+radio+raft	R		1, 1, ⅞	⅞	¾, ¾, ¾	2½, 2¾, 3½			⅞, ⅞, ⅞	[1] 5, [1] 5	1¾, 2½, 2	¾, ¾, 1	⅝, ⅝, ⅝
				L	½, ⅝	1, ¾	¾	¾, ¾	1, 2½			¾, ⅝	[1] 3, [1] 5	1¾, 1¾	⅞, ⅞, ¾ [4] 1, [4] 1, [4] 1	⅞, ½, ⅝
Do	do	F4B-2, intermediate.	do	R	1, 1, 1	1¼, 1⅜	1⅛, 1⅜	1⅛, 1¼	4⅜, [1] 5			1⅛, 1		2⅝, 2¼	[5] 1¼, [5] 1¾, [5] 1¼ 1¼, 1	¾, 1
				L		1, 1⅜, 1¼, ⅞, 1⅛	1⅛, 1⅛	1⅛, 1¼	2, 4½			1⅛, 1		1¾, 2¼	1⅛, 1	¾, 1

[1] No recovery during number of turns shown.
[2] Rudder was moved against spin very slowly.
[3] Stick forward 2 turns before rudder was reversed.
[4] Steady spin has ailerons with spin.
[5] Steady spin has ailerons with spin. Recovery depends on speed of rudder displacement.