REPORT No. 542

POTENTIAL FLOW ABOUT ARBITRARY BIPLANE WING SECTIONS

By I. E. Garrick

SUMMARY

A rigorous treatment is given of the problem of determining the two-dimensional potential flow around arbitrary biplane cellules. The analysis involves the use of elliptic functions and is sufficiently general to include the effects of such elements as the section shapes, the chord ratio, gap, stagger, and decalage, which elements may be specified arbitrarily. The flow problem is resolved by making use of the methods of conformal representation. Thus the solution of the problem of transforming conformally two arbitrary contours into two circles is expressed by a pair of simultaneous integral equations, for which a method of numerical solution is outlined. It is pointed out that an inverse method of transforming conformally two circles into the wing profiles of a biplane arrangement leads readily to the development of related families of biplane combinations. Flow formulas are developed giving the velocity and pressure at any point of the surface of either profile of the arbitrary biplane arrangement, for any angle of attack. The theory of the monoplane wing section in potential flow is shown to be a degenerate case in which the elliptic functions reduce to trigonometric functions. The general method presented may be employed to determine the potential flow in any doubly connected region and hence may be applied to the single slotted wing or to the auxiliary-airfoil wing.

As an example of the numerical process, the pressure distribution over certain arrangements of the N. A. C. A. 4412 airfoil in biplane combinations is presented and compared with the monoplane pressure distribution.

INTRODUCTION

It is the purpose of this paper to develop a general theory of arbitrary biplane cellules of infinite span in potential flow. No attempt is made here to treat the case of finite span or to consider viscosity; rather it is the object of this work to bring the two-dimensional theory of biplane cellules in uniform, steady potential flow to the same degree of exactness and generality to which the two-dimensional monoplane airfoil theory has been brought. The analysis will be sufficiently general to include such elements as profile shapes, chord ratio, gap/chord, stagger, and decalage, and will contain as special cases the monoplane theory, as well as the theories of the slotted monoplane wing, of the auxiliary-airfoil wing, and of the influence of the ground or plane barriers on a monoplane airfoil in two-dimensional potential flow.

In order to arrive in a natural manner at a perspective of the biplane analysis it is advantageous to consider first the simpler case of the monoplane wing section and to keep in view the essential concepts that carry over to the biplane analysis. It is well known that by virtue of the methods of conformal representation the two-dimensional potential flow around a single obstacle can be obtained by the following process. In the first place, a standard contour is selected, the region about which is simply connected and the flow function of which in uniform potential flow is known or obtainable. The transformation must then be found that transforms conformally the region of the given obstacle into this standard region. This transformation, in combination with the known flow function, gives the desired flow function for the obstacle. In the case of monoplane wing profiles, the standard flow region may be chosen to be that about a circle and the theorem which states that it is possible to transform conformally the contour of the given obstacle into a circle is known as Riemann's theorem. (Cf., for example, reference 1.) In the case of two obstacles, the region is termed "doubly connected" and the process is again applicable except that the standard doubly connected region is chosen to be the region about two circles. The theorem that states the existence of a transformation function bringing the doubly connected region (region of the biplane contours) into the region of two circles is Koebe's theorem (reference 2).

The flow function giving the uniform potential flow for a circular cylinder is well known and, in determining the flow about a monoplane airfoil section, the main problem is the transforming of the airfoil contour into a circle. In order to attain this result in a simple manner it is necessary to perform a few intermediate transformations. The airfoil profile itself may be regarded as a contour described about a conveniently chosen line segment or chord. An

initial transformation of a simple type exists (the so-called "Joukowsky transformation") that transforms the chord into a unit circle and automatically maps the airfoil contour into a nearly circular contour described about the unit circle. There remains then the final task of transforming the nearly circular contour into a true circle, and this may be performed by a method given by Theodorsen (reference 3). This method leads directly to a simple integral equation which can be solved by a process of iteration or successive approximations and which converges with extreme rapidity. (Cf. reference 1.) It is important in regard to practical considerations to observe that the method is so powerful that one step in the process is quite sufficient in all ordinary cases.

The standard *doubly* connected region has been chosen as the region about two circles; and it is worthy of mention that only as recently as 1929 was the complex flow potential for two circles rigorously developed (by Lagally, reference 4). Dupont, Bonder, and Müller (references 5, 6, and 7) have also contributed to this problem but Lagally's solution is the more elegant. The flow function for two circles being known, the main problem in finding the flow about a biplane arrangement is the obtaining of the transformation mapping the two contours into two circles.

In a manner analogous to the case of the single airfoil section, the contours of a biplane arrangement may be considered to be described about a skeleton of two conveniently placed mean lines or chords. Hence, to maintain the analogy it is seen that initially it is desired to find a transformation function which transforms the two line segments into two circles. This problem has been touched upon by Kutta who has given the uniform potential flow for the special case of two parallel equal line segments (reference 8). The transformation function bringing two circles into any two *parallel* line segments has been developed by C. Ferrari (reference 9). In the first part of the present paper the more general problem of decalage of the line segments has been studied and a function developed that transforms two circles into any two nonintersecting line segments in any relative positions. This function that transforms the skeleton or chords of the biplane arrangement into two circles also transforms the contours themselves into two nearly circular contours described about the skeleton circles. There remains then the problem of transforming the two nearly circular contours into two true circles. In order to accomplish this task, the method of Theodorsen is generalized in the present paper to apply to doubly connected regions by employing the concentric circular ring region as a standard region and by utilizing a Laurent series development instead of a one-way power series. There is obtained finally a pair of simultaneous integral equations expressing the conformal representation of the two nearly circular contours into two circles. Just as in the case of the single integral equation in the monoplane case, there exists an analogous process of successive approximations or iteration that converges with the same remarkable degree of rapidity.

The general transformation from the biplane contours to two circles together with the Lagally formula for the flow about two circles yields an expression for the velocity and pressure at each point of the surface of either profile of the biplane arrangement. There are two arbitrary circulations in the flow formula, viz, the separate circulations around each contour, and these are determined uniquely by applying the well-known Kutta-Joukowsky condition to the trailing edges of both contours, specifying thereby that the flow leaves these edges smoothly.

In the case of monoplane wing theory it has been shown (reference 1) that theoretical shapes can be conveniently developed by an inverse method of transforming conformally a circle into a wing profile. The Joukowsky airfoils and the other so-called "theoretical" airfoils are special examples of this process. In an analogous manner it is possible to develop theoretical biplane combinations by an inverse process of transforming two circles into two contours resembling wing profiles. A general and flexible method of obtaining these shapes is presented; the results are especially instructive in that, in this process, the integral equations referred to in a preceding paragraph reduce to definite integrals.

Elliptic functions arise in a natural manner in the analysis and the problem treated provides a good illustration of the power and beauty of these remarkable functions. The general theory of the single, arbitrary wing section is shown to be a degenerate case in which the imaginary period of the doubly periodic elliptic functions becomes infinite, and hence the elliptic functions reduce to ordinary trigonometric functions. A few pages are devoted to the monoplane theory in view of the light that it throws on the more general biplane analysis.

Numerical results are presented only to furnish an illustration of the theory. In particular, the pressure distribution is determined for certain arrangements of the N. A. C. A. 4412 airfoil in biplane combinations. The elliptic functions that arise in the analysis and that are to be evaluated in a numerical case may fortunately, when necessary, be developed in rapidly convergent expansions.

Statement of the problem.—The problem treated in this paper may be restated as follows. Given, an arbitrary biplane arrangement oriented in a specified manner in a nonviscous, incompressible fluid medium and translated with uniform velocity V. To determine the velocity and pressure distribution in two-dimen-

sional potential flow in the field of motion for all angles of attack, particularly, at each point of the surface of the biplane profiles.

As has been pointed out, it is well recognized that the aforementioned problem may be treated in two stages. In the first place, the complex function expressing the conformal transformation of the region of the biplane into a standard doubly connected region must be obtained and, finally, the complex flow function for this standard region, which is chosen as the region about two circles, must be known. The region external to the two contours of a biplane arrangement will be brought into the region about two circles by the intermediate use of two nearly circular contours. Before this result can be accomplished, however, it is desirable to discuss several preliminary transformations.

1. PRELIMINARY TRANSFORMATIONS

First, the transformation bringing the region external to two nonintersecting circles (t plane) into the annular region between two concentric circles (w plane) will be obtained. This annular region will then be mapped into a rectangular region (s plane) and the rectangular region into the region about two line segments (u plane). (See fig. 1.)

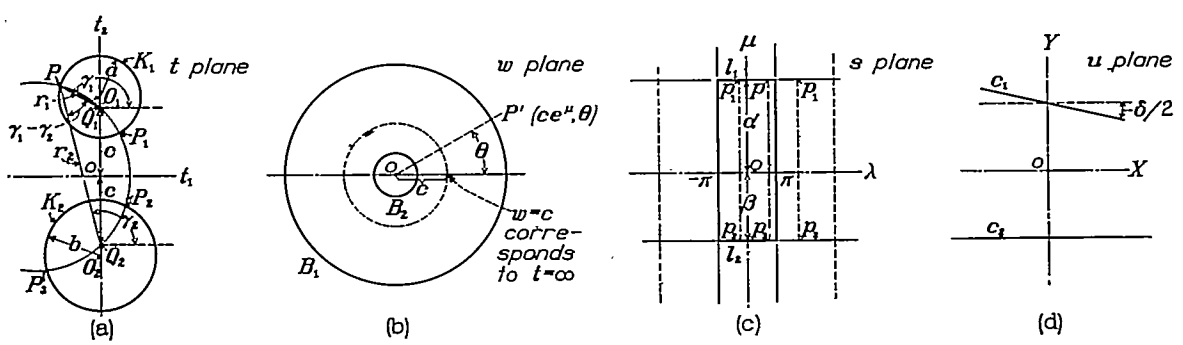

FIGURE 1.—Mapping of: (a) two coaxial circles in the t plane into (b) two concentric circles in the w plane, (c) rectangular region in the s plane, (d) two line segments in the u plane.

Transformation of a coaxial system of circles into a concentric system.—A coaxial system of circles may be described most simply by the use of bipolar coordinates. Consider a complex t plane where $t=t_1+it_2$. Let Q_1 $(0, ic)$ and Q_2 $(0,-ic)$ located on the t_2 axis be the origins of two polar coordinate systems r_1,γ_1 and r_2,γ_2. The variable t may be written in the two forms:

$$t=ic+r_1e^{i\gamma_1}=-ic+r_2e^{i\gamma_2}$$

Then in the relation

$$\frac{t+ic}{t-ic}=\frac{r_2}{r_1}e^{i(\gamma_2-\gamma_1)} \tag{1}$$

there are expressed in a convenient form, the bipolar coordinates $\frac{r_2}{r_1}$ and $\gamma_2-\gamma_1$. (See fig. 1 (a).)

The curves $r_2/r_1=$constant are circles with centers lying along the t_2 axis (theorem of Apollonius). This family of circles contains the points Q_1 and Q_2 as limiting circles of zero radius. For points in the upper half plane ($t_2>0$) we have $r_2/r_1>1$, for points in the lower half plane $r_2/r_1<1$, while on the t_1 axis, $r_2/r_1=1$. The curves given by $\gamma_2-\gamma_1=$constant also form a family of circles (theorem of the constant angle subtended by the chord of a circle) which is orthogonal to the first system and each circle of which contains the limit points Q_1 and Q_2 on its circumference.

A new complex variable $w=ce^{\mu+i\theta}$ is now introduced by the following relation

$$\frac{w}{c}=e^{\mu+i\theta}=\frac{t+ic}{t-ic}=\frac{r_2}{r_1}e^{i(\gamma_2-\gamma_1)} \tag{2}$$

Hence

$$\left.\begin{aligned}\mu&=\log\frac{r_2}{r_1}\\ \theta&=\gamma_2-\gamma_1\end{aligned}\right\} \tag{3}$$

Also

$$t=ic\frac{w+c}{w-c} \tag{4}$$

These equations transform conformally the coaxial system of circles of the t plane into a concentric system of circles in the w plane. In particular, two circles K_1 and K_2 in the t plane, K_1 located in the upper half plane and K_2 in the lower half plane and defined by $\log r_2/r_1=\alpha$ and $\log r_2/r_1=-\beta$, respectively ($\alpha>0, \beta>0$), transform into two concentric circles B_1 and B_2 about the origin in the w plane, of radii ce^{α} and $ce^{-\beta}$, respectively (fig. 1 (b)). It is noted also that the t_1 axis transforms into the circle of radius c in the w plane, and that the region at infinity in the t plane maps into the neighborhood of the point $w=c$. It may also be remarked that the circles orthogonal to K_1 and K_2 transform into radial lines through the origin.

Transformation of the circular systems into rectangular systems.—There is now introduced another variable $s=\lambda+i\nu$ defined by the relation

$$s=i\log\frac{w}{c}=i\log\frac{t+ic}{t-ic} \tag{5}$$

Separating into real and imaginary parts

$$\left.\begin{aligned}\lambda&=-(\gamma_2-\gamma_1)=-\theta\\ \nu&=\log\frac{r_2}{r_1}=\mu\end{aligned}\right\}\tag{6}$$

Hence the variable s may hereafter be denoted by

$$s=-\theta+i\mu \text{ or also by } s=\lambda+i\mu$$

Also from (5) we have

$$w=ce^{-is}\tag{7}$$

and

$$t=ic\left(\frac{1+e^{is}}{1-e^{is}}\right)=-c\cot\frac{s}{2}\tag{8}$$

The circles in the t plane, r_2/r_1=constant (or the circles in the w plane ce^{μ}=constant), correspond uniquely to the straight lines μ=constant in the s plane. In particular, the limiting points Q_1 and Q_2 correspond to $\mu=\infty$ and $\mu=-\infty$, respectively. Also the t_1 axis corresponds to the axis $\mu=0$, the point at infinity in the t plane going into the origin $s=0$. The circular arcs $\gamma_1-\gamma_2$=constant between Q_1 and Q_2 correspond to the lines λ=constant. It is noted, however, that this latter correspondence is infinitely many-valued since the addition of integral multiples of 2π to γ_1 or γ_2 does not alter the circular arc considered; hence, $\gamma_1-\gamma_2$=constant corresponds to the infinite number of parallel lines λ=constant$+2k\pi$, where k is any integer (fig. 1 (c)).

The whole t plane has thus infinitely many values on the s plane, but there is a one-to-one correspondence between the whole t plane and a strip of width 2π bounded by two parallels to the μ axis. In the following investigation, the strip in the s plane bounded by the lines $\lambda=-\pi$ and $\lambda=\pi$ will be considered as the representation of the t plane cut along the length $Q_1\,Q_2$.

Equation (5) thus defines a conformal transformation of the coaxial system of circles in the t plane, or of the concentric system of circles in the w plane, to a rectangular system in the s plane. In particular, consider again the two definite circles K_1 and K_2 of the coaxial pencil. The circle K_1 is defined by $\log r_2/r_1=\mu=\alpha$ and the circle K_2 by $\log r_2/r_1=\mu=-\beta$ where α and β are positive constants. It is then noted that the region of the t plane external to the circles K_1 and K_2 (or the ring region within B_1 and B_2) corresponds uniquely to the rectangular region bounded by the lines $\mu=\alpha$, $\mu=-\beta$, $\lambda=-\pi$, and $\lambda=\pi$. (The two sides $\lambda=-\pi$ and $\lambda=\pi$ correspond to the right and left edges respectively of a cut along the t_2 axis drawn between the two circles.) The rectangle contains, necessarily, the point $s=0$ as an internal point.

Geometrical relations.—Attention may be momentarily diverted to some geometrical relations existing in the various planes. Let the radii of K_1 and K_2 be a and b, respectively, and let the centers of K_1 and K_2 be situated at O_1 and O_2, respectively (fig. 1 (a)). The quantities a and b may be expressed in terms of α and β. The equation of K_1 in bipolar coordinates is, by equation (2)

$$\frac{r_2}{r_1}=\left|\frac{t+ic}{t-ic}\right|=e^{\alpha}$$

Writing $t=t_1+it_2$ there results upon expansion

$$t_1^2+t_2^2-2ct_2\coth\alpha+c^2=0$$

which is the equation of a circle whose center O_1 is situated at

$$t_2=c\coth\alpha$$

and whose radius is

$$a=c\operatorname{csch}\alpha$$

Similarly, for the second circle K_2, the center O_2 is at

$$t_2=-c\coth\beta$$

and the radius is

$$b=c\operatorname{csch}\beta$$

Denoting by d the center-to-center distance O_1O_2 (fig. 1), there may be written the equations:

$$\left.\begin{aligned}a&=c\operatorname{csch}\alpha\\ b&=c\operatorname{csch}\beta\\ d&=c\,(\coth\alpha+\coth\beta)\end{aligned}\right\}\tag{9}$$

which suffice to fix a, b, and d in terms of α, β, and c. Forming the auxiliary quantity $d^2-a^2-b^2$, it is found that $d^2-a^2-b^2=2ab\cosh(\alpha+\beta)$ It immediately follows that

$$\left.\begin{aligned}c&=\frac{ab}{d}\sinh(\alpha+\beta)\\ \sinh\alpha&=\frac{b}{d}\sinh(\alpha+\beta)\\ \sinh\beta&=\frac{a}{d}\sinh(\alpha+\beta)\end{aligned}\right\}\tag{10}$$

We observe that the quantity $\alpha+\beta$ on the right-hand side is expressed in terms of a, b, and d by the relation

$$\cosh(\alpha+\beta)=\frac{d^2-a^2-b^2}{2ab}$$

2. TRANSFORMATION OF TWO CIRCLES INTO TWO ARBITRARY LINE SEGMENTS

The transformation that maps the rectangular region in the s plane into the region external to two nonintersecting line segments in a u plane will now be derived. In combination with the preliminary transformations of the preceding section this result will then transform the region of the two circles K_1 and K_2 of the t plane, or the ring region of the w plane, into the region of the line segments. Let the u plane (fig. 1 (d)) contain the two line segments c_1 and c_2 and let $u(t)=X+iY$ be the analytic function that transforms the circles K_1 and K_2 into the desired line segments. With no loss in generality, the system of coordinates in the u plane may be so chosen that the X axis is parallel to c_2. Let the line segment c_1 be inclined at an angle $-\delta/2$ with respect to the X axis. (The negative sign before δ is a matter of later convenience; fig. 1(d)) may be

regarded as illustrating the definition of *positive* decalage.) Let l_1 and l_2 denote the two lines $\mu=\alpha$ and $\mu=-\beta$ of the rectangular s plane that correspond to K_1 and K_2, then, it is evident that $\frac{dY}{dX}=0$ for points of K_2 or l_2 and $\frac{dY}{dX}=-\tan\frac{\delta}{2}$ for points along K_1 or l_1. Let $f(s)=\frac{du}{ds}$ be the derivative of the function $u(s)$ that gives the desired correspondence between the u and s planes. From the well-known property of conformal mapping, viz, that tangents at corresponding points in the two planes differ in direction by the argument of the derivative function, it follows that the argument of $f(s)$ equals 0 (or π) along l_2 and equals $-\delta/2$ (or $-\delta/2+\pi$) along l_1, or

$$f(s) \text{ is a real quantity along } l_2$$

$$f(s)e^{i\delta/2} \text{ is a real quantity along } l_1$$

By a principle of Schwarz the as yet undetermined function $f(s)$ has the property of being extended by analytic continuation to the whole strip region in the s plane (fig. 1(c)) for, since $f(s)$ is real along l_2, its values for a pair of reflected points mirrored in the line l_2 are conjugate complex. Similarly the function $f(s)e^{i\delta/2}$ may be reflected about the line l_1. With successive alternate reflections in l_1 and l_2 $f(s)$ takes on values as shown in figure 2. For every two successive reflections the original values of $f(s)$ are repeated except for a multiplying factor $e^{-i\delta}$. Hence it is clear that $f(s)$ must satisfy the relation

$$f[s+2i(\alpha+\beta)]=f(s)e^{-i\delta} \tag{1}$$

Also, since $f(s)$ is a single-valued function of t, it satisfies the condition

$$f(s+2\pi)=f(s) \tag{2}$$

If $\delta=0$, then $e^{-i\delta}=1$ and it is seen at once that $f(s)$ is then a *doubly periodic* function, hence an elliptic function (of the first kind), of real period $2\omega=2\pi$ and of imaginary period $2\omega'=2i(\alpha+\beta)$. In the general case where $\delta\neq 0$, the function $f(s)$ is not a purely doubly periodic function but, since one of its periods gives rise to a multiplying factor, is an elliptic function of the second kind. It is completely determined, except for a constant, by its behavior at its poles, in the neighborhood of which the function becomes infinite (Hermite's theorem). In the present analysis, we shall consider the fundamental periodic rectangle as formed by the original transformed rectangle and its reflection in the line l_2 (fig. 2).

We now investigate the poles of the function $f(s)=\frac{du}{ds}$. We assume that at infinity $|u|=|t|$, in order that the regions at infinity in the u and t planes be equally magnified and map into each other (except for a possible change in direction), and we have

$$\left|\frac{du}{dt}\right|_{t=\infty}=1$$

or noting equation (1.8)[1]

$$\left|\frac{du}{dt}\right|_{t=\infty}=\left|\frac{du}{ds}\right|_{s=0}\cdot\left|\frac{ds}{dt}\right|_{t=\infty}=\left|\frac{du}{ds}\right|_{s=0}\cdot\left|\frac{2c}{t^2+c^2}\right|_{t=\infty}=1 \tag{3}$$

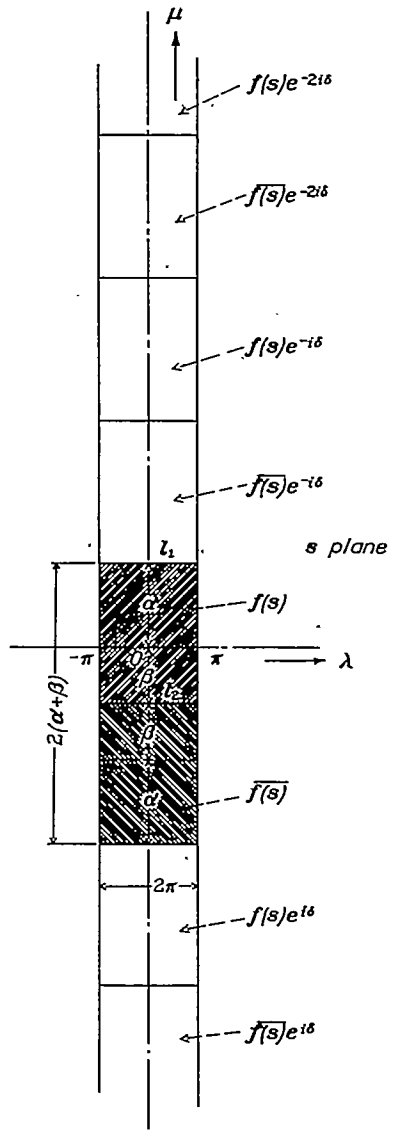

Figure 2.—Illustrating the properties of $\frac{du}{ds}=f(s)$ in the strip region: $\overline{f(s)}$ is the conjugate complex quantity of $f(s)$.

This relation shows at once that $f(s)$ possesses a singular point at $s=0$, and hence has one also at the point obtained by reflection of $s=0$ in l_2, viz, $s=-2i\beta$. In the neighborhood of these points $f(s)$ becomes infinite in the order of t^2 as $t\to\infty$ or as $\frac{1}{s^2}$ as $s\to 0$, i. e., has poles of *order two* at the origin $s=0$ and at $s=-2i\beta$.

[1] This notation denotes equation (8) of sec. 1.

The fundamental function having a single pole of *first order* (with residue unity) at the origin and satisfying the foregoing period requirements is (reference 10, p. 416, and reference 11, p. 369)

$$A(s)=\frac{e^{-\frac{\eta}{\omega}\delta s}\sigma(s+\delta)}{\sigma(\delta)\sigma(s)} \tag{4}$$

where σ denotes the sigma function of Weierstrass and possesses the following period properties

$$\left.\begin{aligned}\sigma(u+2\omega)&=-e^{-2\eta(u+\omega)}\sigma(u)\\ \sigma(u+2\omega')&=-e^{-2\eta'(u+\omega')}\sigma(u)\end{aligned}\right\} \tag{5}$$

The expression (4) for $A(s)$ may also be written as follows

$$A(s)=\frac{H'(0)H(s+\delta)}{H(\delta)H(s)} \tag{4'}$$

where the Jacobi H(eta) function is defined by the equation (cf. references 11 and 12)

$$H(u)=2q^{1/4}\sin\frac{\pi u}{2\omega}-2q^{9/4}\sin\frac{3\pi u}{2\omega}+2q^{25/4}\sin\frac{5\pi u}{2\omega}-\cdots \tag{6}$$

and possesses the period properties

$$H(u+2\omega)=-H(u)$$

$$H(u+2\omega')=-q^{-1}e^{-i\frac{\pi}{\omega}u}\,H(u)$$

where

$$q=e^{i\pi\frac{\omega'}{\omega}}$$

The relation existing between the σ and H functions is (reference 11, p. 488)

$$\sigma(u)=e^{\frac{\eta u^2}{2\omega}}\frac{H(u)}{H'(0)} \tag{7}$$

A function such as we are seeking, having a single pole of the *second order* at the origin and the required period properties, may be obtained by taking the *negative* derivative of $A(s)$ with regard to s. From equation (4′) we have

$$A'(s)=-\frac{dA(s)}{ds}=-\frac{H'(0)}{H(\delta)}\frac{d}{ds}\frac{H(s+\delta)}{H(s)} \tag{8}$$

The function $f(s)$ is now determined except for constants a_1 and a_2 is given by

$$f(s)=\frac{du}{ds}=a_1A'(s)+a_2A'(s+2i\beta)+a_3 \tag{9}$$

To determine the constants, observe that by means of equation (3), and by the fact that the expansion of $A'(s)$ about the origin begins with the term $\frac{1}{s^2}$, we have in the neighborhood of $s=0$

$$\left|\frac{du}{dt}\right|_{t=\infty}=\left|\frac{a_1}{s^2}\right|_{s=0}\cdot\left|\frac{2c}{t^2}\right|_{t=\infty}=1$$

and since from equation (1.8) $|t|_{t=\infty}=\left|\frac{2c}{s}\right|_{s=0}$ there results $|a_1|=2c$. Thus the magnitude of a_1 is determined and, in general, we may put $a_1=2ce^{i\gamma}$ where γ is an arbitrary real parameter that determines the stagger of the segments, and the significance of which will be seen shortly. It may be observed at this point that with $a_1=2ce^{i\gamma}$ the following relation holds

$$\left.\frac{du}{dt}\right|_{t=\infty}=e^{i\gamma}\left|\frac{du}{dt}\right|_{t=\infty}=e^{i\gamma} \tag{10}$$

i. e., the regions at infinity in the u and t planes agree in magnitude but differ by angle γ in direction. In order to determine a_2 it is sufficient to recall that $f(s)$ must remain real on l_2 hence it may be seen that a_2 must equal $2ce^{-i\gamma}$. Then finally equation (9) may be expressed as

$$\frac{du}{ds}=2c[A'(s)e^{i\gamma}+A'(s+2i\beta)e^{-i\gamma}] \tag{11}$$

The general function relating the u and s planes is then by integration with regard to s

$$u(s)=-2c[A(s)e^{i\gamma}+A(s+2i\beta)e^{-i\gamma}]+k \tag{12}$$

where the function $A(s)$ is given by (4) or (4′) and where k is an arbitrary constant that is independent of s but may contain the parameter δ.[2]

The singular points of transformation (12) are given by the roots of the equation $\frac{du}{ds}=0$. It is possible to draw at once certain conclusions with regard to the singular points. There exists a theorem on elliptic functions (reference 11, p. 366) which states that the number of zeros of an elliptic function (of the first or second kind) in a periodic rectangle is equal to the number of poles. Since $f(s)=\frac{du}{ds}$ has 2 poles of second order in the periodic rectangle it follows that the equation $\frac{du}{ds}=0$ possesses 4 roots in this rectangle. It is demonstrable without difficulty that 2 of the zeros are located on the boundary $\mu=\alpha$ and the remaining 2 on the boundary $\mu=-\beta$. These zeros correspond to the end points of the line segments c_1 and c_2 of the u plane. It may be stated for reference that on l_2 the singular values of λ are obtained from the equation

$$\frac{du}{ds}=0=A'(\lambda-i\beta)e^{i\gamma}+A'(\lambda+i\beta)e^{-i\gamma}$$

or since $A'(\lambda-i\beta)$ and $A'(\lambda+i\beta)$ are conjugate complex quantities, the singular points are given by the solutions of

$$\text{Re. } A'(\lambda-i\beta)e^{i\gamma}=0$$

where Re. denotes "real part of." On l_1, we employ the period property (1) of $A(s)$ and obtain for the equation satisfied by the singular values of λ

$$\text{Re. } A'(\lambda+i\alpha)e^{i(\gamma+\delta\beta)}=0$$

[2] The remainder of this section is commentary to this equation. The reader may, without loss of continuity, proceed to sec. 3, p. 56.

Developments of $A(s)$ convenient for numerical purposes will be discussed shortly. It may be of value to consider first several useful special examples of equation (12).

(a) Parallel segments of zero stagger[3] ($\delta=0$, $\gamma=0$).—It is necessary to observe first the limiting form of $A(s)$ as $\delta\to 0$. From equations (4) or (4′) (or cf. reference 10, p. 425) we have that

$$\lim_{\delta=0}\left(A(s)-\frac{1}{\delta}\right)=\frac{\sigma'(s)}{\sigma(s)}-\frac{\eta s}{\omega}=\zeta(s)-\frac{\eta s}{\omega}$$
$$=\frac{H'(s)}{H(s)}=Z_1(s) \tag{13}$$

where the various forms are equivalent. The functions σ and ζ are Weierstrass elliptic functions, and H and Z_1 (eta and zeta functions) are the elliptic functions of Jacobi and Hermite. Then putting for convenience the arbitrary constant $k=\frac{4c}{\delta}-ic$ in equation (12) we obtain

$$\lim_{\delta=0,\ \gamma=0} u(s)=U_1(s)=x+iy$$
$$=-2c[Z_1(s)+Z_1(s+2i\beta)]-ic \tag{14}$$

or (as given by Ferrari),

$$=-2c\left[\zeta(s)+\zeta(s+2i\beta)-\frac{2\eta s}{\omega}\right]+\text{const.}$$

Observing that the Z_1 function has the following period properties

$$Z_1(s+2\omega)-Z_1(s)=0$$
$$Z_1(s+2\omega')-Z_1(s)=-i$$

it follows that for $\mu=\alpha$, $y=c$ and for $\mu=-\beta$, $y=-c$. Hence the *gap* G between the line segments is $2c$. The case is illustrated in figure 3 (b).

The singular values of λ are in this case given by

$$\text{Re. } Z_1'(s+i\alpha)=0$$
$$\text{Re. } Z_1'(s-i\beta)=0$$

[3] The case of parallel line segments has been studied by Ferrari (reference 9).

or we may put down the complete equation for reference as follows. Noting that

$$Z_1'(s)=-\frac{d}{ds}\left[\zeta(s)-\frac{\eta s}{\omega}\right]=p(s)+\frac{\eta}{\omega}$$

where the Weierstrass p function is defined by $p(s)=-\frac{d}{ds}\zeta(s)$, and writing $s=\lambda+i\alpha$ the equation determining the singular points of c_1 is

$$p(\lambda+i\alpha)+p(\lambda-i\alpha)+\frac{2\eta}{\pi}=0 \tag{15}$$

The addition theorem (reference 10, p. 140) of the p function may be written

$$p(\lambda+i\alpha)=\frac{[p'(\lambda)-i\bar{p}'(\alpha)]^2}{4[p(\lambda)+\bar{p}(\alpha)]^2}-p(\lambda)+\bar{p}(\alpha) \tag{16}$$

Here, $\bar{p}(\alpha)=-p(i\alpha)$ and the bar designates that the elliptic function $\bar{p}$ is based on periods $2\bar{\omega}$ and $2\bar{\omega}'$ conjugate to the periods of p, i. e., $2\bar{\omega}=\frac{2\omega'}{i}$ and $2\bar{\omega}'=2i\omega$ (reference 10, p. 32). Making use of (16) and of the differential equations for the p and $\bar{p}$ functions:

$$p'(\lambda)^2=4p^3(\lambda)-g_2p(\lambda)-g_3$$
$$\bar{p}'(\alpha)^2=4\bar{p}^3(\alpha)-g_2\bar{p}(\alpha)+g_3$$

equation (15) becomes

$$Ap(\lambda)^2+Bp(\lambda)+C=0 \tag{17}$$

where

$$A=4[\eta/\pi-\bar{p}(\alpha)]$$
$$B=4\bar{p}(\alpha)^2+8(\eta/\pi)\bar{p}(\alpha)-g_2$$
$$C=4(\eta/\pi)\bar{p}(\alpha)^2+g_2\bar{p}(\alpha)-2g_3$$

This equation determines the two singular points for the upper segment c_1. In general, there is only one positive value of the root $p(\lambda)$, hence the singular points, $\lambda=\pm\lambda_s$, are symmetrical with respect to the origin. The negative root does not give real values for λ. For the lower line segment c_2 it is only necessary to replace α by β. (Cf. reference 10, p. 272: Given $p(\lambda)$, to find λ.)

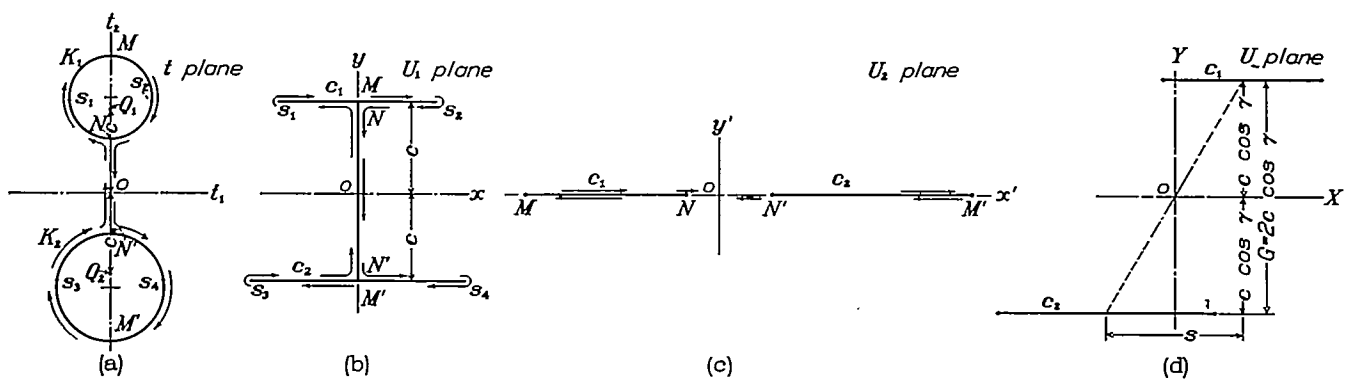

FIGURE 3.—Illustrating the case of *parallel* line segments: (a) t plane, (b) U_1 plane ($\delta=0$, $\gamma=0$), (c) U_2 plane ($\delta=0$, $\gamma=\pi/2$), (d) U plane ($\delta=0$, γ arbitrary).

The line segments c_1 and c_2 given by transformation 14) are without "stagger" since the midpoint of each segment is located on the y axis (fig. 3 (b)). In order to obtain further insight into the general transformation let us consider the case $\delta=0$, $\gamma=90°$.

(b) **Tandem parallel segments** $\left(\delta=0,\ \gamma=\frac{\pi}{2}\right)$.—In this case let the arbitrary constant $k=-c$ in transformation (12), and noting equation (13), we obtain

$$\lim_{\delta=0,\ \gamma=\frac{\pi}{2}} u(s)=U_2(s)$$
$$=-2ic[Z_1(s)-Z_1(s+2i\beta)]-c \qquad (18)$$
$$=-2ic[\zeta(s)-\zeta(s+2i\beta)]-c$$

It can be shown directly that the singular values of λ are 0 and π, for we have

$$\frac{dU_2}{ds}=0=p(s)-p(s+2i\beta) \qquad (19)$$

and if

$p(u)=p(v)$ we must have

$u=\pm v+2m\omega+2m'\omega'$ where m and m' are any integers. Hence, writing $s=\lambda+i\mu$ we have for the solutions of (19) in the fundamental periodic rectangle $\lambda_s=0$ and $\lambda_s=\pi$. Figure 3(c) shows a typical correspondence for this case.

(c) **Parallel segments of arbitrary stagger.**—Let the arbitrary constant $k=\left(\frac{4c}{\delta}-ic\right)\cos\gamma-c\sin\gamma$ in equation (12), and noting relation (13),

$$\lim_{\delta=0} u(s)=U(s)=U_1(s)\cos\gamma+U_2(s)\sin\gamma$$
$$=-2c(Z_1(s)e^{i\gamma}+Z_1(s)e^{-i\gamma})-ice^{-i\gamma} \qquad (20)$$

The function $U(s)$ is the general relation bringing the region about any two parallel line segments into a rectangular region in the s plane. In this transformation the values of the parameters α, β, and γ suffice to fix uniquely the *chord ratio* c_1/c_2, the *gap/chord* G/c_2, and the *stagger/chord* S/c_2 of the parallel segments. The gap between the line segments is $2c\cos\gamma$. Figure 3(d) illustrates the definitions of the various quantities. In the general case of parallel segments of arbitrary stagger, there are given the three ratios $c_1:c_2:G:S$ and the parameters α, β, and γ are to be determined. This problem involves the solution of transcendental relations; in this connection it is convenient to draw up charts, e. g., figure 4. This figure shows a cross plot that presents G/c_2, S/c_2 in terms of ω' and γ in the case of equal chords $c_1/c_2=1$, i. e., $\alpha=\beta$.

The singular points of equation (20) are defined by the relation

$$\frac{dU}{ds}=0=p(s)e^{i\gamma}+p(s+2i\beta)e^{-i\gamma}+\frac{2\eta}{\pi}\cos\gamma \qquad (21)$$

Writing $s=\lambda+i\alpha$ in (21) we have

$$\cos\gamma[p(\lambda+i\alpha)+p(\lambda-i\alpha)+2\eta/\pi]$$
$$+i\sin\gamma[p(\lambda+i\alpha)-p(\lambda-i\alpha)]=0$$

Employing the notation of equation (17) and the relations preceding equation (17), there results

$$a_4p^4(\lambda)+a_3p^3(\lambda)+a_2p^2(\lambda)+a_1p(\lambda)+a_0=0 \qquad (22)$$

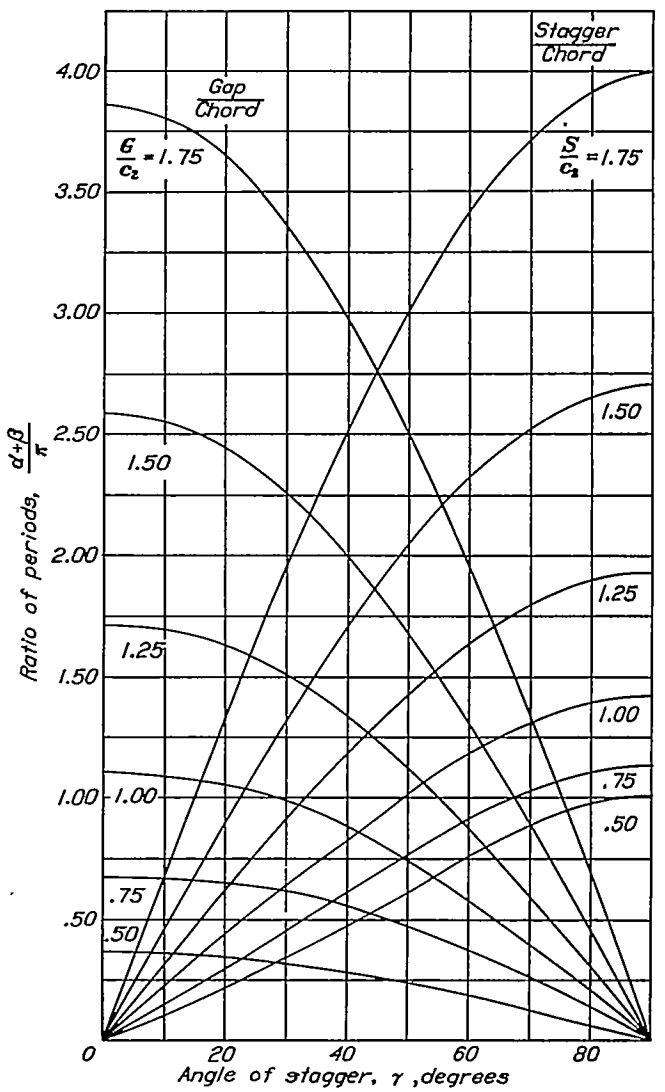

FIGURE 4.—Chart presenting the angle of stagger γ and the ratio of the periods $\frac{\alpha+\beta}{\pi}$ against gap/chord G/c_2, and stagger/chord S/c_2 in the special case of equal parallel line segments, ($\delta=0$, $\alpha=\beta$)

where

$$a_4=A^2d^2$$
$$a_3=2ABd^2-4$$
$$a_2=(B^2+2AC)d^2$$
$$a_1=2BCd^2+g_2$$
$$a_0=C^2d^2+g_3 \text{ and } d=\frac{1}{2}\frac{\cot\gamma}{\bar{p}'(\alpha)}$$

This equation suffices to determine the values of λ corresponding to the end points of the upper line seg-

ments c_1. In the case of the lower segment α is to be replaced by β. In general, there are only two positive solutions for $p(\lambda)$; and it may be observed that the solutions for both angles of stagger $\pm\gamma$ are contained in equation (22). (In sec. 4 approximations for the singular values of λ are given by simple formulas.)

Jacobi series—In order to obtain further insight into the general relation (12) and to separate $u(s)=X+iY$ into its real and imaginary parts it is necessary to revert to Jacobi expansions. These developments are especially useful where numerical evaluations are required.

By reference 10, page 416, we have the following expansion for the function $A(s)$:

$$A(s)=\frac{e^{-\frac{\eta}{\omega}\delta s}\sigma(s+\delta)}{\sigma(\delta)\sigma(s)}$$
$$=\frac{1}{2}\left(\cot\frac{s}{2}+\cot\frac{\delta}{2}\right)+2\sum_{m=1}^{\infty}\sum_{n=1}^{\infty}q^{2mn}\sin(ms+n\delta) \quad (23)$$

where

$$q=e^{i\pi\frac{\omega'}{\omega}}=e^{i\omega'}=e^{-(\alpha+\beta)}$$

The expression for $Z_1(s)$ occurring in the case of parallel segments is

$$\lim_{\delta=0}\left(A(s)-\frac{1}{2}\cot\frac{\delta}{2}\right)=Z_1(s)$$
$$=\frac{1}{2}\cot\frac{s}{2}+2\sum_{m=1}^{\infty}\sum_{n=1}^{\infty}q^{2mn}\sin ms \quad (23')$$

To separate $A(s)$ into real and imaginary parts, replace s by $\lambda+i\mu$ and note that

$$\cot\frac{\lambda+i\mu}{2}=\frac{\sin\lambda-i\sinh\mu}{\cosh\mu-\cos\lambda} \quad (24)$$

Then

$$A(s)=M(\lambda,\mu)+iN(\lambda,\mu)+\frac{1}{2}\cot\frac{\delta}{2} \quad (25)$$

where [4]

$$M(\lambda,\mu)=-\frac{\sin\lambda}{2(\cosh\mu-\cos\lambda)}+\sum_{m=1}^{\infty}\sum_{n=1}^{\infty}q^{2mn}\sin(m\lambda+n\delta)\cosh m\mu$$

$$N(\lambda,\mu)=-\frac{\sinh\mu}{2(\cosh\mu-\cos\lambda)}+\sum_{m=1}^{\infty}\sum_{n=1}^{\infty}q^{2mn}\cos(m\lambda+n\delta)\sinh m\mu$$

[4] The value of $q=e^{-(\alpha+\beta)}$ may always be kept less than $e^{-\pi}=0.0432$ by resorting when necessary, e. g., $\alpha+\beta$ small, to transformations that interchange the real and imaginary periods of the elliptic functions (reference 10, p. 266). Thus the expressions can always be made to converge very rapidly. Indeed, there exist several other expansions for $A(s)$ which though less simple in form are more rapidly convergent than the formula given here (reference 10, p. 422).

Let us put the arbitrary constant k equal to $(2c\cot\frac{\delta}{2}-ic)\cos\gamma-c\sin\gamma$ in equation (12) and separate $u(s)$ as follows

$$u(s)=X+iY$$
$$=u_1(s)\cos\gamma+u_2(s)\sin\gamma \quad (26)$$

where

$$u_1(s)=x+iy$$
$$=-2c[A(s)+A(s+2i\beta)]+2c\cot\frac{\delta}{2}-ic \quad (27)$$

and

$$u_2(s)=x'+iy'$$
$$=-2ic[A(s)-A(s+2i\beta)]-c \quad (28)$$

It is evident that $u_1(s)$ and $u_2(s)$ are generalizations of $U_1(s)$ and $U_2(s)$, given by equations (14) and (18) for the cases ($\delta=0$, $\gamma=0$) and ($\delta=0$, $\gamma=\pi/2$), respectively.

Employing relation (25), equation (27) giving $u_1(s)$ may be separated into

$$\left.\begin{aligned}x&=-2c[M(\lambda,\mu)+M(\lambda,\mu+2\beta)]\\ y&=-2c[N(\lambda,\mu)+N(\lambda,\mu+2\beta)]-c\end{aligned}\right\} \quad (27a)$$

It is observed that for $\mu=-\beta$, the coordinates become

$$\left.\begin{aligned}x_\beta&=-4cM(\lambda,\beta)\\ y_\beta&=-c\end{aligned}\right\} \quad (27b)$$

Equation (27a) is most useful in the neighborhood of $\mu=-\beta$. For values of μ near α, relation (27) is first rewritten by making use of the period property $A(s+2\omega')=A(s)e^{-is}$, and we have

$$\left.\begin{aligned}x&=-2c[M(\lambda,\mu)+M(\lambda,\mu-2\alpha)\cos\delta\\ &\quad+N(\lambda,\mu-2\alpha)\sin\delta]+c\sin\delta\\ y&=-2c[N(\lambda,\mu)+N(\lambda,\mu-2\alpha)\cos\delta\\ &\quad-M(\lambda,\mu-2\alpha)\sin\delta]+c\cos\delta\end{aligned}\right\} \quad (27c)$$

For $\mu=\alpha$, equation (27c) becomes

$$\left.\begin{aligned}x_\alpha&=-2c[M(\lambda,\alpha)(1+\cos\delta)-N(\lambda,\alpha)\sin\delta]\\ &\quad+c\sin\delta\\ y_\alpha&=-2c[N(\lambda,\alpha)(1-\cos\delta)-M(\lambda,\alpha)\sin\delta]\\ &\quad+c\cos\delta\end{aligned}\right\} \quad (27d)$$

It may be remarked that equations (27), which hold also for the special case $\delta=0$, show immediately that in this case $y_\beta=-c$ and $y_\alpha=c$, or that the gap of the parallel segments is $2c$. In the general case ($\delta\neq0$, $\gamma=0$) it is clear from (27d) that the point $(x_\alpha, y_\alpha)=(0, c)$ lies on c_1. The "gap" as measured along the y axis (i. e., from $x_\beta=0$ to $x_\alpha=0$) is therefore again $2c$. The effect of decalage may be considered to a first order to be a rotation of the segment c_1 for the case ($\delta=0$, $\gamma=0$) by the angle $\delta/2$ about the point $(0, c)$.

Employing relation (25), equation (28) giving $u_2(s)$ may be separated into

$$\left.\begin{aligned}x'&=-2c[-N(\lambda,\mu)+N(\lambda,\mu+2\beta)]-c\\ y'&=-2c[M(\lambda,\mu)-M(\lambda,\mu+2\beta)]\end{aligned}\right\} \quad (28a)$$

It is observed that for $\mu=-\beta$ the coordinates become

$$\left.\begin{aligned}x_\beta'&=-4cN(\lambda,\beta)-c\\ y_\beta'&=0\end{aligned}\right\} \quad (28b)$$

In the neighborhood of $\mu=\alpha$, it may be preferable to express equation (28a) as follows

$$\left.\begin{aligned} x'&=-2c[-N(\lambda,\mu)+N(\lambda,\mu-2\alpha)\cos\delta \\ &\quad -M(\lambda,\mu-2\alpha)\sin\delta]+c\cos\delta \\ y'&=-2c[M(\lambda,\mu)-M(\lambda,\mu-2\alpha)\cos\delta \\ &\quad -N(\lambda,\mu-2\alpha)\sin\delta]-c\sin\delta \end{aligned}\right\} \tag{28c}$$

For $\mu=\alpha$ the coordinates are seen to be

$$\left.\begin{aligned} x_\alpha'&=2c[N(\lambda,\alpha)(1+\cos\delta) \\ &\quad +M(\lambda,\alpha)\sin\delta]+c\cos\delta \\ y_\alpha'&=-2c[M(\lambda,\alpha)(1-\cos\delta) \\ &\quad +N(\lambda,\alpha)\sin\delta]-c\sin\delta \end{aligned}\right\} \tag{28d}$$

For $\delta=0$ it is clear from (28b) and (28d) that $y_\alpha'=y_\beta'=0$. In general, for $\delta\neq 0$ it can be seen that the coordinates $(x_\alpha', y_\alpha')=(-c,0)$ satisfy equation (28d), hence this point lies on c_1.

The general equation (12) or (26) may now be separated into

$$u(s)=X+iY \tag{29}$$

where

$$X=x\cos\gamma+x'\sin\gamma$$
$$Y=y\cos\gamma+y'\sin\gamma$$

In particular, it is clear from the foregoing that the lower segment c_2 is situated at $Y_\beta=-2c\cos\gamma$ and that the point $(X_\alpha, Y_\alpha)=(-c\sin\gamma, c\cos\gamma)$ lies on the segment c_1.

If there are given any two line segments in position, the three ratios $c_1:c_2:G:S$ are known (in addition δ is known), and the quantities α, β, and γ are to be determined. Equation (29) is transcendental and a direct solution for a given case is not available; however, an indirect procedure of building up charts similar to figure 4 (for which $\delta=0$) for different values of δ may be resorted to. The case of parallel segments, as well as the degenerate monoplane case (cf. sec. 4), will prove helpful in this procedure.

For later reference, the derivative expression $\frac{du}{ds}$ may be put down. We have

$$\frac{du}{ds}=\frac{du_1}{ds}\cos\gamma+\frac{du_2}{ds}\sin\gamma \tag{30}$$

where

$$\begin{aligned} \frac{1}{2c}\frac{du_1}{ds}&=A'(s)+A'(s+2i\beta) \\ &=P(\lambda,\mu)+iQ(\lambda,\mu) \\ \frac{1}{2c}\frac{du_2}{ds}&=i[A'(s)-A'(s+2i\beta)] \\ &=P'(\lambda,\mu)+iQ'(\lambda,\mu) \end{aligned}$$

In order to determine P, Q, P', and Q', the following development is noted

$$\begin{aligned} A'(s)&=\frac{1}{4\sin^2 s/2}\sum_{m=1}^{\infty}\sum_{n=1}^{\infty}mq^{2mn}\cos(ms+n\delta) \\ &=M'(\lambda,\mu)+iN'(\lambda,\mu) \end{aligned} \tag{31}$$

where

$$\begin{aligned} M'(\lambda,\mu)&=\frac{1-\cos\lambda\cosh\mu}{2(\cosh\mu-\cos\lambda)} \\ &\quad -\sum_{m=1}^{\infty}\sum_{n=1}^{\infty}mq^{2mn}\cos(m\lambda+n\delta)\cosh m\mu \\ N'(\lambda,\mu)&=\frac{-\sin\lambda\sinh\mu}{2(\cosh\mu-\cos\lambda)} \\ &\quad -\sum_{m=1}^{\infty}\sum_{n=1}^{\infty}mq^{2mn}\sin(m\lambda+n\delta)\sinh m\mu \end{aligned}$$

Hence,

$$\begin{aligned} P&=M'(\lambda,\mu)+M'(\lambda,\mu+2\beta) \\ Q&=N'(\lambda,\mu)+N'(\lambda,\mu+2\beta) \\ P'&=-N'(\lambda,\mu)+N'(\lambda,\mu+2\beta) \\ Q'&=M'(\lambda,\mu)-M'(\lambda,\mu+2\beta) \end{aligned}$$

And finally

$$\frac{du}{ds}=2c[P\cos\gamma+P'\sin\gamma+i(Q\cos\gamma+Q'\sin\gamma)] \tag{32}$$

The equations of this section may be simplified in the noteworthy special case in which $\alpha=\beta$. The constant $2i\beta$ is in this case equal to half the imaginary period, i. e., $2i\beta=\omega'$ and, in particular, the line segments c_1 and c_2 are equal. By reference 10, page 422, we have

$$A(s+\omega')=\frac{\sigma_3(s+\delta)}{\sigma_3(s)\sigma(\delta)}e^{-\frac{\eta_3\delta}{\omega}}e^{-i\frac{\delta}{2}}$$

$$=e^{-i\frac{\delta}{2}}\left(\frac{1}{2}\csc\frac{\delta}{2}+\sum_{m=1}^{\infty}\sum_{n=1}^{\infty}q^{(2n-1)m}\sin[ms+(n-1/2)\delta]\right)$$

This expression may therefore replace $A(s+2i\beta)$ in equations (26), (27), and (28). Similarly in equation (30) $A'(s+2i\beta)$ may be replaced by $A'(s+\omega')$ where

$$A'(s+\omega')=-e^{-i\frac{\delta}{2}}\sum_{m=1}^{\infty}\sum_{n=1}^{\infty}mq^{(2n-1)m}\cos[ms+(n-1/2)\delta]$$

3. TRANSFORMATION OF A NEARLY CIRCULAR RING REGION IN THE w PLANE INTO A TRULY CIRCULAR RING REGION IN THE z PLANE

In the foregoing sections, there have been obtained the equations transforming the region external to two circles (in the t plane); or the annular region between two concentric circles (in the w plane); or also a rectangular region (in the s plane); into the region external to any two nonintersecting line segments (in the u plane). It may now be imagined, for definiteness, that two airfoil profiles are generated about the two line segments as chords in the u plane (fig. 5 (a)). In the plane of the rectangle, the two profiles will correspond to curves of small amplitude extending

from $\lambda=-\pi$ to $\lambda=\pi$ near the boundary lines $\mu=\alpha$ and $\mu=-\beta$, respectively. In the ring region, the profiles will correspond to two nearly circular contours forming an annular region (fig. 5 (c)). It is intended to show how this annular region may be transformed into a concentric circular ring region (fig. 5 (e)).

At present it is assumed that the nearly circular ring region in the w plane corresponding to a given biplane cellule in the u plane is known. It is observed that this knowledge implies that equation (2.12) may be inverted and the variables λ, μ solved for in terms of x and y. How this task may be done is taken up in section 4. It is recalled here that the variable λ corresponds to $-\theta$ (equation (1.6)) and that the neighborhood of the point $w=c$, which corresponds to the region at infinity in the t or u planes, must be an internal point of the annular region.

The annular region in the w plane then contains two boundary contours, an outer contour B_1 and an inner contour B_2. Let the contour B_1 be defined by

$$w=ce^{\mu_1(\theta)+i\theta} \tag{1}$$

and the contour B_2 by

$$w=ce^{\mu_2(\theta)+i\theta} \tag{2}$$

where the range of θ may be chosen as $0\leqq\theta\leqq 2\pi$.

Consider now a z plane (fig. 5 (e)) containing two concentric circles about the origin, an outer circle C_1 that corresponds to B_1 and an inner circle C_2 that corresponds to B_2. The circle C_1 may be defined by

$$z=ce^{\sigma_1+i\varphi} \tag{3}$$

and the circle C_2 by

$$z=ce^{\sigma_2+i\varphi} \tag{4}$$

where the radii are respectively,

$$R_1=ce^{\sigma_1},\ R_2=ce^{\sigma_2},\ \sigma_1>0,\ \sigma_2<0$$

(At times it will be found convenient to denote σ_1 by α' and σ_2 by $-\beta'$).

Let the function that transforms the w plane conformally into the z plane be written as

$$w=ze^{h(z)} \tag{5}$$

where $z=ce^{\sigma+i\varphi}=Re^{i\varphi}$ and where $h(z)$ represents a Laurent series with complex coefficients:

$$h(z)=a_0+\sum_1^\infty(a_nz^n+a_{-n}z^{-n}) \tag{6}$$

where $R_2\leqq|z|\leqq R_1$, or with $z=Re^{i\varphi}$

$$h(z)=f(R,\varphi)+ig(R,\varphi) \tag{6'}$$

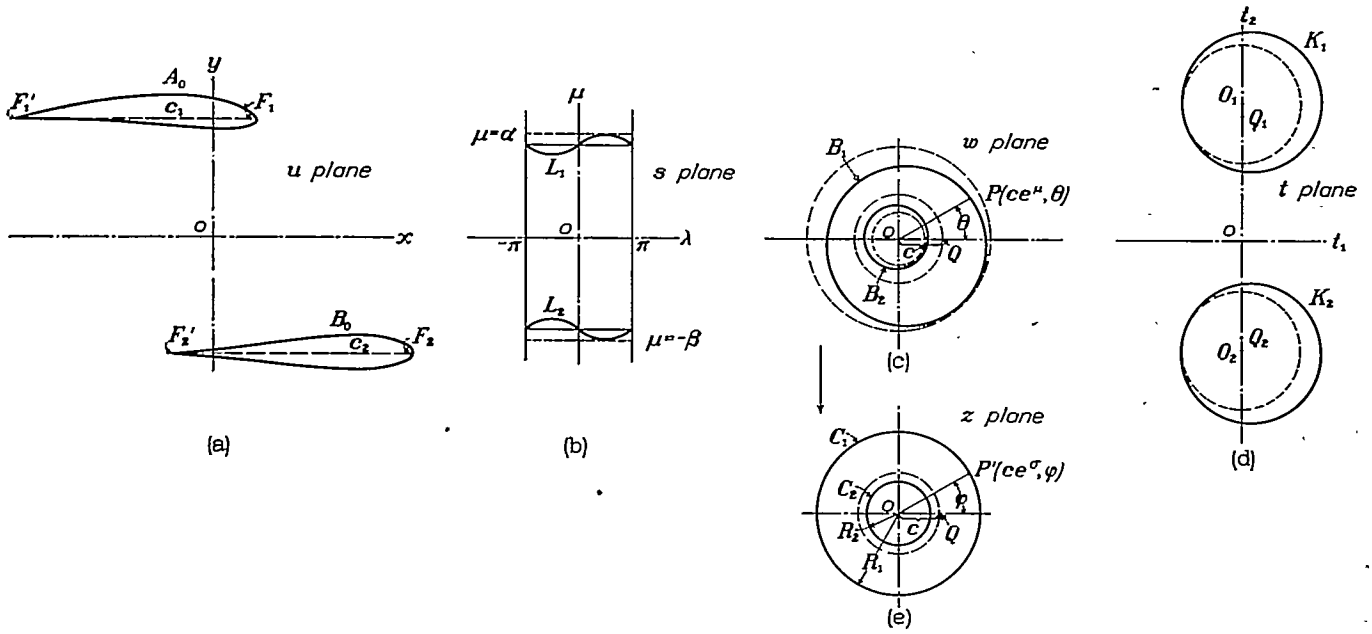

FIGURE 5.—Mapping of: (a) two contours A_0 and B_0 of a biplane arrangement into (b) two curved lines L_1 and L_2 in the s plane, (c) two nearly circular contours B_1 and B_2 of an annular region in the w plane, (d) two nearly circular contours K_1 and K_2 in the t plane, (e) two true circles C_1 and C_2 of the concentric ring region in the z plane.

It is seen that on C_1,

$$\log\frac{w}{z}=h(z)=h(R_1,\varphi)$$
$$=f(R_1,\varphi)+ig(R_1,\varphi)=\mu_1-\sigma_1+i(\theta-\varphi)_1$$

or, in short,

$$h_1(\varphi)=f_1(\varphi)+ig_1(\varphi)=\mu_1-\sigma_1+i(\theta-\varphi)_1 \tag{7}$$

where $(\theta-\varphi)_1$ means that the quantity $\theta-\varphi$ is evaluated around C_1. On C_2 similarly

$$h_2(\varphi)=f_2(\varphi)+ig_2(\varphi)=\mu_2-\sigma_2+i(\theta-\varphi)_2 \tag{8}$$

Let the complex coefficients in equation (6) be expressed as

$$\left.\begin{aligned}a_n&=A_n+iB_n\\ a_{-n}&=A_{-n}+iB_{-n}\end{aligned}\right\} \tag{9}$$

Then, from equations (6) and (7), it is found that

$$f_1(\varphi)=A_0+\sum_1^\infty[(A_nR_1^n+A_{-n}R_1^{-n})\cos n\varphi$$
$$-(B_nR_1^n-B_{-n}R_1^{-n})\sin n\varphi] \tag{10}$$

$$g_1(\varphi)=B_0+\sum_1^\infty[(B_nR_1^n+B_{-n}R_1^{-n})\cos n\varphi$$
$$+(A_nR_1^n-A_nR_1^{-n})\sin n\varphi] \tag{11}$$

Similarly

$$f_2(\varphi)=A_0+\sum_1^\infty[(A_nR_2^n+A_{-n}R_2^{-n})\cos n\varphi -(B_nR_2^n-B_{-n}R_2^{-n})\sin n\varphi] \quad (12)$$

$$g_2(\varphi)=B_0+\sum_1^\infty[(B_nR_2^n+B_{-n}R_2^{-n})\cos n\varphi +(A_nR_2^n-A_{-n}R_2^{-n})\sin n\varphi] \quad (13)$$

From equation (10),

$$\left.\begin{aligned} A_nR_1^n+A_{-n}R_1^{-n}&=a_{1,n}=\frac{1}{\pi}\int_0^{2\pi}f_1(\varphi)\cos n\varphi d\varphi\\ -B_nR_1^n+B_{-n}R_1^{-n}&=b_{1,n}=\frac{1}{\pi}\int_0^{2\pi}f_1(\varphi)\sin n\varphi d\varphi\\ \text{and}\quad A_0&=a_{1,0}=\frac{1}{2\pi}\int_0^{2\pi}f_1(\varphi)d\varphi=\frac{1}{2\pi}\int_0^{2\pi}\mu_1 d\varphi-\sigma_1 \end{aligned}\right\} \quad (14)$$

Similarly from equation (12),

$$\left.\begin{aligned} A_nR_2^n+A_{-n}R_2^{-n}&=a_{2,n}=\frac{1}{\pi}\int_0^{2\pi}f_2(\varphi)\cos n\varphi d\varphi\\ -B_nR_2^n+B_{-n}R_2^{-n}&=b_{2,n}=\frac{1}{\pi}\int_0^{2\pi}f_2(\varphi)\sin n\varphi d\varphi\\ \text{and}\quad A_0&=a_{2,0}=\frac{1}{2\pi}\int_0^{2\pi}f_2(\varphi)d\varphi=\frac{1}{2\pi}\int_0^{2\pi}\mu_2 d\varphi-\sigma_2 \end{aligned}\right\} \quad (15)$$

The equality $a_{1,0}=a_{2,0}=A_0$ is a condition of uniformity that is necessary since $h(z)$ is a regular analytic function in the ring region. There is, in addition, an arbitrary element in equations (10) to (13) (which may be chosen in a number of ways) viz, there is at our disposal the choice of the point in the z plane that shall correspond to, say $w=c$. This choice, which will be introduced at a later point (p. 14), is $z=c$ when $w=c$, and will fix the constants A_0 and B_0 in terms of R_1 and R_2 and the remaining coefficients.

From the first parts of equations (14) and (15), there is obtained on solving for A_n, A_{-n}, B_n, and B_{-n}

$$\left.\begin{aligned} A_n&=\frac{a_{1,n}R_2^{-n}-a_{2,n}R_1^{-n}}{\left(\frac{R_1}{R_2}\right)^n-\left(\frac{R_2}{R_1}\right)^n},\quad B_n=\frac{-b_{1,n}R_2^{-n}+b_{2,n}R_1^{-n}}{\left(\frac{R_1}{R_2}\right)^n-\left(\frac{R_2}{R_1}\right)^n}\\ A_{-n}&=\frac{-a_{1,n}R_2^{n}+a_{2,n}R_1^{n}}{\left(\frac{R_1}{R_2}\right)^n-\left(\frac{R_2}{R_1}\right)^n},\ \text{and}\ B_{-n}=\frac{-b_{1,n}R_2^{n}+b_{2,n}R_1^{n}}{\left(\frac{R_1}{R_2}\right)^n-\left(\frac{R_2}{R_1}\right)^n} \end{aligned}\right\} \quad (16)$$

Let

$$\frac{R_2}{R_1}=e^{-\tau}=q$$

where

$$\tau=\sigma_1-\sigma_2(=\alpha'+\beta')$$

Substituting by means of equation (16) in equation (11), it is seen that

$$g_1(\varphi)=B_0+\sum_1^\infty\left(\frac{b_{1,n}e^{n\tau}+b_{2,n}}{e^{n\tau}-e^{-n\tau}}+\frac{-b_{1,n}e^{-n\tau}+b_{2,n}}{e^{n\tau}-e^{-n\tau}}\right)\cos n\pi +\sum_1^\infty\left(\frac{a_{1,n}e^{n\tau}-a_{2,n}}{e^{n\tau}-e^{-n\tau}}+\frac{a_{1,n}e^{-n\tau}-a_{2,n}}{e^{n\tau}-e^{-n\tau}}\right)\sin n\varphi$$

$$g_1(\varphi)=B_0+\sum_1^\infty\left[-b_{1,n}\left(\frac{e^{n\tau}+e^{-n\tau}}{e^{n\tau}-e^{-n\tau}}\right) +b_{2,n}\left(\frac{2}{e^{n\tau}+e^{-n\tau}}\right)\right]\cos n\varphi +\sum_1^\infty\left[a_{1,n}\left(\frac{e^{n\tau}+e^{-n\tau}}{e^{n\tau}-e^{-n\tau}}\right)-a_{2,n}\left(\frac{2}{e^{n\tau}-e^{-n\tau}}\right)\right]\sin n\varphi$$

or also

$$g_1(\varphi)=B_0+\sum_1^\infty(-b_{1,n}\coth n\tau+b_{2,n}\operatorname{csch} n\tau)\cos n\varphi +\sum_1^\infty(a_{1,n}\coth n\tau-a_{2,n}\operatorname{csch} n\tau)\sin n\varphi \quad (17)$$

Similarly, by substitution of equation (16) in equation (13),

$$g_2(\varphi)=B_0+\sum_1^\infty(-b_{1,n}\operatorname{csch} n\tau+b_{2,n}\coth n\tau)\cos n\varphi +\sum_1^\infty(a_{1,n}\operatorname{csch} n\tau-a_{2,n}\coth n\tau)\sin n\varphi \quad (18)$$

Denoting the variable in equation (17) by φ' instead of φ and substituting by means of equations (14) and (15), it appears that

$$g_1(\varphi')=B_0+\frac{1}{\pi}\sum_1^\infty\int_0^{2\pi}f_1(\varphi)(-\sin n\varphi\cos\eta\varphi'+\cos n\varphi\sin n\varphi')\coth n\tau d\varphi +\frac{1}{\pi}\sum_1^\infty\int_0^{2\pi}f_2(\varphi)(\sin n\varphi\cos n\varphi'-\cos n\varphi\sin n\varphi')\operatorname{csch} n\tau d\varphi$$

or

$$g_1(\varphi')=B_0+\frac{1}{\pi}\sum_1^\infty\left[\int_0^{2\pi}f_2(\varphi)\sin n(\varphi-\varphi')\operatorname{csch} n\tau d\varphi-\int_0^{2\pi}f_1(\varphi)\sin n(\varphi-\varphi')\coth n\tau d\varphi\right] \quad (19)$$

In a similar manner,

$$g_2(\varphi')=B_0+\frac{1}{\pi}\sum_1^\infty\left[\int_0^{2\pi}f_2(\varphi)\sin n(\varphi-\varphi')\coth n\tau d\varphi-\int_0^{2\pi}f_1(\varphi)\sin n(\varphi-\varphi')\operatorname{csch} n\tau d\varphi\right] \quad (20)$$

The two series expressions

$$a)\ \sum_1^\infty \sin n(\varphi-\varphi')\coth n\tau$$

$$b)\ \sum_1^\infty \sin n(\varphi-\varphi')\operatorname{csch} n\tau$$

that occur in equations (19) and (20) may be evaluated in terms of elliptic functions. Consider the expansion for $\zeta(u)$ (reference 10, p. 403)

$$\zeta(u)-\frac{\eta u}{\omega_1}=Z_1(u)=\frac{\mathrm{H}'(u)}{\mathrm{H}(u)}$$

$$=\frac{\pi}{2\omega_1}\cot\frac{\pi u}{2\omega_1}+\frac{2\pi}{\omega_1}\sum_1^\infty\frac{q^{2n}}{1-q^{2n}}\sin\frac{n\pi u}{\omega_1}$$

In order not to confuse the periods occurring here with those of the preceding section, the real period is denoted by $2\omega_1=2\pi$, and the imaginary period by $2\omega_2=2i\tau$,

$$q=e^{i\pi\frac{\omega_2}{\omega_1}}=e^{-\tau}=\frac{R_2}{R_1}$$

Then

$$Z_1(u)=\frac{1}{2}\cot\frac{u}{2}+2\sum_1^\infty\frac{e^{-2n\tau}}{1-e^{-2n\tau}}\sin nu$$

$$=\sum_1^\infty\sin nu+\sum_1^\infty\left(\frac{1+e^{-2n\tau}}{1-e^{-2n\tau}}-1\right)\sin nu$$

$$=\sum_1^\infty\coth n\tau\sin nu \tag{21}$$

Consider the expansion for $\zeta(u+\omega_2)$ (reference 10, p. 426) [5]

$$\zeta(u+\omega_2)-\frac{\eta(u)}{\pi}-\eta'=Z(u)=\frac{\Theta'(u)}{\Theta(u)}$$

$$=\frac{2\pi}{\omega_1}\sum_1^\infty\frac{q^n}{1-q^{2n}}\sin\frac{n\pi u}{\omega_1}$$

For $\omega_1=\pi$ this expression becomes

$$Z(u)=\sum_1^\infty\frac{2e^{-n\tau}}{1-e^{-2n\tau}}\sin nu$$

$$=\sum_1^\infty\operatorname{csch} n\tau\sin nu \tag{22}$$

Then replacing u by $\varphi-\varphi'$, equations (19) and (20) become

$$g_1(\varphi')=B_0+\frac{1}{\pi}\int_0^{2\pi}f_2(\varphi)Z(\varphi-\varphi')d\varphi$$
$$-\frac{1}{\pi}\int_0^{2\pi}f_1(\varphi)Z_1(\varphi-\varphi')d\varphi \tag{23}$$

$$g_2(\varphi')=B_0+\frac{1}{\pi}\int_0^{2\pi}f_2(\varphi)Z_1(\varphi-\varphi')d\varphi$$
$$-\frac{1}{\pi}\int_0^{2\pi}f_1(\varphi)Z(\varphi-\varphi')d\varphi \tag{24}$$

Since $Z(u)=\frac{\Theta'(u)}{\Theta(u)}$ and $Z_1(u)=\frac{\mathrm{H}'(u)}{\mathrm{H}(u)}$, there is obtained also by integration by parts:

$$g_1(\varphi')=B_0-\frac{1}{\pi}\int_0^{2\pi}f_2'(\varphi)\log\Theta(\varphi-\varphi')d\varphi$$
$$+\frac{1}{\pi}\int_0^{2\pi}f_1'(\varphi)\log\mathrm{H}(\varphi-\varphi')d\varphi \tag{23'}$$

$$g_2(\varphi')=B_0-\frac{1}{\pi}\int_0^{2\pi}f_2'(\varphi)\log\mathrm{H}(\varphi-\varphi')d\varphi$$
$$+\frac{1}{\pi}\int_0^{2\pi}f_1'(\varphi)\log\Theta(\varphi-\varphi')d\varphi \tag{24'}$$

where the logarithm operates only on the absolute value of the quantities $\Theta(\varphi-\varphi')$ and $\mathrm{H}(\varphi-\varphi')$.

In a manner similar to the foregoing procedure it is possible to solve for the coefficients in equations (11) and (13), substitute in equations (10) and (12), and obtain as the reciprocal relations to (23) and (24) the following:

$$f_1(\varphi')=A_0-\frac{1}{\pi}\int_0^{2\pi}g_2(\varphi)Z(\varphi-\varphi')d\varphi$$
$$+\frac{1}{\pi}\int_0^{2\pi}g_1(\varphi)Z_1(\varphi-\varphi')d\varphi \tag{25}$$

$$f_2(\varphi')=A_0-\frac{1}{\pi}\int_0^{2\pi}g_2(\varphi)Z_1(\varphi-\varphi')d\varphi$$
$$+\frac{1}{\pi}\int_0^{2\pi}g_1(\varphi)Z(\varphi-\varphi')d\varphi \tag{26}$$

Equations (23) and (24), which essentially express a pair of boundary-value relations for a concentric ring region, permit the obtaining of the imaginary parts of a complex function $h(z)$ along the boundary circles of a ring region from a knowledge of the real parts along the boundaries. These equations are fundamental in a potential-theory study of ring regions; they have been developed in a different manner and for another purpose by Henri Villat in 1912 (reference 13, p. 147). It will be shown shortly that equations (23) and (24), when generalized and regarded as integral equations instead of being considered as definite integrals, make it possible to obtain the complete correspondence which we are seeking for doubly connected regions.

[5] For reference, note the definition of the Θ function (cf. references 11 and 12)

$$\Theta(u)=1-2q\cos\frac{\pi u}{\omega}+2q^4\cos\frac{2\pi u}{\omega}-2q^9\cos\frac{3\pi u}{\omega}+\ldots$$

The H function is defined in equation (2.6) of the preceding section. Some writers on elliptic functions use Θ_0 and Θ_1 to denote the Θ and H functions.

The function giving the value of $h(z)$ at any point *interior* to the ring region may also be expressed in terms of the real parts of $h(z)$ along the boundaries C_1 and C_2. From equation (16),

$$a_n=A_n+iB_n=\frac{1}{2\pi \sinh n\tau}\left[R_2^{-n}\int_0^{2\pi} f_1(\varphi)e^{-in\varphi}d\varphi-R_1^{-n}\int_0^{2\pi} f_2(\varphi)e^{-in\varphi}d\varphi\right]$$

$$a_{-n}=A_{-n}+iB_{-n}=\frac{1}{2\pi \sinh n\tau}\left[-R_2^{n}\int_0^{2\pi} f_1(\varphi)e^{in\varphi}d\varphi+R_1^{n}\int_0^{2\pi} f_2(\varphi)e^{in\varphi}d\varphi\right]$$

Then equation (6)

$$h(z)=a_0+\sum_1^\infty (a_nz^n+a_{-n}z^{-n})$$

becomes

$$h(z)=a_0-\frac{1}{\pi}\int_0^{2\pi} f_1(\varphi)Md\varphi+\frac{1}{\pi}\int_0^{2\pi} f_2(\varphi)Nd\varphi \qquad (27)$$

where

$$M=\sum_1^\infty \frac{R_2^nz^{-n}e^{in\varphi}-R_2^{-n}z^ne^{-in\varphi}}{2\sinh n\tau}$$

$$N=\sum_1^\infty \frac{R_1^nz^{-n}e^{in\varphi}-R_1^{n}z^ne^{-in\varphi}}{2\sinh n\tau}$$

The quantities M and N may be readily expressed in terms of elliptic functions. Let

$$e^{inv_2}=R_2^nz^{-n}e^{in\varphi}$$

Then by equation (22),

$$M=\sum_1^\infty \frac{i\sin nv_2}{\sinh n\tau}=\frac{\Theta'(v_2)}{i\Theta(v_2)}=iZ(v_2)$$

Similarly let

$$e^{inv_1}=R_1^nz^{-n}e^{in\varphi}$$

Then

$$N=i\frac{\Theta'(v_1)}{\Theta(v_1)}=iZ(v_1)$$

Then finally

$$h(z)=a_0-\frac{i}{\pi}\int_0^{2\pi} f_1(\varphi)Z(v_2)d\varphi+\frac{i}{\pi}\int_0^{2\pi} f_2(\varphi)Z(v_1)d\varphi \qquad (28)$$

where

$$v_2=i\log\frac{z}{R_2}+\varphi$$

$$v_1=i\log\frac{z}{R_1}+\varphi$$

or writing

$$z=ce^{\sigma+i\varphi'}$$

$$v_2=\varphi-\varphi'+i(\sigma-\sigma_2)$$

$$v_1=\varphi-\varphi'+i(\sigma-\sigma_1)$$

Determination of the constants A_0 and B_0.—It will be recalled that the neighborhood of the point $w=c$ corresponds to the region at infinity in the t and u planes. In order to make the correspondence of the w and z planes unique the following condition is put down. Let $z=c$ when $w=c$, hence causing the region about $z=c$ to correspond also to the region at infinity in the t and u planes. There is, however, an essential fact to be noted, viz, $\frac{dw}{dz}$ evaluated for $z=c$ is, in general, different from unity, hence generally a magnification and rotation of the regions near $w=c$ and $z=c$ exists in the two planes.

The conditions to be studied are

$$w=c \qquad (29)$$

$$\frac{dw}{dz}=re^{i\xi}, \text{ evaluated for } z=c \qquad (29')$$

From equation (5)

$$w=ze^{h(z)}$$

there is obtained

$$\frac{dw}{dz}=e^{h(z)}\left(1+z\frac{dh(z)}{dz}\right) \qquad (30)$$

The condition (29) then corresponds to

$$[h(z)]_{z=c}=0 \qquad (31)$$

And, in view of the preceding relations, equation (29′) corresponds to

$$\left[z\frac{dh(z)}{dz}\right]_{z=c}=re^{i\xi}-1=p+iq \qquad (31')$$

where it is noted that r and ξ are given in terms of p and q as follows:

$$r^2=(1+p)^2+q^2$$

$$\xi=\tan^{-1}\frac{q}{1+p}$$

By equations (6) and (9), it is found that equation (31) separates into

$$A_0+\sum_1^\infty (A_nc^n+A_{-n}c^{-n})=0 \qquad (32)$$

$$B_0+\sum_1^\infty (B_nc^n+B_{-n}c^{-n})=0 \qquad (33)$$

Also equation (31′) becomes

$$\sum_1^\infty n(A_nc^n-A_{-n}c^{-n})=p \qquad (34)$$

$$\sum_1^\infty n(B_nc^n-B_{-n}c^{-n})=q \qquad (35)$$

These equations may also be expressed in other forms. For example, from equation (28), since $z=c$ corresponds to $\sigma=0$, $\varphi'=0$, we have that

$$h(c)=0=A_0+iB_0-\frac{i}{\pi}\int_0^{2\pi} f_1(\varphi)Z(v_2)d\varphi$$
$$+\frac{i}{\pi}\int_0^{2\pi} f_2(\varphi)Z_2(v_1)d\varphi$$

where

$$v_2=\varphi-i\sigma_2,$$

and

$$v_1=\varphi-i\sigma_1$$

Employing equation (22), this separates into

$$A_0-\frac{1}{\pi}\sum_1^\infty \frac{\sinh n\sigma_2}{\sinh n\tau}\int_0^{2\pi} f_1(\varphi)\cos n\varphi d\varphi$$
$$+\frac{1}{\pi}\sum_1^\infty \frac{\sinh n\sigma_1}{\sinh n\tau}\int_0^{2\pi} f_2(\varphi)\cos n\varphi d\varphi=0 \quad (32')$$
$$B_0-\frac{1}{\pi}\sum_1^\infty \frac{\cosh n\sigma_2}{\sinh n\tau}\int_0^{2\pi} f_1(\varphi)\sin n\varphi d\varphi$$
$$+\frac{1}{\pi}\sum_1^\infty \frac{\cosh n\sigma_1}{\sinh n\tau}\int_0^{2\pi} f_2(\varphi)\sin n\varphi d\varphi=0 \quad (33')$$

In these equations f_1 and f_2 may each be altered by the addition of a constant without altering the values of the integrals. Hence, if $f_1(\varphi)-A_0$, $f_2(\varphi)-A_0$ are known (i. e., only the variational parts of f_1 and f_2 are known) and if there are also given or known the quantities $R_1=ce^{\sigma_1}$, $R_2=ce^{\sigma_2}$, equations (32′) and (33′) determine directly the constants A_0 and B_0 so that condition (31) is satisfied.

Since μ_1 and μ_2 differ from f_1 and f_2 by constants (cf. equations (7) and (8)) they may replace f_1 and f_2 in equations (32′) and (33′). Also, by equations (14) and (15) it is recalled that

$$A_0=\frac{1}{2\pi}\int_0^{2\pi}\mu_1 d\varphi-\sigma_1=\frac{1}{2\pi}\int_0^{2\pi}\mu_2 d\varphi-\sigma_2$$

or that $\tau=\sigma_1-\sigma_2=\frac{1}{2\pi}\int_0^{2\pi}(\mu_1-\mu_2)\,d\varphi$. Hence, if there are given the functions μ_1 and μ_2 (therefore τ is known), equation (32′) determines the individual quantities σ_1 and σ_2 (i. e., the radii R_1 and R_2). Equation (33′) then again defines the value of the constant B_0.

By the use of equations (15) and (16), the conditions (34) and (35) may also be written in other forms. Thus

$$p=\frac{1}{\pi}\sum_1^\infty \frac{n\cosh n\sigma_2}{\sinh n\tau}\int_0^{2\pi} f_1(\varphi)\cos n\varphi d\varphi$$
$$-\frac{1}{\pi}\sum_1^\infty \frac{n\cosh n\sigma_1}{\sinh n\tau}\int_0^{2\pi} f_2(\varphi)\cos n\varphi d\varphi \quad (34')$$
$$q=\frac{1}{\pi}\sum_1^\infty \frac{n\sinh n\sigma_2}{\sinh n\tau}\int_0^{2\pi} f_1(\varphi)\sin n\varphi d\varphi$$
$$-\frac{1}{\pi}\sum_1^\infty \frac{n\sinh n\sigma_1}{\sinh n\tau}\int_0^{\pi} f_2(\varphi)\sin n\varphi d\varphi \quad (35')$$

Further study of equations (23) and (24).—It has already been mentioned that there are two points of view from which the simultaneous equations (23) and (24) may be studied. In one, the equations are regarded as definite integral evaluations and the functions $f_1(\varphi)$ and $f_2(\varphi)$ are known as functions of the variable φ. In the other, the equations are regarded as integral equations and the functions are known in terms of θ, not φ. In the next few paragraphs the definite-integral viewpoint will first be employed and it will be shown how it may be used to develop biplane arrangements in an artificial or indirect manner. The results obtained by this method will also be of some interest and value when the more direct integral-equation point of view is investigated in the subsequent section.

Families of biplane arrangements.—When $f_1(\varphi)$ and $f_2(\varphi)$ are known functions, the evaluation of equations (23) and (24) determine the "conjugate" functions $g_1(\varphi)$ and $g_2(\varphi)$. It may be observed that the Fourier series expansions of $f_1(\varphi)$ and $g_1(\varphi)$ and of $f_2(\varphi)$ and $g_2(\varphi)$ are related by the peculiar interchange of coefficients as seen in equations (10) to (13). The existence of the integrals in equations (23) and (24) requires only that $f_1(\varphi)$ and $f_2(\varphi)$ be piecewise continuous and differentiable, and have no poles of order equal to or greater than one. In this paper, however, the only interest is in continuous, single-valued functions f_1 and f_2, of period 2π, and satisfying the conditions of uniformity (cf. paragraph following equation (15)), such functions as may always be associated with the conformal transformation of doubly connected regions bounded by continuous closed contours for a proper choice of coordinates.[6]

When the functions $g_1(\varphi)$ and $g_2(\varphi)$ are known, the correspondence of θ and φ is immediately known along the boundary contours since $g(\varphi)=\theta-\varphi$. Also, the functions $f_1(\varphi)$ and $f_2(\varphi)$ together with the constants σ_1 and σ_2 determine[7] the functions $\mu_1(\varphi)$ and $\mu_2(\varphi)$. The quantities μ_1 and μ_2 expressed as functions of $\theta(=-\lambda)$ then permit the defining of two contours in the u plane, the external region of which is in one-to-one correspondence with the ring region. Some specific examples will shortly be given. With an insight gained by experience, the functions $\mu_1(\varphi)$ and $\mu_2(\varphi)$ may be so chosen that certain desired classes of practical biplane arrangements may be obtained. It may be remarked here that once there is obtained a definite biplane arrangement by means of this process, the problem may immediately be considered reversed and thus insight is obtained into the solution of the associated integral equation. This notion will be later examined; in this section, some illustrations of the afore-mentioned process are briefly presented.

[6] There is an additional condition on $g_1(\varphi)$ or $g_2(\varphi)$ necessary in order that the contours shall be free of double points (cf. reference 1, p. 10), viz,

$$-1\leq\frac{dg_1}{d\varphi}\leq\infty,\ -1\leq\frac{dg_2}{d\varphi}\leq\infty$$

[7] It is understood that the minor equation (31) is to be satisfied.

By reference to the Fourier series developments for $f_1(\varphi)$ and $f_2(\varphi)$, equations (10) and (12), it may be observed that a particularly simple example is the following:

$$f_1(\varphi)=\mu_1(\varphi)-\sigma_1=A_0-0.1\sin\varphi$$
$$=A_0-(B_1R_1-B_{-1}R_1^{-1})\sin\varphi \qquad (36a)$$

$$f_2(\varphi)=\mu_2(\varphi)-\sigma_2=A_0+0.1\sin\varphi$$
$$=A_0-(B_1R_2-B_{-1}R_2^{-1})\sin\varphi \qquad (36b)$$

Also let $\sigma_1=\frac{\pi}{2}-0.1=1.4708$, and let $\sigma_2=-1.4708$. (Hence $\tau=\sigma_1-\sigma_2=2(1.4708)$ and $2\omega_2=2i\tau=5.8832i$.)

By equations (11) and (13), there may be written for $g_1(\varphi)$ and $g_2(\varphi)$

$$g_1(\varphi)=(\theta-\varphi)_1=B_0+(B_1R_1+B_{-1}R_1^{-1})\cos\varphi$$

$$g_2(\varphi)=(\theta-\varphi)_2=B_0+(B_1R_2+B_{-1}R_2^{-1})\cos\varphi$$

The conditions on A_0 and B_0, equations (32) and (33), give $A_0=0$; $B_1=B_{-1}=\frac{0.1}{2}\operatorname{csch}\frac{\tau}{2}$ (cf. equation (16)), hence $B_0=-2B_1$. (Also, note that for this example, equations (34) and (35) give $p=q=0$, i. e., $\left[\frac{dw}{dz}\right]_{z=c}=re^{i\xi}=1$). Then,

$$g_1(\varphi)=-0.1\operatorname{csch}\frac{\tau}{2}+0.1\coth\frac{\tau}{2}\cos\varphi=g_2(\varphi)$$

or finally,

$$\mu_1(\varphi)=1.4708-0.1\sin\varphi=-\mu_2(\varphi)$$

$$g_1(\varphi)=-0.04851+0.11114\cos\varphi=g_2(\varphi)$$

It is now possible to define the variable $\theta=\varphi+g(\varphi)$ along each contour:

$$\theta_1=-\lambda_1=\varphi+g_1(\varphi)$$

$$\theta_2=-\lambda_2=\varphi+g_2(\varphi)$$

In addition to the choice of f_1 and f_2, the line segments, or chords, and their relative positions (determined by α, β, γ, and δ) about which the biplane contours will be generated may be chosen. (See fig. 5.) Choose $\delta=0$ and $\alpha=\beta=\frac{\pi}{2}$ (hence $2\omega'=2\pi i$). The rectangular Cartesian coordinates of the biplane contours are now given by equation (2.29). Figure 6 shows the arrangements obtained in this numerical case for a number of values of the angle of stagger γ.

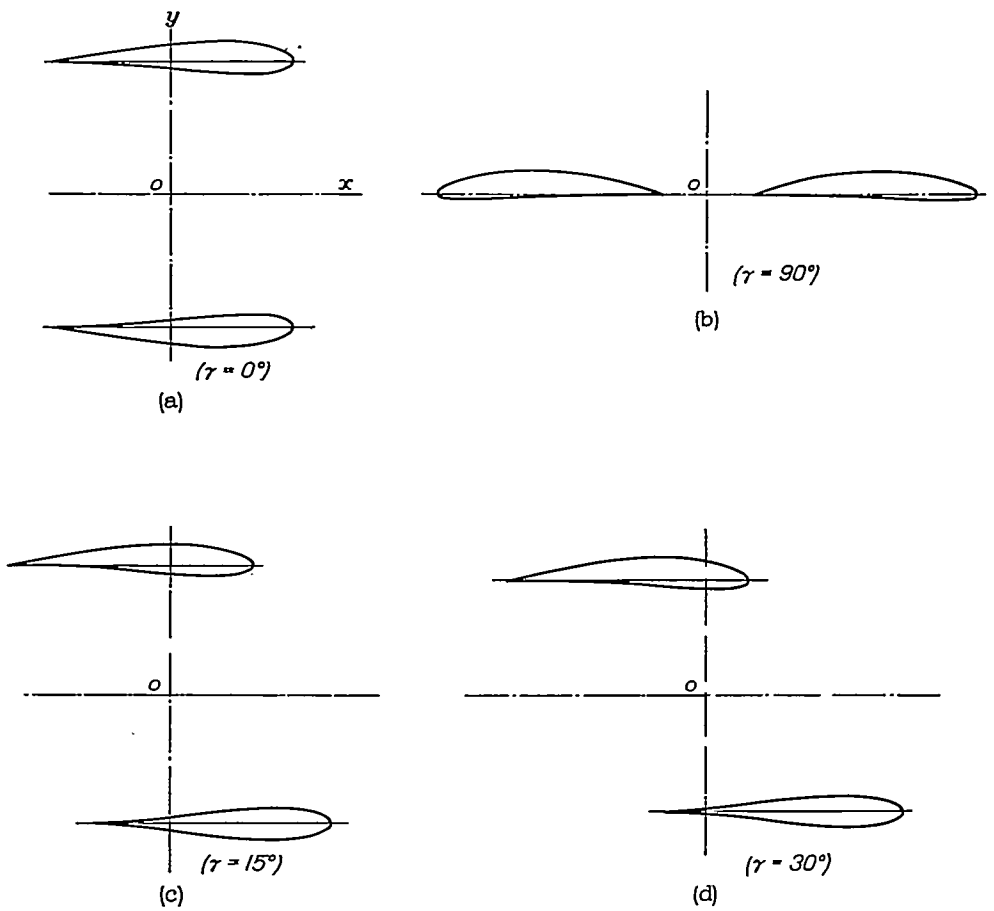

FIGURE 6.—Biplane arrangements defined by special choice of f_1 and f_2 and other parameters. (See equations (36a) and (36b).)

In the elementary example just described the profiles for zero stagger are mirror images (fig. 6 (a)). A simple numerical case for which this is not true is given by

$$f_1(\varphi)=\mu_1(\varphi)-\sigma_1=A_0-0.1\sin(\varphi+30°) \qquad (37a)$$

$$f_2(\varphi)=\mu_2(\varphi)-\sigma_2=A_0+0.1\sin(\varphi-30°) \qquad (37b)$$

Here, also, choose $\alpha=\beta=\frac{\pi}{2}$, $\sigma_1=-\sigma_2=1.4708$. Then

$$g_1(\varphi)=(\theta-\varphi)_1=B_0+0.09625\cos\varphi-0.0450\sin\varphi$$

$$g_2(\varphi)=(\theta-\varphi)_2=B_0+0.09625\cos\varphi+0.0450\sin\varphi$$

The constants A_0 and B_0 determined by equations (32) and (33) are

$$A_0=0.0216,\ B_0=-0.0420$$

$$\text{(Again, in this example } \left[\frac{dw}{dz}\right]_{z=c}=re^{i\xi}=1.\text{)}$$

Forming θ_1 and θ_2, the rectangular coordinates of the contours are obtained as was shown in the preceding example. Figure 7 shows some arrangements for various values of the angle of stagger γ. Figure 7 (f) shows the arrangement obtained (for $\gamma=0$, cf. fig. 7 (a)) when an angle of decalage $\delta/2=-3°$ is further introduced in this numerical example.

In this manner, by employing appropriate values for $f_1(\varphi)$ and $f_2(\varphi)$ (or $g_1(\varphi)$ and $g_2(\varphi)$) and for the other parameters involved, it is possible readily to develop arrangements of a great variety of contour shapes, gap/chord values, chord ratios, stagger, and decalage. Indeed, if the process is considered in the light of a boundary-value problem of the concentric ring region, it is seen that it is sufficiently general to yield any biplane arrangement (more generally, any doubly connected region).

Equations (23) and (24) as integral equations.—It is desirable at this point to introduce the following notation. Frequent use will be made of subscripts. The first subscript will usually be 1 or 2 and will indicate that the designated quantity is to be evaluated at the boundary C_1 or C_2, respectively (or also B_1 and B_2, respectively). A second subscript will sometimes be employed to denote the variable in terms of which the quantity is expressed. Thus $\mu_{1,\theta}$ represents the quantity μ evaluated around C_1 (or B_1) expressed as a function of θ; also, $\mu_{2,\varphi}$ denotes the quantity μ evaluated on C_2 expressed as a function of φ.

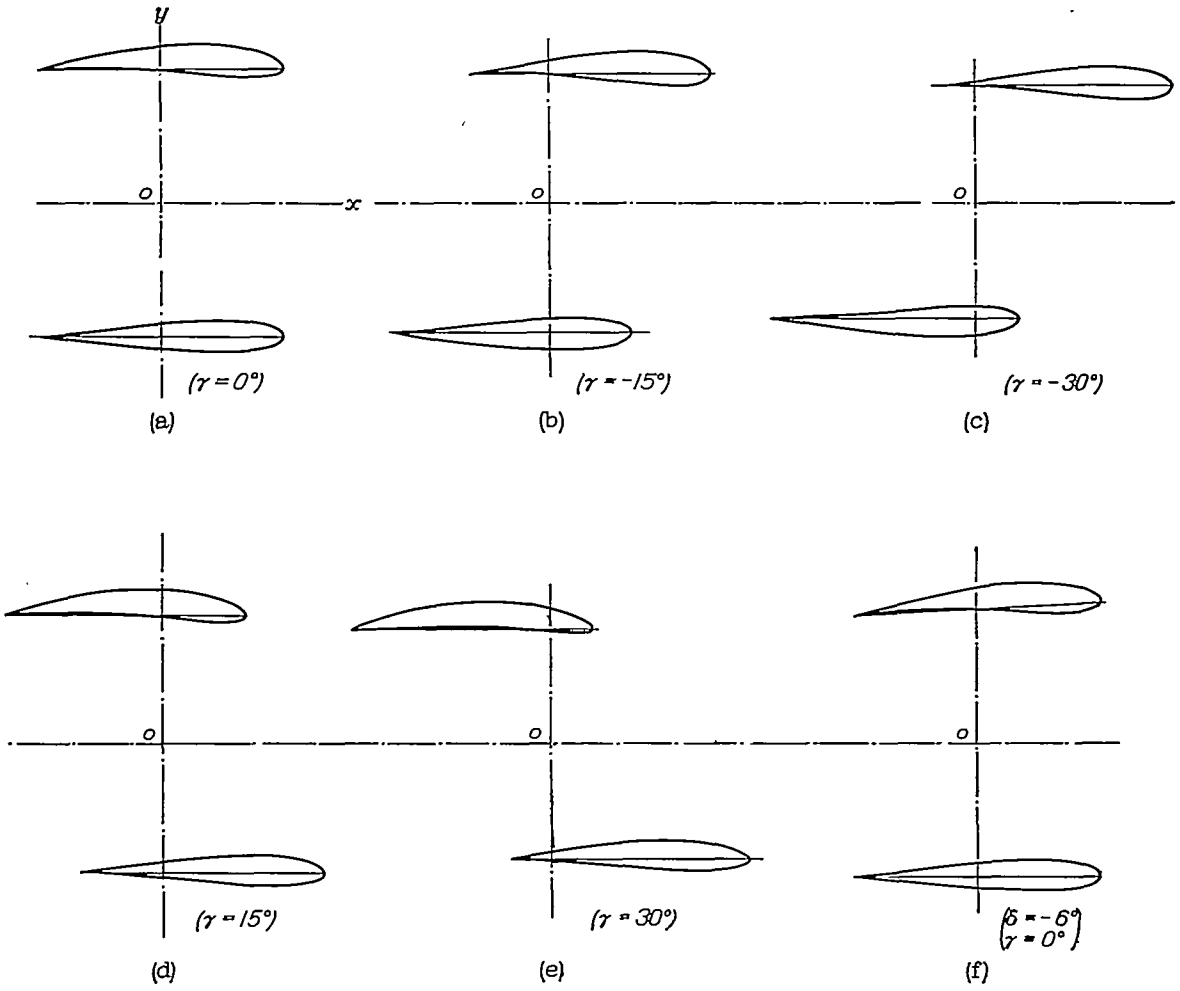

FIGURE 7.—Biplane arrangements defined by special choice of f_1 and f_2 and other parameters. (See equations (37a) and (37b).)

It is recalled that by equations (7) and (8)

$$f_{1,\varphi}=\mu_{1,\varphi}-\sigma_1$$
$$f_{2,\varphi}=\mu_{2,\varphi}-\sigma_2$$

or f_1 and μ_1, and f_2 and μ_2 differ by constants. Then in the integrands of equations (23) and (24) the functions f_1 and f_2 may be replaced by μ_1 and μ_2, since the

additive constants do not contribute to the integrals. If a definite biplane arrangement is preassigned or, what is essentially the same, if there is given a definite nearly circular annular region (in a w plane; $w=ce^{\mu+i\theta}$), it is the functions $\mu_{1,\theta}$ and $\mu_{2,\theta}$ that may be considered directly defined or known.[8] Thus, from an initial knowledge of $\mu_{1,\theta}$ and $\mu_{2,\theta}$ and with the aid of equations (23) and (24), it is desired to obtain a knowledge of the functions $\mu_{1,\varphi}$ and $\mu_{2,\varphi}$. From this point of view the expressions (23) and (24) then represent a pair of simultaneous integral equations, whose process of solution is more intricate than that involved in the process of evaluating the definite integrals. The problem may be restated more precisely:

Given two functions $\mu_{1,\theta}$ and $\mu_{2,\theta}$ that define two continuous contours of an annular region with respect to an origin contained by both contours. Then two pairs of functions $\mu_{1,\varphi}$ and $g_{1,\varphi}$, and $\mu_{2,\varphi}$ and $g_{2,\varphi}$ are to be obtained such that they are interrelated in the manner shown by the interchange of coefficients in the Fourier expansions, equations (10) to (13), which also satisfy certain local specified conditions at $z=c$ (equation (31)), and for which the relations $g_1=(\theta-\varphi)_1$, $g_2=(\theta-\varphi)_2$, which permit an interchange of the arguments θ and φ on each boundary, are *consistent* with the given functions $\mu_{1,\theta}$ and $\mu_{2,\theta}$; that is to say, when $\mu_{1,\varphi}$ is expressed as a function of θ by means of the function $g_{1,\varphi}$ there results the original function $\mu_{1,\theta}$; in symbols

$$\mu_{1,\varphi}\equiv\mu_{1,\theta}$$
$$\text{when } \theta=\varphi+g_{1,\varphi} \text{ or } \varphi=\theta-g_{1,\theta}$$

and similarly

$$\mu_{2,\varphi}\equiv\mu_{2,\theta}$$
$$\text{when } \theta=\varphi+g_{2,\varphi} \text{ or } \varphi=\theta-g_{2,\theta}$$

The process employed in this paper to obtain the desired solution of the simultaneous integral equations is one of successive approximations or iteration. The degree of convergence of most methods of successive approximations usually depends on how good the initial approximation is. In this regard it is rather fortunate that the contours of practically any biplane arrangement transform, under the transformations already developed (with proper choice of coordinates), into nearly circular contours in the w plane. The nearness of these boundary contours to circular contours is very significant and enables the initial approximations to be so chosen that the process converges ordinarily with great rapidity, one step in the process being sufficient for most practical purposes.

Outline of the method of successive approximations.—The various steps in the process of successive approximations will be written down schematically. (Allowing for a difference of notation the process is essentially similar to that employed in reference 1.)

[8] The process of forming $\mu_{1,\theta}$ and $\mu_{2,\theta}$, assuming as known only the rectangular coordinates of the biplane contours, is outlined in section 4, p. 66.

An extension in the use of subsequent notation must first be noted. The symbol $f_{1,\theta}$ represents, as mentioned previously, the function f evaluated on C_1 and expressed as a function of θ. The symbol $f_{1.k,\theta}$ shall now be employed to denote the value of f_1 as given in the kth step in the process of successive approximations, expressed as a function of θ. Thus the symbol $g_{2.4,\varphi_{2.3}}$ denotes the value of g_2 given by the fourth step in the process, expressed as a function of φ_2 as given by the third step in the process.

We start with the two functions $\mu_{1,\theta}$ and $\mu_{2,\theta}$ that define the contours B_1 and B_2 completely. Employing θ instead of φ in the integrals,[9] equations (32′) define the constants $\sigma_{1.1}$ and $\sigma_{2.1}$ and equation (33′) determines the constant $B_{0.1}$. The simultaneous equations (23) and (24) then determine completely the functions $g_{1.1,\theta}$ and $g_{2.1,\theta}$ as follows:

$$\left.\begin{aligned}\varphi_{1.1}&=\theta-g_{1.1,\theta}\\ \varphi_{2.1}&=\theta-g_{2.1,\theta}\end{aligned}\right\}\qquad(38a)$$

The values $\mu_{1,\varphi_{1.1}}$ and $\mu_{2,\varphi_{2.1}}$ may now be defined and these functions may be considered as known. Employing $\varphi_{1.1}$ and $\varphi_{2.1}$ as variables instead of φ, equations (32′) and (33′) determine $\sigma_{1.2}$, $\sigma_{2.2}$, and $B_{0.2}$. Equations (23) and (24) determine then the functions $g_{1.2,\varphi_{1.1}}$ and $g_{2.2,\varphi_{2.1}}$, which may be expressed as functions of θ in view of equation (38a). The variables $\varphi_{1.2}$ and $\varphi_{2.2}$ are now given by

$$\left.\begin{aligned}\varphi_{1.2}&=\theta-g_{1.2,\theta}\\ \varphi_{2.2}&=\theta-g_{2.2,\theta}\end{aligned}\right\}\qquad(38b)$$

The functions $\mu_{1,\varphi_{1.2}}$ and $\mu_{2,\varphi_{2.2}}$ are now determined and the process may be continued as outlined for $\mu_{1,\varphi_{1.1}}$ and $\mu_{2,\varphi_{2.1}}$. It is noteworthy that this process converges, in practice, with extreme rapidity, that is to say, the functions $\mu_{1,\varphi_{1.k}}$ and $\mu_{2,\varphi_{2.k}}$ approach identity with $\mu_{1,\varphi_{1.k+1}}$ and $\mu_{2,\varphi_{2.k+1}}$ for small values of k. Experience has shown (cf. also reference 1) that in ordinary cases one, or at most two, steps in the process are sufficient for great accuracy. It must be noted, however, that a completely rigorous discussion of the convergence process is lacking.

In order to illustrate the method, consider the biplane arrangements of figure 7 defined by the functions in equations (37a) and (37b). Forgetting for the moment that the various functions are known, assume only $\mu_{1,\theta}$ and $\mu_{2,\theta}$ to be given and attempt to obtain $\mu_{1,\varphi}$ and $\mu_{2,\varphi}$. Figure 8 shows the various functions described. It is seen that the set of curves $g_{1,\varphi_{1.1}}$, $g_{2.\varphi_{2.1}}$, $\mu_{1,\varphi_{1.1}}$, and $\mu_{2,\varphi_{2.1}}$ (obtained by a 20-point numerical process similar to that sketched in

[9] Denoting the initial approximation by a zero subscript, observe that the initial approximation employed here is $\varphi_{1,0}=\theta-g_{1,0}$ and $\varphi_{2,0}=\theta-g_{2,0}$ where $g_{1,0}=g_{2,0}=0$. More generally, the initial transformation may be better defined where $g_{1,0}$ and $g_{2,0}$ are arbitrary functions, so chosen that they are better approximations to the final solutions g_1 and g_2. Then employing $\varphi_{1,0}$ and $\varphi_{2,0}$ as variables instead of θ the functions $\mu_{1.1,\varphi_{1.0}}$ and $\mu_{2.1,\varphi_{2.0}}$ may be defined from which $g_{1,1}$ and $g_{2,1}$ are determined and the process continued as outlined. (Cf. reference 1, p. 13.)

the appendix of reference 1) are completely coincident with the known solutions $g_{1,\varphi}$, $g_{2,\varphi}$, $\mu_{1,\varphi}$, and $\mu_{2,\varphi}$. A further application of the process can cause no further noticeable change.

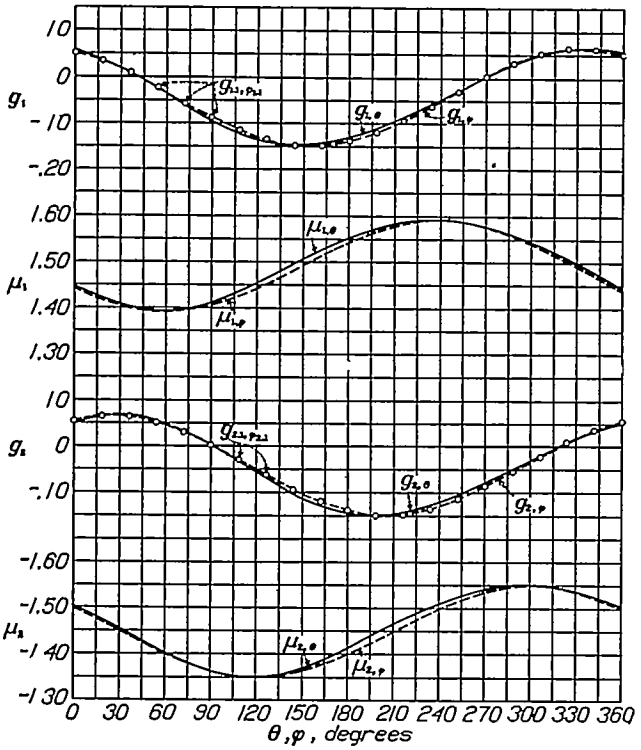

FIGURE 8.—Illustrating the process of successive approximations.

For future reference, the derivative expression $\frac{dw}{dz}$ evaluated at the boundary circles will be required. From equation (30)

$$\frac{dw}{dz}=\frac{w}{z}\left(1+z\frac{dh(z)}{dz}\right)$$

On C_1

$$h(z)=f_{1,\varphi}+ig_{1,\varphi}$$

Then

$$\left.\frac{dw}{dz}\right]_{C_1}=\left|\frac{w}{z}\right|_{C_1}\cdot\left[\left(1+\frac{dg_{1,\varphi}}{d\varphi}\right)-i\frac{df_{1,\varphi}}{d\varphi}\right] \tag{39}$$

Observing that $d\varphi=d(\theta-g)$ this may also be expressed

$$\left.\frac{dw}{dz}\right]_{C_1}=\left|\frac{w}{z}\right|_{C_1}\left(\frac{1-i\frac{df_{1,\theta}}{d\theta}}{1-\frac{dg_{1,\theta}}{d\theta}}\right) \tag{39'}$$

For the boundary C_2, the subscript 1 is replaced by 2.

4. GENERAL MONOPLANE WING SECTION THEORY—A DEGENERATE CASE OF THE BIPLANE ANALYSIS

It may be of some interest to discuss in this section briefly the case of the single airfoil section considered as a special case of the biplane analysis. A biplane arrangement in a two-dimensional field of flow corresponds mathematically to a doubly connected region. The degenerate case in which one of the biplane contours reduces to a (regular) point leads to the monoplane-wing profile the external region of which is simply connected.[10] It should therefore be possible to obtain the complete theory of monoplane wing sections in potential flow as limiting values of the formulas already developed for biplane wing sections, as will be outlined in the present section. Conversely, the monoplane case is of further significance in that it permits a more complete understanding of the biplane analysis and, too, considerably simplifies the practical evaluations. The numerical process employed in the monoplane case, it will appear, needs to be modified in a relatively minor way to yield the results for ordinary biplane combinations. Indeed, according to a method outlined by Koebe (reference 2), it is known that even the more general problem of transforming a multiply connected region (multiplane problem) into a region bounded by circles may be resolved by a process of successive approximations employing only the separate cases for the simply connected regions. The details of this problem remain for a future investigation; it is mentioned here merely as a further possible application of the degenerate case.

It may first be observed that as one of the circles in the t plane reduces to a point the value of α or β (according as the upper or lower circle degenerates) becomes infinite. Hence in the degenerate case, the elliptic functions introduced in the analysis become circular functions having a real period $2\omega=2\pi$ and an imaginary period $2\omega'$, which is infinite. From equation (2.23) it is clear that $\omega'=i\infty$ corresponds to $q=0$ and that

$$\lim_{q=0} A(s)=\frac{1}{2}\cot\frac{\delta}{2}+\frac{1}{2}\cot\frac{s}{2} \tag{1}$$

Let $\beta=\infty$, then employing this equation and relation (1.8) it is found that equation (2.12) becomes

$$\lim_{q=0} u(s)\, e^{i\delta/2}=U_1=T_1+\frac{a^2}{T_1} \tag{2}$$

where the origin in the U_1 plane is referred to the midpoint of the line segment and where

$$T_1=e^{i(\gamma+\delta/2)}(t-ic\coth\alpha)$$

$$a=c\operatorname{csch}\alpha$$

It is seen that the T_1 plane corresponds simply to the t plane translated to a new origin (O_1 in fig. 1) and rotated by an angle $\gamma'=\gamma+\frac{\delta}{2}$. Equation (2) is nothing more than the well-known transformation leading to Joukowsky airfoils. The line segment in this case ($\beta=\infty$) is equal to twice the diameter of the circle in the T_1 plane, i. e., $c_1=4a$.

[10] Strictly speaking, the point at infinity represents another boundary and the *flow* regions are respectively, triply connected and doubly connected. This fact corresponds to the circumstance that in the flow formula for the biplane case there may be two arbitrary circulations specified, and in the monoplane flow formula, one. The flow formula for a simply connected region without singular points cannot be multiply valued, i. e., cannot possess an arbitrary circulation.

If α instead of β, is allowed to approach infinity there is obtained

$$\lim_{\alpha=\infty} u(s)=U_2=T_2+\frac{b^2}{T_2}$$

where the origin in the U_2 plane is referred to the midpoint of the line segment, and where

$$T_2=e^{i\gamma}(t+ic \coth \beta)$$
$$b=c \operatorname{csch} \beta$$

The chord length $c_2=4b$.

In what immediately follows we show how to express λ, μ in the degenerate case in terms of the coordinates x, y of the airfoil section. These results will be of value in the later determination of λ, μ from x, y for the biplane case.

It has been seen that in the degenerate case ($\beta=\infty$) the origin of coordinates may be referred to the midpoint of the chord and

$$U_1=T_1+\frac{a^2}{T_1} \tag{2}$$

where the rectangular coordinates in the U_1 plane are (x_1,y_1) i. e.,

$$U_1=x_1+iy_1$$
$$T_1=e^{i\gamma'}(t-ic \coth \alpha)$$
$$a=c \operatorname{csch} \alpha \text{ and } \gamma'=\gamma+\delta/2$$

Let T_1 be written in the form

$$T_1=ae^{\psi_1+i\theta_1} \tag{3}$$

Then

$$U_1=x_1+iy_1=2a \cosh (\psi_1+i\theta_1) \tag{4}$$

where

$$x_1=2a \cosh \psi_1 \cos \theta_1$$
$$y_1=2a \sinh \psi_1 \sin \theta_1$$

And upon inversion (cf. reference 1)

$$\left.\begin{aligned} 2 \sin^2 \theta_1&=p+\sqrt{p^2+\frac{y^2}{a^2}} \\ 2 \sinh^2 \psi_1&=-p+\sqrt{p^2+\frac{y^2}{a^2}} \end{aligned}\right\} \tag{5}$$

where

$$p=1-\left(\frac{x}{2a}\right)^2-\left(\frac{y}{2a}\right)^2$$

By equation (1.8)

$$t=-c \cot \frac{s}{2} \text{ where } s=\lambda+i\mu$$

Hence,

$$\lambda+i\mu=-2 \cot^{-1}\frac{t}{c}=-2 \cot^{-1}(T_1e^{-i\gamma'}+ic \coth \alpha)\frac{1}{c}$$

or also

$$\lambda+i\mu=-2 \cot^{-1} (l+im) \tag{6}$$

where

$$l=\frac{a}{c}e^{\psi_1} \cos (\theta_1-\gamma')$$

$$m=\frac{a}{c}(e^{\psi_1} \sin (\theta_1-\gamma')+\cosh \alpha)$$

It is known that

$$\cot^{-1}(l+im)=-\frac{i}{2} \log \frac{l+im+i}{l+im-i}$$
$$=-i\frac{1}{4} \log \frac{(l^2+m^2-1)^2+4l^2}{[l^2+(m-1)^2]^2}+\frac{1}{2} \tan^{-1}\frac{2l}{l^2+m^2-1}$$

So that finally equation (6) separates into

$$\left.\begin{aligned} \lambda&=-\tan^{-1}\frac{2l}{l^2+m^2-1} \\ \mu&=\frac{1}{2} \log \frac{(l^2+m^2-1)^2+4l^2}{[l^2+(m-1)^2]^2} \end{aligned}\right\} \tag{7}$$

These relations express λ and μ in the monoplane case in terms of θ_1 and ψ_1 and hence by (5) also in terms of x_1 and y_1.

Similarly, in order to obtain λ and μ for the degenerate case in which $\alpha=\infty$, replace a by b ($=c \operatorname{csch} \beta$) and let

$$\begin{aligned} T_2&=e^{i\gamma} (t+ic \coth \beta) \\ &=be^{\psi_2+i\theta_2} \end{aligned} \tag{3'}$$

Then finally λ and μ are given by equation (7) in which

$$\left.\begin{aligned} l=\ l_2&=\frac{b}{c}e^{\psi_2} \cos (\theta_2-\gamma) \\ m=m_2&=\frac{b}{c}\left(e^{\psi_2} \sin (\theta_2-\gamma)-\cosh \beta\right) \end{aligned}\right\} \tag{6'}$$

Inversion of equation (2.12).—It is quite evident that the direct inversion of the elliptic transcendental equation (2.12) (p. 52), if at all possible, would be very laborious. However, an indirect method which employs the results of the degenerate cases and which performs this inversion readily, to any degree of approximation, will now be outlined.

Thus, let a definite biplane arrangement be given (fig. 5(a)). The chords or line segments c_1 and c_2 may first be chosen in the following *convenient* manner. Let the chord c_1 be defined by the line F_1F_1', where F_1 is the midpoint of the distance between the leading edge and the center of curvature of the leading edge and F_1' is the midpoint of the distance between the trailing edge and the center of curvature of the trailing edge. It is observed at this point that the only *theoretical* restriction upon the choice of the chords is that the singular points (the end points of the line segments) be within the contours, or, at most, on the boundaries themselves. The above-mentioned choice is one merely of convenience, the object in view being the defining of a smooth (λ, μ) relationship. (In reference 1, a similar situation is described in detail.) The above-outlined procedure may be also applied to determine the chord c_2 of the lower contour of the biplane cellule.[11]

[11] In the event that the chords so determined are almost, but not quite, parallel it is of some advantage numerically to vary from the foregoing procedure sufficiently to cause the chords to become exactly parallel and to maintain approximately the foci F and F'. Small variations from the choice of chords outlined are of minor importance and will not affect the smoothness of the (λ, μ) relationship. The desirability of maintaining the chords exactly parallel, if they are reasonably parallel to start with, is due to the circumstance that elliptic functions of the second kind are then avoided.

The chords c_1 and c_2 having been conveniently chosen, it is possible to determine uniquely by means of the charts outlined previously (fig. 4), or indirectly from the equations themselves, the values of the constants α, β, γ, and δ. The quantity c may be regarded throughout as a convenient unit reference length.

Equation (7), it will be recalled, for these values of α, β, γ, and δ, determines the values of λ and μ (in terms of the rectangular coordinates of the profile sections), which in the degenerate cases correspond to profiles geometrically similar to the upper or lower profiles of the given biplane cellule, the only differences being that the chords are $4a=4c \operatorname{csch} \alpha$ and $4b=4c \operatorname{csch} \beta$, respectively. When, however, the values of λ and μ thus determined are inserted in equation (2.29) (employing the proper periods $2\omega=2\pi$, $2\omega'=2i(\alpha+\beta)$) there is obtained a biplane arrangement which has, necessarily, the required chords and position (i. e., the proper skeleton) and around this skeleton has generated contour shapes A_1 and B_1 which, in ordinary cases, are almost identical with the given original contours A_0 and B_0. Thus, the use of the values (λ, μ) of the degenerate cases in the *biplane* analysis is equivalent to a replacement of the original biplane arrangement by a new arrangement defined by the contours A_1 and B_1. The differences between A_0 and A_1, and B_0 and B_1 are remarkably small in practice. Mathematically the foregoing procedure represents, however, only a first, although important, step in a process of successive approximations which we outline as follows.

Consider only A_0 and A_1. The contour A_1 defines, by means of equation (7), a new degenerate (λ, μ) relation. The differences between this new (λ, μ) relation of A_1 and the original degenerate (λ, μ) relation of A_0 is a proper criterion of the differences between the contours A_0 and A_1 themselves since, if these (λ, μ) functions coincide, the contours must coincide. Hence, by a shifting process similar to that commonly employed in methods of successive approximations, the first approximation to the desired (λ, μ) relation of A_0 (this first approximation has been here considered to be the degenerate (λ, μ) relation itself of A_0) may be corrected by these differences to give a second and better approximation. The process may be repeated k times, if necessary, until the degenerate (λ, μ) relation of A_k coincides with the degenerate (λ, μ) relation of A_0, hence A_k coincides with A_0, and therefore the actual (λ, μ) relation that defines the contour A_k itself in the biplane case (i. e., by equation (2.29)) is the desired (λ, μ) relation of A_0.

Singular points in the monoplane case.—The monoplane case may also be useful in obtaining the singular points of the biplane transformation to a good first approximation. From equation (2):

$$U_1=T_1+\frac{a^2}{T_1}$$

the singular points are given by

$$\frac{dU_1}{dT_1}=0=1-\frac{a^2}{T_1^2}$$

or by

$$T_1 \pm a$$

Since by equation (3)

$$T_1=ae^{\psi_1+i\theta_1}$$

it is evident that the singular points correspond to $(\psi_1, \theta_1)=(0, 0)$ and $(0, \pi)$, respectively. On replacing ψ_1 and θ_1 in equations (6) and (7) by these values it is seen that the singular points $(\lambda=\lambda_s)$ of the upper chord $(\mu=\alpha)$ are given by

$$-\tan \lambda_s=\frac{\sinh \alpha \cos \gamma'}{1 \pm \cosh \alpha \sin \gamma'} \tag{8}$$

Similarly for the chord of the lower profile $(\mu=-\beta)$ we get

$$\tan \lambda_s=\frac{\sinh \beta \cos \gamma}{1 \pm \cosh \beta \sin \gamma} \tag{8'}$$

It may also be useful to note that to a first approximation (the approximation being better the greater $\alpha+\beta$) the chords of a biplane cellule are given by $c_1=4c \operatorname{csch} \alpha$, $c_2=4c \operatorname{csch} \beta$. Hence the chord ratio is approximately

$$\frac{c_1}{c_2}=\frac{\sinh \beta}{\sinh \alpha}$$

It has been shown thus far that the degenerate monoplane case may be of value in the determination of μ and λ for a biplane cellule. The limiting forms of the simultaneous integral equations will now be briefly discussed.

Forms of the integral equations (3.23) and (3.24) for the monoplane case.—Consider the simultaneous equations (23) and (24) of section 3, which define the distortion of two contours from two circles. Let $\beta'=-\sigma_2=\infty$, i. e., $R_2=0$, the interior circle of figure 5 (e) degenerates to a point. It is seen then that the Laurent series, equation (3.6), becomes a one-way ascending power series and $a_{-n}=A_{-n}+iB_{-n}=0$. We have also since $\tau=\alpha'+\beta'=\infty$ that equations (3.21) and (3.22) give

$$Z(\varphi-\varphi')=0, Z_1(\varphi-\varphi')=\frac{1}{2} \cot \frac{\varphi-\varphi'}{2}$$

Equations (3.23) and (3.24) then reduce to a single equation

$$g_1(\varphi')=B_0-\frac{1}{2\pi}\int_0^{2\pi} f_1(\varphi) \cot \frac{\varphi-\varphi'}{2} d\varphi \tag{9}$$

or also

$$g_1(\varphi')=B_0+\frac{1}{\pi}\int_0^{2\pi} f_1(\varphi) \log \sin \left|\frac{\varphi-\varphi'}{2}\right| d\varphi \tag{9'}$$

Equation (9), considered as an integral equation, enables the transforming of the contour of a simply connected region into a circle. The process of iteration outlined in the preceding section is directly applicable in this simpler case. (Cf. reference 1.) The constants A_0, B_0, and $\sigma_1=\alpha'$ may be determined, as before, from equations (3.32) and (3.33).

In the event that $\alpha'=\infty$, the outer circle of figure 5(e) becomes infinitely large, i. e., $R_1=\infty$. Then the Laurent series (3.6) becomes a descending power series and $a_n=A_n+iB_n=0$. With $f_1=g_1=0$ and $\tau=\infty$ we find that equations (3.23) and (3.24) reduce to

$$g_2(\varphi')=B_0+\frac{1}{2\pi}\int_0^{2\pi} f_2(\varphi)\cot\frac{\varphi-\varphi'}{2}d\varphi \tag{10}$$

or also

$$g_2(\varphi')=B_0-\frac{1}{\pi}\int_0^{2\pi} f_2(\varphi)\log\sin\left|\frac{\varphi-\varphi'}{2}\right| d\varphi \tag{10'}$$

The functions $g_1(\varphi)$ and $g_2(\varphi)$, determined by equations (9) and (10) by separate treatment of the two monoplane cases, may when known be employed as a convenient initial approximation (cf. footnote 9) in the more general case.

The well-known flow function for a single circular cylinder may be brought into combination with the results of this section to yield the flow about an arbitrary single airfoil as has been already obtained in reference 3. We proceed at once to the more general case to introduce the flow function for two circular cylinders into the biplane analysis.

5. POTENTIAL FLOW ABOUT THE BIPLANE CONTOURS

Potential flow around two circles.—It has thus far been shown how the two contours of a biplane arrangement, in a u plane, may be transformed into two concentric circles in the z plane. It is desirable in what follows to transform the concentric circles C_1 and C_2 of the z plane into the coaxial ones K_1' and K_2' in a t' plane (fig. 9). The circles K_1' and K_2' will thus also correspond to the contours of the biplane arrangement and are not to be confused with the contours K_1 and K_2 of the t plane (fig. 5 (d)) which, in general, are not circles. The primes will be retained to denote this difference. The relation between the z and t' planes is (cf. equation (1.4))

$$t'=ic\frac{z+c}{z-c} \tag{1}$$

Also by the relation

$$t'=-c\cot\frac{s'}{2} \tag{2}$$

the region external to the circles K_1' and K_2' is mapped into a rectangular region in the s' plane bounded by the lines l_1' and l_2' (cf. equation (1.8) and fig. 9). For later reference the relation between s' and z is also noted here:

$$z=ce^{-is'} \tag{3}$$

and since $z=ce^{\sigma+i\varphi}$ and $s'=\lambda'+i\mu'$ it is clear that

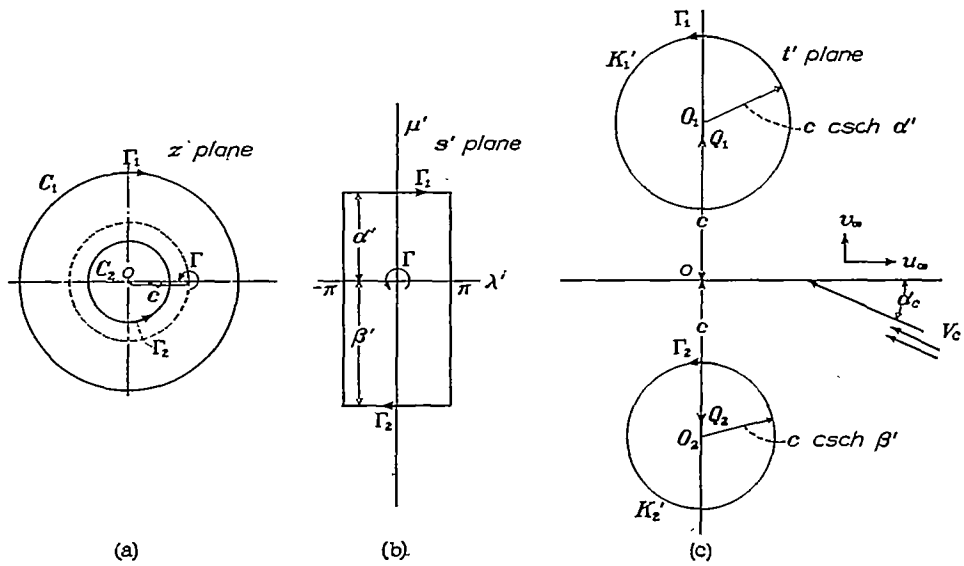

FIGURE 9.—Illustrating the flow regions in the z, s', and t' planes.

$$\left.\begin{aligned}\lambda'&=-\varphi\\ \mu'&=\sigma\end{aligned}\right\} \tag{4}$$

Hence the boundary lines l_1' and l_2' are given respectively by

$$\mu'=\alpha'=\sigma_1,\ \mu'=-\beta'=\sigma_2$$

where

$$\alpha'>0,\ \beta'>0$$

(It will also be recalled from section 3 (cf. line following equation (3.16)) that $\sigma_1-\sigma_2=\alpha'+\beta'=\tau$.)

In a noteworthy paper (reference 4) Lagally has given the complex flow potential for uniform flow past two circles. His formula makes use of the interme-

diate s' plane and the complex flow potential in the s' plane, is given by[12]

$$\Omega(s')=\frac{\Gamma'}{4\pi}s'-\frac{\Gamma}{4\pi}\left[2i\log\frac{\sigma(s')}{\sigma(s'+2i\beta')}+\left(1-\frac{4\beta'\eta_1}{\pi}\right)s'\right]$$
$$-2cu_\infty\left[\zeta(s')+\zeta(s'+2i\beta')-\frac{2}{\pi}\eta_1 s'\right]$$
$$+2icv_\infty[\zeta(s')-\zeta(s'+2i\beta')] \qquad (5)$$

In this equation $\Gamma=-(\Gamma_1+\Gamma_2)$ where Γ_1 and Γ_2 are the individual arbitrary circulations about K_1' and K_2', respectively (see fig. 9; the *positive* direction of Γ_1 or Γ_2, which is opposite to that of Γ, is chosen such that as one traverses the contour in this direction the flow region is on the right). The symbol Γ' denotes the "countercirculation" $\Gamma'=\Gamma_1-\Gamma_2$. The velocity at infinity is $u_\infty+iv_\infty$. The periods of the elliptic functions are, as in section 3, $2\omega_1=2\pi$, $2\omega_2=2i(\alpha'+\beta')=2i\tau$.

Equation (5) shows directly that the whole flow is built up by linear superposition of four separate flows, for each of which one of the quantities Γ, Γ', u_∞, and v_∞ is different from zero.

In the first partial flow with the factor Γ', both circulations are equal and opposite about the two circles, $\Gamma_1=-\Gamma_2=\frac{\Gamma'}{2}$. The streamlines are the circles of the coaxial pencil. The velocity at infinity is zero. In the second partial flow with the factor Γ, the two circulations are equal. $\Gamma_1=\Gamma_2=-\frac{\Gamma}{2}$. The velocity at infinity is again zero. The third partial flow with the factor u_∞ is a translatory flow without circulation, normal to the line of centers of the two circles. The fourth partial flow with the factor v_∞ is a translatory flow without circulation in the direction of the line of centers of the two circles.

The flow at the surface of the two circles, and the determination of Γ and Γ'.—It is convenient to define the velocity at infinity, whose rectangular components are u_∞ and v_∞, in another manner, by introducing a magnitude V_c and an angle of attack α_c (fig. 9 (c)). Let

$$\left.\begin{aligned} u_\infty&=-V_c\cos\alpha_c\\ v_\infty&=V_c\sin\alpha_c\end{aligned}\right\} \qquad (6)$$

or, in a single expression,

$$u_\infty+iv_\infty=-V_c e^{-i\alpha_c}$$

By derivation of equation (5) with regard to s', we obtain the complex velocity function in the s' plane as

$$W(s')=\frac{\Gamma'}{4\pi}-\frac{\Gamma}{4\pi}\left\{2i[\zeta(s')-\zeta(s'+2i\beta')]+1-\frac{4\beta'\eta_1}{\pi}\right\}$$
$$-2cV_c\cos\alpha_c[p(s\ )+p(s'+2i\beta')+2\eta_1/\pi]$$
$$-2icV_c\sin\alpha_c[p(s')-p(s'+2i\beta')] \qquad (7)$$

This expression gives the velocity components U_1-iV_1 at any point of the rectangular region in the s' plane. It is a real quantity on each of the boundaries, $\mu'=\alpha'$, $\mu'=-\beta'$ of the rectangle since these boundaries are streamlines and the normal flow V_1 vanishes.

Let us evaluate W for each of the two cases: (1) $s'=\lambda'+i\alpha'$ corresponding to the boundary l_1' (2) $s'=\lambda'-i\beta'$ corresponding to the boundary l_2'. In case (1) we obtain

$$W_1=\frac{\Gamma'}{4\pi}-\frac{\Gamma}{2\pi}\left\{i[\zeta(\lambda'+i\alpha')-\zeta(\lambda'-i\alpha')]+\frac{2\eta_1\alpha'}{\pi}-\frac{1}{2}\right\}$$
$$-2cV_c\cos\alpha_c[p(\lambda'+i\alpha')+p(\lambda'-i\alpha')+2\eta_1/\pi]$$
$$-2icV_c\sin\alpha_c[p(\lambda'+i\alpha')-p(\lambda'-i\alpha')] \qquad (8)$$

or

$$W_1=\frac{\Gamma'}{4\pi}-\frac{\Gamma}{2\pi}R_1(\lambda',\alpha')-2cV_c\cos\alpha_c R_2(\lambda',\alpha')$$
$$-2cV_c\sin\alpha_c R_3(\lambda',\alpha') \qquad (9)$$

where R_1, R_2, and R_3 are real quantities introduced for brevity in notation and defined by the following equations (the primes are dropped for convenience): [13]

$$R_1(\lambda,\alpha)=i[\zeta(\lambda+i\alpha)-\zeta(\lambda-i\alpha)]+\frac{2\eta_1\alpha}{\pi}-\frac{1}{2} \qquad (10)$$
$$=-\frac{1}{2}+\frac{\sinh\alpha}{\cosh\alpha-\cos\lambda}-4\sum_1^\infty\frac{q^{2m}}{1-q^{2m}}\sinh m\alpha\cos m\lambda$$

[12] Lagally's formula as presented in reference 4 employs elliptic functions of periods $\bar{\omega}_1$ and $\bar{\omega}_2$ which are conjugate to the periods ω_1 and ω_2 employed here, i. e., $\bar{\omega}_1=\omega_2/i$, $\bar{\omega}_2=i\omega_1$. The formula of reference 4 is brought into equation (5) by putting Lagally's symbols iZ, u_∞, v_∞ equal to s', v_∞, $-u_\infty$, respectively.

[13] The developments given here for R_1, R_2, and R_3 are rapidly convergent when $\tau=\alpha'+\beta'$ is large, say greater than $\frac{\pi}{2}$. Other expansions are possible (cf. reference 10, p. 422) and, in certain cases, more desirable. For example, when τ is small, say less than $\frac{\pi}{2}$, it is possible by a simple transformation to interchange the real and imaginary periods of the elliptic functions (cf. footnote 4) and obtain more rapidly convergent developments.

$$R_2(\lambda, \alpha)=p(\lambda+i\alpha)+p(\lambda-i\alpha)+\frac{2\eta_1}{\pi} \tag{11}$$

$$=\frac{1-\cos\lambda\cosh\alpha}{(\cosh\alpha-\cos\lambda)^2}-4\sum_1^\infty\frac{mq^{2m}}{1-q^{2m}}\cosh m\alpha\cos m\lambda$$

$$R_3(\lambda, \alpha)=i[p(\lambda+i\alpha)-p(\lambda-i\alpha)] \tag{12}$$

$$=\frac{\sin\lambda\sinh\alpha}{(\cosh\alpha-\cos\lambda)^2}-4\sum_1^\infty\frac{mq^{2m}}{1-q^{2m}}\sinh m\alpha\sin m\lambda$$

where

$$q=e^{-\tau}$$

In case (2) there is obtained similarly

$$W_2=\frac{\Gamma'}{4\pi}+\frac{\Gamma}{4\pi}R_1(\lambda', \beta')-2cV_c\cos\alpha_c R_2(\lambda', \beta')$$
$$+2cV_c\sin\alpha_c R_3(\lambda', \beta') \tag{13}$$

In order to specify the circulation Γ and the countercirculation Γ', we make use of the Kutta-Joukowsky condition for finite velocities at the sharp trailing edges. Equations (9) and (13) must vanish for the particular values of λ' that correspond to the trailing edges of the upper and lower contours of the biplane combination. Let λ_1' and λ_2' be the values of λ corresponding to the trailing edges of the two contours.[14] Then we have

$$\left.\begin{aligned} W(\lambda_1', \alpha')&=\frac{\Gamma'}{4\pi}-\frac{\Gamma}{2\pi}R_{11}-2cV_c\cos\alpha_c R_{21}\\ &\quad-2cV_c\sin\alpha_c R_{31}=0\\ W(\lambda_2', \beta')&=\frac{\Gamma'}{4\pi}+\frac{\Gamma}{2\pi}R_{12}-2cV_c\cos\alpha_c R_{22}\\ &\quad+2cV_c\sin\alpha_c R_{32}=0\end{aligned}\right\} \tag{14}$$

where the R's with double subscripts are constants defined as follows. (See equations (10)—(12).)

$$R_{11}=R_1(\lambda_1', \alpha'),\ R_{21}=R_2(\lambda_1', \alpha'),\ R_{31}=R_3(\lambda_1', \alpha')$$
$$R_{12}=R_1(\lambda_2', \beta'),\ R_{22}=R_2(\lambda_2', \beta'),\ R_{32}=R_3(\lambda_2', \beta')$$

Solving for $\frac{\Gamma}{2\pi}$ and $\frac{\Gamma'}{4\pi}$ in (14)

$$\left.\begin{aligned}\frac{\Gamma}{2\pi}&=-2cV_c\left[\frac{\cos\alpha_c(R_{21}-R_{22})+\sin\alpha_c(R_{31}+R_{32})}{R_{11}+R_{12}}\right]\\ \frac{\Gamma'}{4\pi}&=2cV_c\left[\frac{\cos\alpha_c(R_{11}R_{22}+R_{21}R_{12})-\sin\alpha_c(R_{11}R_{32}-R_{31}R_{12})}{R_{11}+R_{12}}\right]\end{aligned}\right\} \tag{15}$$

In order to obtain the angle of zero lift β_c, in the plane of the circles, we equate[15] $\Gamma=0$ and solve for the particular value of the angle of attack α_c, which is denoted as $-\beta_c$ (i. e., for $\alpha_c=-\beta_c$, $\Gamma=0$). Then we have at once from (15)

$$\tan\beta_c=\frac{R_{21}-R_{22}}{R_{31}+R_{32}} \tag{16}$$

with this definition of β_c, the total circulation may be expressed as

$$\Gamma=-4\pi cKV_c\sin(\alpha_c+\beta_c) \tag{17}$$

where the constant K is

$$K=\frac{1}{\cos\beta_c}\frac{R_{31}+R_{32}}{R_{11}+R_{12}}$$

(In the limiting cases $\beta'=\infty$, $\alpha'=\infty$, cK is equal to c csch α' or c csch β', respectively, which are the radii of K_1' or K_2', respectively.)

Similarly, the angle γ_c may be defined as the angle of attack for which countercirculation Γ' vanishes (i. e., for $\alpha_c=-\gamma_c$, $\Gamma'=0$.) Then from (15)

$$\tan\gamma_c=-\frac{R_{11}R_{22}+R_{21}R_{12}}{R_{11}R_{32}-R_{31}R_{12}} \tag{18}$$

and Γ' may be expressed as

$$\Gamma'=-8\pi cJV_c\sin(\alpha_c+\gamma_c) \tag{19}$$

where the constant J is

$$J=\frac{1}{\cos\gamma_c}\frac{R_{11}R_{32}-R_{31}R_{12}}{R_{11}+R_{12}}$$

Velocity at the boundary contours of the biplane combination.—Let the complex potential function in the plane containing the biplane contours (u plane) be Ω, then the complex velocity function is

$$\frac{d\Omega}{du}=v_x-iv_y \tag{20}$$

or

$$v=\sqrt{v_x^2+v_y^2}=\left|\frac{d\Omega}{du}\right|$$

where v_x and v_y are the velocity components in the direction of the coordinate axes in the u plane. Introducing the intermediate planes, we have

$$\frac{d\Omega}{du}=\frac{d\Omega}{ds'}\cdot\frac{ds'}{dz}\cdot\frac{dz}{dw}\cdot\frac{dw}{ds}\cdot\frac{ds}{du} \tag{21}$$

It is first of importance to consider the changes that a velocity at infinity in the u plane undergoes when transformed to the t' (or s') planes. (It will be recalled that $u=\infty$ corresponds to $t=\infty$, $s=0$, $w=c$, $z=c$, $s'=0$, $t'=\infty$.) Let $-Ve^{-i\alpha_0}$ denote the velocity at infinity in the u plane and, as before, $-V_ce^{-i\alpha_c}$ denotes the velocity at infinity in the t' plane. (See figs. 9 and 10; the velocity magnitudes are V and V_c and the angles of attack are α_0 and α_c, respectively.)

[14] The values of λ_1' and λ_2' may be determined as follows: Let λ_1 and λ_2 denote the values of $\lambda(=-\theta)$ that correspond to the end points of the *chords*, i. e., λ_1 and λ_2, or $-\theta_1$ and $-\theta_2$, are the singular points of equation (2.12). Then the values of $\lambda'(=-\varphi)$ corresponding to λ_1 and λ_2 are given by λ_1' and λ_2', or $-\varphi_1$ and $-\varphi_2$, where (cf. sec. 3) $\varphi_1=\theta_1-\rho_1.\ \epsilon_1$ and $\varphi_2=\theta_2-\rho_2.\ \epsilon_2$.

[15] The total lift is, as in the monoplane case, $L=\rho V\Gamma$ (cf. p. 25) per unit spanlength.

Then noting equations (2.10) and (3.29) it is found from (21) that

$$\left.\begin{aligned} V_c &= rV \\ \alpha_c &= \alpha_0+\gamma+\xi \end{aligned}\right\} \tag{22}$$

where r and ξ are determined by equation (3.31′) (r is generally near unity, ξ near zero), and γ is the angle of stagger of the biplane chords.

The angle of zero lift for the biplane combination is given by

$$\beta_0=\beta_c+\gamma+\xi$$

i. e., for $\alpha_0=-\beta_0$ the lift vanishes.

In order to determine the velocities at each boundary contour of the biplane combination, it is sufficient to obtain the magnitudes of the individual terms in equation (21) at each boundary. For the upper profile we have by equation (9)

$$\left|\frac{d\Omega}{ds'}\right|=W_1$$

From equation (3)

$$\left|\frac{ds'}{dz}\right|=\left|\frac{1}{z}\right|$$

From equation (3.40) or (3.40′)

$$\left|\frac{dw}{dz}\right|=\left|\frac{w}{z}\right|\left[\left(1+\frac{dg_{1,\varphi}}{d\varphi}\right)^2+\left(\frac{df_{1,\varphi}}{d\varphi}\right)^2\right]^{\frac{1}{2}}$$

or also

$$\left|\frac{dw}{dz}\right|=\left|\frac{w}{z}\right|\frac{\left[\left(1+\frac{df_{1,\theta}}{d\theta}\right)^2\right]^{\frac{1}{2}}}{1-\frac{dg_{1,\theta}}{d\theta}}$$

From equation (1.7)

$$\left|\frac{dw}{ds}\right|=|w|$$

And from equation (2.32)

$$\frac{1}{2c}\left|\frac{du}{ds}\right|=[(P_1\cos\gamma+P_1'\sin\gamma)^2+(Q_1\cos\gamma+Q_1'\sin\gamma)^2]^{\frac{1}{2}}$$

(The subscript 1 in P_1, P_1', Q_1, and Q_1' denotes that the values of (λ, μ) which define the upper contour are to be used.) Hence, finally for the velocity v_1 at any point (x, y) or (λ, μ) of the surface of the upper profile there is obtained

$$v_1=\frac{W_1}{2c}\left[\left(1+\frac{dg_1}{d\varphi}\right)^2+\left(\frac{df_1}{d\varphi}\right)^2\right]^{-\frac{1}{2}}[(P_1\cos\gamma+P_1'\sin\gamma)^2+(Q_1\cos\gamma+Q_1'\sin\gamma)^2]^{-\frac{1}{2}} \tag{23}$$

Similarly for the velocity at each point of the surface of the lower profile

$$v_2=\frac{W_2}{2c}\left[\left(1+\frac{dg_2}{d\varphi}\right)^2+\left(\frac{df_2}{d\varphi}\right)^2\right]^{-\frac{1}{2}}[(P_2\cos\gamma+P_2'\sin\gamma)^2+(Q_2\cos\gamma+Q_2'\sin\gamma)^2]^{-\frac{1}{2}} \tag{24}$$

It may be worth while to point out in résumé of equations (23) and (24) that these relations do contain the necessary parameters for the study of the potential flow in any doubly connected region. It is observed that the uniform stream velocity V and the angle of attack α_0 for the biplane cellule occur only in W_1 or W_2 (equations (9) and (13)) and are related to the velocity V_c and angle of attack α_c for the two circles in the t' plane by equation (22). The circulation Γ and the countercirculation Γ', also occur in W_1 and W_2. These circulations are, in general, arbitrary but may be considered specified or fixed in the case of biplane contours by equations (17) and (19). The parameters α, β, γ, and δ determine the position and attitude of the profile chords, i. e., the gap/chord, chord ratio, stagger, and decalage. The variables λ, μ define the shapes of the contours, having the chosen line segments as chords. The functions f and g furnish the means of transition from the two arbitrary contours to two circular boundaries (i. e., from θ, μ to φ, σ). The parameters α' and β' determine the radii of the circles and are fixed by the local conditions at $z=c$ corresponding to the region at infinity (equation (3.29)).

The local superstream pressure at points of the boundary surfaces, in terms of the dynamic pressure of the uniform stream, is given by

$$\frac{p_1}{q}=1-\left(\frac{v_1}{V}\right)^2,\ \frac{p_2}{q}=1-\left(\frac{v_2}{V}\right)^2 \tag{25}$$

where

$$q=\frac{1}{2}\rho V^2$$

The general formulas can be somewhat simplified in certain special cases. For example, in the case of biplane contours described about parallel segments as chords the parameter $\delta=0$ and, in addition, if the chords are equal, $\alpha=\beta$.

Application may be made of the Blasius formulas for obtaining the *total* lift of the biplane combination. It is readily found that the total lift is, as in the monoplane case given by $L=\rho V\Gamma$ per unit span length, where Γ is the total circulation, and the lift vector L is perpendicular to the direction of the uniform stream V. The total integrated moment as well as the forces on the separate contours may also be developed without regard to the local pressure formula (25) though the expressions are not of particularly simple forms. In

the special case of biplane combinations composed of the framework of the line segments themselves, the formulas for the forces and moments will reduce somewhat. These and further special applications are reserved for the future.

As an example of the application of the formulas presented in this paper the pressure distribution for the biplane cellule shown in figure 10 (N. A. C. A. 4412 airfoil section) is developed. The curves representing the g_1, g_2, μ_1, and μ_2 functions are shown in figure 11. The pressure distribution is given in figure 12 for values of the biplane combination lift coefficient: $C_L=0$, 0.5, 1.0, and 1.5. The pressure distribution for the monoplane case (cf. reference 14) is also presented for comparison. The numerical procedure is outlined under table I.

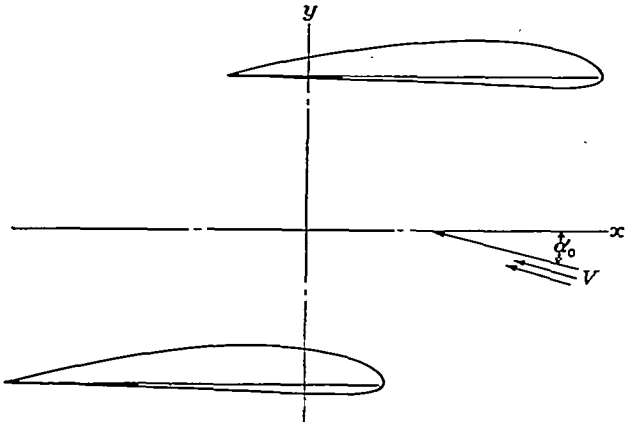

FIGURE 10.—Biplane arrangement (N. A. C. A. 4412 section).

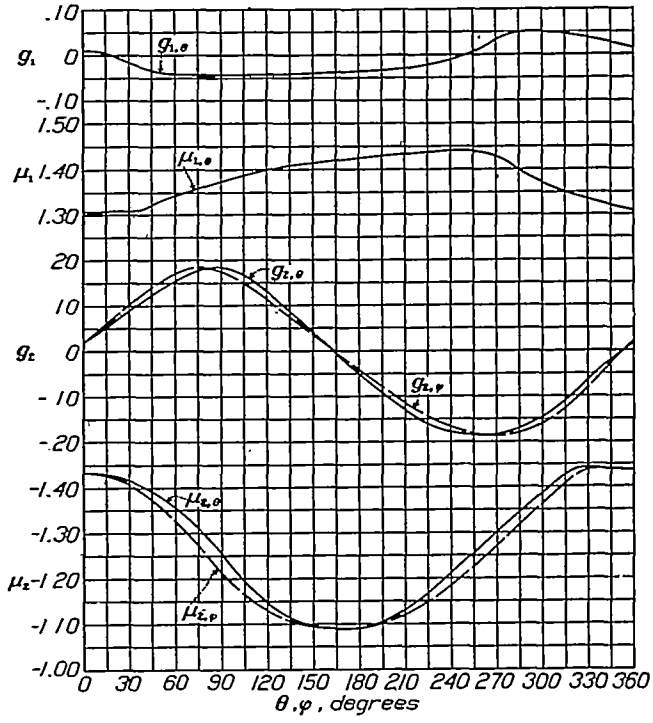

FIGURE 11.—The μ_1, μ_2, g_1, and g_2 functions for the arrangement in figure 10.

LANGLEY MEMORIAL AERONAUTICAL LABORATORY,
NATIONAL ADVISORY COMMITTEE FOR AERONAUTICS,
LANGLEY FIELD, VA., *June 8, 1935.*

REFERENCES

1. Theodorsen, T., and Garrick, I. E.: General Potential Theory of Arbitrary Wing Sections. T. R. No. 452, N. A. C. A., 1933.
2. Koebe, P: Abhandlungen zur Theorie der konformen Abbildung. Journal für die Reine u. Angewandte Mathematik, vol. 145, 1914, p. 223. (Also scattered papers in Mathematischen Annalen, 1909–1912.)
3. Theodorsen, Theodore: Theory of Wing Sections of Arbitrary Shape. T. R. No. 411, N. A. C. A., 1931.
4. Lagally, M.: Die reibungslose Strömung im Aussengebiete zweier Kreise. Zeitschrift für Angewandte Math. u. Mech., vol. 9, no. 4, Aug. 1929, pp. 299–305. (Translated in N. A. C. A., T. M. No. 626.)
5. Dupont, P.: Introduction à l'étude du biplan: intéraction de deux corps non contigus. IV Congresso Int. di Navig. Aerea, Rome, 1927.
6. Bonder: Sul moto di due cilindri in un fluido perfetto. Bollettino della Soc. Politecnica di Varsavia, 1929.
7. Müller, W.: Systeme von Doppelquellen in der ebenen Strömung, insbesondere die Strömung um zwei Kreiszylinder. Z. A. M. M. vol. 9, June 1929, pp. 200–213.
8. Kutta, W. M.: Über ebene Zirkulationsströmungen nebst flugtechnischen Anwendungen. Sitzungsber. der Bayr. Akad. d. Wissensch., München, 1911, p. 65.
9. Ferrari, Carlo: Sulla trasformazione conforme di due cerchi in due profili alari. Memorie della Reale Accad. della Scienze di Torino. June 1930. Serie II, vol. 67, 1930.
10. Halphen, G. H.: Traité des Fonctions Elliptiques et de leurs Applications. Vol. I, Gauthier-Villars, Paris, 1886.
11. Appell, P., and Lacour, E.: Principes de la Théorie des Fonctions Elliptiques et Applications. Gauthier-Villars, Paris, 1922.
12. Wilson, Edwin Bidwell: Advanced Calculus. Ginn and Co., Boston, 1912, p. 468.
13. Villat, Henri: Le problème de Dirichlet dans une aire annulaire. Rendiconti del Circolo Matematico di Palermo, vol. 33, 1912, pp. 134–175.
14. Garrick, I. E.: Determination of the Theoretical Pressure Distribution for Twenty Airfoils. T. R. No. 465, N. A. C. A., 1933.

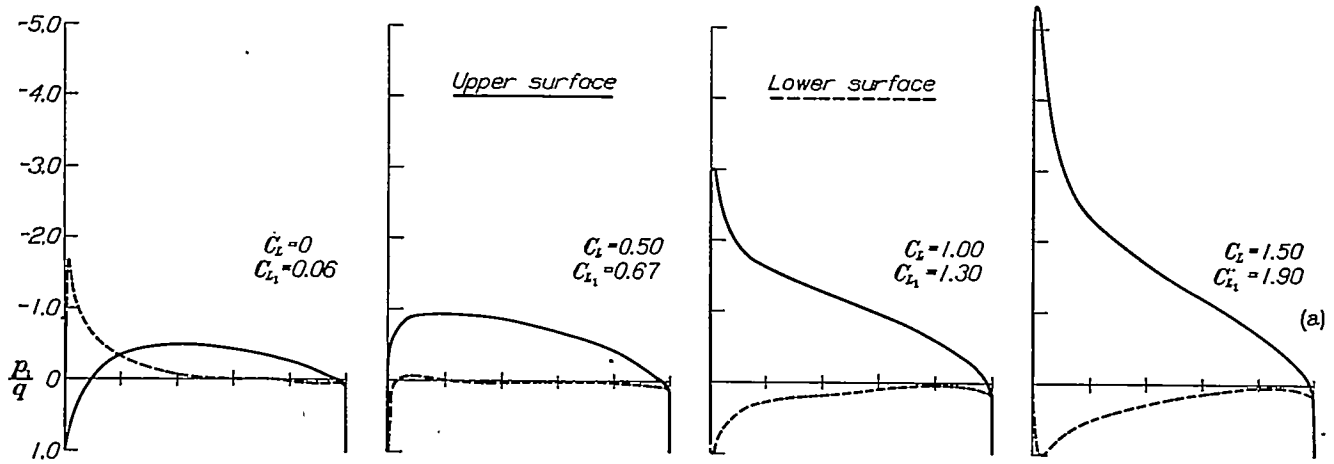

(a) Pressure distribution for the upper wing section of the biplane combination in figure 10.

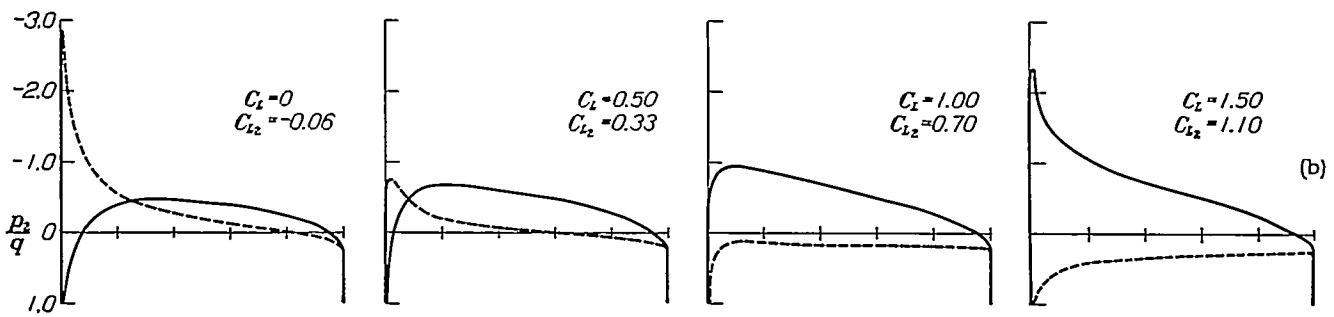

(b) Pressure distribution for the lower wing section of the biplane combination in figure 10.

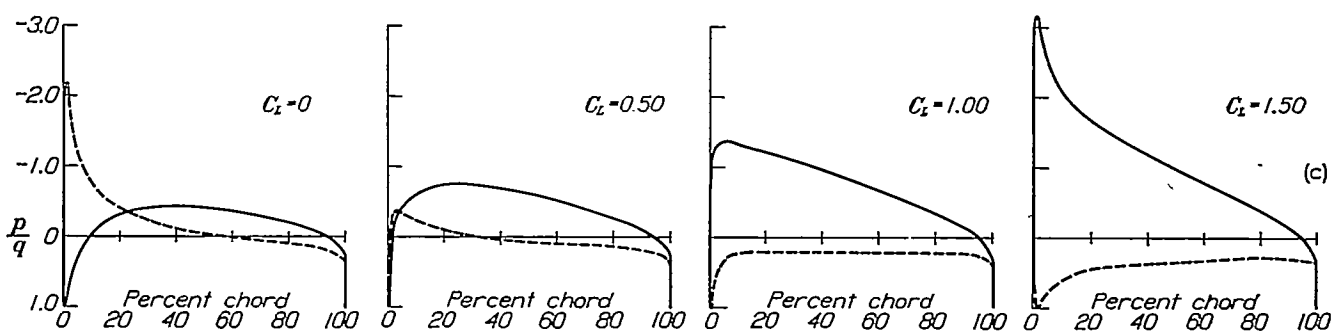

(c) Pressure distribution for the monoplane airfoil section (N. A. C. A. 4412).

FIGURE 12.

EXPLANATION OF TABLE I

Table I presents in outline the numerical procedure in obtaining the velocities and pressures at the boundaries of the biplane combination shown in figure 10. The gap/chord=0.825, stagger/chord=0.580, chord/chord=1, and the decalage=0. The parameters α, β, γ, and δ are: $\alpha=\beta=1.4436$, $\gamma=-30°$, and $\delta=0$. The rectangular coordinates x, y of the profiles are given in columns 1 and 2. (c=unity.) The values of λ, μ which correspond (i. e., satisfy equation (2.29)) are given in columns 3 and 4 and have been calculated by the method outlined in section 4. The constants $A_0=0.0467$, $B_0=-0.0106$, $r=1.025$, $\xi=-0°3'$, $\alpha'=1.333$, $\beta'=1.303$, $\tau=2.636$ and the angular distortion functions g_1 and g_2 (column 5) are determined by the method outlined in section 3. Column 6 presents the angle $\varphi=\theta-g$ where $\theta=-\lambda$. The functions R_1, R_2, and R_3 given in columns 7, 8, and 9 are determined by equations (5.10)—(5.12). Column 10 gives the quantity $h=\left[\left(1+\frac{dg}{d\varphi}\right)^2+\left(\frac{df}{d\varphi}\right)^2\right]^{-\frac{1}{2}}$ for each profile obtained graphically. (See fig. 11.) Column 11 gives the quantity $k=[(P\cos\gamma+P'\sin\gamma)^2+(Q\cos\gamma+Q'\sin\gamma)^2]^{-\frac{1}{2}}$ for each profile. In determining the next column, we require the singular points of the chords as determined by equation (2.22), $\lambda_1=91°49'$, $\lambda_2=40°58'$. Hence $\varphi_1=-93°22'$, $\varphi_2=-35°14'$ (cf. footnote 14). The constants occurring in equation (5.14) are then $R_{11}=0.3444$, $R_{21}=0.2617$, $R_{31}=0.3659$, $R_{12}=0.9431$, $R_{22}=-0.4890$, $R_{32}=0.7117$. Equation (5.16) gives then $\beta_c=34°51'$ and equation (5.17) determines $K=1.020$. The circulation is now $\Gamma=-4\pi cV_c(1.020)\sin(\alpha_c+34°51')$. Equation (5.18) determines $\gamma_c=38°5'$ and (5.19) gives $J=-0.0987$. The countercirculation $\Gamma'=8\pi cV_c(0.0987)\sin(\alpha_c+38°5')$. The lift coefficient may be expressed as $C_L=\frac{\rho V\Gamma}{q(\text{chord})}$ where $q=\frac{1}{2}\rho V^2$. The chord for each profile in the example considered is equal to (2.106)c, hence $C_L=-2\pi(0.985)\sin(\alpha_c+34°51')$. (In the monoplane case the lift coefficient for the N. A. C. A. 4412 airfoil in two-dimensional potential flow is obtained as (cf. reference 14) $2\pi(1.114)\sin(\alpha+\text{constant})$ or the slope of the lift curve in the monoplane case is about 13 percent greater than that in the biplane example treated). Putting $C_L=0$, 0.5, 1.0, and 1.5, respectively, the angles α_c are determined as $\alpha_c=-34°51'$, $-30°8'$, $-25°24'$, and $-20°35'$, respectively (i. e., by equation (5.22) $\alpha_0=-4°48'$, $0°5'$, $4°33'$, $9°22'$, respectively). Columns 12–15 of the table give the values of $\frac{W_1}{2cV}$ and $\frac{W_2}{2cV}$ for the foregoing four values of α_c, and are determined by equations (5.9) and (5.13). The velocities at each profile surface v_1 and v_2 are given in terms of the stream velocity V by the formulas (5.23) and (5.24), $\frac{v_1}{V}=\frac{W_1h_1k_1}{2cV}$ and $\frac{v_2}{V}=\frac{W_2h_2k_2}{2cV}$. The pressure ratios $\frac{p_1}{q}$ and $\frac{p_2}{q}$ shown in figure 12 are given by equation (5.25).

The Smithsonian Tables of Hyperbolic Functions were found useful in the numerical work.

TABLE I. BIPLANE ARRANGEMENT N. A. C. A. 4412

(SEE FIG. 10)

A. UPPER PROFILE

x	y	λ	μ	g_1	$\phi\ (=-\lambda')$	$R_1(\lambda')$	$R_2(\lambda')$	$R_3(\lambda')$	h_1	k_1	$\frac{C_L=0}{\frac{W_1}{2cV}}$	$\frac{C_L=0.5}{\frac{W_1}{2cV}}$	$\frac{C_L=1.0}{\frac{W_1}{2cV}}$	$\frac{C_L=1.5}{\frac{W_1}{2cV}}$
						UPPER SURFACE								
		° ′		° ′	° ′									
1.6458	0.8731	−39 4	1.3132	−1 34	40 38	0.8627	−0.3665	−0.6883	1.063	7.940	−0.0870	0.0574	0.2021	0.3434
1.6121	.9195	−29 36	1.3096	−0 51	30 27	.9996	−.5870	−.6380	1.076	4.160	.1227	.2849	.4459	.6013
1.5839	.9379	−26 6	1.3099	−0 34	26 40	1.0225	−.6687	−.5972	1.076	3.250	.2131	.3778	.5410	.6918
1.5282	.9641	−21 7	1.3111	−0 16	21 23	1.0893	−.7922	−.5305	1.070	2.422	.3424	.5341	.6904	.8533
1.4742	.9836	−17 23	1.3118	0 12	17 10	1.1097	−.8541	−.4931	1.064	2.112	.4247	.5978	.7678	.9291
1.4198	1.0066	−14 2	1.3061	0 18	13 44	1.1251	−.9108	−.3652	1.052	1.858	.5443	.7123	.8764	1.0302
1.3140	1.0323	−8 43	1.3068	0 34	8 9	1.1630	−.9777	−.2265	1.037	1.585	.6784	.8429	1.0027	1.1519
1.2084	1.0504	−4 8	1.3080	0 47	3 21	1.1766	−1.0093	−.0950	1.038	1.424	.7796	.9375	1.0900	1.2307
1.0000	1.0694	3 53	1.3117	1 10	−4 3	1.1753	−1.0064	.1146	1.047	1.267	.8969	1.0400	1.1770	1.3017
.7921	1.0690	11 14	1.3181	1 26	−12 40	1.1405	−.9257	.3407	1.054	1.198	.9599	1.0808	1.1952	1.2971
.5731	1.0460	18 42	1.3251	1 47	−20 29	1.0824	−.7958	.5051	1.030	1.244	.9472	1.0382	1.1386	1.2190
.3799	1.0335	25 55	1.3327	2 1	−27 56	1.0092	−.6421	.6127	1.039	1.311	.8826	.9611	1.0336	1.0949
.1745	1.0036	34 8	1.3408	2 13	−36 21	.9138	−.4577	.6767	1.036	1.477	.7679	.8258	.8786	.9213
−.0314	.9660	43 54	1.3514	2 35	−46 29	.7924	−.2496	.6852	1.024	1.829	.6019	.6398	.6738	.6995
−.2180	.9340	57 2	1.3675	2 52	−59 54	.6380	−.0274	.6224	1.013	2.746	.3834	.4033	.4204	.4314
−.3364	.8952	66 56	1.3818	2 58	−69 54	.5357	.0936	.5491	.988	4.184	.2426	.2530	.2625	.2672
						LOWER SURFACE								
−.4280	0.8657	93 54	1.4333	1 26	−95 20	0.3342	0.2707	0.3507	0.904	65	−0.0162	−0.0164	−0.0165	−0.0168
−.3046	.8635	127 10	1.4364	−1 3	−126 7	.1933	.3560	.1767	.957	5.248	−.1855	−.1893	−.1917	−.1938
−.1891	8618	143 31	1.4345	−1 32	−141 59	.1570	.3590	.1197	.976	4.463	−.2207	−.2236	−.2248	−.2257
.0359	.8567	169 13	1.4274	−1 59	−167 14	.1218	.3691	.0343	.990	3.655	−.2776	−.2782	−.2766	−.2738
.2550	.8520	−169 13	1.4208	−2 10	171 23	.1199	.3696	−.0234	.994	3.263	−.3111	−.3080	−.3014	−.2950
.4680	.8455	−150 5	1.4126	−2 11	152 16	.1335	.3672	−.0796	.994	3.021	−.3412	−.3327	−.3139	−.3092
.6696	.8408	−133 7	1.4078	−2 22	135 39	.1699	.3547	−.1412	.994	2.799	−.3662	−.3498	−.3309	−.3101
.8806	.8294	−116 15	1.3936	−2 29	118 44	.2229	.3334	−.2176	.993	2.739	−.3924	−.3653	−.3355	−.3040
1.0812	.8212	−100 40	1.3830	−2 30	103 10	.2876	.2999	−.2987	.994	2.703	−.4112	−.3716	−.3290	−.2343
1.2812	.8148	−84 57	1 3710	−2 30	87 27	.3887	.2309	−.4117	.998	2.824	−.4191	−.3601	−.2984	−.2354
1.3763	.8083	−77 17	1 3666	−2 30	79 47	.4477	.1810	−.4708	.999	2.993	−.4120	−.3417	−.2687	−.1950
1.4692	.8125	−68 40	1 3520	−2 30	71 10	.5236	.1066	−.5391	1.001	3.367	−.3899	−.3053	−.2181	−.1306
1.5158	.8149	−63 58	1.3463	−2 28	66 6	.5730	.0520	−.5783	1.005	3.714	−.3675	−.2736	−.1773	−.0810
1.5621	.8209	−58 39	1.3413	−2 22	61 0	.6261	−.0123	−.6150	1.014	4.330	−.3358	−.2320	−.1261	−.0207
1.6068	.8320	−52 11	1.3340	−2 18	54 29	.6913	−.1087	−.6548	1.031	5.250	−.2800	−.1631	−.0452	.0716
1.6287	.8430	−47 41	1.3290	−2 4	49 45	.7535	−.1891	−.6759	1.040	6.000	−.2256	−.0990	.0289	.1548
1.6458	.8731	−39 4	1.3132	−1 34	40 38	.8627	−.3665	−.6883	1.063	7.940	−.0870	.0574	.2021	.3434

B. LOWER PROFILE

x	y	λ	$-\mu$	g_2	$\phi\ (=-\lambda')$	$R_1(\lambda')$	$R_2(\lambda')$	$R_3(\lambda')$	h_2	k_2	$\frac{C_L=0}{\frac{W_2}{2cV}}$	$\frac{C_L=0.5}{\frac{W_2}{2cV}}$	$\frac{C_L=1.0}{\frac{W_2}{2cV}}$	$\frac{C_L=1.5}{\frac{W_2}{2cV}}$
						UPPER SURFACE								
		° ′		° ′	° ′									
0.4440	−0.8606	−93 23	1.2379	10 32	82 51	0.4168	0.2164	−0.4584	1.022	11.756	0.0899	0.0217	−0.0467	−0.1145
.4096	−.8025	−110 37	1.1703	8 51	101 46	.2924	.3021	−.3209	1.112	6.918	−.0189	−.1108	−.1626	−.2370
.3791	−.7807	−117 23	1.1516	7 48	109 35	.2600	.3251	−.2695	1.138	5.964	−.1073	−.1490	−.2000	−.2440
.3191	−.7498	−127 47	1.1275	6 15	121 32	.2008	.3470	−.2044	1.158	5.010	−.1634	−.2007	−.2378	−.2838
.2612	−.7269	−136 12	1.1102	4 37	131 35	.1693	.3583	−.1589	1.170	4.485	−.1977	−.2307	−.2623	−.2917
.2050	−.7153	−143 24	1.1050	3 23	140 11	.1464	.3653	−.1215	1 173	4.238	−.2248	−.2536	−.2808	−.3056
.0911	−.6881	−156 50	1.0944	1 8	155 42	.1221	.3716	−.0720	1.175	3.819	−.2582	−.2818	−.3036	−.3229
−.0215	−.6700	−168 55	1.0880	−0 14	169 9	.1118	.3766	−.0313	1.175	3.575	−.2856	−.3057	−.3238	−.3394
−.2419	−.6540	169 35	1.0976	−4 35	−165 0	.1127	.3739	.0377	1.160	3.241	−.3228	−.3380	−.3511	−.3614
−.4555	−.6586	150 30	1.1306	−7 27	−143 7	.1402	.3669	.1103	1.121	3.012	−.3586	−.3708	−.3806	−.3872
−.6711	−.6763	132 36	1.1741	−9 30	−123 6	.1923	.3502	.1926	1.070	2.835	−.3919	−.4020	−.4091	−.4133
−.8667	−.7019	117 11	1.2191	−10 20	−106 51	.2663	.3080	.2893	1.018	2.718	−.4125	−.4203	−.4253	−.4260
−1.0660	−.7333	101 51	1.2648	−10 34	−91 17	.3513	.2656	.3886	.986	2.676	−.4344	−.4405	−.4438	−.4421
−1.2628	−.7713	86 32	1.3110	−10 26	−76 6	.4740	.1660	.5146	.957	2.735	−.4247	−.4280	−.4285	−.4234
−1.4622	−.8149	70 2	1.3594	−9 26	−60 36	.6309	−.0056	.6419	.898	3 243	−.3566	−.3566	−.3543	−.3463
−1.5589	−.8391	59 57	1.3855	−8 23	−51 34	.7368	−.1492	.6992	.861	4.312	−.2715	−.2700	−.2669	−.2680
						LOWER SURFACE								
−1.6490	−0.8664	39 16	1.4371	−5 25	−33 51	0.9582	−0.5229	0.7030	0.832	33	0.0330	0.0327	0.0320	0.0357
−1.5126	−.8650	21 30	1.4404	−2 8	−19 22	1.1317	−.8647	.5270	.829	2.766	.4140	.4020	.3872	.3749
−1.4050	−.8706	14 20	1.4399	−1 0	−13 20	1.1648	−.9584	.3822	.848	1.992	.5736	.5536	.5284	.5056
−1.2189	−.8742	4 8	1.4375	0 18	−4 26	1.2058	−1.0546	.1341	.854	1.488	.7944	.7574	.7149	.6727
−.9847	−.8815	−4 8	1.4335	1 45	2 23	1.2092	−1.0634	−.0728	.862	1.307	.9198	.8656	.8020	.7528
−.7785	−.8861	−11 39	1.4311	2 33	9 6	1.1890	−1.0151	−.2705	.862	1.247	.9931	.9277	.8466	.7820
−.5784	−.8910	−18 48	1.4279	3 31	15 17	1.1500	−.9254	−.4288	.861	1.259	1.0100	.9329	.8399	.7634
−.3649	−.9033	−26 43	1.4186	4 45	21 58	1.0929	−.7967	−.5660	.860	1.342	.9827	.8953	.7921	.7052
−.1681	−.9125	−35 7	1.4082	5 46	29 21	1.0125	−.6285	−.6668	.859	1.524	.9024	.8064	.6969	.6030
.0513	−.9201	−45 13	1.3919	7 6	38 7	.9056	−.4248	−.7214	.862	1.905	.7654	.6674	.5632	.4577
.1492	−.9246	−50 57	1.3775	7 50	43 7	.8425	−.3151	−.7254	.869	2.241	.6787	.5797	.4763	.3719
.2510	−.9236	−58 13	1.3600	8 41	49 32	.7618	−.1864	−.7085	.882	2 896	.5634	.4667	.3656	.2656
.3014	−.9213	−62 39	1.3474	9 10	53 29	.7136	−.1157	−.6891	.889	3.403	.4943	.3998	.3022	.2044
.3514	−.9152	−68 6	1.3325	9 41	58 25	.6555	−.0370	−.6575	.900	4.351	.4117	.3579	.2273	.1339
.3986	−.9037	−75 27	1.3094	10 10	65 17	.5798	.0557	−.6052	.921	6.340	.3057	.2207	.1337	.0474
.4248	−.8922	−81 7	1.2907	10 33	70 34	.5260	.1146	−.5614	.965	8.770	.2323	.1523	.0710	−.0099
.4440	−.8606	−93 23	1.2379	10 32	82 51	.4168	.2164	−.4584	1.022	11.756	.0899	.0217	−.0467	−.1145