REPORT No. 544

COMBUSTION IN A BOMB WITH A FUEL-INJECTION SYSTEM

By MILDRED COHN and ROBERT C. SPENCER

SUMMARY

Fuel injected into a spherical bomb filled with air at a desired density and temperature could be ignited with a spark a few thousandths of a second after injection, an interval comparable with the ignition lag in fuel-injection engines. The effect of several variables on the extent and rate of combustion was investigated: Time intervals between injection and ignition of fuel of 0.003 to 0.06 second and one of 5 minutes; initial air temperatures of 100° C. to 250° C.; initial air densities equivalent to 5, 10, and 15 absolute atmospheres pressure at 100° C.; and air-fuel ratios of 5 to 25.

The 5-minute interval between injection and spark permitted the fuel to vaporize completely; for the shorter periods the explosion took place with liquid-vapor mixtures. For the short periods, the time of reaction increased as the period was increased and the response of combustion to changes in the initial conditions was more marked than it was for the long period, indicating the significance of distribution and vaporization. An increase in initial temperature decreased the time of reaction for both types but increased the extent of combustion for only the short-period mixtures. For the uniform vapor-air explosions, an increase in air density lengthened the reaction time. For the nonuniform liquid-vapor-air explosions, an increase in air density from 0.00473 to 0.0095 gram per cubic centimeter (equivalent to 5 and 10 atmospheres pressure at 100° C.) shortened the time of reaction but (with the exception of the tests at 100° C.), as the density was increased to 0.0142 gram per cubic centimeter (equivalent to 15 atmospheres pressure at 100° C.), the reaction time tended to lengthen. The leanest mixture that would explode with a delay period of 5 minutes corresponded to an air-fuel ratio of 20.7. For a delay period of 0.004 second it corresponded to one of 25. The reaction time was a minimum and the maximum pressure a maximum at an air-fuel ratio of 10 for the delayed explosions. At the higher densities and temperatures, the two types of explosions acted more alike.

INTRODUCTION

The National Advisory Committee for Aeronautics has carried out investigations of the formation, penetration, and combustion of fuel sprays. The N. A. C. A. combustion apparatus (reference 1) has been used to photograph the combustion of fuel under conditions analogous to those existing in the combustion chamber of a high-speed compression-ignition engine. This apparatus has also been used for an investigation in which the injected fuel was ignited by a spark (reference 2). The individual effects of such variables as the time interval between the injection and the spark, the air temperature, the air density, and the turbulence cannot, however, be determined with the combustion apparatus.

An analysis of the effects of such variables on the combustion of fuel sprays would be very helpful in explaining the phenomena observed in engines. A spherical bomb was therefore constructed into which the fuel could be injected under varying conditions and be ignited by a spark at any desired time after injection. Homogeneous mixtures of vaporized fuel and air can be obtained by allowing sufficient time to elapse between injection and ignition and the combustion of such uniform mixtures can be compared with the combustion of nonuniform mixtures of liquid fuel, fuel vapor, and air.

The combustion apparatus has recently been utilized for tests in which ignition was effected by compression (reference 3). When compared with the data of reference 2, the results indicated that the data obtained with spark ignition would be useful in studying combustion obtained by compression ignition. The results obtained with the bomb, particularly those at high temperatures and pressures, should be an aid in interpreting phenomena in compression-ignition engines. The present paper covers the results obtained when a hydrogenated safety fuel was used in the spherical bomb and the conditions varied. The tests were conducted at the Langley Field laboratories during the winter of 1933–34.

APPARATUS AND METHOD

THE BOMB AND AUXILIARY EQUIPMENT

The spherical bomb designed for this investigation is constructed of stainless steel and has a volume of 600 cubic centimeters. The bomb is equipped with an optical-type pressure indicator, a spark plug, an injection valve, and an air inlet and exhaust fitting. The bomb is immersed in a liquid bath thermostatically controlled to within 1° C. Tests showed that

after the bath temperature had been held constant for 10 minutes, no appreciable difference could be detected between the temperature of the air within the bomb and that of the bath. The assembled test apparatus is shown in figure 1. Fuel is sprayed into the bomb (fig. 2) through a 13-orifice nozzle (fig. 3) designed according to the recommendations of Spanogle and Foster (reference 4).

The experimental arrangement is shown by the sketch of figure 4. The system consists of a high-pressure hand pump, a reservoir, a poppet valve, an injection valve, and a clutch mechanism for operating the poppet valve. The clutch is engaged by pulling a trip lever; the camshaft then makes a single revolution. The pressure of the fuel above the poppet valve is sufficient to hold it closed as the spring is compressed by the cam follower. When the cam follower strikes the valve and opens it slightly, the pressure is no longer effective and the compressed spring completes the opening of the valve very rapidly. A pressure wave then traverses the injection tube to the injection valve, causing the injection of the fuel.

The fuel quantity may be changed by varying the pressure in the reservoir or by changing the size of the reservoir. The fuel weight can be controlled within ±2 percent. The fuel is circulated under pressure through the injection valve by a pump in order to control the temperature of the fuel at the valve. The temperature of the fuel was maintained at 45° C. in all the tests.

The electrodes of the spark plug were extended by nichrome wires ending in nichrome balls 2.5 millimeters in diameter. The spark gap was kept adjusted to about 0.46 millimeter, as less clearance apparently caused considerable difficulty in igniting the mixture. The spark gap was located at the center of the bomb, and the injection valve was so mounted that the spray from the center orifice of the nozzle impinged directly upon the gap. This arrangement insured the presence of fuel at the spark gap but, because of the wetting of the plug, it necessitated the use of a heavy spark discharge. The timing of the spark with respect to the spray could be varied by the phase-changing device indicated in figure 4. This device permitted a variation in spark timing from 0 to 0.063 second after injection start. Longer intervals had to be manually timed, and the range between 0.063 second and about 10 seconds could not be investigated.

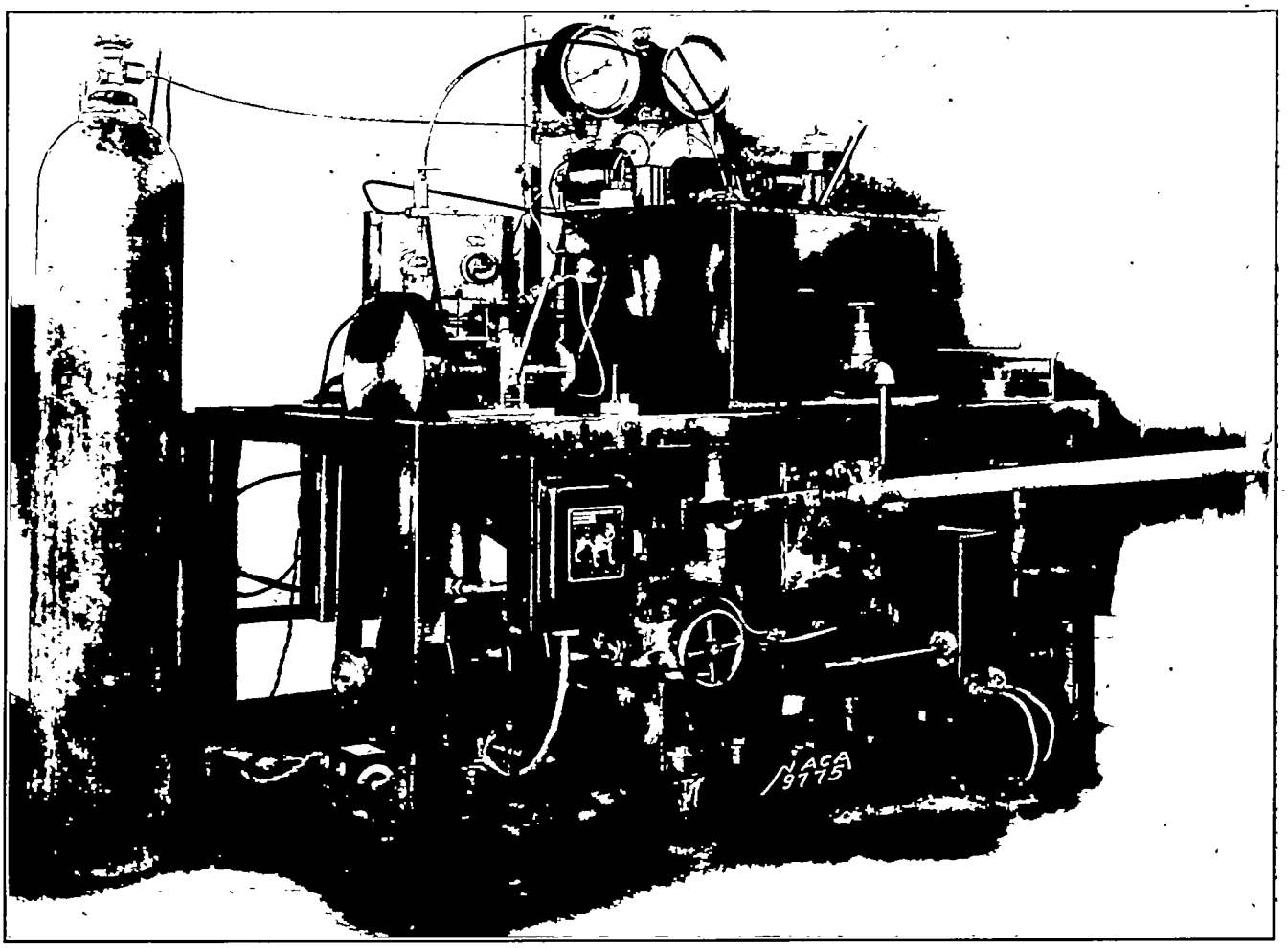

FIGURE 1.—The assembled apparatus.

In order to set the timing of the spark with respect to the spray, the spark-timing switch was connected as the switch for a neon-tube stroboscope and the start of injection was then visually determined. These settings were checked by wrapping heavy paper around a pulley, mounting the injection valve and the end of the ignition cable just above the pulley, and making an injection against the paper while the pulley was

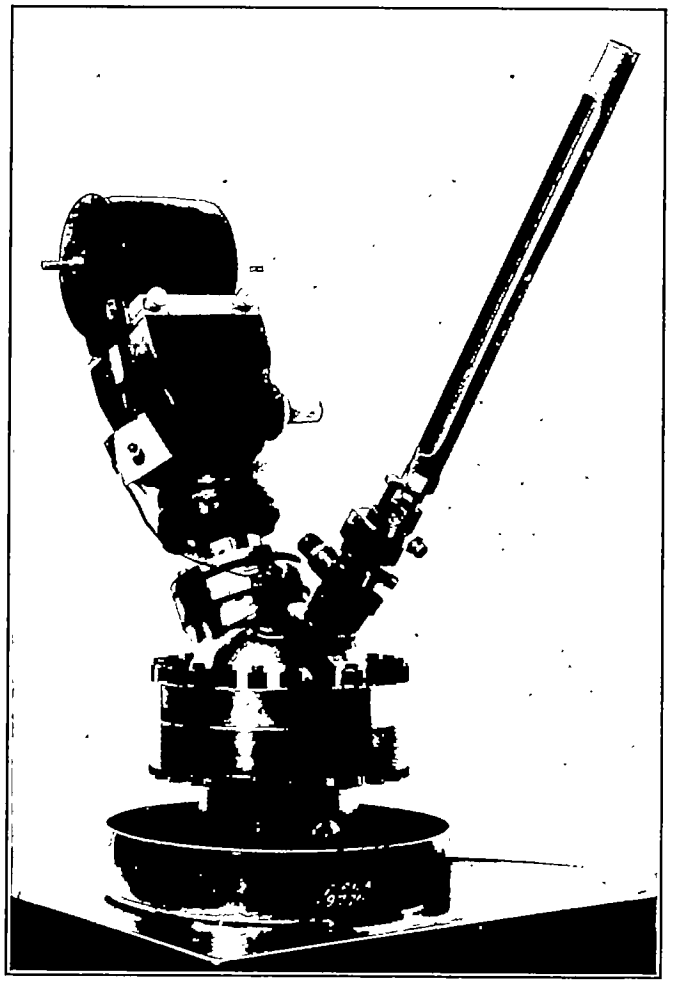

FIGURE 2.—The bomb assembled with the optical indicator.

turning at a known speed. The timing of the spark with respect to the spray was determined by measuring the distance between the mark of the spark and the mark of the injection. As a result of these tests it is estimated that the spark timing did not vary more than 0.0001 second for any one setting of the switch.

The pressure indicator is of the optical type and has been described in reference 3. The two diaphragms used in the test were designed for pressures of the order of 70 and 120 atmospheres. The natural frequencies of the diaphragm and the optical gear were 9,600 and 11,000 vibrations per second, respectively. The indicator was calibrated by means of a dead-weight gage tester at temperatures up to 250° C. The film speed used during most of the tests was 100 inches per second, but a few tests were made with a film speed of 33 inches per second. The indicator is provided with a spark gap for recording the time of passage of the igniting spark.

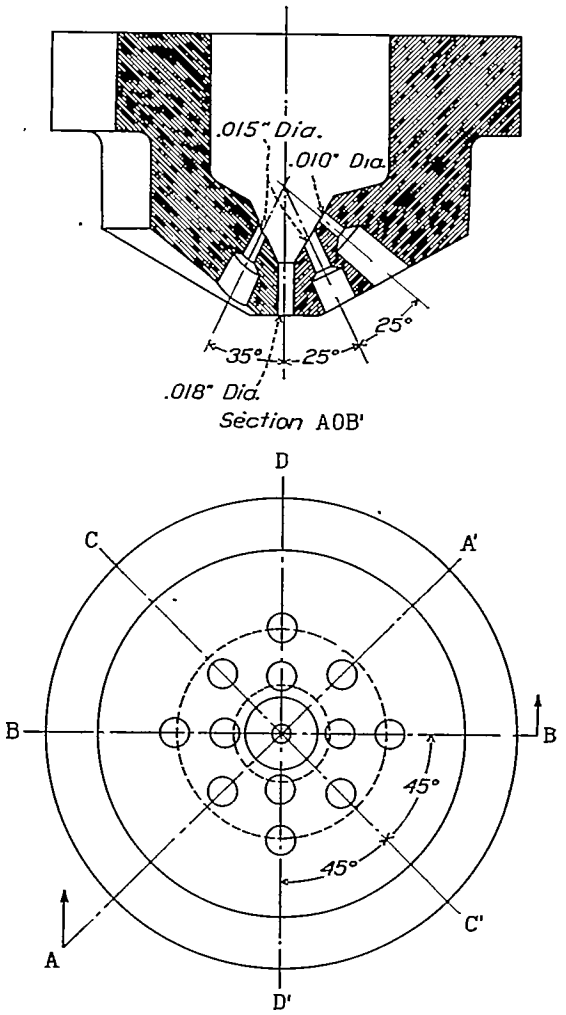

FIGURE 3.—The 13-orifice nozzle. Plane DD' is identical with BB' and plane CC' is identical with AA'.

THE FUEL

Hydrogenated safety fuel (reference 5) was used throughout these tests. The properties peculiar to this fuel are its high octane number and its high flash point (41° C. as compared with −32° C. to −43° C. for gasolines). The percentage of aromatic and naphthenic compounds is much higher in hydrogenated fuel than it is in ordinary straight-run or cracked distillates. The results of actual engine tests conducted at this laboratory with the safety fuel are

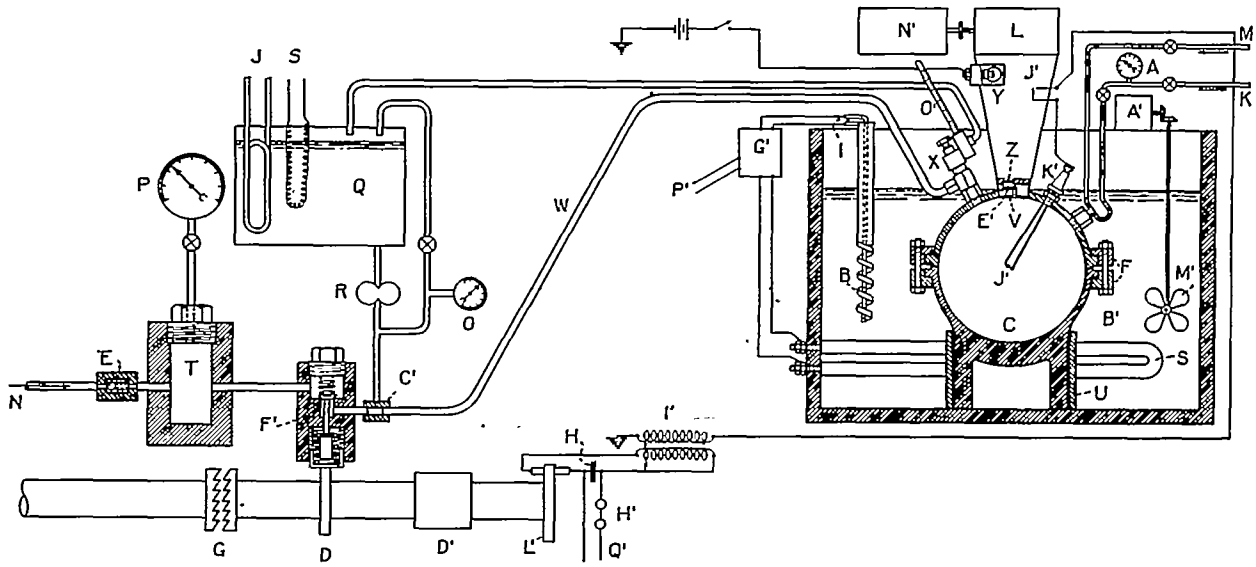

A, air gage
B, bimetal strip
C, bomb
D, cam
E, check valve
F, clamping rings
G, clutch
H, condenser, 8 microfarad
I, contact point
J, cooling coil
K, exhaust
L, film drum
M, from air bottle
N, from high-pressure pump
O, fuel circulating pressure gage
P, fuel high-pressure gage
Q, fuel reservoir
R, gear pump
S, heating coil
T, high-pressure reservoir
U, holder for bomb
V, indicator diaphragm
W, injection tube
X, injection valve
Y, lamp
Z, lens
A', motor
B', oil bath
C', orifice, 0.020-inch
D', phase-changing gears
E', pivoted mirror
F', poppet valve
G', relay
H', resistance lamps
I', spark coil
J', spark gap
K', spark plug
L', spark-timing switch
M', stirrer
N', synchronous motor
O', thermometer
P', voltage 220 a. c.
Q', voltage 230 d. c.

FIGURE 4.—Diagram of the apparatus.

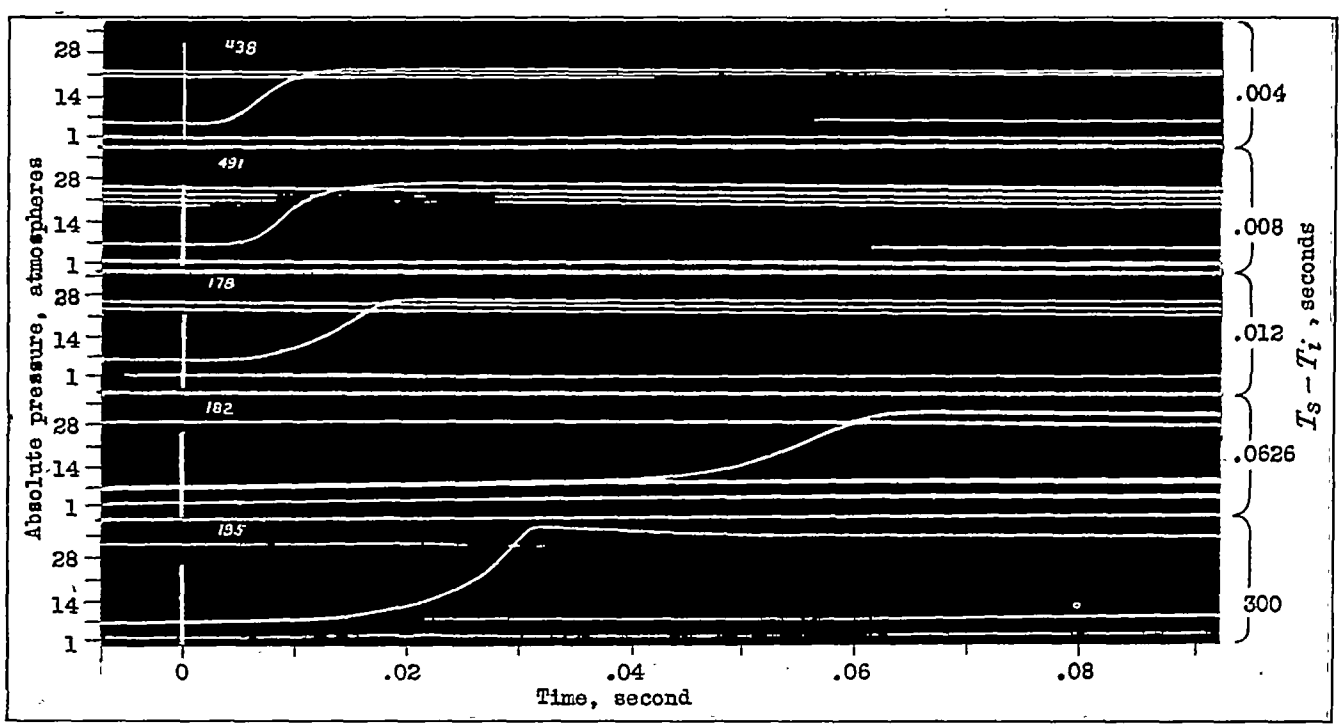

FIGURE 5.—Effect of time interval ($T_s - T_i$) between injection and spark. Initial air temperature, 200° C.; initial air pressure, 6.3 atmospheres, absolute; air-fuel ratio, 15.

presented in reference 6. The properties of the fuel are listed below:

Properties of hydrogenated safety fuel

Specific gravity	0.882
Initial boiling point	156° C.
50 percent point	180° C.
80 percent point	190° C.
90 percent point	193° C.
Final boiling point	206° C.
Recovery, percent	99
Octane number [1]	95
Flash point (Abel closed-cup method)	41° C.
Percentage carbon	88.5
Percentage hydrogen	11.5
Heat of combustion [2] (constant volume at 30° C.), calories/gram	10,400

ANALYSIS OF RECORDS

The data obtained from the pressure-indicator records included the time from the injection to the spark ($T_s - T_i$), the time from the spark to the start of pressure rise, the time for completion of the total reaction when possible, and the time for the completion of a definite percentage of the reaction, as well as the time of attaining the maximum pressure. (See table I.) In the determination of the time for the attainment of maximum pressure, the line recorded by the passage of the spark was considered zero.

Difficulty was encountered in the determination of the time of attainment of maximum pressure owing to the long duration of a more or less constant pressure (fig. 5) at the end of the explosion when the rate of heat input is apparently balanced by the rate of heat loss. Owing to the uncertainty of the location of the point of maximum pressure, for comparative purposes, another point in the pressure-time curve was arbitrarily chosen at $P=2.5\ P_i$, where P_i is the initial pressure. In figure 6 both the time interval from the spark to 2.5 P_i and the interval from the spark to maximum pressure are plotted for the delayed explosions. As figure 7 shows, no difficulty was experienced in determining the location of maximum pressure for these explosions. Figure 8 shows that, for comparative purposes, the chosen time interval ($T_{2.5P_i} - T_s$) may be used as an equivalent of the total time between the passage of the spark and the attainment of maximum pressure ($T_{P_{max}} - T_s$).

[1] Determined against iso-octane and heptane blends on series 30 Ethyl Gasoline Corporation test engine; jacket temperature, 300° F.; engine speed, 600 r. p. m.; compression pressure, 190 to 200 pounds per square inch.

[2] Determined by the National Bureau of Standards.

Owing to the change in the specific heats with temperature, the percentage of reaction does not remain constant for the same P/P_i ratio at different initial temperatures. Assuming that the products of the reaction are CO_2 and H_2O and using Lewis and Randall's values for the specific heats of gases (reference 7) and Cragoe's values for the specific heat of the fuel (reference 8), the following results are obtained:

Temperature °C.	Percentage reaction $P=2.5\ P_i$
100	17.3
150	20.0
200	22.4
250	25.8

If the time necessary to achieve a definite percentage of reaction had been chosen instead of the time necessary to reach 2.5 P_i, the same trends would have been observed qualitatively.

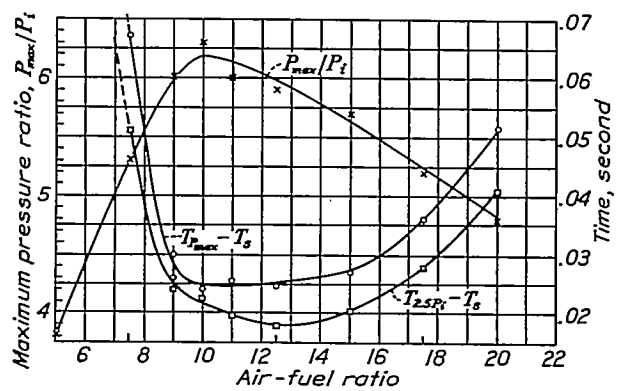

FIGURE 6.—Effect of air-fuel ratio on maximum pressure ratio and time of reaction. Time interval between injection and spark ($T_s - T_i$), 5 minutes; initial air temperature, 200° C.; initial air pressure, 6.3 atmospheres, absolute.

TEST RESULTS

The test results are summarized in table I. The data are not complete at 100° C. because ignition would not take place over a complete range of time intervals between the injection of the fuel and the passage of the spark. The three densities used at each temperature (100°, 150°, 200°, and 250° C.) were equivalent to 5, 10, and 15 atmospheres absolute pressure at 100° C. and shall hereinafter be referred to as 5, 10, and 15 atmospheres. At a density of 5 atmospheres the range extended from 0.003 to 0.020 second; at 10 atmospheres the limits were from 0.003 to 0.052 second; and at a density of 15 atmospheres the range was from 0.004 to 0.056 second. At all other temperatures the mixture would explode throughout the entire range investigated, after the limiting value in spark timing, at 0.003 or 0.004 second after injection.

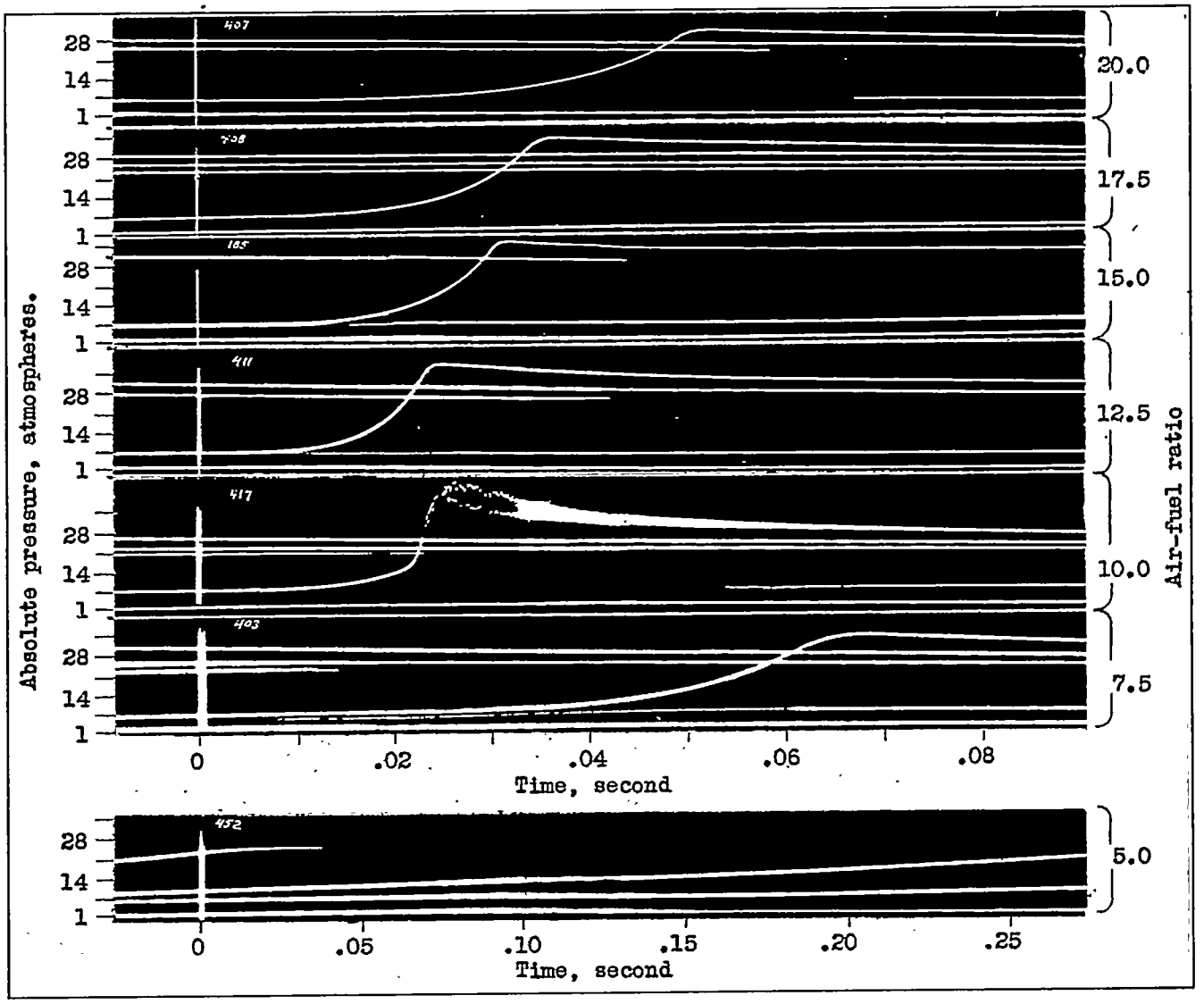

FIGURE 7.—Effect of air-fuel ratio. Initial air temperature, 200° C.; initial air pressure, 6.3 atmospheres, absolute; interval between injection and spark, 5 minutes.

TABLE I.—THE RATE AND EXTENT OF COMBUSTION FOR HYDROGENATED SAFETY FUEL INJECTED INTO AIR AT DIFFERENT DENSITIES

[Air-fuel ratio, 15]

Initial temperature	Initial pressure P_i (abs.)	Time intervals between— Injection and spark (T_s-T_i)	Spark and start of pressure rise	Spark and 2.5 initial pressure ($T_{2.5P_i}-T_s$)	Maximum pressure / Initial pressure P_{max}/P_i
DENSITY OF 5 ATMOSPHERES (REFERRED TO 100° C.)					
° C.	Atmospheres	Seconds	Second	Second	
100	5.0	0.0040	0.0055	----------	1.5
		.0080	.0075	----------	2.4
		.0120	(1)	(1)	(1)
150	5.7	.0040	.0055	0.0155	3.3
		.0080	.0070	.0290	3.3
		.0120	.0105	.0375	3.3
		.0630	(1)	.27	3.75
		300	.0140	.0240	6.2
200	6.3	.0040	.0030	.0085	3.4
		.0080	.0045	.0095	4.0
		.0120	.0045	.0140	3.9
		.0630	.0385	.0540	4.3
		300	.0100	.0205	5.7
250	7.0	.0040	.0030	.0060	3.6
		.0080	.0030	.0085	3.8
		.0120	.0035	.0095	3.9
		.0630	.0120	.0150	4.2
		300	.0100	.0205	5.3
DENSITY OF 10 ATMOSPHERES (REFERRED TO 100° C.)					
100	10.0	0.0040	0.0040	0.0125	4.2
		.0080	.0095	.0275	4.0
		.0120	.0085	.0305	3.8
150	11.4	.0040	.0035	.0100	4.2
		.0080	.0040	.0120	4.5
		.0120	.0070	.0175	4.2
		.0630	.0785	.1355	4.1
		300	.0115	.0295	6.0
200	12.7	.0040	.0025	.0050	4.4
		.0080	.0040	.0095	4.4
		.0120	.0050	.0105	4.5
		.0630	.0130	.0325	4.6
		300	.0090	.0260	5.6
250	14.0	.0040	.0020	.0045	4.3
		.0080	.0025	.0055	4.3
		.0120	.0025	.0075	4.4
		.0630	.0060	.0175	4.9
		300	.0110	.0260	5.1
DENSITY OF 15 ATMOSPHERES (REFERRED TO 100° C.)					
100	15.0	0.0040	0.0040	0.0095	5.0
		.0080	.0075	.0250	4.5
		.0120	.0075	.0275	4.5
150	17.0	.0040	.0030	.0070	4.9
		.0080	.0060	.0150	4.6
		.0120	.0070	.0195	4.3
		.0630	.0575	.1015	4.1
		300	.0175	.0425	5.8
200	19.1	.0040	.0020	.0055	4.7
		.0080	.0035	.0080	4.5
		.0120	.0055	.0125	4.5
		.0630	.0480	.0695	4.5
		300	.0100	.0320	5.5
250	21.1	.0040	.0020	.0045	4.6
		.0080	.0025	.0055	4.6
		.0120	.0040	.0075	4.7
		.0630	.0150	.0240	5.2
		300	.0080	.0245	5.5

[1] Value not measurable.

MAXIMUM PRESSURES

The ratio of maximum pressure to initial pressure (P_{max}/P_i) is tabulated for the various temperatures and pressures because this ratio is indicative of the extent of effective combustion. No attempt has been made to correct the values of the maximum pressure for heat losses, although the time required to attain maximum pressure varies.

It will be noted from the table that the ratios of maximum to initial pressure for the so-called "delayed"

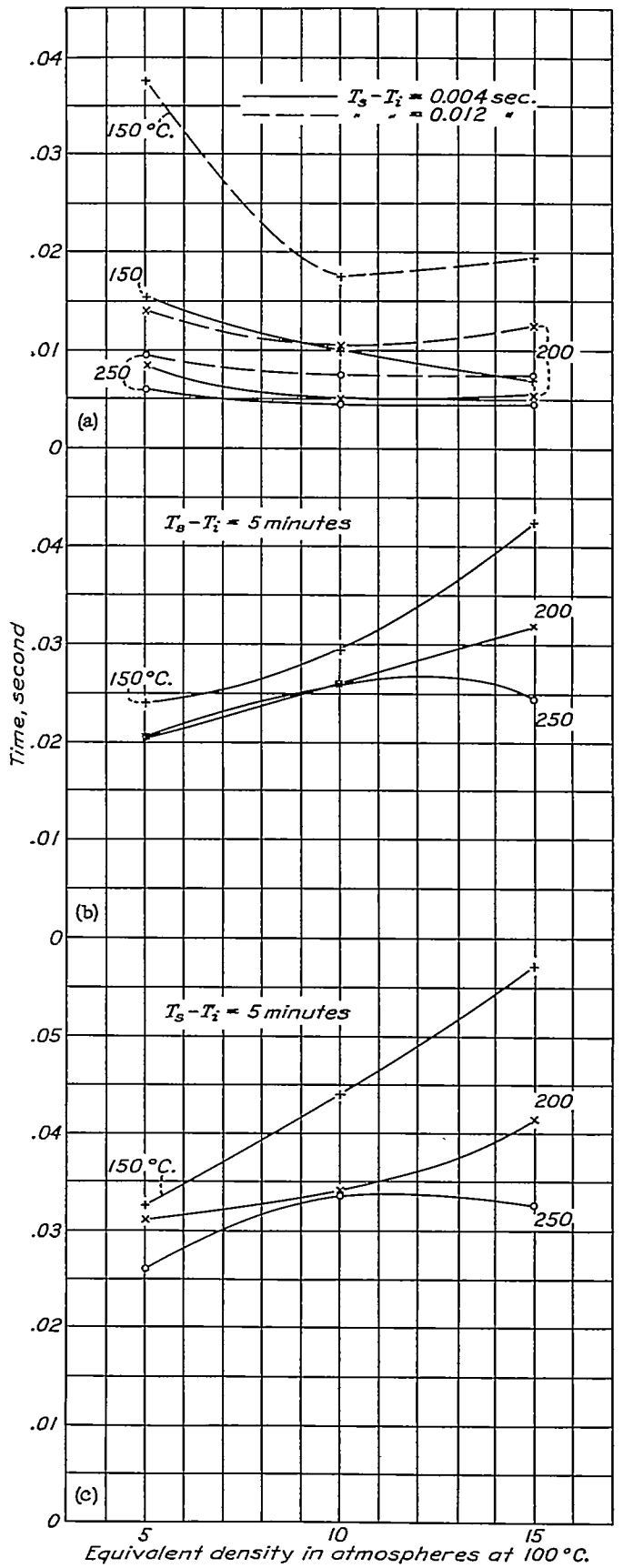

FIGURE 8.—Effect of air density on time of reaction. Air-fuel ratio, 15. (a) Time required for pressure to reach 2.5 P_i. T_s-T_i, 0.004 and 0.012 second. (b) Time required for pressure to reach 2.5 P_i. T_s-T_i, 5 minutes. (c) Time required for pressure to reach maximum. T_s-T_i, 5 minutes.

explosions (spark occurring several minutes after injection of the fuel) greatly exceed those for the explosions with short time intervals between injection and ignition, this effect being more marked at low temperatures and air densities. For those mixtures exploding at a very short time after injection, the pressure ratio (P_{max}/P_i) increases with increased air density and, in general, increases with increased temperature. On the other hand, for the delayed explosions the pressure ratio decreases with increased temperature. The delayed explosions exhibited no definite trend of P_{max}/P_i with change of density although, in general, the ratio decreased slightly with an increase of density.

For the delay period of 0.004 second the variation of maximum pressure with air-fuel ratio was direct; whereas for the delayed explosions the maximum pressure ratio reached a maximum value at an air-fuel ratio of 10. The leanest mixture that would explode

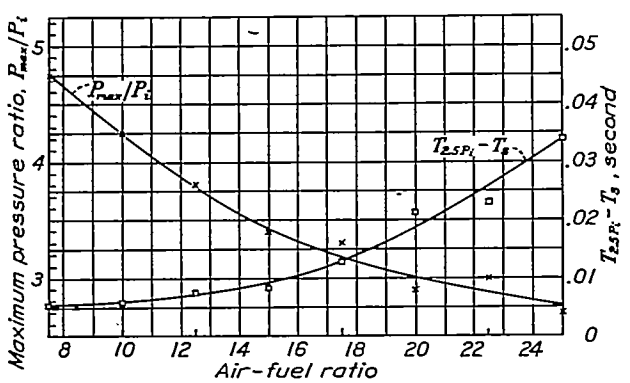

FIGURE 9.—Effect of air-fuel ratio on maximum pressure ratio and on time of reaction. T_s-T_i, 0.004 second; initial air temperature, 200°C.; initial air pressure, 6.3 atmospheres, absolute.

with a delay period of 5 minutes (figs. 6 and 7) corresponded to an air-fuel ratio of 20.7. With a delay period of 0.004 second (fig. 9) an air-fuel ratio of 25 would explode.

With air-fuel ratios in the neighborhood of 10 in the case of delayed explosions, the reaction was, in fact, so intense in this range that severe vibrations were set up which continued for some time after the maximum pressure was attained (see fig. 7). The explosions were accompanied by a high-pitched whistle or "squeak." The frequency of the vibrations was approximately 6,000 per second. The appearance of the highest frequency at the point of greatest pressure (that is, highest temperature) indicated that the vibrations were actually in the gas.

TIME OF REACTION

The values for the time interval $T_{2.5P_i}-T_s$ are tabulated for all conditions except that of a pressure of 5 atmospheres and a temperature of 100° C., where the pressure never reached 2.5 times its initial value. Under the same temperature and pressure conditions the shortest reaction time corresponds to the shortest T_s-T_i interval; as the time between the injection of the fuel and the passage of the spark increased, the rate of pressure rise decreased and the time between the occurrence of the spark and the beginning of a perceptible rise increased. The typical series of records shown in figure 5 illustrates this trend. As the temperature increases, the time $T_{2.5P_i}-T_s$ decreases. An increase in air density at first decreases the time of reaction for the liquid-vapor-air explosions but, at the higher densities and the temperatures above 100° C., there is a tendency for the interval to lengthen with further increase in density. For the vapor-air explosions, an increase in air density increases the time of reaction. It will be seen that, notably at the lower temperatures, the time between the spark and the attainment of a pressure equal to $2.5P_i$ was sometimes shorter for the delayed explosions than it was for some of the others. If the maximum rates of pressure rise are compared, however, the delayed explosions always yield the higher values because the reaction autoaccelerates and the delayed explosions attain the higher pressures. The effect of fuel concentration on reaction time is shown in figures 6 and 9. For the delayed explosions, the reaction time was a minimum at an air-fuel ratio of 10.

SUMMARY OF TEST RESULTS

The test results may be summarized as follows:

For the explosions having T_s-T_i periods between 0.003 and 0.06 second, the extent of effective combustion, as measured by P_{max}/P_i—

- varied directly with temperature;
- varied directly with density; and
- varied directly with fuel concentration.

The time of reaction—

- varied directly with the T_s-T_i interval;
- varied inversely with temperature;
- varied inversely with density at low densities and directly with density at the higher densities; and
- varied inversely with fuel concentration.

For the explosions having a T_s-T_i period of 5 minutes, the extent of effective combustion—

- varied inversely with temperature owing to changing specific heats;
- exhibited no definite trend with increase of density but tended to decrease slightly; and
- reached a maximum at an air-fuel ratio of 10.

The time of reaction—

- varied inversely with temperature;
- varied directly with density; and
- reached a minimum at an air-fuel ratio of 10.

PRECISION OF RESULTS

Excellent agreement was generally obtained between records taken under the same conditions. With a T_s-T_i period of 0.063 second, however, the variation in the time of reaction sometimes reached

50 percent. The usual variation of the maximum pressure was between 2 and 3 percent with a maximum variation of 10 percent. The maximum pressure could be measured within one-half atmosphere. Time intervals could be measured on the film drum to within 0.0005 second as the film drum was driven by a synchronous motor.

When a number of records were taken without cleaning the bomb, the time of reaction increased. The inside of the bomb was therefore never allowed to accumulate a coating of carbon but was cleaned very thoroughly after every few tests. At least one test for each condition was made with the clean bomb. The usual procedure was to make a test with the clean bomb and then to make several check tests with the bomb uncleaned but flushed thoroughly with air. The tabular data represent the average of at least three records for each recorded value; the conclusions result from the trends exhibited by approximately 650 individual records.

DISCUSSION

The validity of drawing analogies between the combustion in a fuel-injection engine and the combustion of a homogeneous mixture of fuel and air can be judged from these results. With respect to each variable considered—air temperature, air density, and air-fuel ratio—the behavior of the vapor-air mixture differs from that of the liquid-vapor-air mixture. It must not be forgotten, however, that the temperatures encountered in an engine at the moment of ignition are considerably higher than the corresponding temperatures used in these tests. When the initial density is comparable with densities in an engine (the two higher densities correspond to compression ratios of 7.9 and 11.8, respectively), the two types of explosion become more similar in behavior, particularly at the higher temperatures.

VARIATION IN TIMING

As the time between injection of the fuel and passage of the spark was increased, the rate of pressure rise decreased considerably, accompanied by an increase in the time between the spark and the start of pressure rise. The phenomena are similar to those found with the N. A. C. A. combustion apparatus (reference 2), and at the time of the reported tests an explanation was suggested on the basis of a change in the composition of the mixture with increased time due to vaporization and decomposition of the fuel. In the present tests, however, it is believed that the temperatures were too low for the occurrence of appreciable decomposition (references 9 and 10).

An analysis of the significance of the time variable presents the following potential effects: (1) change in distribution of fuel with a consequent change in the air-fuel ratio at the point of ignition; (2) increase in quantity of fuel vaporized, which may involve a change in the ratio of air to fuel vapor, a greater predominance of the rate of homogeneous reaction over the heterogeneous liquid-air surface reaction if the latter exists, and perhaps a change in composition of the vapor because of preferential vaporization of certain components; (3) chemical reactions occurring before ignition, which include preflame oxidation, decomposition of the fuel, formation of highly activated molecules of very short life; and (4) change in the degree of turbulence, gradual decrease after the primary disturbance due to injection. Although no satisfactory explanation of the phenomena has been found, a brief discussion of the foregoing possibilities will be given here.

The first possibility was eliminated by the tests varying the air-fuel ratio. Although the rate of pressure rise varied with the air-fuel ratio, the initial rate for the delayed explosions, regardless of the air-fuel ratio, was never as great as it was for the short T_s-T_i periods. Even the maximum rate of pressure rise of the delayed explosions did not exceed that of some of the short-interval ones, as shown by the records for an air density of 15 atmospheres and a T_s-T_i period between 0.003 and 0.004 second in which the maximum rate of pressure rise was as great as the highest maximum rate obtainable with the delayed explosions, namely, that at an air-fuel ratio of 10. (See fig. 7.) The time lag preceding the start of pressure rise was longer for the delayed explosions. (See figs. 5 and 7.) These comparisons conclusively prove that the air-fuel ratio is not the sole cause of the variation in pressure rise observed with different timing.

The second possible explanation, a predominance of the homogeneous over the heterogeneous reaction, implies the existence of a greater percentage of the fuel in the vapor phase and also assumes that the rate of the homogeneous reaction is slower than that of the heterogeneous reaction (an assumption that is, a priori, very doubtful). At least qualitatively, an increase in temperature with the same T_s-T_i period should be equivalent to increasing the T_s-T_i period and holding the temperature constant. Quantitatively, the effect would depend somewhat upon the relative temperature coefficients of the reactions. It is obvious, however, from the data that an elevation of the initial temperature decreases the time and increases the rate of reaction; whereas an increase in the time interval between injection and spark has the reverse effect. It may therefore be concluded that an increase in the proportion of fuel in the vapor phase does not account for the decrease in the rate of reaction unless an increase in initial temperature in some way has an effect unrelated to vaporization that more than compensates the effect of increased vaporization.

The possibility of chemical reactions occurring before ignition was not investigated. Such reactions would normally be expected to increase the rate of

pressure rise with increased time before ignition as well as to shorten the lag between the spark and the start of pressure rise. In order to explain the observed phenomena, it is necessary to postulate a preflame reaction that is detrimental to the flame reaction. If the presence of highly activated, unstable, intermediate compounds were ascertained, whose concentration decreased with time due to their short life, the reaction might be expected to proceed more slowly as the $T_s - T_i$ period was lengthened. Various investigators have suggested the primary formation of such intermediate compounds (reference 10) but their existence as well as their behavior remains a controversial point.

Injection of the fuel undoubtedly introduces some turbulence in the medium; this turbulence decreases with increase of time after injection. Turbulence has been found to increase the rate of reaction (reference 11 and reference 12, p. 243). In an engine the amount of turbulence set up by the injection of the fuel is negligible in comparison with the turbulence induced by the air intake and the piston movement. Were the effects of the variation in timing in the bomb to be attributed solely to turbulence, it would be necessary to view them as phenomena entirely unrelated to the effects of variation of the injection advance angle on the rate of combustion in the N. A. C. A. combustion apparatus (reference 2).

EFFECT OF TEMPERATURE

When discussing the effect of temperature on an explosive reaction, the initial temperature of the mixture must be clearly distinguished from the temperature of the explosive reaction, that is, the flame temperature. The initial temperature is primarily significant in the initial stages of the reaction, particularly when a liquid fuel is used and when heat transfer and vaporization are of importance. As a result, the temperature has a much greater influence on the heterogeneous reactions, that is, the reactions in which the spark occurs very shortly after injection, than on the homogeneous reactions with a completely vaporized fuel. The term "homogeneous" as used here is meant to eliminate the possibility of a heterogeneous liquid-gas reaction, not a reaction at the wall of the bomb.

Temperature does, nevertheless, affect the rates of the fuel-vapor-air explosions (delayed explosions) somewhat and also affects the maximum pressure attainable, owing to changes in the specific heats of gases with temperature. The calculations of maximum pressure attainable, based on the specific heats given by Lewis and Randall (reference 7) and on the heat of combustion (10,400 calories per gram at 30° C.) determined by the National Bureau of Standards, yield the following results for an air density of 5 atmospheres.

Temperature	P_{max}/P_i	
	Calculated	Experimental
°C.		
100	7.9	----------
150	7.0	6.2
200	6.3	5.7
250	5.8	5.3

Corrections have been made for the increase in the number of molecules on the assumption of complete combustion and for dissociation of carbon dioxide and water at the maximum temperature and pressure using Bjerrum's dissociation values (reference 12, p. 264) that check with the free-energy equations of Lewis and Randall (reference 7). After these computations were made, new values for thermodynamic quantities calculated from spectroscopic data were published (reference 13); the maximum pressures attainable were then recalculated using these values but the same results were obtained. Since the specific heats introduce an error of at least 10 percent in the calculations in addition to the error introduced by neglecting the heat loss, the experimental values obtained show good agreement with the calculated ones. The calculated values point out the variation to be expected with temperature.

It will be noted that for the explosions with short time intervals between injection and spark, the ratios of maximum to initial pressure fall far short of the theoretically attainable ones. For these explosions the ratio also increases slightly with temperature. These results are not surprising and merely indicate that distribution and vaporization play a significant part. The fact that density is much more effective than temperature in raising the P_{max}/P_i ratio may be correlated with the fact that density is much more effective than temperature in improving distribution. In the whole series the greatest effect of temperature occurs with a change from 100° to 150° C. at the lowest air density (5 atmospheres at 100° C.) where distribution is very poor. (See table I.)

It has already been observed that, regardless of the air density, no explosion would occur at 100° C. when the usual procedure of allowing 5 minutes to elapse between injection and spark was followed. It was thought that the vapor pressure of the fuel at this temperature might be too low, which would result in the formation of a mixture that was too lean to ignite. Calculations were made that yielded a value of 100 mm of Hg for the vapor pressure of hydrogenated safety fuel at 100° C. The calculations were based on empirical equations presented by Miss Elizabeth

Aldrich (paper presented at the S. A. E. summer meeting, 1932, entitled "The Vapor Pressures of Automotive Diesel Fuels"). If a molecular weight of 136 is assumed (this value corresponds to a formula $C_{10}H_{16}$ and agrees well with the percentage composition and lies in the correct boiling range for the pure hydrocarbons $C_{10}H_{22}$ and $C_{10}H_{14}$), the quantity of fuel that can be vaporized is 0.365 gram. This value corresponds to an air-fuel ratio of 23.3 at the highest density, which is beyond the value of 20.7 that marks the limit of ignition even at 200° C. Furthermore, the limit of ignition has been found to change with temperature, decreasing to 18.4 at 150° C., so that the possibility exists that at 100° C. a richer mixture than one with an air-fuel ratio of 15 would be required for ignition. From the vapor-pressure calculations it is seen that only at an absolute pressure of 5 atmospheres could a mixture richer than one with air/fuel= 15 be obtained; it was found that with an air-fuel ratio of 12.5 an explosion would occur with a delay period of 5 minutes at an initial temperature of 100° C.

Further calculations were made, using the equations given by Miss Aldrich, and it was found that at 150° C. approximately 1.5 grams of fuel could be vaporized in the bomb. A combustible mixture could therefore always be obtained at this temperature.

At temperatures of 150° C. or greater, ignition would take place with any time interval between injection and spark greater than 0.003 or 0.004 second. The effect of temperature on the maximum pressures and on the time of reaction was greater at the lower temperatures. Because of the contradictory data and the differences in experimental method of investigators in the field, it is difficult to interpret the significance of the effect of temperature. Mardles (reference 14) found an interesting correlation between the temperature coefficient of the nonflame oxidation and the knocking tendency of the fuel. A brief review of the effect of initial temperature found by other investigators will be found in reference 15.

EFFECT OF DENSITY

From physical considerations the most significant effect of air density is probably its influence on the distribution of the fuel. Lee (reference 16) has shown that the distribution of the fuel within the spray becomes more uniform as the density of the medium increases. The continued appearance of spots of deposited carbon on the walls of the bomb showed definitely that the sprays always impinged upon the walls; any increase in the density causing a corresponding decrease in the penetration would therefore improve the distribution throughout the bomb (reference 17).

Since the injection pressure is increased as the fuel quantity is increased, the atomization as well as the distribution is improved at the higher densities that correspond to the higher fuel quantities. The results are consistent with the expected improvement of distribution and atomization because a greater precentage of the total fuel is burned (higher P_{max}/P_i ratio) with increasing air density. The increased oxygen concentration at the higher densities would have no effect on the percentage of fuel burned, since the fuel concentration is increased to the same extent. The implication, however, is that the effect of the density on the distribution in the liquid phase caused the continual increase in the pressure ratios (P_{max}/P_i) for the explosions with short T_s-T_i periods. The ratio P_{max}/P_i for the delayed explosions decreased slightly as the density increased, which may be due to increased heat losses at the higher temperatures accompanying the higher pressures.

As the air density was increased, the time of reaction increased under certain conditions and decreased under others. For the delayed explosions the reaction time always increased with density. For the explosions with short T_s-T_i periods an increase in air density from 5 to 10 atmospheres caused a decided decrease in reaction time, again probably due to the influence of density on distribution in this range. At an initial temperature of 100° C. a further increase in density to 15 atmospheres caused a further decrease in reaction time but, at the higher temperatures, consistent with the general tendency to approach the behavior of the delayed explosions, the reaction time increased with further increase in density. In figure 8, the reaction time is plotted against the density for both types of explosion.

Fenning found both for methane-air explosions (reference 18) and for air-fuel-vapor (petrol, hexane, and benzene) explosions (reference 19) that the explosion time increased with density, just as it did in the present experimental work for the delayed explosions. In exploding CO-air mixtures at high initial pressures, Bone and Townend (reference 12, p. 282) noted a similar effect on the time of reaction as the initial pressure is increased. They offer an explanation of this phenomenon in the form of an energy-absorbing effect of nitrogen, which they claim is vitiated by the presence of hydrogen. This explanation, however, is not completely satisfying even for CO-air explosions and excludes hydrocarbon-air explosions in contradiction to Fenning's as well as to the present work.

AIR-FUEL RATIO

The difference between the vapor-air explosions and the liquid-vapor-air explosions is most clearly exhibited by the variation with air-fuel ratio of each type. For both types the air concentration was held constant.

In the homogeneous reactions (delayed explosions) the maximum pressure developed reached a maximum at an air-fuel ratio of 10. This maximum is beyond the theoretically correct mixture ratio of 15.6 and corresponds to an air-fuel ratio that is just sufficient to burn all the fuel to H_2O and CO. Dr. R. F. Selden, of this laboratory, has calculated the over-all energy of activation of the oxidation of safety fuel using the data at different air-fuel ratios. The calculations yielded a value of 31.1 kilogram-calories, which is of the correct order of magnitude.

The leanest mixture that will ignite varies with the temperature. As the limits of ignition are determined by the initial stage of the reaction, the initial temperature is a significant variable. The limits corresponded to air-fuel ratios of approximately 23, 21, 18.5, and 12.5 at temperatures of 250°, 200°, 150°, and 100° C., respectively.

When the fuel was ignited 0.004 second after injection, the air-fuel ratio varied from point to point in the bomb and only qualitatively may it be said that the air-fuel ratio increased as the fuel quantity increased. In the immediate neighborhood of the spark the mixture must have been richer than that indicated by ratio of the air and fuel quantities because ignition would occur with an apparent air-fuel ratio of 25. The true air-fuel ratio at the ignition limit for the vapor-air explosions was 21 under the same conditions (200° C., 6.3 atmospheres absolute pressure). On the other hand, ignition could not be effected at an apparent air-fuel ratio of 5, although the vapor-air mixtures would explode at this ratio.

As the fuel quantity was increased in the heterogeneous mixtures at 200° C., the maximum pressures developed upon explosion continuously increased and the time of reaction continuously decreased. The pressure rise per gram of fuel, however, decreased as the fuel concentration increased, probably because of poor distribution. The highest P_{max}/P_i ratio attained was 4.75 at an apparent air-fuel ratio of 7.5, but it is obvious that even in this case all the available oxygen was not consumed.

CONCLUSIONS

From the results obtained it must be concluded that the extent and rate of combustion of a fuel injected in the liquid state, particularly at low air temperatures and densities, are dependent upon the distribution and the condition of the fuel at the moment of ignition. At high air temperatures and densities, a marked similarity exists in the course of combustion of liquid fuel injected into the bomb and ignited immediately and that of a fuel allowed to vaporize completely before ignition.

Langley Memorial Aeronautical Laboratory,
National Advisory Committee for Aeronautics,
Langley Field, Va., *August 9, 1935.*

REFERENCES

1. Rothrock, A. M.: The N. A. C. A. Apparatus for Studying the Formation and Combustion of Fuel Sprays and the Results from Preliminary Tests. T. R. No. 429, N. A. C. A., 1932.
2. Rothrock, A. M., and Cohn, Mildred: Some Factors Affecting Combustion in an Internal-Combustion Engine. T. R. No. 512, N. A. C. A., 1934.
3. Rothrock, A. M., and Waldron, C. D.: Some Effects of Injection Advance Angle, Engine-Jacket Temperature, and Speed on Combustion in a Compression-Ignition Engine. T. R. No. 525, N. A. C. A., 1935.
4. Spanogle, J. A., and Foster, H. H.: Basic Requirements of Fuel-Injection Nozzles for Quiescent Combustion Chambers. T. N. No. 382, N. A. C. A., 1931.
5. Haslam, R. T., and Bauer, W. C.: Production of Gasoline and Lubricants by Hydrogenation. S. A. E. Jour., March 1931, pp. 307–314.
6. Schey, Oscar W., and Young, Alfred W.: Performance of a Fuel-Injection Spark-Ignition Engine Using a Hydrogenated Safety Fuel. T. R. No. 471, N. A. C. A., 1933.
7. Lewis, Gilbert Newton, and Randall, Merle: Thermodynamics. McGraw-Hill Book Co., Inc., 1923, p. 80.
8. Cragoe, C. S.: Thermal Properties of Petroleum Products. Misc. Publication No. 97, Bur. Standards, 1929.
9. Boerlage, G. D., and Van Dyck, W. J. D.: Causes of Detonation in Petrol and Diesel Engines. R. A. S. Jour., Dec. 1934, pp. 953–986.
10. Frey, F. E.: Pyrolysis of Saturated Hydrocarbons. Ind. & Eng. Chem., vol. 26, no. 2, Feb. 1934, p. 201.
11. Marek, L. F., and Hahn, Dorothy A.: The Catalytic Oxidation of Organic Compounds in the Vapor Phase. The Chemical Catalog Co., Inc., 1932, chap. XI.
12. Bone, William A., and Townend, Donald T. A.: Flame and Combustion in Gases. Longmans, Green & Co., Ltd., (London) 1927.
13. Lewis, Bernard, and von Elbe, Guenther: Heat Capacities and Dissociation Equilibria of Gases. Amer. Chem. Soc. Jour., vol. 57, 1935, pp. 612–614.
14. Mardles, E. W. J.: The Oxidation of Fuel Vapours in Air. Faraday Soc. Trans., vol. XXVII, Part II, Nov. 1931, pp. 681–721.
15. Brown, George Granger: The Relation of Motor Fuel Characteristics to Engine Performance. Dept. Eng. Research Bull. No. 7, Univ. Mich., May 1927.
16. Lee, Dana W.: Experiments on the Distribution of Fuel in Fuel Sprays. T. R. No. 438, N. A. C. A., 1932.
17. Joachim, W. F., and Beardsley, Edward G.: The Effects of Fuel and Cylinder Gas Densities on the Characteristics of Fuel Sprays for Oil Engines. T. R. No. 281, N. A. C. A., 1927.
18. Fenning, R. W.: Gaseous Combustion at Medium Pressures. Part I.—Carbon Monoxide-Air Explosions in a Closed Vessel. Part II.—Methane-Air Explosions in a Closed Vessel. R. & M. No. 998, British A. R. C., 1925.
19. Fenning, R. W.: Closed Vessel Explosions of Mixtures of Air and Liquid Fuel (Petrol, Hexane, and Benzene) over a Wide Range of Mixture Strength, Initial Temperature and Initial Pressure. R. & M. No. 979, British A. R. C., 1925.