REPORT No. 549

WIND-TUNNEL INVESTIGATION OF THE AERODYNAMIC BALANCING OF UPPER-SURFACE AILERONS AND SPLIT FLAPS

By Carl J. Wenzinger

SUMMARY

An investigation was made in the N. A. C. A. 7- by 10-foot wind tunnel to determine the effectiveness of various methods of reducing the high control forces of unbalanced upper-surface ailerons and of unbalanced split flaps. An unusual test installation was used in which a large-chord wing model was mounted on the regular balance between two large end planes. The tests included many different aileron-axis and flap-axis locations and several arrangements of aileron and flap slots, all on a Clark Y wing. In addition to the hinge moments, the rolling and the yawing moments as well as the lift and drag characteristics of the various arrangements were determined.

As a result of the investigation, a balanced split flap was developed that required control forces about half those of the unbalanced split flap when the balanced split flap was deflected to give approximately the same maximum lift. No entirely satisfactory arrangement of balanced upper-surface ailerons was found but one arrangement was developed that appeared satisfactory except for the stick-force characteristics with small aileron deflections at high angles of attack with the flaps neutral. Another arrangement also appeared satisfactory for all flight conditions except the lowest speeds obtainable with flaps neutral, in which case the indicated rolling moments were low.

INTRODUCTION

For a wing with full-span split flaps, the lateral control may be obtained by "upper-surface ailerons" formed by hinging the upper portion of the split trailing edge and deflecting it upward. Wind-tunnel tests (reference 1) of a wing equipped with such a device indicated that reasonably satisfactory control would be available below the stall with the flaps neutral and somewhat less satisfactory control with the flaps down for high lift.

The main disadvantage of upper-surface ailerons appears to be the high control force required for their operation in comparison with the forces required for similar ordinary ailerons having conventional movement (reference 2). The aileron characteristics are affected to a considerable extent by the deflected split flaps. The control forces required to operate the flaps are also very high (reference 3); their full deflection usually requires many turns of a crank.

The present tests were undertaken to determine the effectiveness of various methods of reducing the control forces required for both upper-surface ailerons and split flaps. The locations of the axes of the ailerons and the flaps were varied, and several arrangements of aileron and flap slots were investigated. The effects of the ailerons and flaps on the lift and drag of the wing were measured and the rolling and yawing moments were calculated.

MODELS AND APPARATUS

For the present tests it was desirable to use a wing model with a chord considerably longer than the 10-inch-chord models customarily used for tests in the 7- by 10-foot wind tunnel in order to enable easier modifications of the ailerons and flaps. A large-chord model of short span was therefore mounted between two end planes. With such an installation it was hoped to obtain approximately two-dimensional flow and so measure the section characteristics of the model under test.

The basic wing model of laminated mahogany was built to the Clark Y profile and was 20 inches in both span and chord. The full-span ailerons and flaps were also of laminated mahogany. Circular metal end plates 24 inches in diameter were fastened rigidly to the tips of the wing model with the centers of the plates located at the midchord point of the wing chord line. The ailerons and flaps were supported at each end by rods passing through holes in the end plates and were supported at their midspan by thin metal fixtures attached to the wing. The hinge-axis locations could be easily and quickly changed. The ailerons and flaps could either be locked at a desired deflection or be arranged to swing freely about any hinge axis.

The model was mounted at its 50-percent-chord point on the regular force-test tripod of the N. A. C. A. 7- by 10-foot open-throat wind tunnel. (See reference 4.) Two large wooden end planes were mounted so as to include the model and its end plates between them. (See fig. 1.) A circular cut-out in each end plane allowed the model to rotate freely; any contact between the end plates and the end planes was indicated by the flashing of a neon bulb.

Lift and drag forces were read directly on the regular wind-tunnel balances. Hinge moments were measured by the twist of a long calibrated slender steel rod connected at one end to the aileron or flap (free to swing) and at the other end to a clamp with pointer and dial outside the air stream.

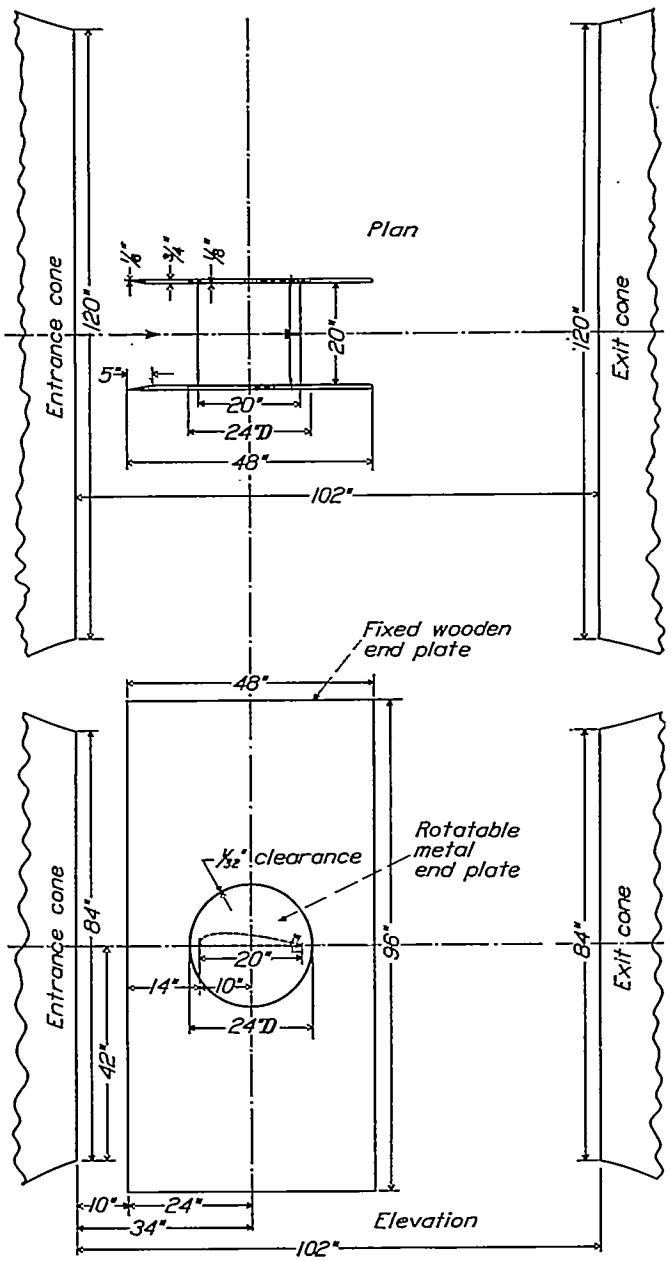

FIGURE 1.—Wind-tunnel installation of wing model between end planes.

METHODS

GENERAL TEST CONDITIONS

The tests all were made at a dynamic pressure of 16.37 pounds per square foot corresponding to an air speed of 80 miles per hour under standard sea-level conditions. The average Reynolds Number, based on the test air speed and on the wing chord, was 1,218,000 (twice that of the tests usually made in the 7- by 10-foot wind tunnel). The angles of attack ranged, in general, from 0° to 25°; the aileron and flap deflections ranged in most cases from neutral to 90° up and 90° down.

PRELIMINARY TESTS

Air-flow surveys.—Dynamic-pressure surveys were made between the end planes at the model location to obtain a calibration for use with the static reference pressure plates of the wind tunnel. The wing model was removed for these tests, and the metal end plates were attached rigidly to the wooden end planes. The dynamic-pressure distribution between the planes was found to be satisfactory, and a static-pressure survey was then made along the jet center line. The static pressure showed a considerable gradient along that portion of the jet occupied by the model and this condition was taken into account by making a suitable correction to the measured drag.

Tare forces.—It was necessary to determine the tare forces due to the metal end plates in order to obtain the net forces. One series of tests was therefore made with the end plates attached to the wing equipped with an unbalanced split flap, the tests being made with flap both neutral and down 60°. Another series of tests was made with the end plates supported on the balance, the wing being in place but supported separately, flap both neutral and down 60° and a small gap being maintained between the wing and the end plates. The difference between the measured forces for the two series of tests gave the tare forces due to the plates. The greatest effect was on the drag, in which case the tare forces amounted to about 75 percent of the minimum drag of the plain airfoil.

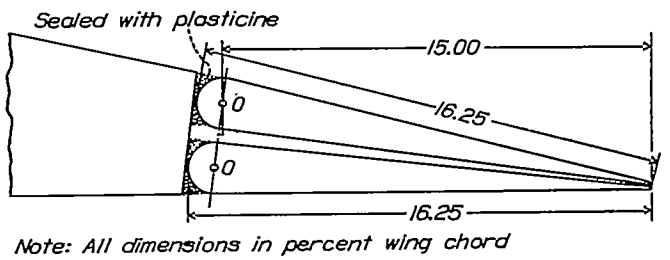

FIGURE 2.—Unbalanced upper-surface aileron and unbalanced split flap.

A few tests were made with and without the thin metal fittings used to support the aileron and flap at midspan. As the results showed no consistent differences, the effect of the fittings was considered to be negligible.

Comparison of two-plane installation and standard wind-tunnel tests.—Tests were made to obtain a comparison between the results from the two-plane installation and the usual wind-tunnel results from rectangular wings in the free jet. The Clark Y wing with 0.15*c* unbalanced upper-surface ailerons and 0.15*c* unbalanced split flap was used as the basis for comparison. (See fig. 2.) The gaps between the wing and the aileron and between the wing and the flap were kept sealed for all tests with this arrangement because other tests had

shown that any gap produced an adverse effect on the aerodynamic characteristics.

The hinge moments of the aileron are compared in figure 3 with those for a full-semispan unbalanced upper-

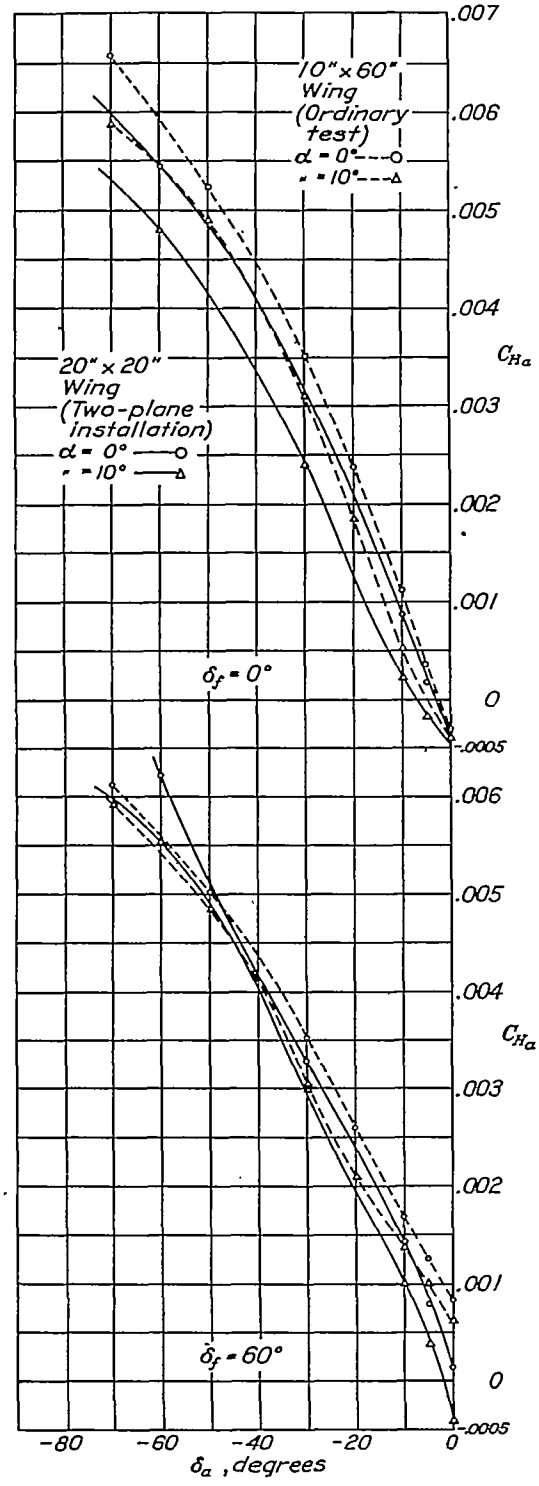

FIGURE 3.—Aileron hinge-moment coefficients obtained with two-plane installation and with ordinary wind-tunnel test. 0.15c by 1.00 b/2 unbalanced upper-surface aileron on wing with flap neutral and down 60°.

surface aileron on a wing of aspect ratio 6. The data for the tests of aspect ratio 6 were converted from data in reference 1 for a partial-semispan aileron. In general, the agreement is fair and is better for the conditions with a split flap deflected for maximum lift than for the flap neutral.

Lift and drag coefficients of wings with unbalanced split flaps as obtained in the two types of wind-tunnel test installation are shown in figure 4. (Data for tests of the wing of aspect ratio 6 are from reference 1.) None of these data were corrected for effects of the jet boundaries, but corrections were applied for tares and for the effect of the static-pressure gradient. The static-pressure gradient produces an additional downstream force on the models, corresponding to values of ΔC_D of 0.0015 and of 0.009 on the small- and large-chord wings, respectively. The values of this correction were obtained in accordance with the methods given in reference 5.

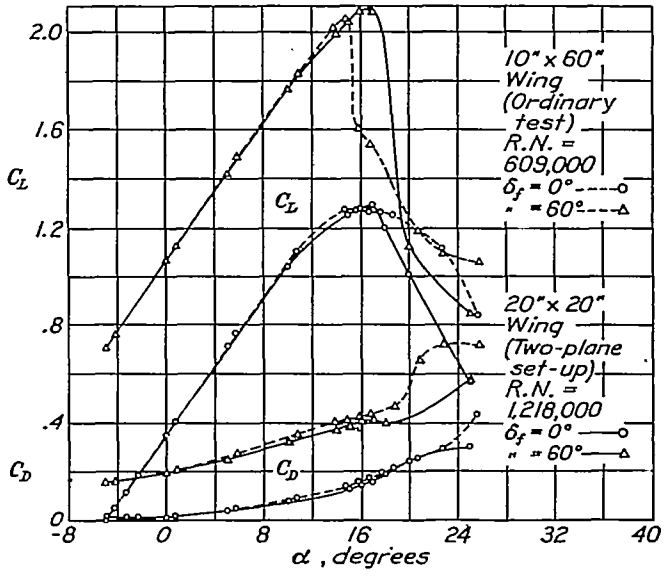

FIGURE 4.—Comparison of lift and drag coefficients of wings with 0.15c full-span unbalanced split flaps for two types of wind-tunnel test. (Uncorrected for effects of jet boundaries.)

The maximum lift coefficients are about the same with either test arrangement for the two conditions of flaps neutral or deflected. In addition, the lift curves are almost identical up to the stall. The drag curves diverge slightly in the region from zero to maximum lift, the values for the wing in the two-plane installation being the lower ones.

Agreement of the lift and drag curves for the two types of test without corrections for tunnel effects or reduction to a common aspect ratio was unexpected, and the fact that the lift curves did agree closely could only be regarded as a coincidence. In order to determine whether the data from the two types of test could be corrected to a common aspect ratio, the data given in figure 4 for the flap-neutral conditions were corrected for tunnel effects and reduced to infinite aspect ratio

for comparison. The standard jet-boundary corrections,

$$\Delta\alpha=\delta\frac{S}{C}C_L\times 57.3, \text{ degrees}$$

$$\Delta C_D=\delta\frac{S}{C}C_L^2$$

where S is the total wing area, and C the jet cross-sectional area, were applied to the results for the 10- by 60-inch wing. A theoretical value of $\delta=-0.165$ (reference 6) was taken as most nearly representative of the boundary effect in the 7- by 10-foot wind tunnel.

The induced angle of attack and induced drag coefficient

$$\alpha_i=-\frac{C_L}{\pi R}(1+\tau)\times 57.3, \text{ degrees}$$

$$C_{D_i}=-\frac{C_L^2}{\pi R}(1+\sigma)$$

were calculated for the rectangular wing of aspect ratio 6 using values of $\tau=0.179$ and $\sigma=0.054$.

The results of the 20- by 20-inch wing in the two-plane installation were corrected for the downward deflection of the jet behind the wing and for the induced curvature of the flow in the neighborhood of the wing. (See reference 5.) In this case

$$\Delta\alpha=-\left[\left(0.25\frac{c}{h}C_L\right)+\frac{\pi}{12}\left(\frac{c}{h}\right)^2\left(\frac{C_L}{2}+C_{m0}\right)\right]\times 57.3, \text{ degrees}$$

$$\Delta C_D=-0.25\frac{c}{h}C_L^2$$

where c is the wing chord.

h is the height of the jet.

C_{m0} is the pitching-moment coefficient at zero lift.

Lift coefficients against angle of attack for infinite aspect ratio and profile-drag coefficients against lift coefficients are plotted in figure 5. The slope of the lift curve for the wing tested between end planes is not quite so great as that of the rectangular wing tested in the free jet. Over the straight portion of the lift curve (up to a lift coefficient of about 1.0) the slopes are respectively 0.096 and 0.101 per degree. The profile-drag coefficients show a good agreement over the same range of lift coefficients, the values for the wing between end planes being slightly lower.

The comparisons made indicate that two-dimensional flow conditions are closely approximated for the wing between end planes. Consequently, the test data may be corrected to any aspect ratio desired and comparisons made with other wind-tunnel tests with a reasonable degree of accuracy.

CALCULATION OF COEFFICIENTS

Because of the close agreement between the results from the two types of wind-tunnel test, it was possible to calculate the coefficients from the two-plane tests without applying jet-boundary corrections and to have the results comparable with those from wings of aspect ratio 6 ordinarily tested in the 7- by 10-foot tunnel. The measured lift and drag data were therefore not corrected for boundary effects but the corrections were applied for the effect of the longitudinal static-pressure gradient in the tunnel jet and for the tares due to the metal end plates.

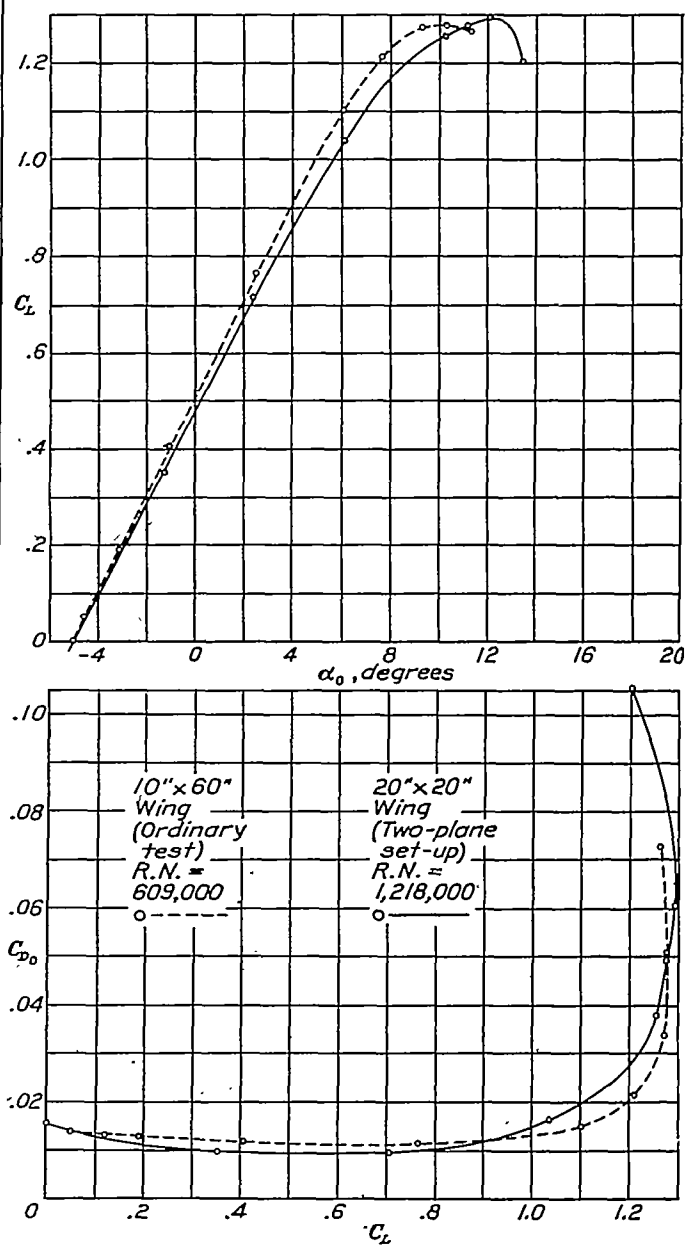

FIGURE 5.—Comparison of lift and profile-drag coefficients of wings with unbalanced split flaps neutral for two types of wind-tunnel test. (Corrected to infinite aspect ratio.)

The results are given in the form of absolute coefficients:

Hinge-moment coefficient,

$$C_H=\frac{H}{qcS}$$

where H is the moment of a semispan aileron, or of a full-span flap, about the hinge axes, and q is the

dynamic pressure. Lift and drag coefficients are, as usual, C_L and C_D.

Rolling-moment and yawing-moment coefficients about the wind axes C_l' and C_n' were calculated for a semispan aileron on a wing of aspect ratio 6, utilizing methods described in references 7 and 8. The rolling-moment coefficient

$$C_l'=\frac{1}{2}\left(R\zeta\frac{1}{\frac{dC_L}{d\alpha}}\Delta C_L\right)$$

where ζ depends upon the proportion of the semispan covered by the aileron.

$\frac{dC_L}{d\alpha}$ is the actual slope of the lift curve.

ΔC_L is the change in lift due to deflecting the aileron at a given angle of attack.

The yawing-moment coefficient is the sum of two coefficients, an induced yawing-moment coefficient and a profile yawing-moment coefficient, $C_n'=C_{n_i}'+C_{n_p}'$. The induced yawing-moment coefficient

$$C_{n_i}'=-\mu C_l'\ C_L$$

where μ depends upon the proportion of the semispan covered by the aileron.

C_l' is the rolling-moment coefficient computed as previously explained.

C_L is the given lift coefficient.

The profile yawing moment

$$N_p=\zeta\Delta C_{D_0}qbS$$

and the coefficient

$$C_{n_p}'=\zeta\Delta C_{D_0}$$

where ζ depends upon the proportion of the semispan covered by the aileron.

ΔC_{D_0} is the change in profile drag produced by deflecting the aileron at a given lift.

DEVELOPMENT OF BALANCED UPPER-SURFACE AILERONS AND BALANCED SPLIT FLAPS

UNBALANCED UPPER-SURFACE AILERON AND UNBALANCED SPLIT FLAP

The combination of unbalanced upper-surface aileron and unbalanced split flap (fig. 2) is used as the basic arrangement for comparison with all the ailerons and flaps tested. Rolling-, yawing-, and hinge-moment coefficients of the unbalanced upper-surface aileron are given in figure 6 with the split flap neutral and in figure 7 with the flap down 60°. Lift and drag coefficients for the wing with unbalanced split flap are given in figure 8. Maximum lift coefficients, drag coefficients and ratios of L/D at maximum lift, and hinge-moment coefficients for different deflections of the unbalanced split flap are given in figure 9.

BALANCED UPPER-SURFACE AILERON AND BALANCED SPLIT FLAP

Slot arrangement 1 (fig. 10).—An airfoil section was used for both ailerons and flaps thoughout the tests of the balancing arrangements. (See table I.) The ailerons and flaps using this section were of the same size in plan form as the unbalanced upper-surface ailerons and the unbalanced split flaps.

The first slot arrangement tested of balanced upper-surface aileron and balanced split flap with a slot for each is shown dotted in figure 10. The flap was kept neutral for the series of tests with this arrangement. Only hinge moments were measured for the aileron with the different axis locations shown in figure 10. These locations were so chosen that, when the axis was moved back for balancing, the nose of the aileron would just clear the flap during deflection of the aileron.

The results of these tests indicated that the aileron axis should be about 30 percent of the aileron chord back from the leading edge of the aileron for any considerable reduction of the aileron hinge moment. This location requires that the aileron axis be about 60 percent of the aileron chord out from the upper surface because of the geometrical arrangement of aileron, flap, and slot (axis A12).

Slot arrangement 2 (figs. 10 and 11).—Slot arrangement 2, shown by the solid outline in figure 10, differs from arrangement 1 in that the aileron and flap have smaller slots. Aileron characteristics were determined for axis locations A8, A12, and A14 (flap neutral). As no appreciable differences were found between the hinge moments for the two slot arrangements, arrangement 2 was used for further tests because of the smaller slots.

The lift and the drag of the wing, and the hinge moments of the flap, were next measured with the flap deflected about axis locations F1, F12, and F14. The most promising characteristics were obtained with the flap deflected 60° about axis F12.

The aileron characteristics were then determined for axis location A12 with the flap deflected 60° about axis location F12. The results were not satisfactory because the hinge moments of the aileron were considerably overbalanced at the low deflections and the indicated rolling moments were in the wrong direction at moderately high angles of attack. Both of these conditions required improvement.

In order to improve the low lifts produced by the flap with slot arrangement 2, the open aileron slot was completely sealed with plasticine. Measurements of maximum lift were made with the flap deflected different amounts at axis locations F8, F12, and F14. The results with aileron slot open and sealed are plotted in figure 11. It will be noted that a large improvement was obtained with the aileron slot sealed and only the flap slot open. This balanced split flap produced a somewhat higher maximum lift than the unbalanced split flap. For the further arrangements of balanced

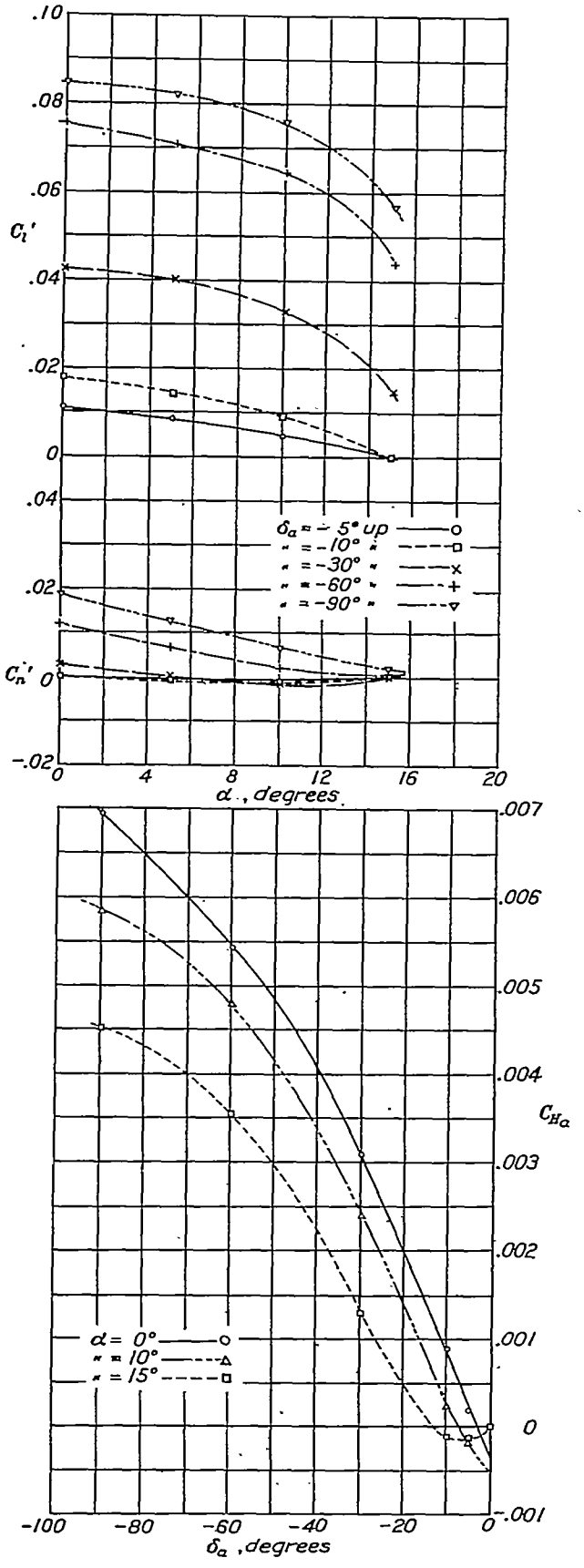

FIGURE 6.—Rolling-, yawing-, and hinge-moment characteristics of unbalanced upper-surface aileron. Flap neutral.

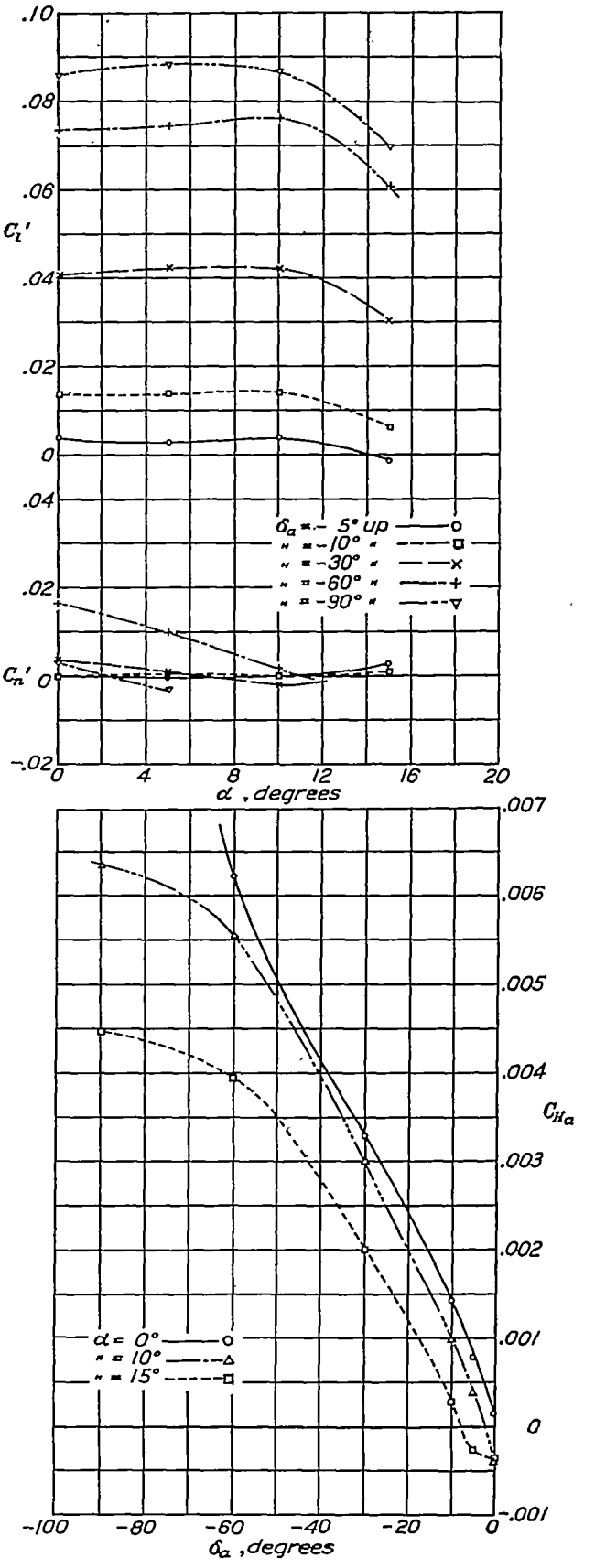

FIGURE 7.—Rolling-, yawing-, and hinge-moment characteristics of unbalanced upper-surface aileron. Flap down 60°.

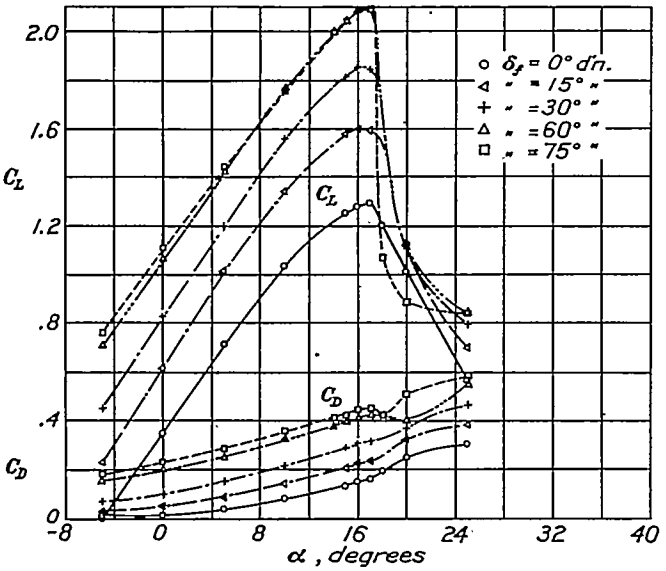

FIGURE 8.—Lift and drag coefficients for wing with unbalanced split flap.

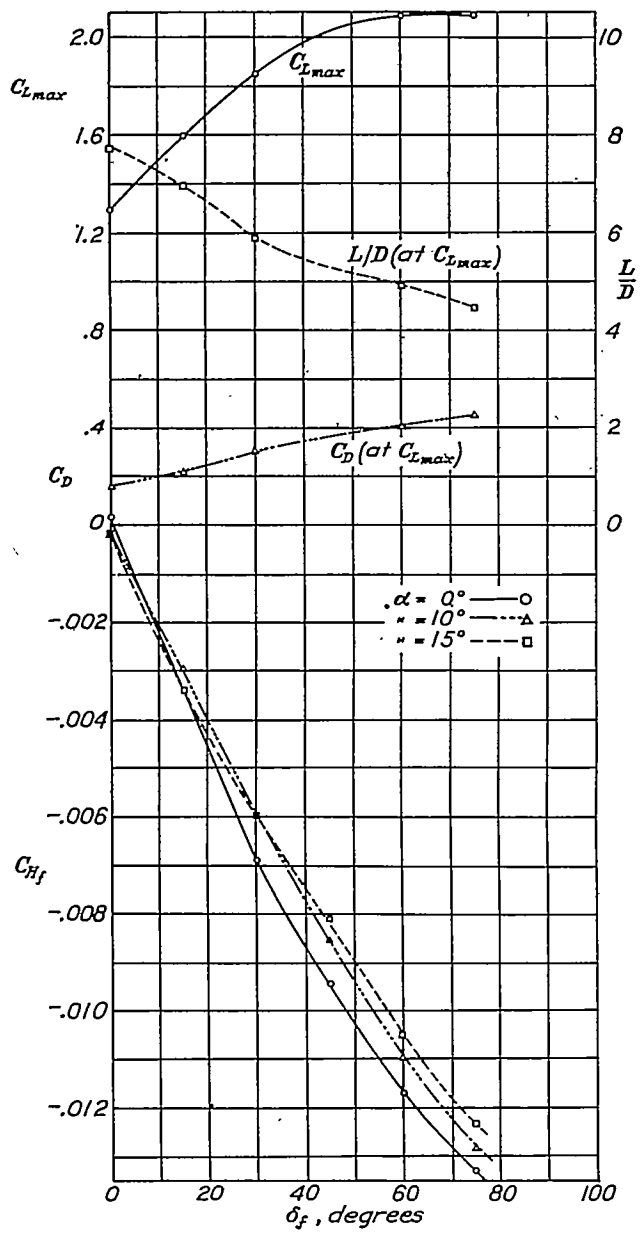

FIGURE 9.—$C_{L_{max}}$, C_D and L/D at $C_{L_{max}}$, and C_H for different deflections of unbalanced split flap.

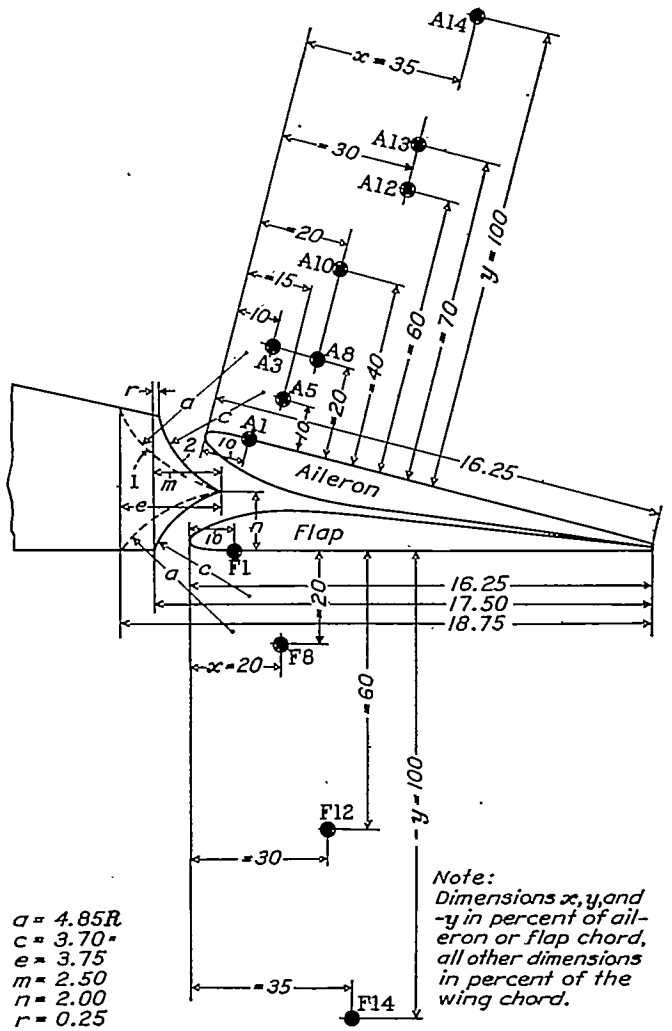

FIGURE 10.—Balanced upper-surface aileron and balanced split flap. Slot arrangements 1 and 2 with aileron and flap axes tested.

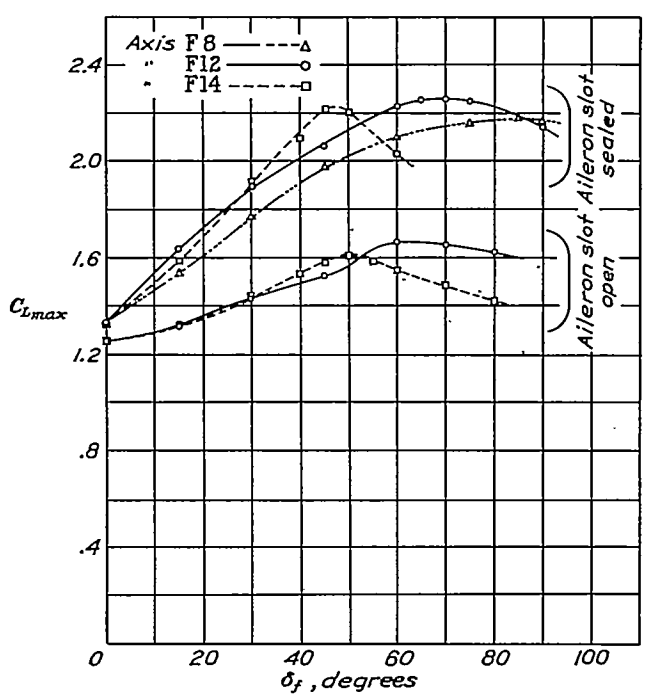

FIGURE 11.—Effect on $C_{L_{max}}$ with aileron slot open and sealed. Balanced split flap at different axis locations.

upper-surface ailerons and split flaps with slots the aileron slot was therefore kept sealed to as great an extent as was practicable when the aileron was neutral.

Slot arrangement 3 (figs. 12 to 20).—Slot arrangement 2 was changed to arrangement 3 (fig. 12) because it was desired to retain the high maximum lifts obtained with a closed aileron slot, and it was thought that the overbalance of the aileron could be improved at the same time. The flap characteristics were obtained at axis locations F1, F8, and F12. The most promising locations on the basis of high lift and low hinge moments were F8 and F12, although the flap-hinge moments were somewhat erratic beyond 35° deflection at axis location F12.

The aileron characteristics were then determined for axis locations A12 and A8 with the flap deflected 60°

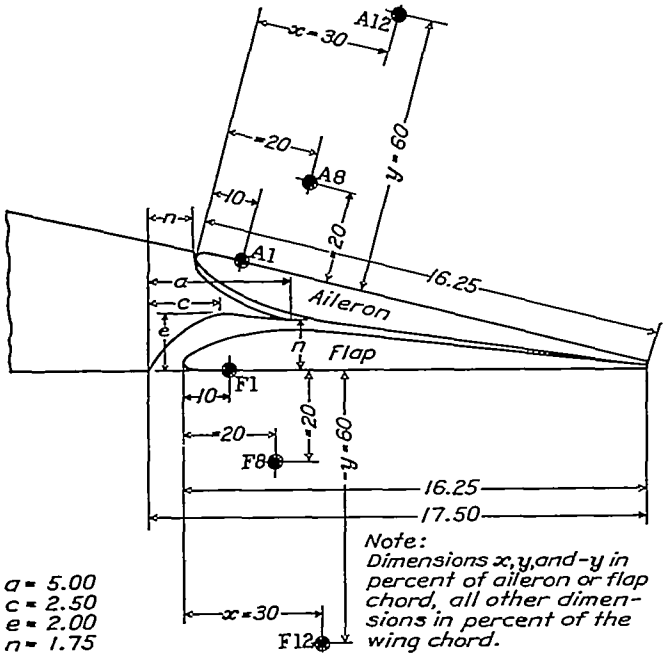

FIGURE 12.—Balanced upper-surface aileron and balanced split flap. Slot arrangement 3 with aileron and flap axes tested.

about axis location F12. The results of these tests (figs. 13, 14, 15, and 16) showed only a slight improvement in the aileron hinge-moment overbalance. The rolling- and yawing-moment characteristics, however, appeared to be very good for the aileron-axis locations tested with the flap deflected, the indicated rolling moments being much greater than for the flap-neutral condition.

The aileron characteristics were also determined for several axis locations with the flap both neutral and deflected about axis location F8. The results for axis location A8 are given in figure 17 and for axis location A12, in figure 18. It will be seen that with aileron axis location A12, flap deflected about axis location F8, the aileron hinge moments are satisfactory up to the stall. The indicated rolling moments, however, are somewhat lower with this arrangement than with the flap deflected about axis location F12.

The similarity of the hinge-moment curves of the balanced upper-surface aileron at axis location A12 (fig. 14) with flap deflected about axis location F12 to those of ordinary ailerons indicated that the overbalanced hinge moments could probably be overcome by rigging the ailerons up 10° for neutral and using a differential deflection. In this manner the favorable rolling- and yawing-moment characteristics for axis location A12 would be retained without overbalance of the aileron hinge moments.

The aileron was then rigged up 10° at several axis locations, and the effect on the flap characteristics was measured. The results for the flap at axis location F8 with the aileron rigged up 10° at axis location A8 are given in figure 19 and for similar conditions but with the respective axes F12 and A12, in figure 20. The effect of rigging the aileron up 10° was mainly a reduction in the maximum lift and in the drag at maximum lift. Hinge moments of the flap were practically unaffected.

Slot arrangement 3A (figs. 21 to 25).—Because rigging the aileron up 10° for neutral with slot arrangement 3 left a break in the wing upper surface, that arrangement was modified as 3A having no sharp break in the upper surface. (See fig. 21.) This modification was accomplished by raising the aileron bodily for its neutral position and by changing the slot shape somewhat. A new axis location was then used for the aileron because of the geometrical arrangement. The object was to keep the aileron and flap axes as close to the surface as possible and still obtain low hinge moments, together with other favorable characteristics.

With the aileron rigged up 10° for neutral at axis location A9, the flap characteristics were obtained for the flap at axis locations F1, F8, and F12. The flap at axis location F8 appeared to be the most promising of these three, and it was noted that, because of the geometrical arrangement, a similar reduction in flap-hinge moments would be possible with an axis the same distance back from the flap nose but closer to the surface. The flap characteristics were then measured at this new axis location, F6.

Aileron characteristics of the balanced upper-surface aileron at axis location A9 are given in figure 22 with the split flap neutral and in figure 23 with the flap deflected 60° about axis location F6. The indicated rolling and yawing moments appear to be satisfactory, and no overbalance of aileron hinge moments occurs up to the stall. Lift and drag coefficients for the wing with balanced split flap at axis location F6 are given in figure 24. Maximum lift coefficients, drag coefficients and ratios of L/D at maximum lift, and hinge-moment coefficients for different deflections of the balanced split flap are given in figure 25.

Slot arrangement 4 (fig. 26).—A short series of tests was made with slot arrangement 4 to determine the effect of closing the flap slot in a manner similar to that

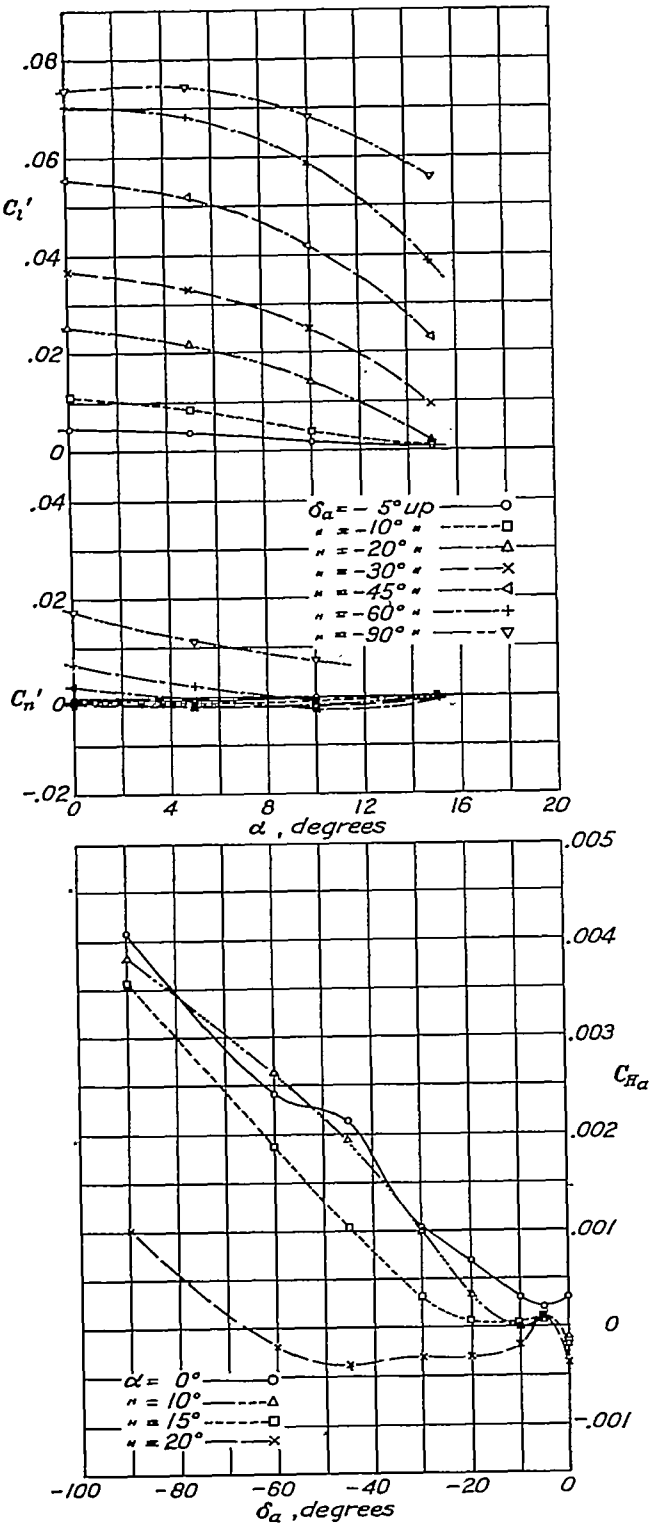

FIGURE 13.—Rolling-, yawing-, and hinge-moment characteristics of balanced upper-surface aileron at axis A12. Flap neutral. Slot arrangement 3.

in which the aileron slot had been closed but leaving the aileron slot open. With the aileron slot open a low maximum lift was again produced by the flap. The aileron characteristics were practically the same as those obtained with slot arrangement 3. Since slot arrangement 4 possessed no particular advantages for

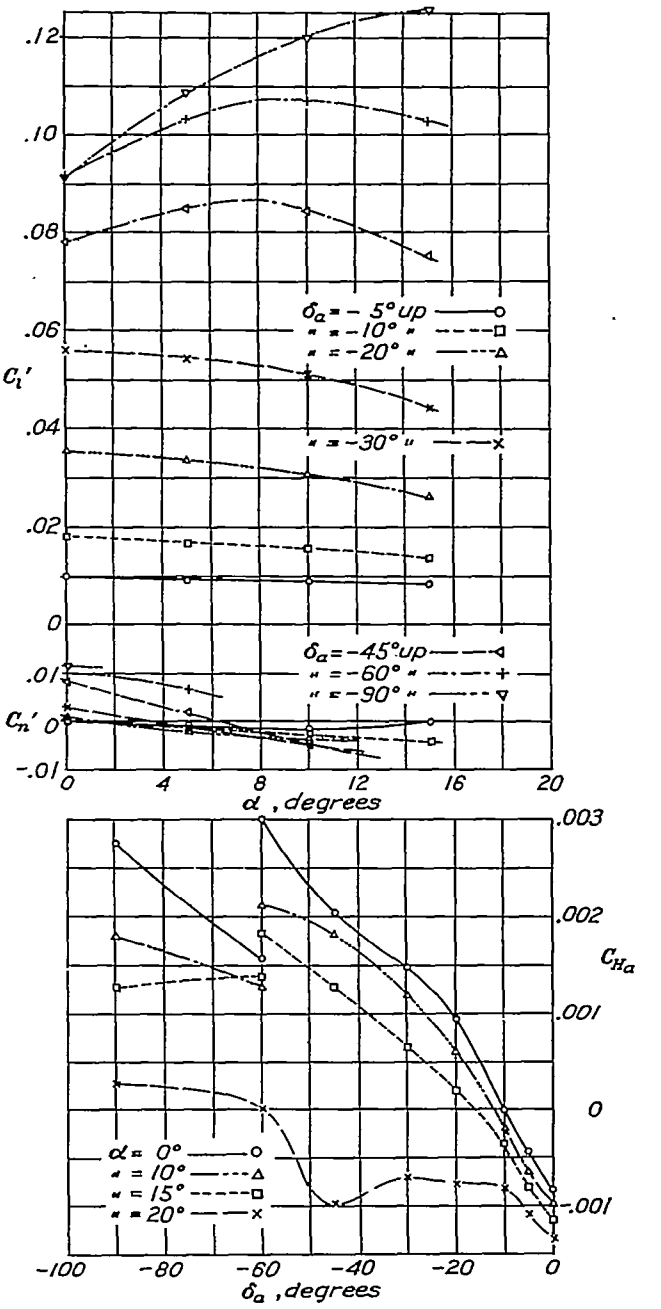

FIGURE 14.—Rolling-, yawing-, and hinge-moment characteristics of balanced upper-surface aileron at axis A12. Flap down 60° at flap axis F12. Slot arrangement 3.

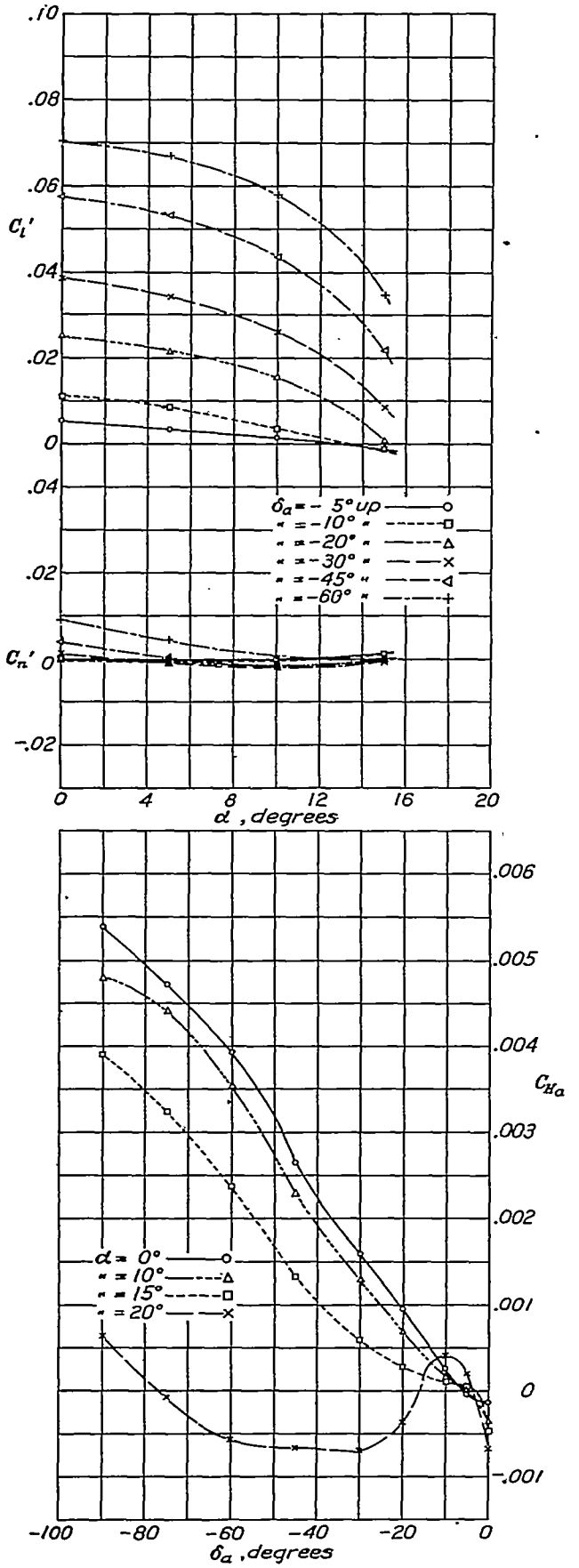

FIGURE 15.—Rolling-, yawing-, and hinge-moment characteristics of balanced upper-surface aileron at axis A8. Flap neutral. Slot arrangement 3.

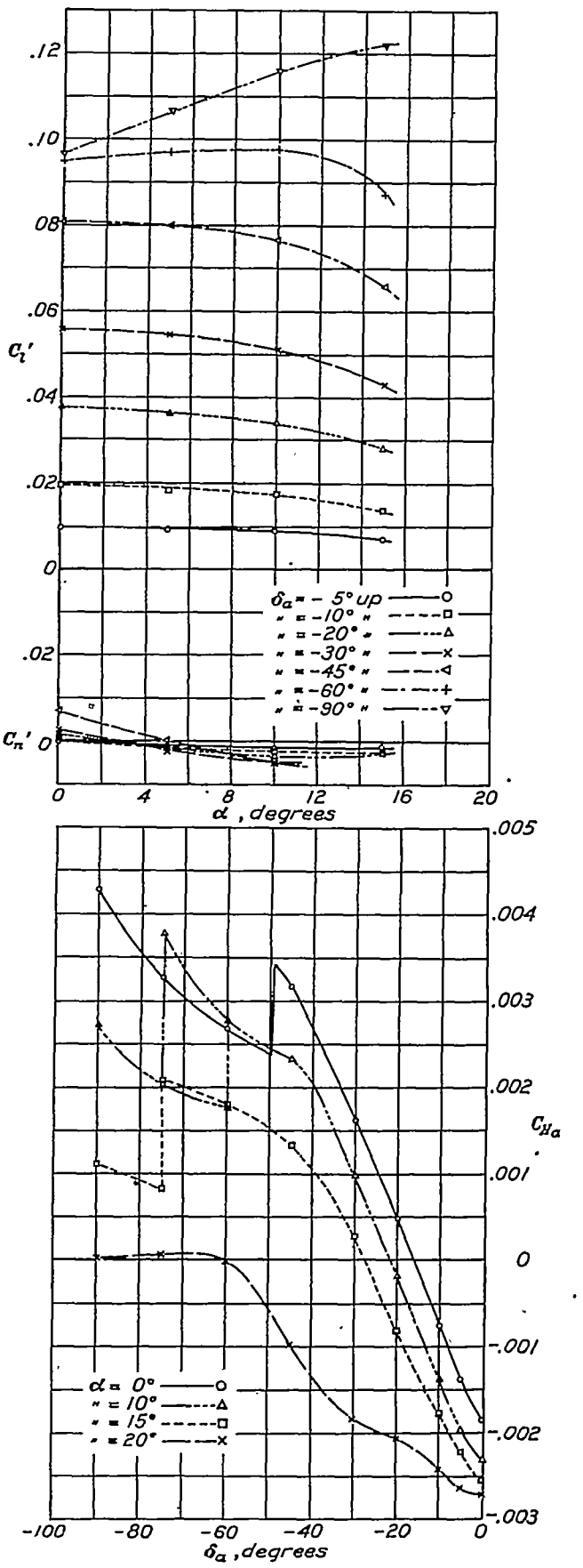

FIGURE 16.—Rolling-, yawing-, and hinge-moment characteristics of balanced upper-surface aileron at axis A8. Flap down 60° at flap axis F12. Slot arrangement 3.

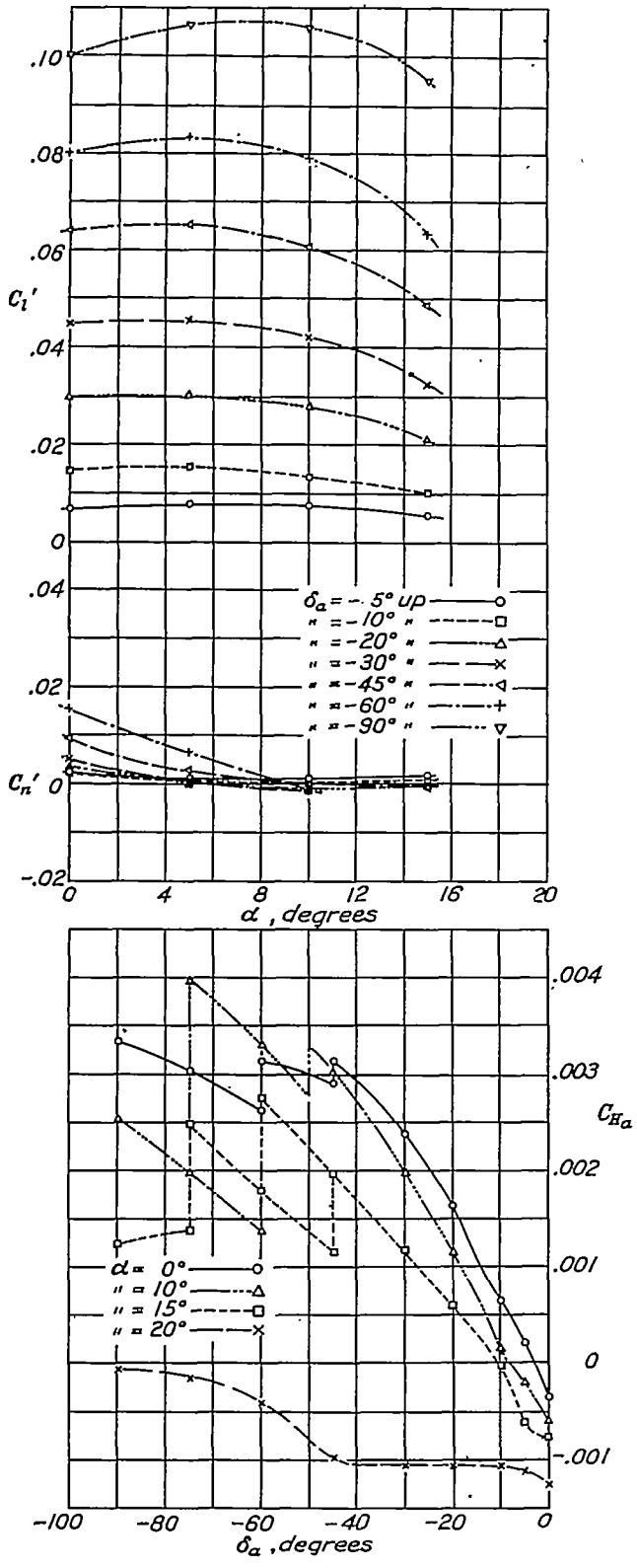

FIGURE 17.—Rolling-, yawing-, and hinge-moment characteristics of balanced upper-surface aileron at axis A8. Flap down 75° at flap axis F8. Slot arrangement 3.

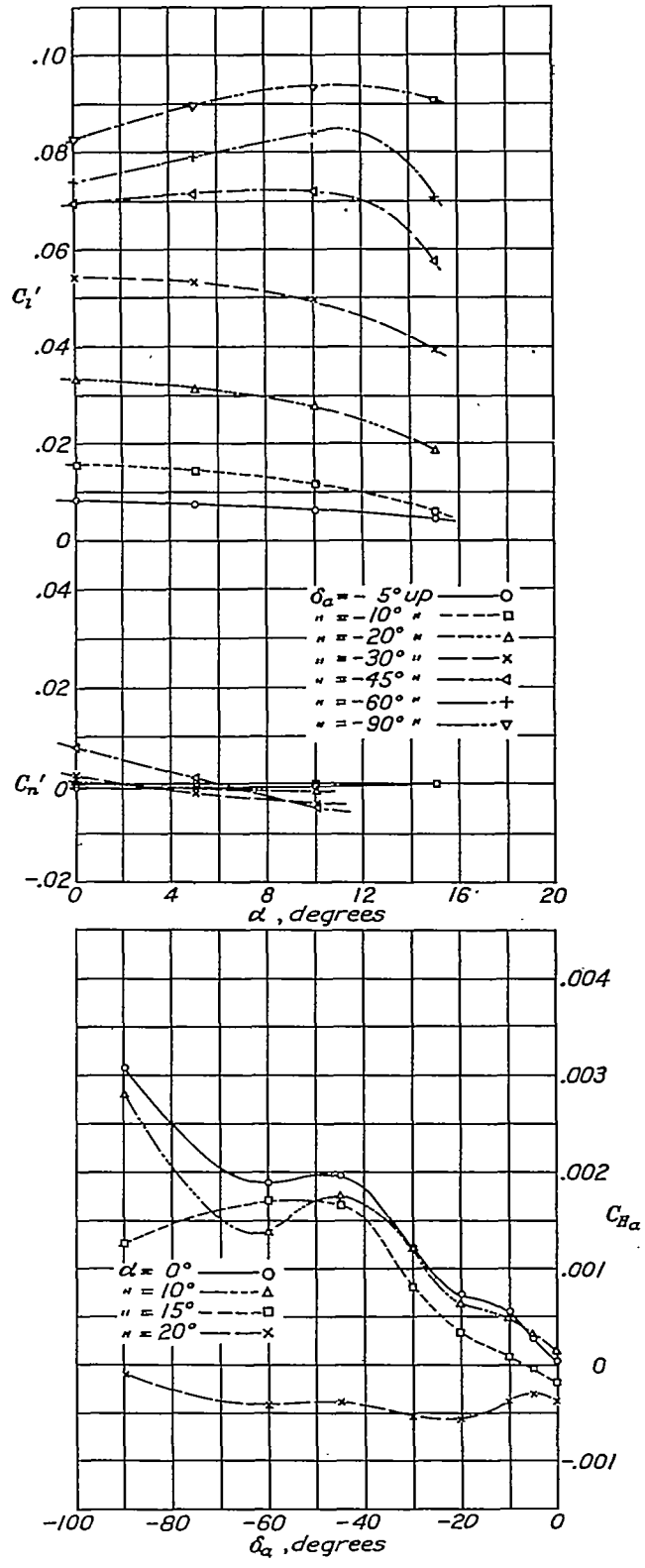

FIGURE 18.—Rolling-, yawing-, and hinge-moment characteristics of balanced upper-surface aileron at axis A12. Flap down 75° at flap axis F8. Slot arrangement 3.

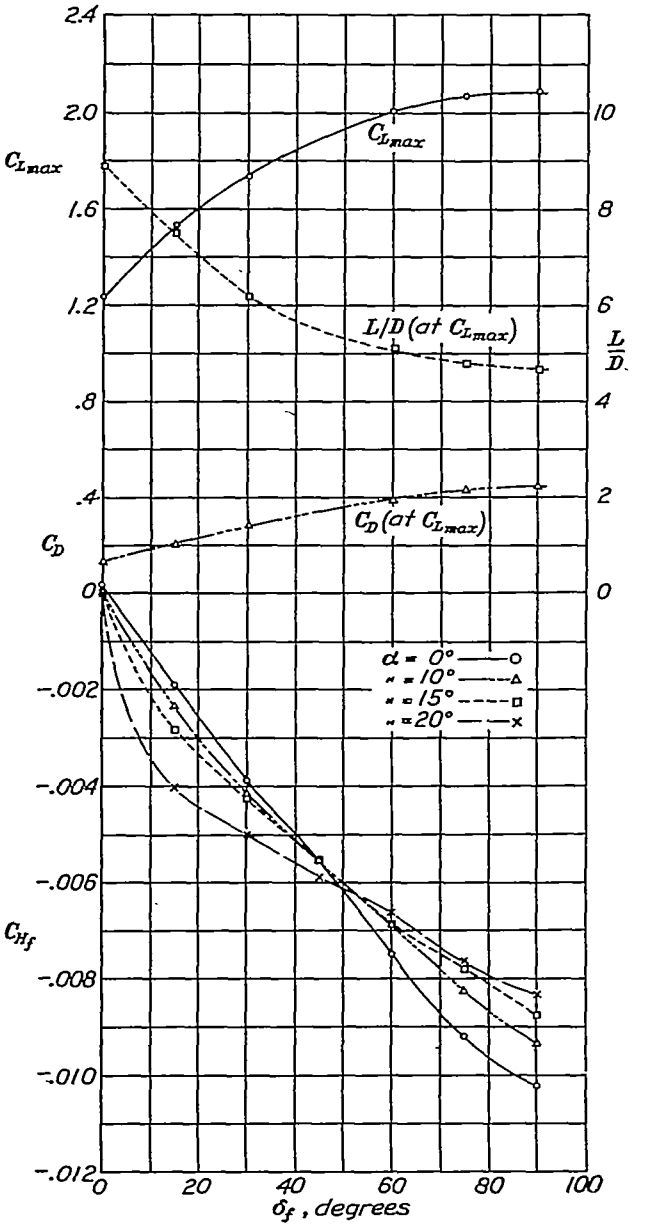

FIGURE 19.—$C_{L_{max}}$, C_D and L/D at $C_{L_{max}}$, and C_H for different deflections of balanced split flap at axis F8. Aileron rigged up 10° at aileron axis A8. Slot arrangement 3.

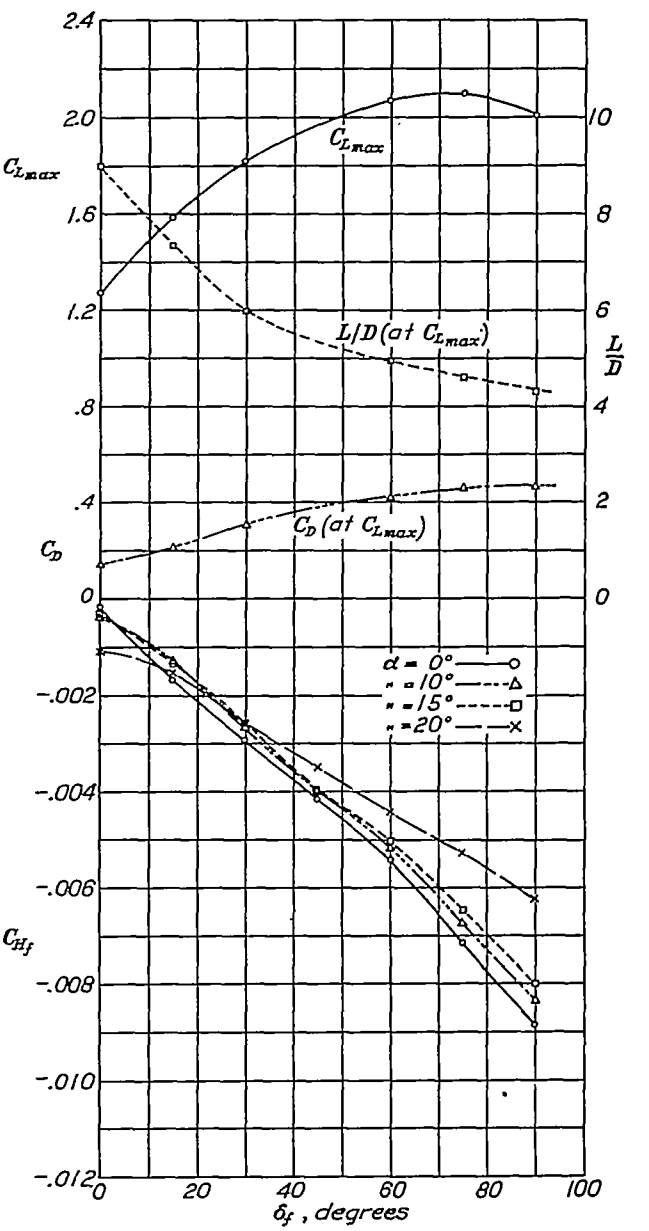

FIGURE 20.—$C_{L_{max}}$, C_D and L/D at $C_{L_{max}}$, and C_H for different deflections of balanced split flap at axis F12. Aileron rigged up 10° at aileron axis A12. Slot arrangement 3.

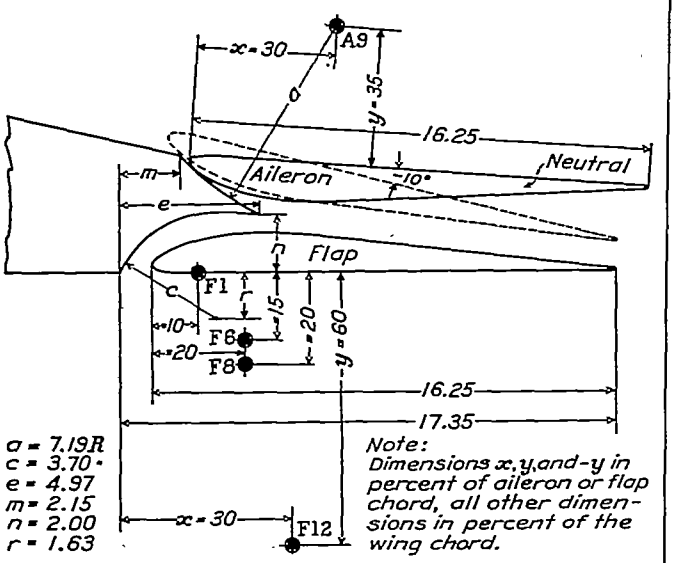

FIGURE 21.—Balanced upper-surface aileron rigged up 10° and balanced split flap. Slot arrangement 3A with aileron and flap axes tested.

the aileron and was detrimental to the maximum lift, tests were discontinued.

The range of balancing upper-surface ailerons now appeared to have been sufficiently well covered but it seemed desirable to make a few additional tests further to decrease the flap hinge moments and possibly to increase the flap effectiveness.

BALANCED SPLIT FLAP

Slot arrangement 5 (figs. 27 to 29).—The slot and balanced split-flap arrangement shown in figure 27 was obtained by disregarding the upper-surface aileron and making the wing upper surface solid and continuous. Axis location F6 again gave the greatest reduction in flap hinge moments without locating the axis a considerable distance out from the surface.

Lift and drag coefficients for the wing with the balanced split flap at axis location F6 are given in

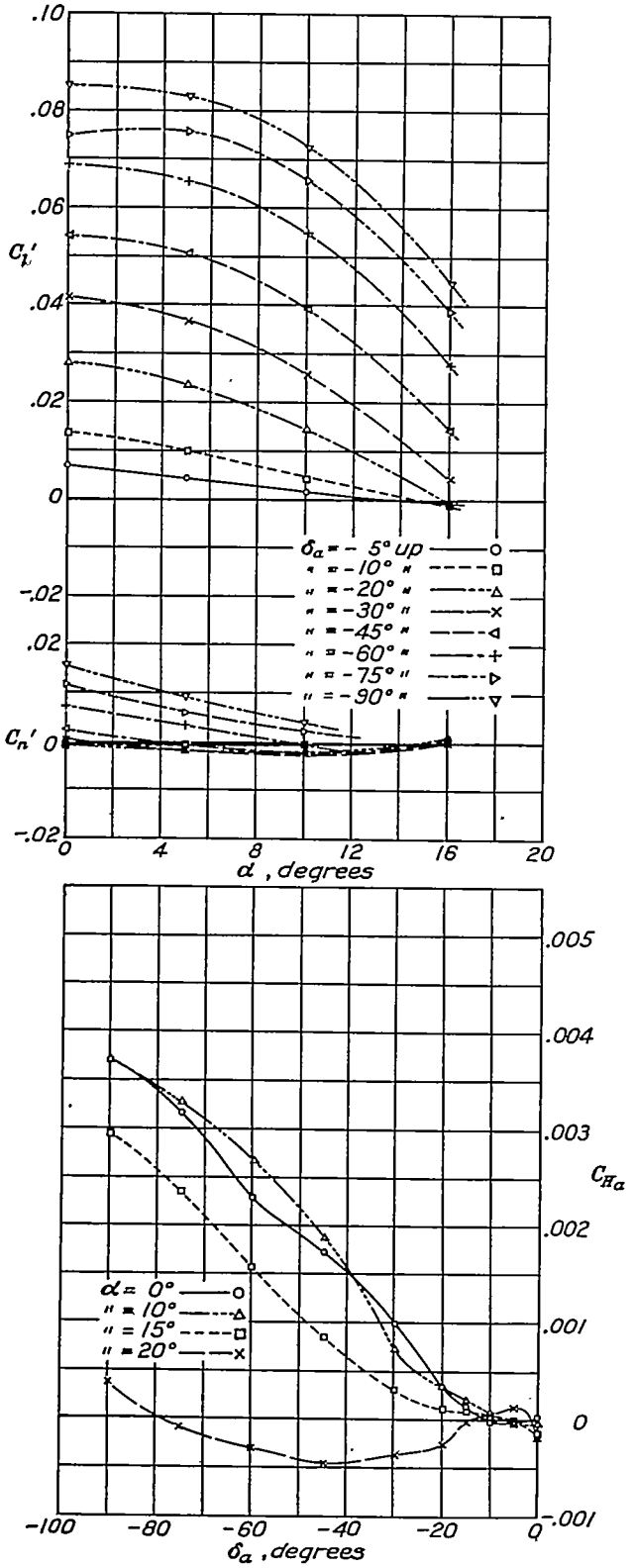

FIGURE 22.—Rolling-, yawing-, and hinge-moment characteristics of balanced upper-surface aileron at axis A9. Flap neutral. Slot arrangement 3A.

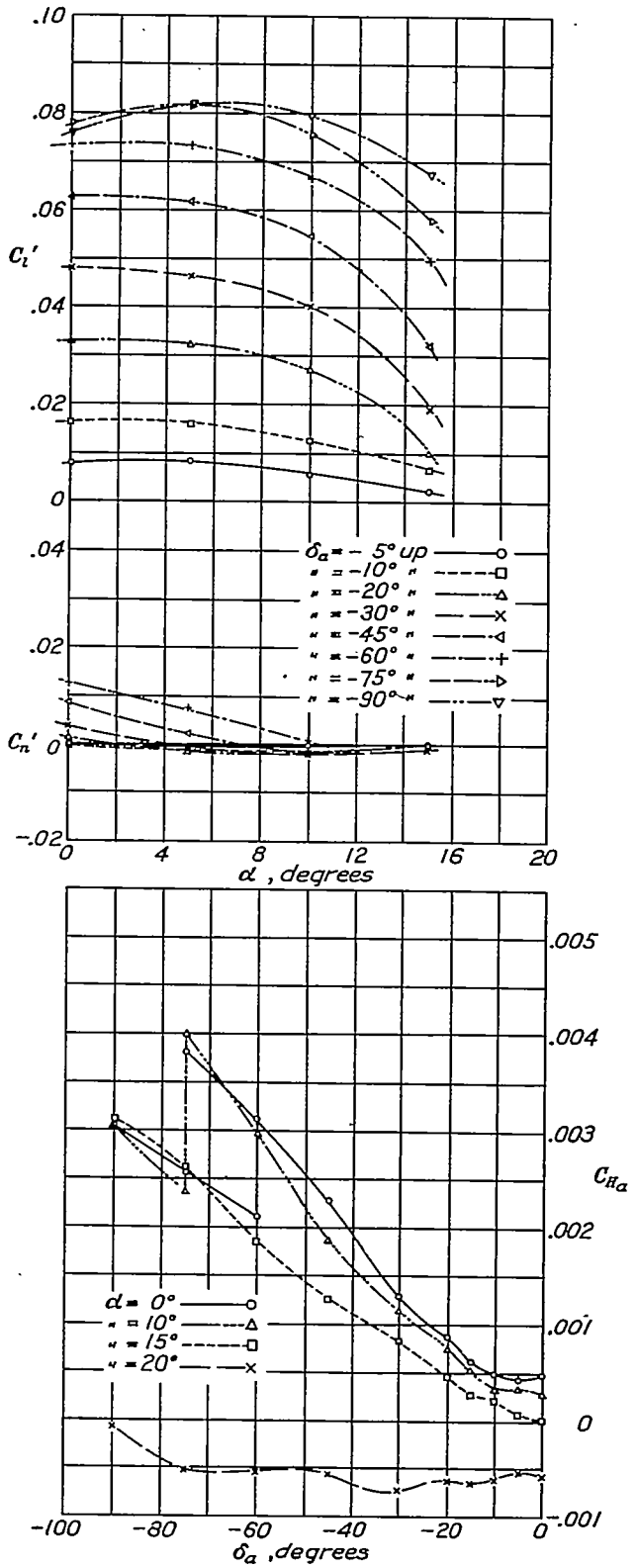

FIGURE 23.—Rolling-, yawing-, and hinge-moment characteristics of balanced upper-surface aileron at axis A9. Flap down 60° at flap axis F6. Slot arrangement 3A.

figure 28. Maximum lift coefficients, drag coefficients and ratios of L/D at maximum lift, and hinge-moment coefficients for different deflections of the balanced split flap are given in figure 29.

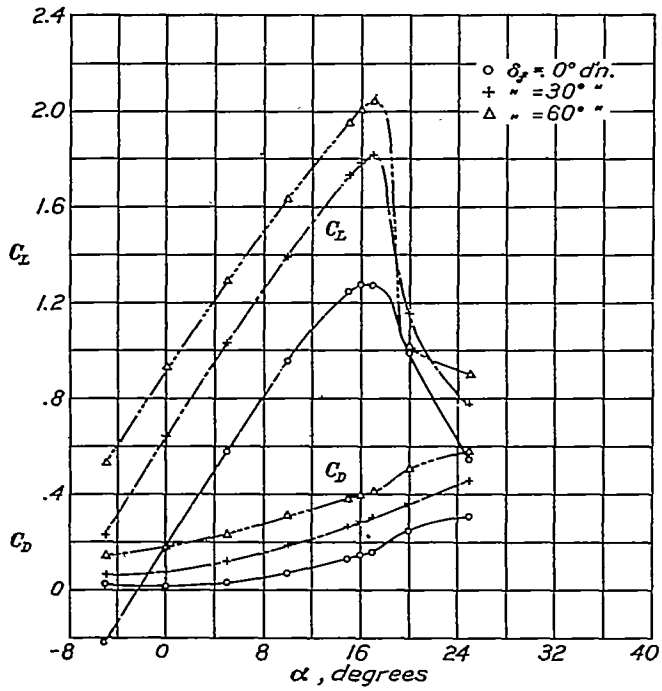

FIGURE 24.—Lift and drag coefficients for wing with balanced split flap at axis F6 Aileron rigged up 10° at aileron axis A9. Slot arrangement 3A.

Slot arrangement 5A (figs. 30, 31, and 32).—A new axis location F7, giving still further balancing, was obtained by making the wing upper surface thinner

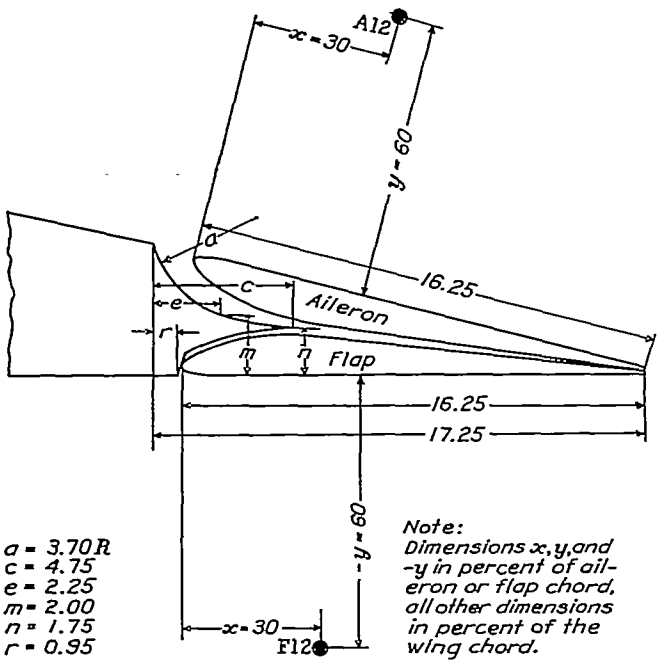

FIGURE 26.—Balanced upper-surface aileron and balanced split flap. Slot arrangement 4 with aileron and flap axes tested.

and moving the flap axis back, keeping it as close to the surface as axis 6 (fig. 30).

Lift and drag coefficients for the wing with arrangement 5A are given in figure 31. Maximum lift coefficients, drag coefficients and ratios of L/D at maximum lift, and hinge-moment coefficients for different

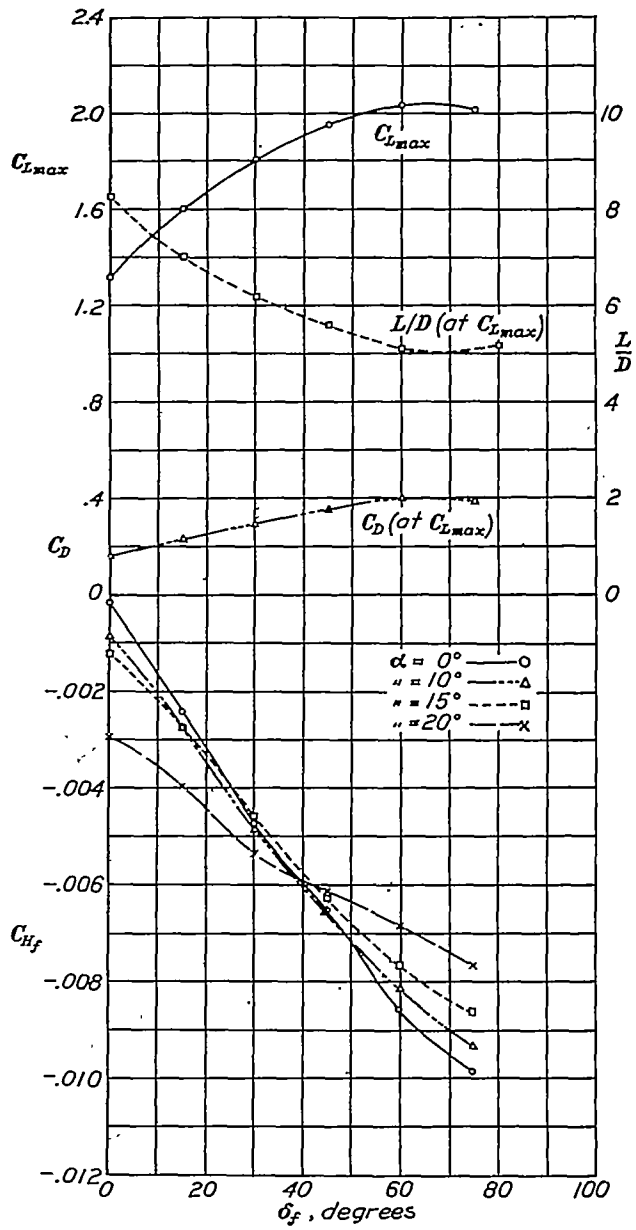

FIGURE 25.—$C_{L_{max}}$, C_D and L/D at $C_{L_{max}}$, and C_H for different deflections of balanced split flap at axis F6. Aileron rigged up 10° at aileron axis A9. Slot arrangement 3A.

deflections of the balanced split flap are given in figure 32.

DISCUSSION

In order to facilitate a discussion of some of the arrangements of balanced upper-surface ailerons and balanced split flaps, the factors that appear suitable for a comparison of the different arrangements in this investigation are listed in table II. A differential deflection of the ailerons was used for most cases, assuming two semispan ailerons, one up 30° and the

other down 10° from a neutral position rigged up 10°. The ailerons are compared on the basis of hinge-, rolling-, and yawing-moment characteristics, at two angles of attack 0° and 10°, with flaps both neutral and deflected. In the case of the flaps, the characteristics of the unbalanced split flap neutral and deflected for maximum lift were used as the basis of

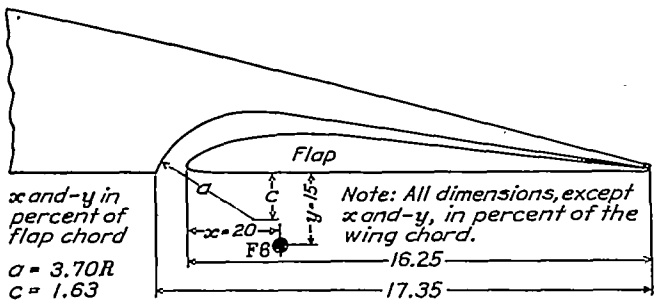

FIGURE 27.—Balanced split flap with slot arrangement 5.

comparison. The balanced flaps were then deflected to give approximately the same maximum lift and comparisons were made of flap hinge moments and ratios of L/D at this maximum lift.

For the same aileron deflections the rolling moments and the hinge moments of unbalanced upper-surface ailerons (flap neutral) are higher than those obtained

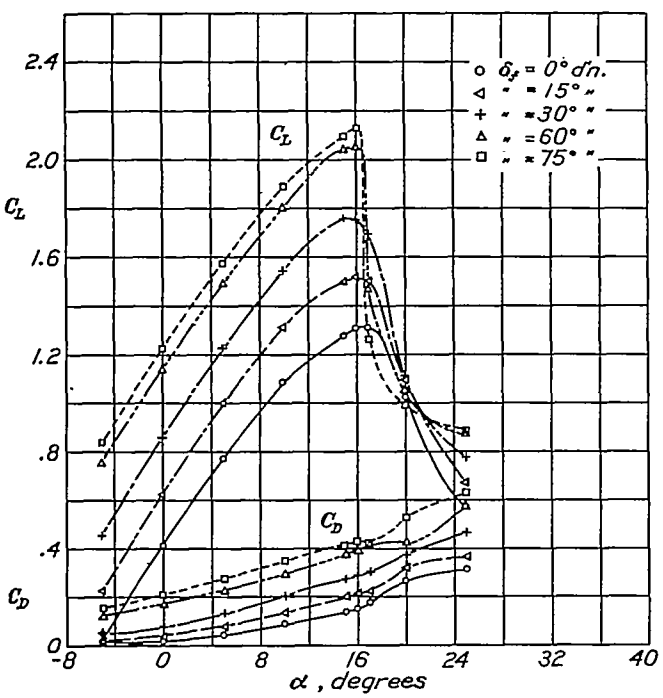

FIGURE 28.—Lift and drag coefficients for wing with balanced split flap at axis F6. Slot arrangement 5.

with balanced ailerons. The indicated yawing moments appear to be small for the unbalanced upper-surface ailerons near the stall of the wing; they are slightly adverse for the condition with flap deflected. Rigging the unbalanced upper-surface ailerons up 10° for neutral had very little effect on the aileron characteristics.

Of all the balanced upper-surface ailerons tested, slot arrangement 3, with the aileron at axis location A12 (rigged up 10° for neutral) and the balanced split flap at axis location F12, shows probably the best rolling-moment characteristics with the flap either neutral or deflected for maximum lift. With the flap neutral, the indicated rolling moments are about 15 percent lower than those of the unbalanced upper-

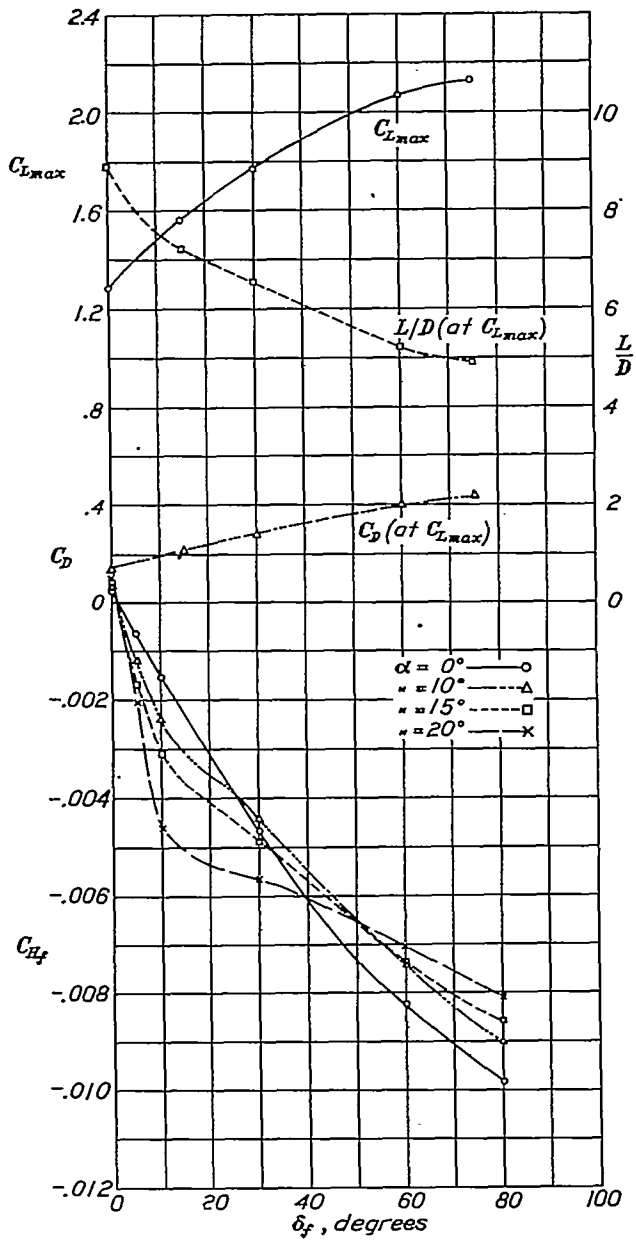

FIGURE 29.—$C_{L_{max}}$, C_D and L/D at $C_{L_{max}}$, and C_H for different deflections o balanced split flap at axis F6. Slot arrangement 5.

surface ailerons. With flap deflected, however, the rolling moments are 30 to 60 percent higher. The indicated yawing moments appear to be satisfactory at low angles of attack but are somewhat adverse near the stall with flap deflected.

The hinge moments are about half those of the unbalanced upper-surface ailerons, flaps neutral, and are increased to roughly 70 percent those of the unbal-

anced ailerons with flap deflected. On the basis of rolling moments equal to those obtained with the unbalanced ailerons, the hinge moments of the balanced ailerons would become about 60 percent those of the unbalanced ailerons, flap neutral, but only 45 percent with flap deflected. A point that should be noted, however, is that at high angles of attack, with the flap

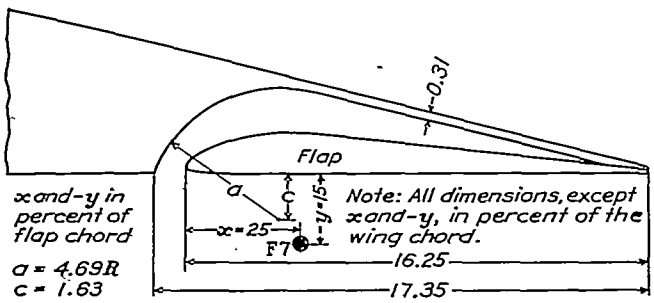

FIGURE 30.—Balanced split flap with slot arrangement 5A.

neutral, the stick forces may not be satisfactory for small aileron deflections because the hinge-moment curves (fig. 13) indicate no moment over a small range of deflections for the differential motion used. With this arrangement of aileron and flap, the axes are located 60 percent of the aileron or flap chord out from

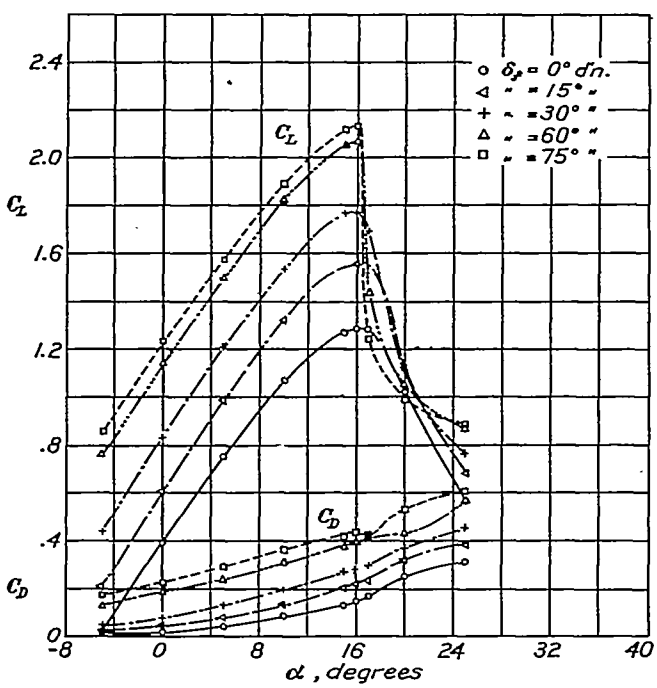

FIGURE 31.—Lift and drag coefficients for wing with balanced split flap at axis F7. Slot arrangement 5A.

the surface. On a wing having a chord of 6 feet this distance would amount to about 6 inches, which should be considered in comparisons with other arrangements.

Another arrangement of balanced upper-surface ailerons and balanced split flap which might be used is that of slot arrangement 3A with the aileron at axis location A9 and the flap at axis location F6. The ailerons in this case have the lowest hinge moments of any of the balanced arrangements tested, the moments being about 50 percent those of the unbalanced upper-surface ailerons when the flaps are neutral and about 40 percent when the flaps are deflected. On the basis of rolling moments equal to those of the unbalanced ailerons, the hinge moments would become about 65

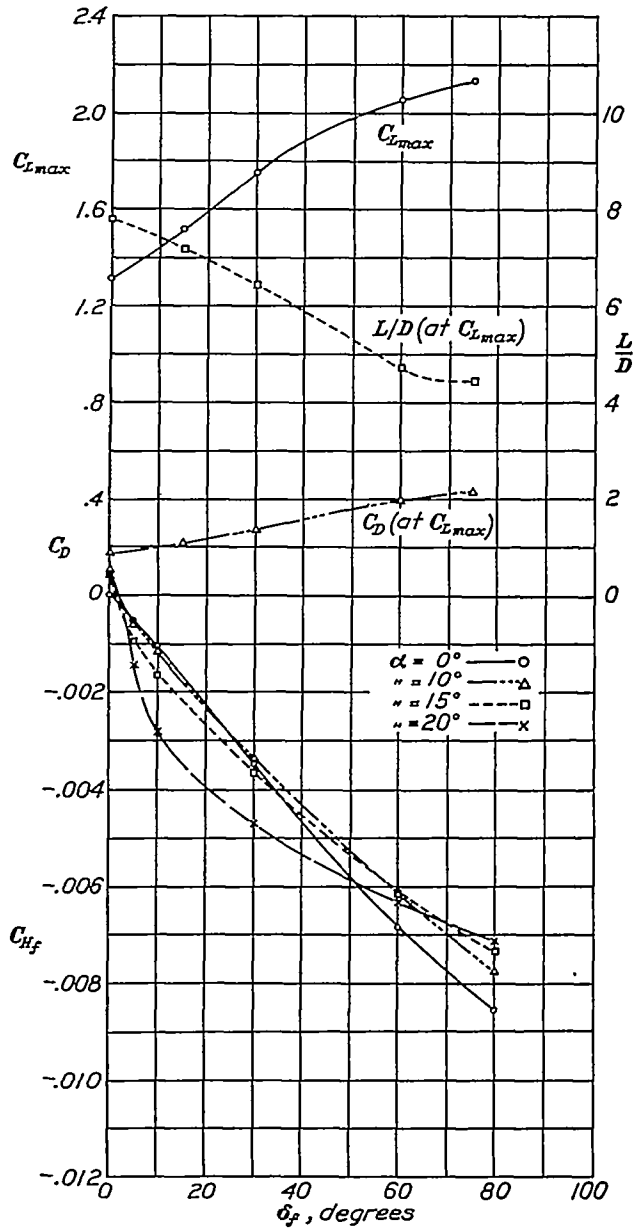

FIGURE 32.—$C_{L_{max}}$, C_D and L/D at $C_{L_{max}}$, and C_H for balanced split flap at axis F7. Slot arrangement 5A.

percent those of the unbalanced ailerons, flap neutral, and 50 percent with flap deflected. As regards lateral control, the rolling- and yawing-moment characteristics indicate that reasonably satisfactory control would be expected at all flight conditions excepting at the lowest speeds obtainable with the flaps neutral. This point, however, may be of sufficient importance to make the arrangement unsatisfactory.

The balanced split flap at axis location F12 with slot arrangement 3 gives a high maximum lift with exceptionally low hinge moments. The hinge moments are only about 50 percent those of the unbalanced split flap and are the lowest of any of those tested. The axis location is 60 percent of the flap chord out from the surface, an item that should be considered in comparisons with other balanced split flaps.

The balanced split flap at axis location F6 with slot arrangement 3A also gives a high maximum lift with reasonably low hinge moments. These moments are roughly 75 percent those of the unbalanced split flap for a flap deflection required to give the same maximum lift. With this arrangement the flap axis is only 15 percent of the flap chord out from the lower surface.

CONCLUSIONS

1. A balanced split flap has been developed that requires control forces about half those of the unbalanced split flap for approximately the same maximum lift.

2. A gap allowing flow of air from the lower to the upper surface of the wing in the vicinity of a split flap has an adverse effect on the maximum lifts attainable.

3. No entirely satisfactory arrangement of balanced upper-surface ailerons was found but one arrangement was developed that appeared to be satisfactory except for the stick-force characteristics with small aileron deflections at high angles of attack, flap neutral. Another arrangement also appeared to be satisfactory for all flight conditions except the lowest speeds obtainable with flaps neutral in which case the indicated rolling moments were low.

LANGLEY MEMORIAL AERONAUTICAL LABORATORY,
NATIONAL ADVISORY COMMITTEE FOR AERONAUTICS,
LANGLEY FIELD, VA., *August 20, 1935.*

REFERENCES

1. Weick, Fred E., and Wenzinger, Carl J.: Wind-Tunnel Research Comparing Lateral Control Devices, Particularly at High Angles of Attack. XII. Upper-Surface Ailerons on Wings with Split Flaps. T. R. No. 499, N. A. C. A., 1934.
2. Soulé, H. A., and McAvoy, W. H.: Flight Investigation of Lateral Control Devices for Use with Full-Span Flaps. T. R. No. 517, N. A. C. A., 1935.
3. Wenzinger, Carl J.: Wind-Tunnel Measurements of Air Loads on Split Flaps. T. N. No. 498, N. A. C. A., 1934.
4. Harris, Thomas A.: The 7- by 10-Foot Wind Tunnel of the National Advisory Committee for Aeronautics. T. R. No. 412, N. A. C. A., 1931.
5. Glauert, H.: Wind-Tunnel Interference on Wings, Bodies, and Airscrews. R. & M. No. 1566, British A. R. C., 1933.
6. Theodorsen, Theodore: Interference on an Airfoil of Finite Span in an Open Rectangular Wind Tunnel. T. R. No. 461, N. A. C. A., 1933.
7. Wieselsberger, C.: Theoretical Investigation of the Effect of the Ailerons on the Wing of an Airplane. T. M. No. 510, N. A. C. A., 1929.
8. Munk, Max M.: A New Relation Between the Induced Yawing Moment and the Rolling Moment of an Airfoil in Straight Motion. T. R. No. 197, N. A. C. A., 1924.

TABLE I.—ORDINATES OF BALANCED UPPER-SURFACE AILERON AND BALANCED SPLIT FLAP IN PERCENT AILERON OR FLAP CHORD

[Radius: L. E., 0.62; T. E., 0.37]

Distance from L. E.	Upper	Lower	Distance from L. E.	Upper	Lower
0	1.38	1.38	40	7.00	0
1.25	2.94	.42	50	6.00	0
2.5	3.72	.23	60	4.92	0
5	4.85	.03	70	3.84	0
7.5	5.81	0	80	2.81	0
10	6.65	0	90	1.73	0
15	7.81	0	95	1.07	0
20	8.43	0	100	.74	0
30	8.08	0			

TABLE II.—CHARACTERISTICS OF DIFFERENT AILERON AND FLAP ARRANGEMENTS

Aileron [a]												Flap [b]							
Figure	Type	Slot arrangement	Axis	Neutral δ_a	Deflection δ_a	C_{H_a}		C_l'		C_n' [c]		$C_{L_{max}}$ (see footnote b.)	L/D at $C_{L_{max}}$	C_{H_f} at $C_{L_{max}}$	Deflection δ_f	Axis	Slot arrangement	Type	Figure
						$\alpha=0°$	$\alpha=10°$	$\alpha=0°$	$\alpha=10°$	$\alpha=0°$	$\alpha=10°$								
				°	°										°				
2, 6	Unbalanced upper surface	None	A0	0	−40 0	0.0010	0.0034	0.054	0.044	0.006	0	1.29	7.71	----------	0	F0	None	Unbalanced split	2, 8, 9.
2, 6	do	None	A0	−10	−30 −40	.0013	.0039	.054	.044	.006	0	1.29	8.03	----------	0	F0	None	do	2, 8, 9.
2, 7	do	None	A0	0	10 0	.0011	.0039	.054	.054	.008	−.001	2.08	4.91	0.0035	60	F0	None	do	2, 8, 9.
2, 7	do	None	A0	−10	−30 10	.0010	.0013	.051	.054	.008	−.001	2.04	4.70	.0035	60	F0	None	do	2, 8, 9.
12, 13	Balanced upper surface	3	A12	−10	−30 10	.0015	.0018	.048	.036	0	−.001	1.27	8.08	----------	0	F12	3	Balanced split	12, 20.
12, 14	do	3	A12	−10	−30 10	.0020	.0026	.069	.072	.006	−.003	2.06	4.92	.0050	60	F12	3	do	12, 20.
12, 13	do	3	A12	−10	−30 10	.0015	.0018	.048	.036	0	−.001	1.27	8.90	----------	0	F8	3	do	12.
12, 18	do	3	A12	−10	−30 10	.0018	.0015	.064	.064	.005	−.001	2.06	4.78	.0078	75	F8	3	do	12.
12, 15	do	3	A8	−10	−30 10	.0024	.0023	.052	.037	.003	−.001	1.23	8.91	----------	0	F8	3	do	12, 19.
12, 17	do	3	A8	−10	−30 10	.0033	.0033	.059	.055	.008	0	2.06	4.78	.0078	75	F8	3	do	12, 19.
12	do	3	A1	−10	−30 10	.0037	.0035	.052	.011	.004	−.002	1.28	8.23	----------	0	F1	3	do	12.
12	do	3	A1	−10	−30 10	.0040	.0034	.054	.018	.005	−.001	2.00	4.82	.0096	60	F1	3	do	12.
21, 22	do	3A	A9	−10	−30 10	.0015	.0016	.049	.034	.002	−.002	1.31	8.28	----------	0	F6	3A	do	22, 24, 25.
21, 23	do	3A	A9	−10	−30 10	.0015	.0013	.058	.050	.007	−.002	2.03	5.08	.0077	60	F6	3A	do	22, 24, 25.
	None	-------	-------	-------	-------	-------	-------	-------	-------	-------	-------	1.20	8.04	----------	0	F6	5	do	27, 28, 29.
	do	-------	-------	-------	-------	-------	-------	-------	-------	-------	-------	2.07	5.20	.0074	60	F6	5	do	27, 28, 29.
	do	-------	-------	-------	-------	-------	-------	-------	-------	-------	-------	1.31	7.80	----------	0	F7	5A	do	30, 31, 32.
	do	-------	-------	-------	-------	-------	-------	-------	-------	-------	-------	2.05	4.69	.0061	60	F7	5A	do	30, 31, 32.

[a] Aileron data are given for 2 semispan ailerons deflected up and down from neutral shown.
[b] All flap data are for ailerons at neutral shown. Full-span flaps deflected for approximately same $C_{L_{max}}$.
[c] Negative=adverse; positive=favorable.