REPORT No. 598

ALTERNATING-CURRENT EQUIPMENT FOR THE MEASUREMENT OF FLUCTUATIONS OF AIR SPEED IN TURBULENT FLOW

By W. C. Mock, Jr.

SUMMARY

Recent electrical and mechanical improvements have been made in the equipment developed at the National Bureau of Standards for the measurement of fluctuations of air speed in turbulent flow. Data useful in the design of similar equipment are presented. The design of rectified alternating-current power supplies for such apparatus is treated briefly, and the effect of the power supplies on the performance of the equipment is discussed.

INTRODUCTION

The demand for experimental data on fluctuations of air speed in turbulent air flow still continues, and the hot-wire anemometer remains the tool most frequently used in the attempt to meet this demand. In three earlier papers (references 1, 2, and 3) the development of the equipment used at the National Bureau of Standards has been described in some detail as has also its application to various turbulent-flow investigations. Since the publication of reference 3 further investigations have been conducted (references 4, 5, 6, and 7).

The apparatus described in reference 3 has been extensively changed so that its use is simplified and its performance improved. It was therefore felt desirable to publish a description of the revised equipment and to provide certain design data that might be of use to designers of similar apparatus. The paper first describes the improved equipment now in use at the National Bureau of Standards, gives a brief treatment of the design of power supplies for such apparatus, and discusses the effect of the power supply on the performance of the amplifier.

Recapitulation of the information contained in reference 3 has been avoided as much as possible, so that the entire paper may be considered a continuation of the earlier one. The work was carried out at the National Bureau of Standards with the cooperation and financial support of the National Advisory Committee for Aeronautics.

The author wishes to acknowledge the valuable assistance and advice received from the other members of the staff of the Aerodynamical Physics Section during the design and construction of the apparatus and in the preparation of this paper.

I. THE NEW NATIONAL BUREAU OF STANDARDS EQUIPMENT

As stated in reference 3, the assembly of equipment used for measurement of air-speed fluctuations consists of five parts: (1) the wire itself; (2) a Wheatstone bridge for measurement of the wire resistance at room temperature; (3) an apparatus with suitable switching arrangements for supplying the wire with heating current, measuring the voltage drop across the wire at various air speeds for calibration purposes, and, finally, transferring the fluctuating voltage drop across the wire to the amplifier input; (4) a suitable amplifying system, including the requisite compensation for the amplitude reduction and phase lag of the hot wire; and (5) a final measuring instrument.

Improvement of this equipment has been effected through simplification of operation and maintenance rather than by modification of the basic principle. The major change has been the substitution of rectified alternating-current power supplies for the battery supplies previously used. This and other changes that have been made will be considered separately for each component of the assembly.

Figure 1 is a photograph of the present apparatus; figure 2 is an outline drawing with the various components identified.

HOT WIRES

The hot-wire remains as nearly as possible pure platinum 0.015 mm in diameter and 4 to 8 mm long. Recent investigations (reference 7) indicate the advisability of using short wires; therefore the present hot wires are usually 5 mm or less in length, whereas formerly 8 mm was the usual length. Welding still proves to be the most satisfactory method of attaching the hot wire to its supporting prongs although, when the wire is used in a slack condition, ordinary soft soldering has been fairly satisfactory.

WHEATSTONE BRIDGE

The Wheatstone bridge used for measuring the resistance of the hot wire at room temperature remains unchanged. It is a standard laboratory appliance.

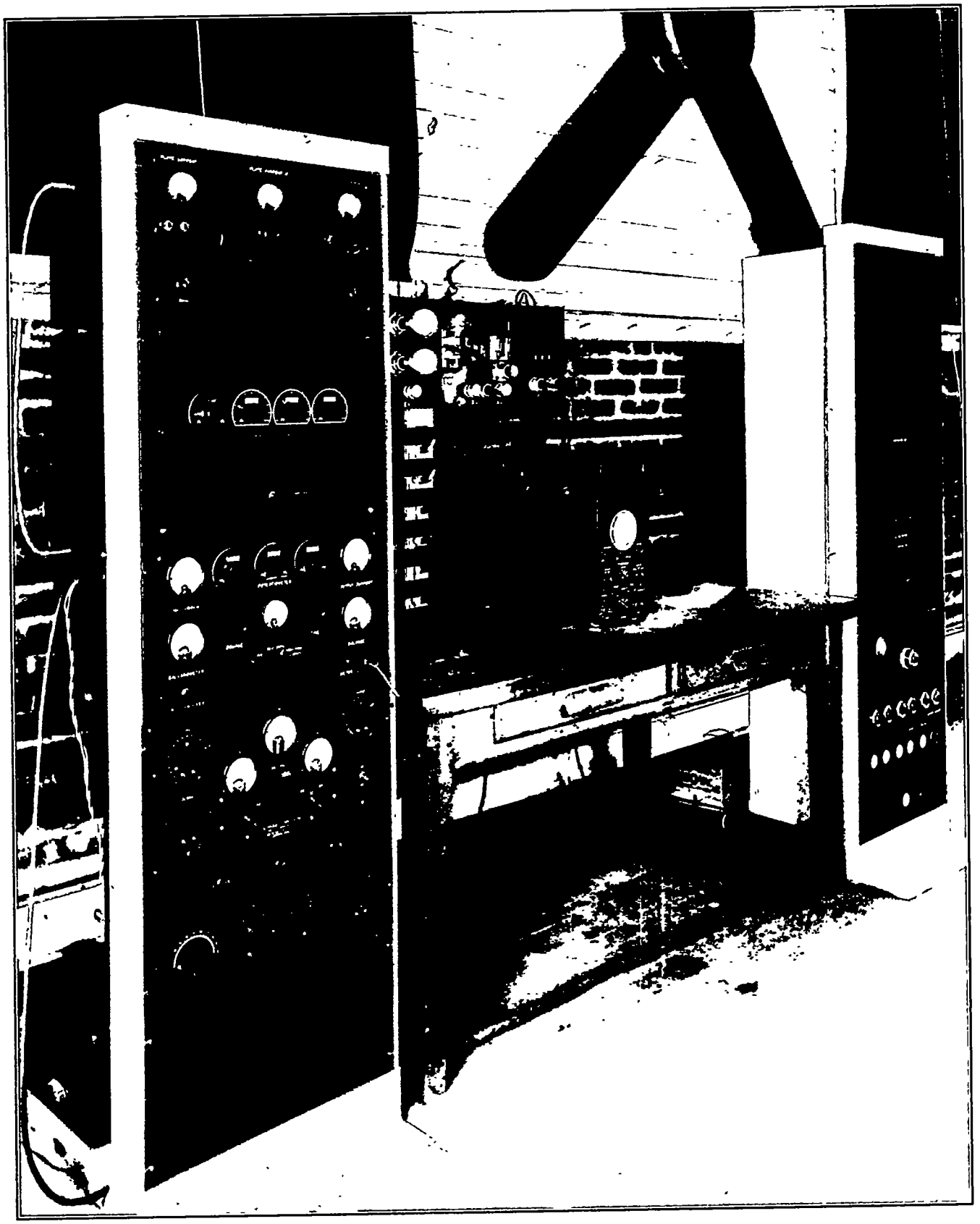

FIGURE 1.—General view of the alternating-current apparatus.

CONTROL EQUIPMENT

The apparatus for supplying and measuring the heating current, measuring the mean voltage drop across the hot-wire, and transferring the fluctuating voltage drop across the hot-wire to the amplifier remains essentially the same as described in references 1, 2, and 3 as far as the electrical circuit is concerned, although its mechanical arrangement has been modified in the interests of ease of manipulation. The only electrical change is the substitution of a two-circuit nonlocking push button for the single-circuit galvanometer key formerly used. This substitution allows the reference battery circuit, as well as the galvanometer circuit, to remain open except when a reading of the galvanometer is to be taken and greatly reduces the drain on the reference battery, making possible the use of standard no. 6 dry cells instead of a storage battery.

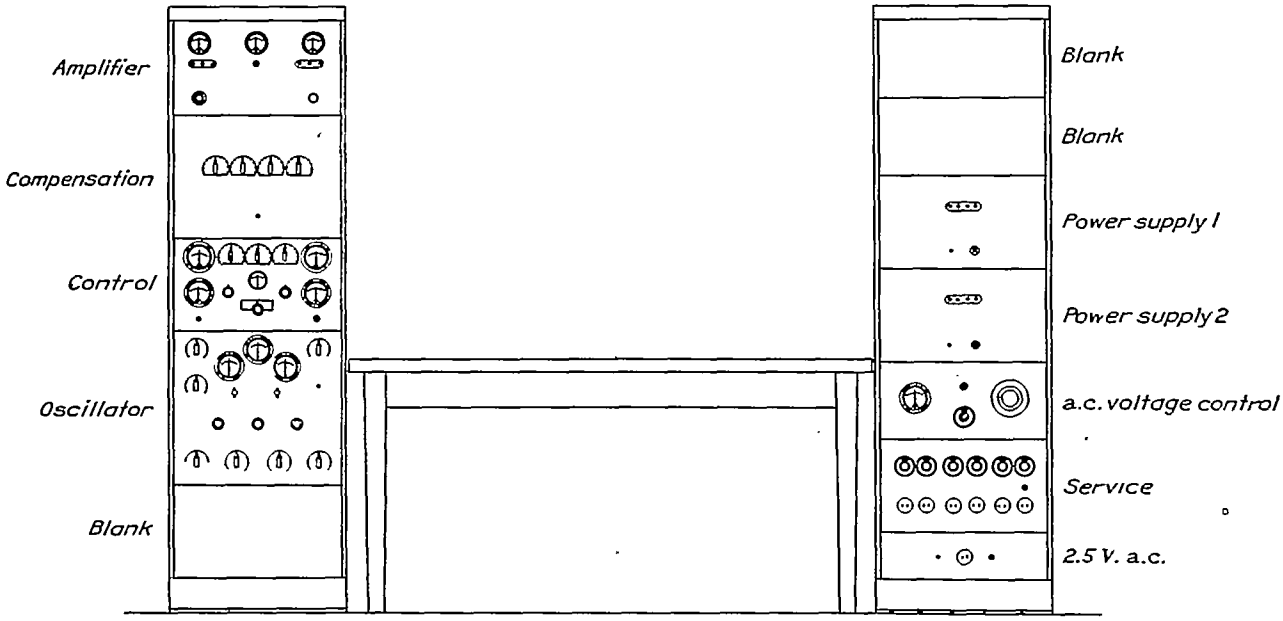

FIGURE 2.—Outline drawing of the alternating-current apparatus.

AMPLIFIER

The fourth unit of the apparatus, the amplifier, has been completely redesigned electrically, as may be seen from the schematic circuit diagram of the entire equipment (fig. 3).

TUBES AND GRID BIAS

For the previously used type 224 tetrode tubes, a type 77 pentode has been substituted in the first stage and type 6C6 pentodes in the second and third stages. These tubes have somewhat superior characteristics to the ones that they replace. The improved characteristics result in considerably increased gain per stage and, because of the pentode construction of the tubes, they are much less critical in regard to screen grid voltage.

Although these pentodes supposedly have nearly identical electrical characteristics, it was found that lowest noise in the first stage and highest amplification in the second and third stages were obtained with the combination shown. It was not determined whether this result was due to inherent differences between the tube types or merely to individual differences between the particular tubes available for trial. In another amplifier a different combination might prove superior. An incidental advantage of the new tubes is that in the first two stages, where the voltage to be amplified is quite low, a satisfactory grid bias may be obtained from a 1.5-volt flashlight-type dry cell inserted in series with the cathode. This arrangement allows the grid resistors to be connected directly to ground, which in turn makes it possible to place the amplification control directly in the grid circuit where it acts also as the grid resistor. The grid bias of the third stage was made adjustable because of the larger input voltages encountered by this tube.

AMPLIFICATION CONTROL

The use of an amplification control is necessary because of the wide range of voltages to be measured. The location of this control in the circuit is dictated by considerations of protection of the tubes from overload and the maintenance of a high ratio of amplified voltage to noise. The noise is an important factor because its magnitude determines the smallest voltage that may be measured, while overloading sets the limit for the largest.

The most important source of noise in an amplifier is the first tube and the circuits associated with it. Noise originating in the tube is caused by irregularities in electron emission from the cathode, which produce fluctuations in the plate current. Associated circuit noise may be due to thermal agitation in the

input circuit or fluctuations in the power-supply voltages. Of these, input circuit noise will be negligible because of the comparatively low input resistance (usually less than 10 ohms), and power-supply voltage fluctuations may be made negligible by proper design, leaving only the tube noise as effective.

Since this noise originates in the plate circuit of the first tube, it is important that full use be made of the amplification of that tube in order that the voltage to be measured may arrive at this point as large as possible relative to the noise originating there. This requirement means that the amplification control must not be placed ahead of the first tube. On the other hand, if the amplification control is not placed in the circuit ahead of the second tube, the large amplification of the first stage may cause overloading of the second or following stages when large values of turbulence are measured.

The amplification control is therefore located between the first and second stages of the amplifier, as in the previous equipment. The present amplifier, however, is different in that this control is in the grid circuit of the second stage rather than in the plate circuit of the first stage. It consists of a resistor of 1,600,000 ohms. The total resistance has taps so located that by switching from one tap to the next the amplification is changed by a factor of 2, the total range of control being 64:1. In the previous equipment this amplification control acted also as the load resistance of the first tube and therefore had in series with it the internal resistance of the plate-voltage source. This source was a bank of lead-acid storage cells, and their very low internal resistance did not greatly affect the calibration of the amplification control. In the case of the present apparatus, however, it was desired to use rectified alternating current for the plate-voltage supply and, because of the much greater internal resistance of this supply, the amplification control was moved to the grid circuit of the second tube.

Another advantage of this arrangement is that the possibility of a change in calibration due to unequal heating of the resistors is reduced because no direct plate current flows through the control. Furthermore, as now arranged, the coupling condenser is now always at the lowest possible voltage, which reduces the chance of condenser leakage with its attendant change in grid bias and amplification. As a result of this alteration, the present control changes the gain by a factor of exactly 2 per step.

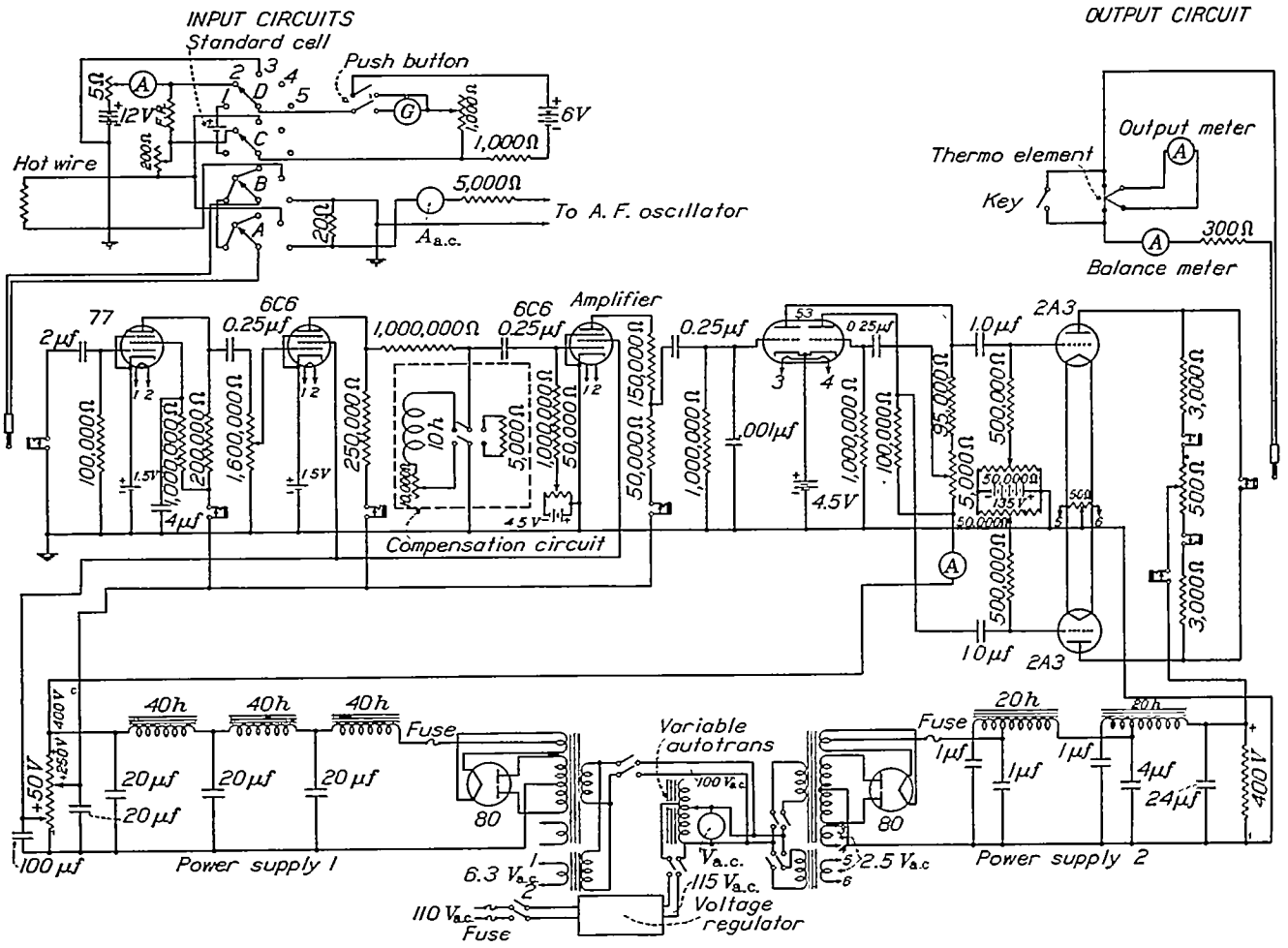

FIGURE 3.—Schematic circuit diagram of the apparatus.

COMPENSATION CIRCUIT

The only electrical change in the compensation circuit is the return of one terminal to ground rather than to the high-potential end of the plate resistor. This change reduces the direct-current voltage drop across the circuit, with consequent reduction in direct current through the circuit, and the possibility of leakage through the capacitor coupling the circuit to the following tube. It also allows one terminal of the resistor controlling the compensation to be grounded, which somewhat simplifies the mechanical construction.

In the foregoing discussion of the compensation circuit, as well as in the discussion of the amplification control circuit, the importance of reducing coupling capacitor leakage has been stressed. With the large capacitances required, space limitations dictate the use of paper dielectric capacitors that have insulation properties inferior to the more bulky mica dielectric capacitors. Undesirable effects, such as noise and variable amplification that may result from the use of paper coupling condensers, may be reduced by lowering the voltage across them. Any circuit changes, therefore, that will reduce the potential difference across the coupling capacitors will be an improvement.

OUTPUT STAGES

Reference to figure 3 will show that the output stage of the present amplifier differs markedly from the arrangements used in previous equipment. Since it is desired to measure only the alternating-current output from the amplifier, it is necessary to provide some means for keeping the direct plate current of the output tubes from flowing through the measuring instrument.

Three general means to this end exist: first, the use of a transformer to couple the meter to the output tube or tubes; second, the use of a "bucking-out" battery so connected that it supplies across the meter a direct voltage drop equal and opposite to that caused by the direct plate current of the output tube; third, the use of some balanced system, such as that employed in the present equipment, so arranged that the meter is connected across points of equal direct voltage but unequal alternating voltage.

A transformer has the advantages of simplicity and complete elimination of direct current through the meter, but unfortunately it is not possible, at present, to obtain a transformer that will give uniform output over the range of desired frequencies—namely, from less than 5 to over 5,000 cycles per second.

The second system, the use of a bucking potential, has been used in the previous equipment with success. However, it generally requires a battery of some sort, and one of the reasons for construction of the apparatus described herein was to eliminate, as far as possible, all batteries. In addition to the nuisance of battery maintenance, a battery system has the disadvantage of requiring careful adjustment of the operating voltages and currents of the output tube to such values that the direct-current voltage drop across the meter is equal to some voltage that may be conveniently obtained from a dry-cell battery; that is, some multiple of 1.5 volts. Otherwise some form of variable resistance must be incorporated in the circuit so that the bucking voltage may be made equal to the voltage drop across the meter. The use of a resistance for this purpose unavoidably inserts resistance in series with the measuring instrument, with resultant loss in sensitivity and a change in sensitivity with change in "bucking-battery" voltage during the life of the battery.

The third system, the use of a balanced or "push-pull" stage as in the present equipment, eliminates the bucking-battery troubles. It also offers the advantages of greater alternating-current output and independence of balance on tube operating voltages and currents as long as both tubes operate under the same conditions of input voltage and supply voltage. In practice this system is balanced for no direct-current through the meter as follows: The load resistors in the tube plate circuits are first adjusted to the same resistance, and the contact arm of the balance adjusting resistor between them (fig. 3) is set on the midpoint. The plate currents of the two tubes are then made equal to each other, and to the desired value, by means of the independent grid voltage controls. These operations having been performed, the output-meter circuit is attached, and the direct-current balance meter observed. If this meter then shows no current, the balance is correct. If some current is indicated, a slight readjustment of the grid biases should be made. Small unbalances may be corrected by means of the balance adjusting resistor between the plate resistors. A final check on the balance is made by applying an alternating voltage of magnitude just less than that causing overload of the amplifier. If the balance remains correct under this condition, the output stage is in proper adjustment. If the stage becomes unbalanced, dissimilarity of the tubes is indicated, and other tubes must be tried until a matched pair is found. Practically no trouble of this nature has been experienced.

Experiments have shown that the most suitable operating conditions for the output stage of the balanced type differ somewhat from those of the single-tube type. In the instance of the single-tube output amplifier used in the previous amplifier (reference 3), the grid voltage was adjusted so that the tube operated on the straight portion of its curve of grid voltage-plate current characteristic, the "class A" mode of operation, in which the average plate current is constant. With the balanced or "push-pull" type, however, it has been found that best operation is obtained when the adjustment is more nearly that of the "class B" mode, the grid biases being adjusted so that the tubes operate near plate current cut-off. (See fig. 4 (a).)

When so operated, the average plate current is not constant but varies with the applied alternating voltage. The distortion that would result if a single tube were used under these conditions is avoided by the push-pull connection. Attempts to operate the tubes with less grid bias and higher plate current lead to a higher amplification but to a reduced range of input voltages for which a linear relation exists between input voltage and output current. (See fig. 4 (b).) The best bias, depending as it does on the type of tubes used, the plate voltage available, and the load conditions existing, should be determined by trial for each particular installation. For preliminary design purposes the bias may be approximated quite closely by extending the straight portion of the curve of dynamic grid bias-plate current characteristic until it intersects the axis of zero plate current. The grid bias at which this intersection takes place is then that bias which will give the balanced amplifier a linear characteristic over the greatest range of input voltage. This is the adjustment illustrated by figure 4 (a).

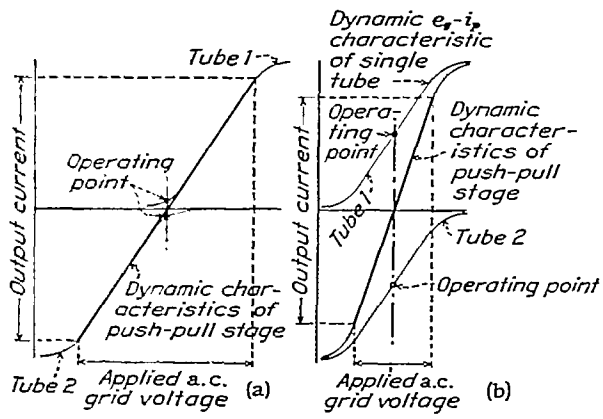

FIGURE 4.—Mode of operation of output amplifier.

In the instance of the balanced output amplifier stage now in use at the National Bureau of Standards, type 2A3 tubes are used because of their very high mutual conductance. This characteristic gives a large change in plate current for a given change in grid voltage. Furthermore, their low plate impedance allows a reasonable match between meter-circuit impedance and tube impedance without the necessity of insertion of excessive resistance in series with the meter in order to avoid distortion. With these tubes and a plate voltage of 400 volts the best operation is obtained when the grid bias is so adjusted that the plate current of each tube is about 5 milliamperes without input voltage. When input voltage is applied the plate current increases, becoming approximately 25 milliamperes per tube at maximum allowable input.

PHASE INVERTER

The use of a balanced output stage introduces an additional problem not encountered in the previous equipment. Because of the manner in which they are connected, the tubes of the balanced amplifier require input voltages exactly equal in magnitude and wave shape, but 180° apart in phase. In an ordinary amplifier these voltages would be obtained by using a coupling transformer having a center-tapped secondary, the grids of the balanced amplifier being connected to the opposite ends of this secondary winding. Since transformers are not usable at the lower frequencies under consideration, recourse must be had to some other method.

One such method that has proved very satisfactory is the use of a phase-inverting tube. This system takes advantage of the fact that the amplified alternating voltage appearing across a resistance load in the plate circuit of a vacuum tube differs 180° in phase from the applied alternating grid voltage that causes it. The circuit is so arranged that the alternating voltage applied to the grid of one of the balanced amplifier tubes is passed through one more stage than that applied to the grid of the other, this additional stage having an amplification of 1:1. Thus the grids of the two balanced amplifier tubes receive voltages 180° apart in phase but equal in magnitude.

A practical circuit of this type is that incorporated in the present amplifier and illustrated by figure 3. For economy of space a type 53 twin-triode tube is used instead of two separate similar tubes. This type 53 tube consists, in effect, of two identical triodes, each having a voltage amplification of about 20. The first of these triodes is inserted directly between the high-gain amplifier and the grid of the upper of the two balanced amplifier tubes. The second receives its input from a voltage-reducing tap on the plate resistor of the first, amplifies this voltage, and applies it to the grid of the lower balanced amplifier tube. The two balanced amplifier tubes thus receive grid voltages that are 180° apart in phase and, when the voltage-reducing tap feeding the second half of the type 53 tube is properly adjusted, are equal in magnitude.

A similar result might be obtained by eliminating the type 53 tube and feeding the grid of one of the balanced amplifiers from a suitably located tap on the plate resistor of the other. This arrangement would, of course, sacrifice the voltage gain of approximately 20 that occurs in the type 53 tube as now used. The choice of method employed thus depends somewhat on the amplification necessary in a given installation.

OUTPUT METER

One of the greatest sources of annoyance in the operation of the older equipment was the frequency with which the highly delicate 0 to 5 milliampere thermoelement alternating-current milliammeter was burned out by momentary overload. The output meter used in the new equipment was designed to overcome this trouble and consists of a 0 to 500 microampere direct-current microammeter operated by a separate heater-type thermoelement. This combination gives a full-scale reading with a current of 25 milliamperes through

the heater of the thermoelement and has a maximum safe current-carrying capacity of 40 milliamperes. In series with the heater, which has a resistance of 10 ohms, is placed a fixed resistance of 300 ohms. The purpose of this resistance is to prevent distortion by making the total resistance of the meter circuit large enough to act as a reasonable load for the output tubes of the amplifier. The exact value of the resistance used is not critical. No difference in performance of the amplifier except a slight loss in over-all sensitivity could be detected when the 300 ohms used was increased to 1,000 ohms. Resistances less than 300 ohms were not tried, as no great increase in sensitivity, or any other benefit, could be expected from their use.

Although the present meter is only one-fifth as sensitive as that employed in the previous equipment and the sensitivity is still further reduced a slight amount by the addition of the series resistance, the amplification of the new amplifier is sufficiently greater than the older one that the actual sensitivity of the equipment from hot wire to meter reading is not decreased. Furthermore, the ruggedness of the meter is so much greater that no trouble whatever from meter burn-out has been experienced in service.

POWER SUPPLY

The apparatus of reference 3 was entirely battery powered, requiring a total of three 6-volt storage batteries, 1,200 small storage cells, three 45-volt dry batteries, and four 4.5-volt dry batteries. The great bulk of this voltage-supply equipment, together with its weight, its comparatively short life, and the almost constant effort required to keep it in good working condition made it highly desirable to use an alternating-current power supply, rectifying and filtering wherever necessary. The new equipment occupies approximately one-tenth the volume of the old plate voltage supply battery alone, weighs somewhat less, has almost unlimited life, and requires little or no attention.

HIGH VOLTAGE

Two separate transformers, rectifiers, and filters are used to supply the high direct-current voltage for plates and screens. One of these sets takes care of the requirements of the high-gain stages and the phase-inverter stage; the other furnishes only plate voltage for the output stage. Both supplies have the same output voltage, namely, 400 volts direct current, but differ in other respects.

The power supply for the high-gain and phase-inverter stages is provided with taps giving 50 volts direct current and 250 volts direct current for screens and high-gain amplifier plates, respectively, as well as the full output of 400 volts for the phase-inverter plates. The filter for this supply consists of three 40-henry 60-milliampere chokes and a total of 180 microfarads of filter capacitance, arranged as shown in figure 3. The rectifier tube used is a type 80 high-vacuum full-wave rectifier.

The power supply for the output stage differs from the above-described supply mainly in the amount of filtering provided. Since the output stage has in itself very little amplification, and particularly because it is not followed by any other amplifier, the filtering necessary to keep the hum at the desired low level is much less than in the case of the high-gain stages. Two 20-henry chokes capable of carrying 200 milliamperes are used in conjunction with 31 microfarads of capacitance arranged as shown in figure 3.

It will be noted that series resonant circuits are employed in this filter as well as the usual pi type low-pass sections. These series circuits are resonant at 120 cycles per second, the main ripple frequency of the rectifier's output wave; and their purpose is to increase the filtering efficiency without the use of large values of capacitance and inductance, particularly the latter.

LOW VOLTAGE

The low voltages necessary for cathode heating in the new equipment are supplied from the 110-volt alternating-current power lines by step-down transformers or windings on the high-voltage transformers, instead of by storage batteries. This change results in a considerable reduction in weight and bulk.

It was thought that excessive hum might be introduced by this change, but tests of the completed amplifier have shown that the total hum, both from this source and from the high-voltage supplies, is too low in magnitude to be measured by the output meter even when maximum amplification is used.

Low voltage, of the order of 50 volts, for the screen grids of the high-gain tubes is obtained from the high-voltage power supply. The method of obtaining screen-grid voltage for the first stage differs from that used in the second and third. The reason for this difference is discussed in the section of this paper dealing with the effect of the power supply on the amplifier characteristics.

The last portion of the power supply proper is the grid bias system. Here dry cells or dry-cell batteries are used as in the previous equipment. The retention of batteries for this purpose is justified because of their long life in such service, their compactness, and their low internal resistance compared with any practical substitute. In almost all cases the drain on the bias batteries in the new equipment has been either completely eliminated or substantially reduced so that greater battery life may be expected than before.

VOLTAGE REGULATION

The use of rectified alternating-current power supplies with amplifiers capable of amplifying very low frequencies leads to unexpected difficulties when the power supply is operated from commercial power lines. In addition to gradual changes of voltage, which are annoying in that they cause corresponding changes in

amplifier sensitivity, such lines usually carry quite rapid voltage fluctuations, caused by switching transients and other load irregularities, which have frequencies high enough to be amplified by the amplifier. Such fluctuations of the line voltage may produce an excessively high and variable noise level, or dangerously large transients in the amplifier. For this reason it has been found necessary to provide voltage regulators between the nominally 115-volt alternating-current line and the power supplies of the amplifier.

Two types of regulation are used. First, a commercial automatic voltage regulator entirely removes the slow changes in line voltage and reduces the transient changes to a low magnitude. Second, a manual control of voltage, in the form of an autotransformer having a practically continuously variable voltage ratio, inserted in the line between the automatic voltage regulator and the power supplies, takes care of voltage changes due to line and power-supply heating and makes possible intentional voltage changes. These two types of voltage regulation almost completely eliminate all line-voltage troubles, making the amplifier independent of line conditions as long as the line voltage remains between the limits of 90 to 130 volts.

MECHANICAL ARRANGEMENT

In the design of the apparatus considerable attention was given to mechanical lay-out. It was desired to have in the completed equipment a tool that might be used with maximum convenience by one operator. At the same time it was necessary to observe certain precautions in the matter of electrical shielding and power-supply location. Ease of repair and maintenance also entered into the problem to a considerable extent. The result of compromise between these sometimes conflicting factors is the apparatus illustrated by figures 1 and 2. Figure 1 is a photograph of the entire equipment as used, including a small cathode-ray oscillograph not properly a part of the assembly. Figure 2 is an outline drawing showing the panel lay-out of the equipment.

Two separate units are used. That on the left in both figures consists of the amplifier and all controls directly associated with it, as well as calibrating and testing equipment. That on the right contains the power-supply equipment and controls.

Both units are assembled on standard steel relay racks taking panels 19 inches in width and multiples of 1¾ inches in height, with a horizontal clearance of 17½ inches between vertical rack members. All apparatus is mounted from its panel, and each individual panel, with its associated apparatus, may be removed as a unit for inspection or repair. The apparatus behind each panel, in the case of the amplifier rack, is fitted with a metal case or dust cover, which also acts as a shield against stray electrical fields in the room. The apparatus on the power-supply rack is covered by one large dust cover supported from the rack itself and removable as a unit. This general method of construction is one that has been widely used in the telephone and other communication fields. It gives compactness with a maximum of accessibility and requires a minimum of floor space.

The amplifier panel carries three direct-current milliammeters, the amplification control switch, and the fine adjustment for balance of the output stage. By means of a plug-and-jack arrangement it is possible to measure the plate current of the various tubes using the three meters provided. Input and output connections to the amplifier are likewise made by means of plugs and jacks.

The arrangement of the amplifier behind the panel is such that all grid and plate leads are very short and each stage is separated from the others by aluminum shields. All grid and plate leads are kept as far as possible from the metal shielding to reduce the loss of amplification at high frequencies. All power-supply leads are run in shielded cables with the shields grounded to the amplifier framework at frequent intervals and are kept well away from the grid and plate leads of the tubes to reduce the possibility of hum pick-up. The input lead to the amplifier is also shielded, and the shielding is grounded, both to reduce pick-up of stray fields in the room and to prevent coupling between input and output circuits of the amplifier. The possibility of such coupling is still further reduced by taking input and output leads from opposite ends of the amplifier.

The compensation-circuit panel carries a four-dial 0–10,000-ohm decade resistance for compensation adjustment, as well as a double-pole, double-throw, locking push-button switch arranged to connect either the compensation circuit or a 5,000-ohm resistor to the amplifier, the resistor being used for amplifier calibration. Behind this panel, supported by a bakelite shelf in a large aluminum box, is the compensating coil. As much space as possible was allowed around the coil in order to prevent excessive reduction of its effective inductance by the metal shield. Attempts to operate with no shielding were unsuccessful because of the stray field pick-up of the large compensation coil. This trouble was experienced in the previous amplifiers also, but to a much lesser extent because of the smaller amplification of that equipment.

Below the compensating-coil panel is that of the potentiometer and control apparatus. Here, conveniently grouped in one spot, are all the controls and meters necessary for routine operation of the equipment with the exception of the compensation adjustment, which is within easy reach on the panel above. The use of an arrangement such as this effects a worth-while saving in time and effort.

The apparatus on the panel is as follows: From left to right in the top row, the alternating-current microammeter indicating the current input from the calibrating oscillator; the three-dial decade 0–1,000-ohm

resistance of the potentiometer for setting the heating current and measuring the mean voltage drop across the wire; and the direct-current microammeter used, in conjunction with a thermoelement, as the output meter. In the next row are the galvanometer for indicating balance in the potentiometer circuit; the coarse adjustment of heating current; a direct-current milliammeter for rough indication of heating current; the fine adjustment of heating current; and the direct-current milliammeter used to indicate balance in the output stage of the amplifier. The bottom row consists of the combined galvanometer and reference-battery key; a five-position, four-gang switch to be described later; and the jack for the output-meter key, which for convenience is attached to a short, two-wire flexible cord.

The above-mentioned five-position, four-gang switch replaces the cumbersome plug-and-jack system employed in the earlier apparatus to control the potentiometer and amplifier input circuits. In the first of the five switch positions the potentiometer and standard cell are so connected that the voltage of the reference battery may be measured. In the second position the potentiometer is connected across a known fixed resistance in the heating-battery circuit so that the current through the hot-wire may either be measured or set to some predetermined value. In the third position of the switch the potentiometer is connected across the hot-wire so that the mean voltage drop may be measured. In the fourth position the hot-wire is connected across the input of the amplifier so that the fluctuating voltage drop may be amplified and measured. Finally, in the fifth position, the amplifier input is connected across a 20-ohm resistor in the oscillator output circuit for calibration and testing purposes. Thus the switch with five settings performs the same functions as the six jacks and three plugs formerly used.

Behind the control panel are mounted the standard cell, the reference battery, and the various fixed and variable resistors associated with the potentiometer circuit and oscillator output circuit, as well as the thermoelement and resistor used in the amplifier output circuit. Shielding between input and output circuits is provided, and all apparatus is contained in an aluminum outer shield with a removable back.

The unit below the control panel is the General Radio type 377B audio-frequency oscillator used for calibration and testing. This oscillator is the one used with the earlier equipment, adapted for rack mounting.

The last unit on the amplifier rack is a blank panel covering space reserved for future expansion.

The power-supply rack carries all power supplies and voltage controls, with the exception of the automatic voltage regulator, which is mounted some distance away so that the amplifier will be less affected by the external field it produces. Starting at the top the first two panels are blanks reserved for future use. The third unit is the power supply for the high-gain and phase-inverter stages of the amplifier. On this panel are mounted an on-off switch controlling the input to the power supply, a red pilot lamp to indicate when the power supply is in operation, and a set of small jacks connected to the various high voltages available at the power-supply output. The main panel of the power supply is ¼-inch cold-rolled steel; this heavy material is used because of the very considerable weight of the power-supply equipment. The component parts, which are of the "bottom connection" type, are mounted on a vertical subpanel about 2 inches behind the main panel and of the same material. The space between main and subpanels is used for the wiring, which is thus protected and hidden.

In order to reduce the external alternating-current field of the power supply, all chokes and transformers are enclosed in very heavy cast cases of high permeability iron alloy and as much of the wiring as possible is confined to the space between main and subpanels or, in the instance of output and input leads, to the interior of the channels forming the vertical members of the rack.

The fourth unit is the power supply for the output stage. This unit differs from the third unit only in the electrical details that have been discussed previously. The mechanical arrangement is identical to that of the other power supply. The fifth unit is the input-voltage control panel, and carries the main alternating-current power switch, a pilot lamp, the manual voltage control autotransformer, and an alternating-current voltmeter that indicates the input voltage to the power supplies. The sixth unit is a service panel carrying several outlets for alternating and direct current, and a battery-charging outlet. The last panel carries a 2.5-volt transformer which supplies heating current for the output stage filaments. On the face of the panel are mounted a switch, a pilot lamp, and an outlet that allows the 2.5 volts alternating current to be used for any purpose.

As mentioned previously, a sheet-iron dust cover encloses the rear of all apparatus on the power-supply rack. This cover also provides some shielding in addition to the iron cases of the individual components of the power supplies. Further shielding is obtained by enclosing all leads connecting the two racks in grounded lead-foil coverings.

PERFORMANCE

The important features of the performance of the complete equipment are summarized by the two curves of figure 5.

In comparison with the performance of the previous equipment (figs. 9 and 11 of reference 3), it is seen that some improvement has been effected in the frequency characteristic of the uncompensated amplifier. The new apparatus maintains its amplification constant to 3,000 cycles per second, whereas the older amplifier started to lose amplification at about 1,600 cycles per second.

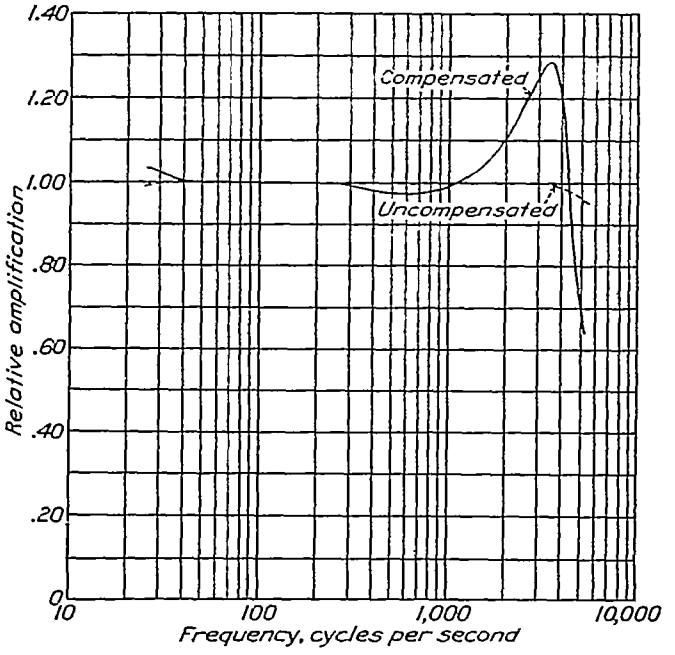

FIGURE 5.—Frequency characteristic of apparatus.

The comparison between the compensated frequency characteristics of the two sets of apparatus is not quite so favorable. Because of the unavoidable decrease in the effective inductance of the compensation coil, caused by proximity to its shielding box, the resonant frequency has been lowered from 4,000 to 3,500 cycles per second. This fact, together with other effects probably due to the use of a power supply having high internal impedance compared with the storage cells formerly used, causes the frequency characteristic to depart from the ideal at a somewhat lower frequency than before. The height of the resonant peak, however, has been reduced and it is felt that the slight sacrifice in frequency-characteristic performance is offset by the increased reliability and usability of the apparatus.

Other features of the performance, not evident from the curves shown, are a sixfold increase in sensitivity, which allows the use of a more rugged meter without loss in effective sensitivity, and an improvement in the constancy of amplification control setting ratios.

II. POWER-SUPPLY DESIGN

In the selection of a power-supply system for an amplifier there is no doubt, from the standpoint of electrical design, that batteries, particularly storage batteries, offer the best results. The cost, the bulk, and the problem of maintaining a battery power supply make it desirable, however, to design an alternating-current operated power supply that will give satisfactory electrical performance.

For cathode heating, alternating current of the proper voltage may be directly applied to the heaters of the indirectly heated cathode type tubes and successful performance obtained even in high amplification amplifiers. In the output stage of the amplifier, directly heated cathode tubes are generally satisfactory. The only precautions necessary are: grounding of the zero potential point of the heater supply circuit, shielding of the supply wires to the tube sockets, the use of some discretion in the placement of these supply wires relative to grid and plate wiring in the amplifier, and the use of magnetically well-shielded transformers located some distance from the amplifier and of ample capacity for the load to which they are connected.

The design of the high-voltage supply is a more complicated matter. It divides itself more or less naturally into two phases. First, the treatment of the problems peculiar to the power supply itself, namely, the provision of sufficient filtering and power capacity. Second, the consideration of the effect that the power supply will have on the characteristics of the amplifier, entirely apart from the possible introduction of hum and noise. These phases will be discussed separately.

FILTER DESIGN

A rectified alternating-current power supply consists, in general, of a transformer to raise the commercial line voltage to the required high voltage, rectifiers to change this high voltage from alternating current to pulsating direct current, and a filter system to remove, as nearly as possible, all these pulsations, leaving only a pure direct current of the desired high voltage.

INDUCTANCE INPUT FILTER

Many types of transformers, rectifiers, and filters may be used in various combinations, but certain combinations are more common than others. Of these the most

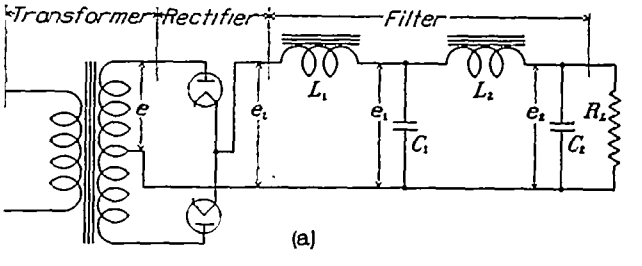

(a) Schematic circuit diagram.

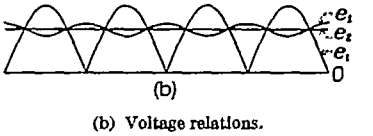

(b) Voltage relations.

FIGURE 6.—The inductance input filter.

common is the single-phase full-wave transformer and rectifier working in conjunction with an inductance input filter. This type is shown in figure 6 (a). The output from the system consists of a series of voltage pulses having twice the frequency of the alternating current supplied to the transformer. Neglecting the minor effects of voltage drop in the rectifiers and transformer leakage reactance, these voltage pulses approximate the shape of arches of sine waves, as shown in figure 6 (b).

If the input inductance of the filter L_1 is made sufficiently large to satisfy the inequality

$$\frac{\omega L_1}{R_L} \geqq \frac{e_{ac}}{e_{dc}}, \tag{1}$$

where ωL_1 is the reactance of L_1 to lowest frequency in rectifier output;
R_L, load resistance into which the filter works;
e_{ac}, amplitude of the lowest frequency component in the rectifier output voltage;
and e_{dc}, direct-current voltage in rectifier output;
a fairly constant input current to the filter will be maintained. Under this condition the voltage across C_1 will fluctuate only slightly about a value equal to the average voltage of the rectifier output pulses (fig. 6 (b)). The action of L_2 and C_2 is to reduce still further the magnitude of the fluctuation. It is possible to reduce the fluctuation components to as small a portion of the total output voltage as may be desired by making L_1, L_2, C_1, and C_2 sufficiently large, or by adding similar sections.

Assuming that the input inductance is large enough to satisfy relation (1), the residual fluctuation components in the filter output may be computed with sufficient accuracy by considering that the output voltage wave, e_i, from the rectifier has the form given by the Fourier series [1]

$$e_i = \frac{2e}{\pi}\left(1 - \frac{2}{3}\cos 2\omega t - \frac{2}{15}\cos 4\omega t - \frac{2}{35}\cos 6\omega t \cdots\cdots \frac{2}{1-n^2}\cos n\omega t\right), \tag{2}$$

where e is the peak value of alternating-current voltage applied to rectifier,
$\omega = 2\pi f$,
and f is the supply-voltage frequency.

The output wave of the form shown in equation (2) may be applied to the filter under consideration, and the network solved for the value of the components in the filter output by the usual methods for complex networks. This procedure is somewhat laborious, however, and sufficient accuracy may be obtained by means of a simplified computation.

Assuming that the reactance of each series inductance is large compared with the reactance of the preceding and following shunt capacitances and that the reactance of the output capacitance is small compared with the load resistance, the following expression is approximately true,

$$\frac{1}{\omega^{2n}(L_1 L_2 \cdots\cdots L_n)(C_1 C_2 \cdots\cdots C_n)} = \frac{e_0}{e_i}, \tag{3}$$

where e_i is the magnitude of a given alternating-current component applied to filter;
e_0, magnitude of the same component at the output of the filter;
n, number of sections in the filter;
L_1 to L_n, series inductances;
C_1 to C_n, shunt capacitances;
and f is the frequency of the component under consideration.

For the two-section filter of figure 6 (a) equation (3) becomes

$$\frac{e_0}{e_i} = \frac{1}{\omega^4 L_1 L_2 C_1 C_2}. \tag{4}$$

In the application of the preceding approximate equations the magnitude and frequency of each component of the rectifier output may be substituted in turn, and the resultant magnitude of this component in the output from the filter obtained. In order to simplify this procedure, equation (2), giving the magnitude of the components of the rectifier output, may be written in tabular form as follows, by giving the direct-current output voltage the value 1.00.

TABLE I

VOLTAGE RELATIONS IN SINGLE-PHASE FULL-WAVE RECTIFIERS

Root mean square a. c. voltage applied to each rectifier	1. 11
The d. c. output voltage at rectifier terminals	1. 00
Peak value of lowest frequency a. c. component	0. 667
Peak value of second harmonic of lowest frequency a. c. component	0. 133
Peak value of third harmonic of lowest frequency a. c. component	0. 057
Frequency of lowest frequency a. c. component	$2f$
Frequency of supply voltage	f

In table I it will be noted that the lowest frequency component has a frequency twice that of the supply

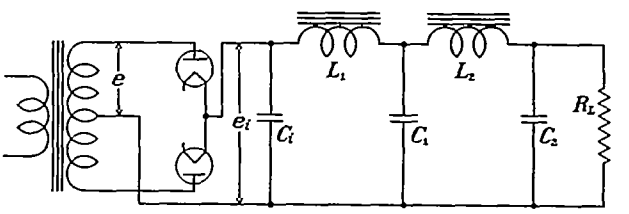

FIGURE 7.—Schematic circuit diagram of capacitance input filter.

voltage. Since in most cases the supply will be from the usual 60 cycles per second lines, this lowest frequency component will have a frequency of 120 cycles per second and the next two higher frequency components will have frequencies of 240 and 360 cycles per second. In view of the fact that the amplitude of the higher frequency components decreases rapidly with increase in order, while the smoothing action of the filter increases as the $2n$ power of the frequency, it is generally sufficient to consider only the lowest frequency component of the rectifier output in computing the filter performance.

CAPACITANCE INPUT FILTER

Another type of rectifier and filter combination often used is the single-phase full-wave rectifier and capacitance input filter, for which a typical schematic circuit diagram is given in figure 7. The advantages of this

[1] This is the Fourier expansion of the half-sine wave shown in fig. 6 (b).

arrangement, in comparison with the inductance input system, are an approximately 25-percent increase in filtering action from a given amount of inductance and capacitance and a considerably higher direct-current output voltage for equal alternating-current inputs to the rectifiers. The disadvantages are the poor voltage regulation of the system under a varying load and the increased load on the rectifier tubes. Neither of these disadvantages is serious when the rectifier and filter are to be used to supply high voltage to a light and constant load, such as that offered by the high-gain stages of a turbulence-measuring amplifier.

The action of a capacitance input filter is somewhat different from that of the inductance input type in respect to the wave form of the voltage applied to the first inductance. In the inductance input filter this voltage depends only on the rectifier, whereas in the capacitance input filter it also depends on the capacitance of the input condenser.

Each time the alternating-current voltage applied to a rectifier anode reaches its peak value, the input condenser C_i charges to this same value. Then, as the alternating-current voltage at the rectifier falls, the condenser discharges into L_1 until the other rectifier anode reaches its peak potential and the condenser is charged again. Since during most of the cycle the condenser is more positive than either rectifier anode, the rectifier current flows for only a short time. During the discharge period of the condenser its voltage drops at a nearly uniform rate because the inductance L_1 tends to draw a constant current. The result of this action is that an approximately saw-tooth voltage wave form is applied to the inductance L_1.

In order to compute the action of the filter under the above-outlined conditions, it is necessary to assume that the impressed wave form has a true saw-tooth shape with a peak amplitude equal to the peak amplitude of the alternating-current voltage applied to the rectifier. This voltage, e_i, can then be considered to be represented by the Fourier series

$$e_i=\frac{e}{1+\frac{\pi}{\omega C_i R_L}}\left\{1+\frac{2}{\omega C_i R_L}\left(\sin \omega t-\frac{1}{2}\sin 2\omega t+\frac{1}{3}\sin 3\omega t-\cdots\cdots+\frac{1}{n}\sin n\omega t\right)\right\}, \quad (5)$$

where e is the peak value of alternating-current voltage applied to rectifier;

C_i, input capacitance;

R_L, load resistance;

and f, supply voltage frequency.

The accuracy of the assumptions on which equation (5) is based increases as the voltage variation across C_i decreases, for instance, as C_i and/or L_1 are increased, but in the worst cases likely to be encountered in practice the equation will still give results of sufficient accuracy for most purposes.

It is possible to compute the magnitude of the residual fluctuations in the output voltage from the filter by solving equation (5) for the magnitude of the fluctuation components in the voltage applied to L_1 and then using equation (3) exactly as in the case of the inductance input filter. The fact that the direct-current output from the rectifier and the ratio of the fluctuation components to this direct-current voltage both depend on the magnitudes of C_i and R_L complicates the procedure somewhat by making it impossible to reduce equation (5) to a simple table, as equation (2) was reduced to table I. Equation (5) must be solved using the values of C_i and R_L that apply to the particular problem.

RESONANCE FILTER

A third type of filter to be considered is that in which resonant elements are used. Filters of this type find their greatest application where economy of weight is important, or where considerations of voltage regulation make it desirable to use low-resistance series inductances in the filter circuit. Very low resistance in the series inductance is generally accompanied by low inductance, unless unusually large reactors wound with large wire are used. If the series elements are made parallel resonant at the lowest frequency present in the rectifier output, it is possible to obtain high attenuation to this frequency from comparatively small values of inductance. Alternatively the shunt elements of the filter may be made series resonant to the main fluctuation frequency and a similar effect obtained.

The principal disadvantage of such resonant filter arrangements is that the large attenuation is obtained only at the resonant frequency. The higher frequency fluctuation components are attenuated comparatively little and may reach the output of the filter with large amplitude. A further disadvantage is the fact that the inductance of an iron-core coil, such as a filter reactor, depends on the direct current through the coil. Since this direct current is likely to be variable the inductance may also vary, making it impossible to keep the resonant element resonant at the proper frequency.

For these reasons it is generally best to employ resonant filter elements in conjunction with ordinary series and shunt filter elements so that they do not bear all the burden of filter action. It is also advisable to use series resonant circuits shunted across the filter network, because such circuits carry no direct current and are thus free from the detuning effects of load current changes. The filter used in power supply 2 for the output stage of the amplifier of figure 3 is an example of the combination of series resonant and ordinary filter elements.

If resonant filter elements are combined with ordinary filter elements so that an inductance or capacitance input filter is formed, the resultant network may be solved for the magnitude of the fluctuation components in its output voltage by assuming the input

voltage to have the form given by either equation (2) or equation (5).

If a resonant element forms the filter input the computation becomes more difficult. In general, it will be necessary to determine the shape of the input wave form from an oscillograph record.

CAPACITANCE RESISTANCE FILTER

A fourth type of filter that is occasionally used is one composed of resistance and capacitance elements, instead of inductances and capacitances. The chief application of this type is to power supplies to give fairly high voltage and small current. Its advantages are economy, compactness, and small external field, all of which are due to the fact that no filter inductances are used. Its disadvantages are the need for higher transformer voltages for a given direct-current output voltage and its poor voltage regulation under variable load. Since such filters are not ordinarily used with a variable load, the voltage regulation is not of great importance and it is usually best to use a capacitance input to the filter, thus increasing the direct-current voltage obtainable at

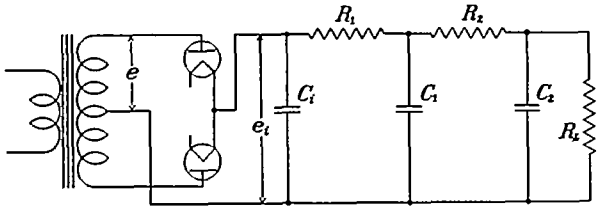

FIGURE 8.—Schematic circuit diagram of capacitance input resistance—capacitance filter.

the filter input from a given transformer alternating-current voltage. Figure 8 shows such an arrangement.

The computation of the smoothing action of this arrangement may be carried out by assuming the input voltage to have the form given by equation (5) and solving the network, consisting of $R_1\ R_2\ .\ .\ .\ R_n$ and $C_1\ C_2\ .\ .\ .\ C_n$, for the fluctuation components of the output voltage by the usual methods.

Assuming the resistances of $R_1\ R_2$, etc., to be large compared with the reactance of $C_1\ C_2$, etc., it is possible to derive a simplified formula, similar to equation (3), the general form of which will be

$$\frac{e_0}{e_i}=\frac{1}{\omega^n\ (R_1R_2\ .\ .\ .\ R_n)\ (C_1C_2\ .\ .\ .\ C_n)}. \tag{6}$$

In the instance of the two-section filter of figure 8 this equation becomes

$$\frac{e_0}{e_i}=\frac{1}{\omega^2R_1R_2C_1C_2}. \tag{7}$$

FILTER PERFORMANCE

Regardless of the type of filter involved, its suitability for a given purpose depends on the magnitude of fluctuation voltage allowable, which in turn is controlled by the magnitude of the lowest useful amplifier input voltage. In the case of turbulence-measuring equipment, 0.001 volt might be set as the lower limit of the range of voltages to be measured, and it would be desirable to keep the effect of power-supply hum, at the amplifier output, less than 1/50 the reading produced by this minimum input voltage E_{min}.

The most important point of introduction of hum in the amplifier is in the plate circuit of the first tube, and the voltage introduced here is equal to the hum component of the plate current multiplied by the coupling resistance of the first tube. That is,

$$E_h=IR_c\frac{E_{ac}}{E_{dc}}, \tag{8}$$

where E_h is the hum voltage across R_c due to plate power supply;
I, plate current of first tube;
R_c, coupling resistor of first tube;
E_{ac}, magnitude of principal fluctuation component in plate voltage;
and E_{dc}, the direct-current plate voltage.

Making allowance for possible hum from other sources by the use of the factor 100 instead of 50, and for the fact that the input voltage is amplified by the first tube before it reaches the point where the hum is introduced, the relation between minimum input and maximum allowable hum may be written as

$$E_{h_{max}}\leqq\frac{A_1E_{min}}{100}, \tag{9}$$

where $E_{h_{max}}$ is the maximum allowable hum voltage across R_c,
E_{min}, minimum input voltage,
and A_1, amplification of first stage.

By the use of equations (2) or (5) with (3), (8), and (9) it is possible to determine whether or not an existing rectifier and filter, or a proposed design, will give satisfactory results. As an example of such a determination, consider the power supply for the high amplification stages of the amplifier described in this report.

This power supply has a three-section inductance input filter with an output of 400 volts direct current at 0.016 ampere, working from a full-wave single-phase rectifier. First, the values

L_1=40 henries,
R_L=25,000 (0.016 ampere at 400 volts),
$\omega\ =2\pi\ (120)$,
and $\frac{e_{ac}}{e_{dc}}=0.667$ (from table I),

are found to satisfy relation (1). This result indicates that equation (2) and table I may be safely used to represent the input wave to the filter. From these it is determined that the principal fluctuation frequency of 120 cycles per second (for 60 cycles per second power supply) will have an input peak magnitude of 267 volts.

The ratio of the magnitude of this fluctuation in the filter output to its magnitude in the input will be given from equation (3) by substituting the values L_1, L_2, and L_3=40 henries, C_1 and C_2=0.00002 farad, C_3=0.00004 farad, and $\omega=2\pi$ (120), and is $\frac{e_0}{e_i}=5.35\times10^{-9}$. From this the value 1.43×10^{-6} volts peak is obtained as the magnitude of the principal hum component in the output from the filter. The ratio of this component to the direct-current output is then

$$\frac{e_{ac}}{e_{dc}}=3.75\times10^{-9}.$$

Since a resistance voltage divider is used to reduce the 400-volt direct-current output from the filter to the 250-volt plate voltage for the first tube, the hum component will be reduced by the same ratio as the direct current and the foregoing ratio will remain the same. That is, $\frac{e_{ac}}{e_{dc}}=\frac{E_{ac}}{E_{dc}}$. Substituting this ratio in equation (8), with I=0.001 and R_c=200,000, gives

$E_h=7.15\times10^{-7}$ volts peak, or 5.06×10^{-7} volts r. m. s.,

which is the hum voltage at the output of the first tube.

Substituting this value in equation (9) using A_1=100 as the amplification of the first stage, and 0.001 volt as the minimum voltage to be measured, the relation is satisfied and no measurable hum should be expected in the amplifier output. Tests of the completed amplifier verify this conclusion.

In the design of a transformer, rectifier, and filter combination, various factors influence the choice of the components used. In this discussion of the problem, only the full-wave single-phase rectifier will be considered, because this is the most common type.

In connection with the filter, little need be said except that the condensers should be of ample voltage rating for the voltage to be used and that the filter reactors should be capable of maintaining the desired inductance when carrying the direct current required from the filter. Generally, if the direct-current voltage does not exceed 400 volts, electrolytic condensers will be satisfactory and have the advantage of compactness. If the peak voltage encountered by the condenser exceeds 400 volts, as might be the case of an input condenser in a capacitance input filter, it is best to use paper dielectric condensers with continuous service direct-current voltage ratings at least 1.5 times the peak voltage.

The filter reactors chosen should preferably be magnetically shielded by heavy cases of cast-iron alloy. In the selection of the reactors due regard should be given to their resistance, as well as inductance, especially if the filter works into a variable load. Furthermore, it is well to minimize the effect of load variation as much as possible by the use of a fairly low-resistance voltage divider on the filter output, and it is necessary to consider the current drawn by this resistor, as well as the load current to the amplifier, when determining the required current carrying capacity of the reactor.

There is little choice available in the matter of rectifiers. Two general types may be had in the sizes suitable for use in power supplies of the type under discussion, namely, hot cathode mercury vapor rectifiers and high vacuum thermionic rectifiers. Of these types, the first should be avoided, unless its large current capacity and low voltage drop are necessary, because of its tendency to produce high-frequency disturbances. Tubes such as the type 80, 83V, or 5Z3 will prove satisfactory and the choice between them depends only on the voltage and current required from the rectifier filter system.

These high vacuum rectifiers have a large and variable voltage drop, the magnitude of which must be determined from the characteristics published by the manufacturer. It is of importance in the determination of the transformer voltage necessary to produce the required output voltage from the system.

The choice of a transformer for use in a given power supply is based on the direct-current output voltage desired, the power required, and the type of filter to be used. Assuming that an inductance input filter is to be used, the transformer voltage and power capacity can be determined as follows. From table I it is found that the required alternating-current voltage from each end of the secondary winding to the center tap is 1.11 times the direct-current voltage desired, neglecting the voltage drop in the transformer, filter, and rectifier. Therefore, to compute the actual alternating-current voltage required to give the desired direct-current output voltage, it is necessary to determine these neglected voltage drops, add them to the desired direct-current voltage, and multiply by 1.11. In this computation it is usual to neglect the voltage drop in the transformer secondary and the effect of transformer leakage reactance. Both of these factors are small in any good transformer.

If a capacitance input filter is to be used, the required alternating-current voltage may be determined in the same manner as for the inductance input filter case except that the ratio of alternating-current secondary voltage to direct-current output voltage must be determined from equation (5). Once this ratio is known for a given filter and load, the rectifier and filter voltage drop may be added to the desired direct-current output voltage and the required alternating-current voltage on each side of the secondary center tap, computed.

The mechanical lay-out of the power supply is not important. The components, with the exception of the rectifier tube, may be arranged in any manner that is convenient. Provision must be made for ventilation in placing the rectifier tube, and the tube should preferably be mounted vertically. If the tube must be mounted horizontally, it should be so oriented that the filaments do not tend to sag toward the plates.

III. THE EFFECT OF THE POWER SUPPLY ON THE AMPLIFIER

In any multistage amplifying system there is a great difference between the energy levels of the first and last stages and, if even a very small portion of the output energy is allowed to return to the input circuits, the amplification characteristics of the system will be greatly affected. The most frequent medium for such back coupling is the internal resistance of a common power supply, such as illustrated by figure 9. Here it will be noted that the internal impedance Z_c of the power supply is common to all plate circuits, hence any voltage drop e_c across Z_c, caused by the plate current of one tube, will transfer energy to all the other stages in the amplifier. Since the plate current of each stage contributes to the voltage drop e_c, and because energy is transferred to each stage by e_c, the exact mechanism of the action of Z_c on the amplifier is a very complex one. However, Terman has shown (reference 8) that quite accurate results may be obtained by neglecting the interaction between all stages but the first and the last. This procedure is justifiable because the difference in energy level between any other two stages is much smaller than that between the first and last. An analysis of the action of Z_c may be made quite easily on this simplified basis.

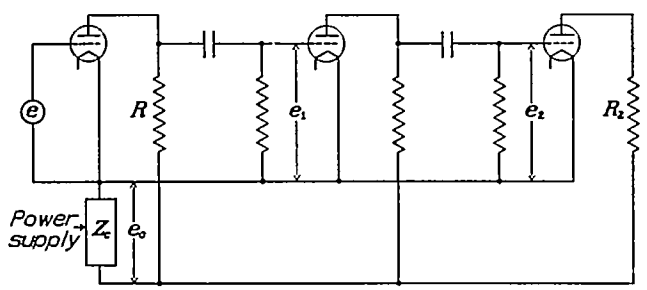

FIGURE 9.—Schematic circuit diagram of multistage amplifier with common plate voltage supply.

If the schematic circuit of figure 9 is redrawn in the form of the approximate equivalent circuit of figure 10, it is seen that the voltage drop across the power-supply impedance, caused by the amplified alternating currents in the last tube is

$$e_c=-\mu_2 e_2\frac{Z_c}{Z_c+R_2+r_{p_2}} \tag{10}$$
$$=e_2A_c=e_1A_1A_c$$

where μ_2 is the amplification factor of last tube;
e_1, a. c. input voltage to second stage;
e_2, a. c. input voltage to last tube;
R_2, load resistance of last tube;
r_{p_2}, internal impedance of last tube;
A_1, amplification between output of first tube and input to last tube;

and

$$A_c=e_c/e_2=-\mu_2\frac{Z_c}{Z_c+R_2+r_{p2}}.$$

Since the impedance Z_c is generally very small compared with r_p and R, the voltage e_c may be represented as a source of negligible internal impedance in series with the plate circuit of the first tube.

Hence

$$e_1=e\frac{-\mu R}{R+r_p}+e_c\frac{r_p}{R+r_p}$$
$$=eA+e_1A_1A_c\frac{r_p}{R+r_p} \tag{11}$$

where e is the alternating-current input voltage to the amplifier;
μ, amplification factor of the first tube;
R, load resistance of the first tube;
r_p, internal impedance of the first tube;
and A, amplification of first stage, neglecting the effect of Z_c.

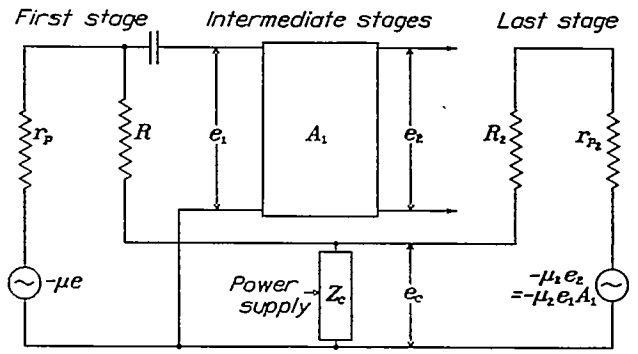

FIGURE 10.—Approximate equivalent circuit of multistage amplifier with common plate voltage supply.

Rearranging equation (11) in the form

$$eA=e_1\left(1-A_1A_c\frac{r_p}{R+r_p}\right)$$

or

$$\frac{e_1}{e}=\frac{A}{1-A_1A_c\frac{r_p}{R+r_p}}$$

an expression for $\frac{e_1}{e}=A_e$, the effective amplification of the first stage, is obtained. For convenience of analysis this expression may be further rearranged by multiplying the right-hand term of the denominator by A, and by $\frac{r_p+R}{\mu R}$, which is $1/A$. That is,

$$A_e=\frac{e_1}{e}=\frac{A}{1-AA_1A_c\frac{r_p}{R+r_p}\frac{R+r_p}{\mu R}}$$

or

$$A_e=\frac{A}{1-AA_1A_c\frac{r_p}{\mu R}} \tag{12}$$

The final result is an expression for A_e, the effective amplification of the first stage, in terms of known or readily measured characteristics of the amplifier. These characteristics, with the exception of μ, R, and r_p are vectors and must be treated accordingly.

In this connection it should be noted that A_1 and A will either be very nearly in phase or very nearly 180° out of phase over most of the frequency range of the amplifier. If an odd number of stages is used in the amplifier, the plate currents of the first and last stages will be approximately in phase, and the general effect of Z_c will be an increase in amplification. If the total number of stages is even, a decrease in amplification will occur. In either case the modification of amplification is not likely to be uniform over the frequency range of the amplifier because Z_c will generally be reactive in character and hence will change in magnitude and phase angle as the frequency changes, thus changing A_c and, through A_c, the effective amplification A_e of the first stage.

Three general methods may be employed to eliminate or reduce the effect of Z_c on the amplification. First, Z_c may be entirely eliminated by the use of separate power supplies. Second, its effect may be reduced by making Z_c unimportantly small over the frequency range of the amplifier. Third, filters may be inserted in each plate circuit to reduce the common coupling effect of Z_c.

The first method is, of course, the most satisfactory as far as ease of obtaining the desired result is concerned but has the disadvantage of requiring several power supplies. However, the stages most likely to give trouble are those of the high-gain amplifier, and these stages generally have very modest power requirements. If advantage is taken of this fact and individual power supplies with small low-current high-voltage transformers and resistance capacitance filters are used, it may be possible to provide the required number of power supplies in the available space and without excessive cost. Sometimes it will be found that the desired result may be obtained by providing a separate power supply for only the first stage.

The second method depends for its practicability on the fact that Z_c in most rectified alternating-current power supplies has a predominantly capacitive reactance. It is possible to make the alternating-current voltage drop across Z_c negligible throughout the high- and medium-frequency ranges and well into the low-frequency range of the amplifier by shunting the output terminals of the power supply with suitably large values of capacitance. However, as the frequency is lowered, the effect of Z_c will eventually become very evident, usually as a violent low-frequency oscillation of the amplifier if an odd number of stages is used or, as a marked lack of low-frequency amplification, if the number of stages is even. Because of this difference in the effect with odd and even numbers of stages, slightly different remedies are usually employed in its elimination.

If the number of stages is odd, the usual method of attack is to add enough capacitance across Z_c to cause the frequency at which its effect becomes troublesome to be lower than the lowest frequency that it is desired to amplify. The amplifier is then so arranged, for instance, by reduction of coupling capacitance, that its amplification decreases rapidly for frequencies less than the desired lower limit; that is, in the frequency range where Z_c begins to have an important effect. By a suitable balance of the increase in amplification due to the effect of Z_c against the decrease in amplification introduced into the amplifier to counteract the effect of Z_c, it is often possible to extend the lower limit of useful amplification to a considerably lower frequency than the constants of the amplifier circuit alone would indicate.

If the number of stages is even, the only solution is to add sufficient capacitance to the power-supply output terminals to make Z_c so small that its amplification reducing effect does not become important at the lowest frequency it is desired to amplify. In the case of turbulence-measuring equipment, or any amplifier to be used at very low frequencies, this method requires very large values of capacitance. However, since the output voltage of the power supply is usually not over 400

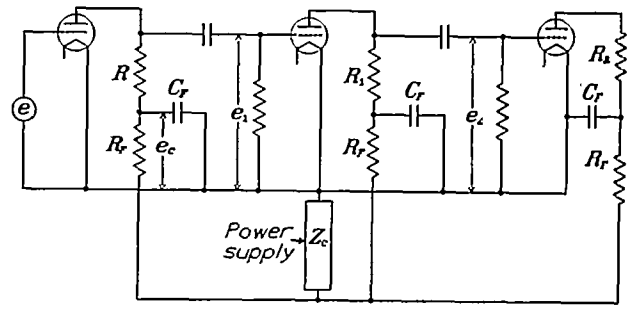

FIGURE 11.—Schematic circuit diagram of multistage amplifier with common plate voltage supply and decoupling filters.

volts, it is generally possible to use electrolytic capacitors and thus obtain large values of capacitance without undue bulk or expense.

Generally, it will be found necessary to provide a separate power supply for the final stage of the system because of the comparatively large drop across Z_c produced by the large alternating-current component in the plate current of this stage. Power supplies for the remaining stages may be provided as convenience or necessity dictate. Usually if an excess of amplification exists in the system, as was the case in the amplifier of figure 3, the desired performance may be obtained most easily by connecting even numbers of stages to the same power supply. If no amplification may be sacrificed, it may be necessary to arrange the circuit so that each power supply serves an odd number of stages.

The third method for eliminating the effect of Z_c, the use of "decoupling filters" is illustrated by figure 11 and by the approximately equivalent circuit of figure 12. This method depends for its operation on the insertion of a resistance R_F in series with each plate circuit, and the use of capacitances C_F connected between the junction of the load resistors R, R_1, R_2, etc., with R_F, and the zero potential side of the circuit.

The function of the capacitors C_F is to provide a low-impedance path to ground for the alternating-current components of the plate current of each tube. The function of the resistors R_F is to insert a high impedance between the bypass circuits and Z_c, the common coupling element of the circuit, thus helping to confine the alternating-current components to the bypasses and to keep them out of Z_c.

The performance of the amplifier power supply combination, when such filters are used, may be estimated by use of equation (12). It is necessary, however, to solve the circuit of figure 12 for an appropriate expression for A_c. If this solution is accomplished, using the same resistance for both resistors R_F and the same capacitance for both capacitors C_F, it is found that

$$A_c=\frac{e_c}{e}=\frac{\mu_2 X_c^2 Z_c}{(r_{p_2}+R_2)(R_F+X_c)^2+Z_c[2(r_{p_2}+R_2)(R_F+X_c)+X_c(2R_F+X_c)+R_F X_c(R+X_c)]} \tag{13}$$

where R_F is the resistance of decoupling filter resistors,

and X_c is the reactance of $C_F=\frac{1}{2\pi f C_F}$.

The other symbols have the same significance as in equation (12). If dissimilar resistances are used for the resistors R_F or dissimilar capacitances for capacitors C_F, an equivalent, but more complicated, expression may be derived.

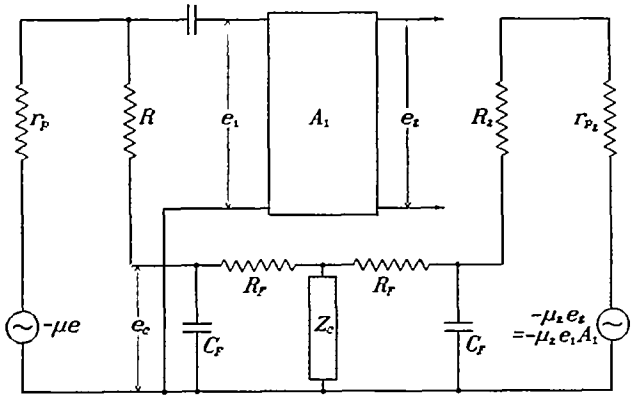

FIGURE 12.—Approximate equivalent circuit of multistage amplifier with common plate voltage supply and "decoupling" filters.

Because the decoupling filter action depends on the maintenance of a high ratio of R_F to X_c, this system also becomes ineffective at very low frequencies, unless large values of capacitance are used at C_F. The system is one that is widely used, however, and, if the output voltage of the power supply is great enough so that high voltage drops in R_F can be tolerated, the filters can be made effective at any reasonable desired low frequency. The usual procedure is first to make the output voltage from the power supply as high as is is economically possible, then to drop this high voltage to that needed for proper operation of the amplifier by making R_F large, and finally to add capacitance at C_F until the desired low-frequency performance is obtained.

If an even number of stages is used in the amplifier, the decoupling filters tend to give somewhat better results than might be indicated by equations (12) and (13), because as the frequency is decreased, X_c increases, and its bypassing action decreases. This result allows R_F to become increasingly a part of the load resistance of the stage concerned, which in turn increases the amplification of that stage, thus tending to offset the decrease in amplification which would normally occur due to the action of Z_c. If an odd number of stages are used, this effect becomes a detriment rather than an advantage because the effect of Z_c is then to increase, rather than to decrease, the amplification.

Of the three described methods for eliminating the common coupling effect of the power supply on a multistage amplifier, the first is undoubtedly the surest and most satisfactory, especially if extremely low frequencies must be amplified. The second method is the simplest, where practicable, and should always be attempted before resort to more complicated systems. The third method is a very useful one, especially where amplification at only moderately low frequencies is necessary.

In the description and analysis of the action of the power supply on the amplifier, as outlined here, it has been assumed that the tubes used were triodes. The results may be extended to multigrid tubes because, in general, the extra elements are at zero potential to the alternating-current components of the voltages being amplified, and the tubes became equivalent triodes.

When the extra element, for example, the screen grid of a pentode or tetrode, must be maintained at some positive direct voltage, it may be connected either to a tap on the plate voltage power supply or to a separate power supply. In either case some impedance will exist between the point of connection and the zero potential side of the circuit and, if several tubes are connected to the same supply, a state very similar to that discussed in connection with the plate power supply will exist. Each tube will then act as a triode composed of the regular control grid, the cathode, and the screen grid acting as an anode and will have a load impedance consisting of the impedance of the screen voltage power supply, which also acts as a common coupling link between tubes.

Fortunately, the conditions will usually be such that the amplification of these accidental triodes will be quite low, and their effect on the main amplifying action of the amplifier will be still lower. The effect may become troublesome, however, and provision for its elimination should always be incorporated in either the amplifier or the power supply. Since the screen voltage required is usually of the order of only 50 volts, conditions are ideal for the application of the decoupling filter method. Excellent decoupling action may be

obtained by dropping the full power supply output voltage down to the required screen voltage through a very high resistance and by using a large bypass capacitance between the screen and the zero potential part of the amplifier circuit. Quite often it will be necessary to use this method only in the first stage of the amplifier, as is the case in the amplifier of figure 3. The remaining stages may usually be supplied with screen voltage from a tap at the proper point on the power supply voltage divider. This tap should be bypassed to the negative terminal of the power supply by a very large capacitance. Because of the low voltage involved, electrolytic condensers are especially suitable for this service.

PRACTICAL DESIGN PROCEDURE

In the design of an amplifier and power-supply combination, due consideration should be given to the factors discussed and every effort be made to arrive at a suitable design before construction. It should not, however, be expected that the completed system will prove to be free from trouble. So many unknown and undeterminable factors are involved in such a highly complex problem as a three or more stage amplifier with two or more power supplies, that the approximations necessary usually fall short of complete validity. In general, the best that may be hoped for is an amplifier that may be made satisfactory by minor changes of circuit constants, rather than by complete reconstruction.

Such an amplifier having been obtained, the procedure to be used in the adjustment of its characteristics is one of the cut-and-try type. Each amplifier is a unique problem and must be treated as such. As an example, the procedure in the case of the amplifier and power, supply system of figure 3 will be considered.

This apparatus was originally intended to consist of three high-amplification stages operating from one power supply and a phase inverter-output stage combination on a separate power supply. Upon completion it was found that the three-stage amplifier had excessive low-frequency amplification and that the phase inverter-output stage combination was unstable. By trial it was found that the instability could be cured by using separate power supplies. With this end in view, the phase inverter was attached to the same power supply as the first three stages and, in addition to curing the trouble in the phase inverter-output stage combination, this change greatly reduced the low-frequency distortion of the first three stages.

Further reduction of the frequency distortion in the first four stages was obtained by changing the screen voltage supply circuit so that the first tube received its screen voltage through a 1-megohm dropping resistor from the 250-volt plate voltage supply, instead of from the 50-volt tap on the power supply voltage divider. It was found necessary to use a paper dielectric condenser for the bypass at the screen grid of the first tube because of the large voltage fluctuations that resulted when an electrolytic condenser, with its more variable leakage resistance, was used. For the 100-microfarad bypass condenser across the 50-volt tap for the screen voltage of the other tubes, electrolytic condensers proved satisfactory.

Tests now indicated that the frequency characteristic of the complete amplifier system was satisfactory, except for a slight loss of amplification at the lower frequencies, but that the over-all amplification was excessive. By a reduction of the amplification at the grid of the fourth stage, thus at the same time producing a reduction of the current through Z_c, it was possible to bring the over-all amplification to the desired level and to improve the frequency characteristic. The final result is illustrated by figure 5.

CONCLUDING REMARKS

It is hoped that the material presented will prove useful to others faced with the problem of designing similar apparatus. No attempt has been made at an exhaustive treatment. The aim, rather, has been to present, under one cover, sufficient data so that a person not particularly familiar with the design of such apparatus may proceed on a sound basis. For additional information the reader should refer to any of the standard works on communication engineering, for instance, reference 8.

National Bureau of Standards,
Washington, D. C., *March 1937.*

REFERENCES

1. Dryden, H. L., and Kuethe, A. M.: The Measurement of Fluctuations of Air Speed by the Hot-Wire Anemometer. T. R. No. 320, N. A. C. A., 1929.
2. Dryden, H. L., and Kuethe, A. M.: Effect of Turbulence in Wind Tunnel Measurements. T. R. No. 342, N. A. C. A., 1930.
3. Mock, W. C., Jr., and Dryden, H. L.: Improved Apparatus for the Measurement of Fluctuations of Air Speed in Turbulent Flow. T. R. No. 448, N. A. C. A., 1932.
4. Schubauer, G. B.: A Turbulence Indicator Utilizing the Diffusion of Heat. T. R. No. 524, N. A. C. A., 1935.
5. Schubauer, G. B., and Dryden, H. L.: The Effect of Turbulence on the Drag of Flat Plates. T. R. No. 546, N. A. C. A., 1935.
6. Dryden, Hugh L.: Air Flow in the Boundary Layer of a Plate. T. R. No. 562, N. A. C. A., 1936.
7. Dryden, Hugh L., Schubauer, G. B., Mock, W. C., Jr., and Skramstad, H. K.: Measurements of Intensity and Scale of Wind-Tunnel Turbulence and Their Relation to the Critical Reynolds Number of Spheres. T. R. No. 581, N. A. C. A., 1937.
8. Terman, F. E.: Radio Engineering. McGraw-Hill Book Co., Inc., 1932.