National Advisory Committee
for Aeronautics
MAILED
JAN 14 1937
To: Library L.M.A.L.

JAN 19 1937

[redacted]

TECHNICAL NOTES

NATIONAL ADVISORY COMMITTEE FOR AERONAUTICS

No. 588

STRAIN MEASUREMENTS ON SMALL DURALUMIN BOX BEAMS IN BENDING

By Paul Kuhn
Langley Memorial Aeronautical Laboratory

Memorial Aeronautical
Laboratory

Washington
January 1937

NASA Technical Library
3 1176 01433 1780

NATIONAL ADVISORY COMMITTEE FOR AERONAUTICS

TECHNICAL NOTE NO. 588

STRAIN MEASUREMENTS ON SMALL DURALUMIN BOX BEAMS IN BENDING

By Paul Kuhn

SUMMARY

Extensive strain-gage measurements were made chiefly on the tension side of five small rectangular box beams constructed of sheet duralumin. The main conclusion was that within the test range the tension cover may be considered as being fully effective but that at any given point on the beam there may be unaccountable variations of 5 percent from the calculated stresses on the thicker sheets tested (0.044 and 0.023 inch) and of 10 percent or more on the thinnest sheet tested (0.014 inch).

INTRODUCTION

Present-day airplane construction is characterized by thin-walled built-up structures. Experience has shown that established and tested formulas for strength of structures do not always give the required degree of accuracy when applied to such airplane structures. The reason for these discrepancies is that some of the fundamental assumptions of the theory are not fulfilled so well as they are in the more solid structures used in other branches of engineering.

One of the points in question is the beam action of thin shells. The engineering theory assumes that plane cross sections remain plane and that no changes in shape of the cross sections occur owing to loading or, if they do occur, that they may be neglected. In beams consisting of thin shells it has been found, however, that these changes may not be negligible in some cases.

It therefore seems highly desirable to check experimentally how valid the usual formulas are when applied to various types and sizes of box beams. The present inves-

tigation deals with fairly small box beams of rectangular section.

TEST OBJECTS AND PROCEDURE

The tests were made of 17ST aluminum-alloy beams. The important (nominal) dimensions of these beams are given in figure 1; this figure also indicates schematically the jig used for attaching the beams to a heavy column.

The load was applied to the beams at the tip-end bulkhead (fig. 1). The direction of the load is indicated in figure 2. Tuckerman strain gages (reference 1) were used to measure the strains in the beams. Three different arrangements of gages were used.

The first arrangement is shown in figure 2(a) and served to check tensile as well as compressive stresses near the root. Three stations were selected along the span of the beam and a gage was attached to each corner of the beam at each station, as indicated by the crosses.

Numerous tests have been made by various investigators of the load-carrying properties of thin sheet in compression. In these tests therefore, attention was concentrated on the tension side of the beams. Figure 2(b) shows the arrangement of gages used for such tests.

A few tests were made with the arrangement shown in figure 2(c). At each station two gages were attached near the edges of the cover sheet and two gages were attached nearer the center line of the sheet. The center gages were simply resting on the sheet without any hold-down devices; in order to prevent small, unavoidable jars from dislocating the gages, a very thin, small patch of plasticine was applied to the sheet and the knife edges of the gages were embedded in it. The gages are very easily attached by this method; all other methods would have been cumbersome and would have required drilling holes into the sheet. The disadvantages of the method are:

(1) Large jars will dislocate the gages.

(2) The gage length becomes somewhat indefinite.

(3) The gages cannot be set to zero or reset during the test when the range of the gages is exceeded.

The loading schedule varied somewhat for several reasons. In general, however, the following schedule was followed. The beam was preloaded twice to 100 pounds without taking readings. One test run was made to 100 pounds; steps of first 12½ pounds and then 25 pounds were taken. The beam was then unloaded in a similar manner. Readings of the strain gages were taken while loading and while unloading. All readings were started 5 minutes after the load had been changed.

A second test run was made to 200 pounds and finally a last run to the capacity of the loading apparatus (about 350 pounds) as indicated in table I.

The first run and the second run were quite frequently repeated one or more times as checks. In the case of beams having the same cover thickness on both sides, the beam was reversed and tested again with the previous compression side in tension.

RESULTS OF TEST ON TENSION SIDE OF BEAMS

General Remarks

The gage arrangement for the tests on the tension side is shown in figure 2(b); the results obtained on the tension side with the arrangement of figure 2(a) are also included in this section.

The two gage readings for each station were averaged before plotting. The two gages differed at times by as much as 10 percent from the average. Occasionally this difference was more than 10 percent but, in general, the agreement was much better.

The station averages thus obtained of the strains were then plotted against applied load. It was found that the points fell on straight lines with a few exceptions where breaks occurred in these lines. A flat value of $E = 10.4 \times 10^6$ pounds per square inch was used in converting the strain readings to stress readings. Ten coupons cut from the root sections of the test beams were tested by the National Bureau of Standards and showed that the secant modulus varied between 10.4 and 10.6×10^6 for zero stress and between 10.2 and 10.4×10^6 for a stress

of 25,000 pounds per square inch. The use of $E = 10.4 \times 10^6$ therefore entails a maximum possible error of 2 percent.

The actual dimensions of the boxes had been measured at a number of stations for the purpose of computing the section modulus. It was found that the maximum variation of sheet thickness and of beam depth from the average was about 1 percent. There was also a slight variation of the section modulus on the tension side due to variation of the effective width of sheet on the compression side; this variation was neglected, and a constant value of the section modulus was used for calculating the stress. The numerical values are given in table I. The maximum error in calculated tensile stress caused by neglecting the variations of sheet thickness, beam depth, and effective width of compression sheet was estimated to be 7 percent.

The ratio of the calculated stress to the observed stress at any station will be referred to in this report as the "stress ratio." Figures 7 to 7 give individual and average test results for each station of the five beams tested.

Discussion of Results

A theoretical solution for the efficiency of the cover sheet in a rectangular box beam without bulkheads is given by Younger in reference 2. The central portions of the cover sheet carry a lower stress than the edge portions on account of shear deformation of the sheet; the ratio of the stress calculated under the assumption of a fully effective section to the actual stress along the edges is taken as a measure of the efficiency of the box cover. The efficiency curve calculated by Younger is shown in figures 7 to 7 and in figure 10; actually it applies only to the case of figure 10 but is shown in the other figures for comparison. This curve applies to sheet that does not buckle. On the compression side the sheet will generally buckle owing to the axial compressive stresses; on the tension side the sheet may buckle as a result of shear stresses. For very thin cover sheets the actual efficiency may therefore be lower than Younger's curve indicates, even on the tension side of the beam. Bulkheads would tend to make the stress distribution across the cover sheet more uniform; i.e., raise the efficiency above the calculated value.

Inspection of the test results given in figures 7 to

7 shows that the observed values scatter so much that there is no discernible tendency to follow any distinct curve.

Of the three cover thicknesses used - 0.014 inch, 0.023 inch, and 0.044 inch - the two thickest ones show, in general, stress ratios below 1; only two stations show a stress ratio exceeding unity by considerably more than the maximum accountable error of 5 percent. Deviations from the smooth curve, however, quite often amount to 10 percent and are apparently entirely haphazard. These deviations are caused by local irregularities of the beam action and are not caused by any errors in reading or mounting the gages, as proved by the coincidence of test points with those for the beams loaded in opposite directions.

The largest and most puzzling deviations occur in the case of the thinnest (0.014 inch) cover sheets. The stress ratios are considerably above unity, which is one reason why the term "stress ratio" is used here in preference to "efficiency."

The high values of the stress ratio occurring at the root of beam 5 may, perhaps, be explained as follows. The load in the edge fibers was partly transmitted to the test jig by a rivet. Inaccurate matching of the holes in the beam and in the jig may have resulted in play at this rivet, throwing the stresses into the central part of the sheet, which was more securely attached. It must be borne in mind, however, that a large part of the load was transmitted to the jig not by the rivet but by the clamping strap. The following theory may also apply.

High values of the stress ratio all along the span such as occurred in beam 3 may have been caused by the fact that the stress was not proportional to the distance from the neutral axis. Excessive deformation of the very thin cover sheet may have occurred around the rivets without straining the sheet on the average enough to produce the theoretical stresses. Apparently the modulus of elasticity was also somewhat higher than the average for very thin sheet, but this effect amounted only to about 2 percent.

Supplementary Tests on Tension Side

In an attempt to check the irregular stress distribution near the root of beam 3, strains were measured on the central portion of the sheet as well as on the edges, using the gage arrangement shown in figure 2(c).

The results of the test are shown in figure 8. The stress ratios for the edge stresses calculated from this figure are 1.02, 1.03, and 1.02 (average) for the bulkhead, the intermediate station, and the root, respectively; the corresponding values from figure 5 are 1.01, 1.12, and 0.95, the irregularities in stress ratio having practically disappeared. At the bulkhead station the sheet stress is about 2 percent lower than the edge stress. At the intermediate station and at the root the sheet stress is somewhat higher than the edge stress, resulting in the average stress over the sections agreeing very well with the calculated values. No such agreement, however, is found at the root where the sheet stress increases very rapidly, and the edge stress still follows an approximately straight line. The average stress over the section is therefore much higher than the calculated value, which is impossible for static reasons. The sheet stress measurements must therefore be considered very questionable at this point.

Another set of measurements with a similar gage arrangement was made on beam 6. The results are shown in figure 9, plotted so as to give a picture of the stress distribution across each station at each load. Figure 9 gives a good idea of the possible variations. It will be noted, for example, that the edge stresses at the root station differ by as much as 8 percent from the mean and that there is a considerable discrepancy between the calculated stresses and the observed average stresses at all sections.

As a final test, the edge stresses in beam 3 were measured first after removing the rivets connecting the tension cover to the tip bulkhead (which was very heavy) and then after removing all rivets connecting the tension cover to the bulkheads. The results are shown in figure 10. The stress ratio with rivets removed is, on the average, about 5 percent lower than with rivets intact, but it is still above unity.

RESULTS OF TEST ON COMPRESSION SIDE OF BEAMS

For design purposes, the action of stiffened sheet under compressive loads is usually idealized by the concept of effective width of sheet over which the total force is assumed to be distributed in a uniform manner. Strain measurements made on the compression side of the beams while the load was increased step by step have been evaluated to give the effective width throughout the stress range covered. From the known external moment and the measured stress (average of two gages), the effective section modulus was computed for each station and each load. The effective width of sheet necessary to give this modulus was then read from a previously prepared graph.

The points for a single test run fell on a smooth curve, but there was very little agreement between consecutive tests on the same beam or between tests on different beams. Figure 11 gives the summary of results on 0.045-inch sheet obtained on three beams; figure 12 gives the summary of results for 0.027-inch sheet obtained on one beam.

The effective widths given in these figures are counted from the rivet line inward. The strip outside the rivet line was assumed to be fully effective because its width is considerably less than 15t, which is usually considered as a safe limiting value for 17ST alloy.

For comparison, the theoretical values of effective widths as computed by the von Kármán formula are shown on these figures. Von Kármán's formula is (reference 3)

$$w = 1.9 \sqrt{\frac{E}{f}}\, t$$

where f is the stress at the edge of the sheet, i.e., the stress in the stiffener. This formula is primarily intended to give the ultimate load that the sheet can carry; the stresses f are then quite high, perhaps 20,000 pounds per square inch or more. For these conditions, the value of 1.9 is usually replaced by a lower empirical value based on ultimate load tests. The theoretical value of 1.9, however, was used for the comparisons because it is the only value that makes the effective width equal to the actual width at the buckling stress.

Inspection of figure 11 shows that the effective width below the buckling stress may be less than the actual width, probably owing to initial buckles. When the buckling stress has been somewhat exceeded, the effective width is larger than the theoretical value and remains larger until a stress of about 38,000 pounds per square inch is reached, which is beyond the standard value of 36,000 pounds per square inch for the yield stress.

The 0.023-inch sheet also shows effective widths larger than the theoretical values (fig. 12) but appears to drop to or below the theoretical curve at a stress well below the yield stress. The points in this region, however, are too few to draw any definite conclusions.

The conclusion drawn from these tests is that the von Kármán formula gives very conservative values for the effective width of sheet at stresses up to about 25,000 pounds per square inch. The converse of this conclusion, however, means that if the effective widths in a structure are established by tests at low stresses (proof stress), the von Kármán formula cannot be used for extrapolating to the yield stress.

The von Kármán formula assumes that the edges of the sheet are simply supported. Actually the loaded edges were very effectively restrained in these tests, approximating built-in conditions, and the other two edges were elastically restrained. These restraints tend to increase the effective width until the yield stress is approached. The effective widths at stresses up to about 20,000 pounds per square inch are therefore better represented by an empirical formula of Wagner (reference 4) based on tests with clamped-edge sheets. This formula gives the effective width as

$$b_e = kb\sqrt{\frac{f_{crit}}{f}}$$

where b_e is the effective width of sheet.

b, actual width of sheet

f_{crit}, buckling stress of sheet.

k, a factor that is about unity when $f < 3\ f_{crit}$ and increases to 2 for $f \approx 20\ f_{crit}$.

According to Wagner, this formula should apply, approximately at least, to other edge conditions. This assumption is probably true in the range indicated, i.e., for stresses up to about 20,000 pounds per square inch, but for higher stresses the formula seems to be on the unsafe side.

FAILURES

Some brief notes on the failures that occurred may be of interest. Table I summarizes this information.

The strain-gage readings on the compression side became unreliable at high loads because local buckling could occur within the gage length. The readings at the tension side on the root station were also questionable at times. In order to provide a common basis of comparison, only computed stresses are given in table I.

Beams 1, 2, and 4 showed large deflections but no definite indication of continued yielding. Beam 3 showed slow continued yielding. All these beams showed a sharply localized buckle as sketched in figure 13.

Beam 5 exhibited tension failure across the first rivet hole outboard of the root at a computed tensile stress of 35,000 pounds per square inch. A local defect (crack caused by drilling or riveting) may be responsible for this failure. The failure is somewhat difficult to explain, particularly if it is noted that this is one of the two beams with the thin (0.014 inch) cover sheet on which the strain-gage measurements showed a marked tendency for the observed stresses to be lower than the calculated stresses.

Beam 4, when tested to a load of 355 pounds, showed no signs of serious distress except large deflections and the previously mentioned local buckle sketched in figure 13. When the beam was tested with the opposite direction of bending moment, however, it failed at a load of 325 pounds owing to the fact that the local buckle carried across to the free edge of the sheet and pulled off the head of the first rivet (fig. 14). The stress developed at this load is only 0.6 of the Euler stress (with $C = 1$) for the sheet between the rivets.

Langley Memorial Aeronautical Laboratory,
National Advisory Committee for Aeronautics,
Langley Field, Va., December 15, 1936.

REFERENCES

1. The Tuckerman Optical Strain Gage. American Instrument Co., Inc., Washington, D. C. (pamphlet), 1934.

2. Younger, John E.: Miscellaneous Collected Airplane Structural Design Data, Formulas, and Methods. A.C.I.C. No. 644, Matériel Division, Army Air Corps, 1930.

3. von Kármán, Theodor, Sechler, Ernest E., and Donnell, L. H.: The Strength of Thin Plates in Compression. Trans. A.S.M.E., APM-54-5, Jan. 30, 1932, pp. 53-57.

4. Lahde, R., and Wagner, H.: Experimental Studies of the Effective Width of Buckled Sheets. T.M. No. 814, N.A.C.A., 1936.

TABLE I

FAILURES IN BOX BEAMS

(Stresses are computed from $f = M/Z$)

Beam	Z_t	Z_c (based on w=15t from center line of rivets)	P (maximum load applied)	M (moment at root station due to P)	f_t (tensile stress at root station)	f_c (compressive stress at root station)	Remarks
			lb.	in.-lb.	lb./sq.in.	lb./sq.in.	
1	0.760	0.300	340	12,420	16,350	41,400	No definite indication of imminent failure.
2	.485	.246	325	11,870	24,400	48,200	No definite indication of imminent failure.
3	.345	.228	252	9,200	26,700	40,300	Slowly yielding.
4	.753	.292	355	12,970	17,200	44,300	No definite indication of imminent failure.
4 (reversed)	.753	.292	325	11,870	15,740	40,600	Failure by local buckle pulling off rivet head.
5	.345	.228	330	12,060	35,000	52,900	Tension failure across rivet hole,

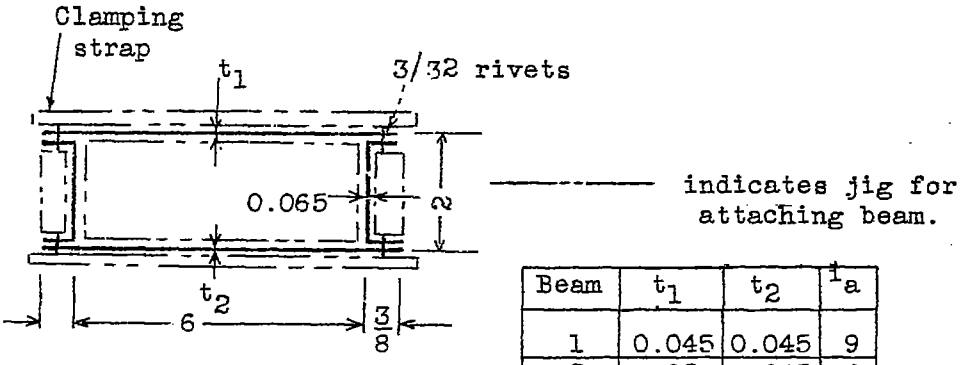

Section A-A

Beam	t_1	t_2	[1]a
1	0.045	0.045	9
2	.023	.045	9
3	.014	.045	9
4	.044	.044	3
5	.014	.045	3
[2](6	.044	.044	6)

[1]Bulkhead spacing

[2]Used only for check test on sheet stress.

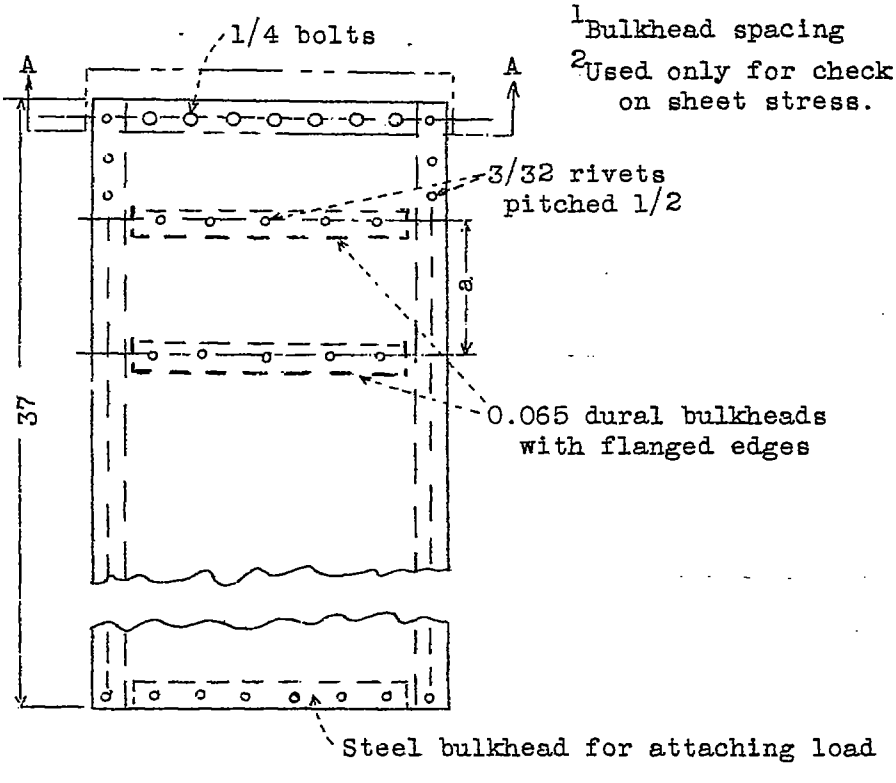

Figure 1.- Dimensions of test beams. All dimensions in inches.

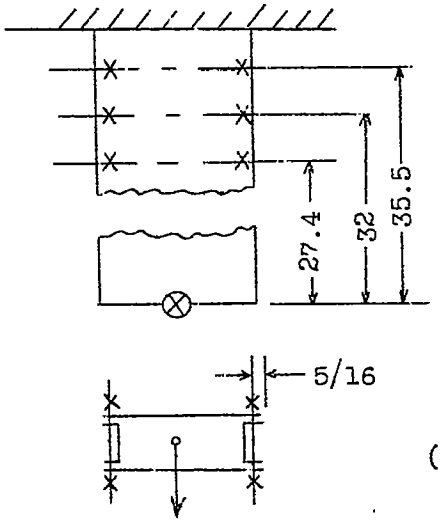

(a) Tension and compression at root.

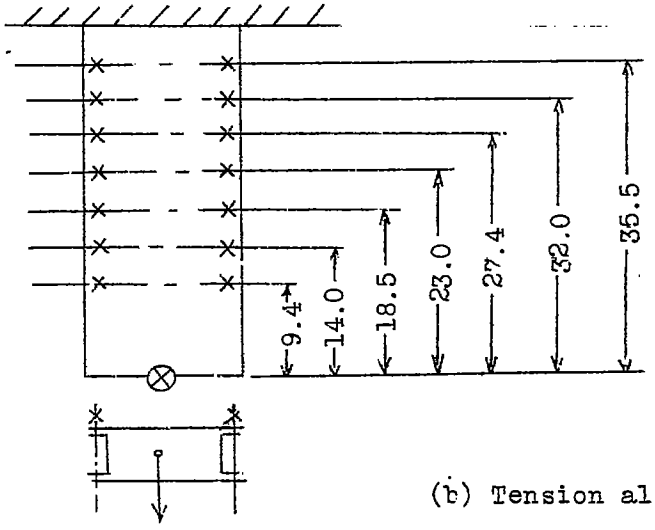

(b) Tension along span.

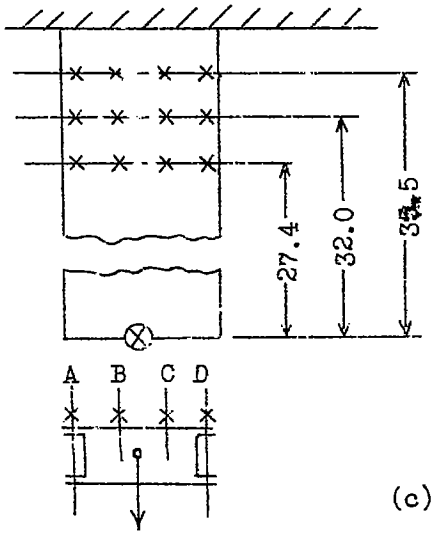

(c) Checking sheet stresses.

Figure 2.- Gage arrangement for different measurements.

All dimensions in inches.

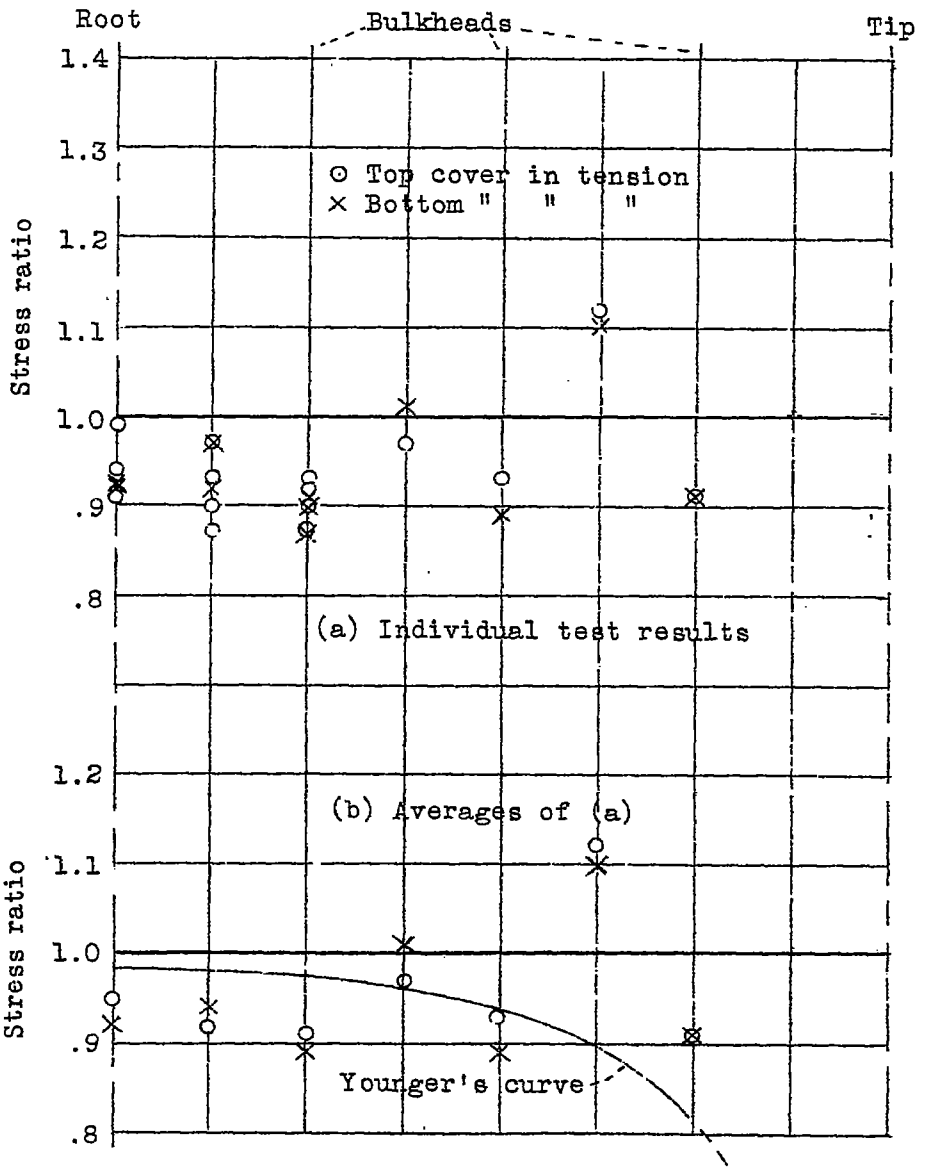

Figure 3.- Test results on tension side of beam 1.

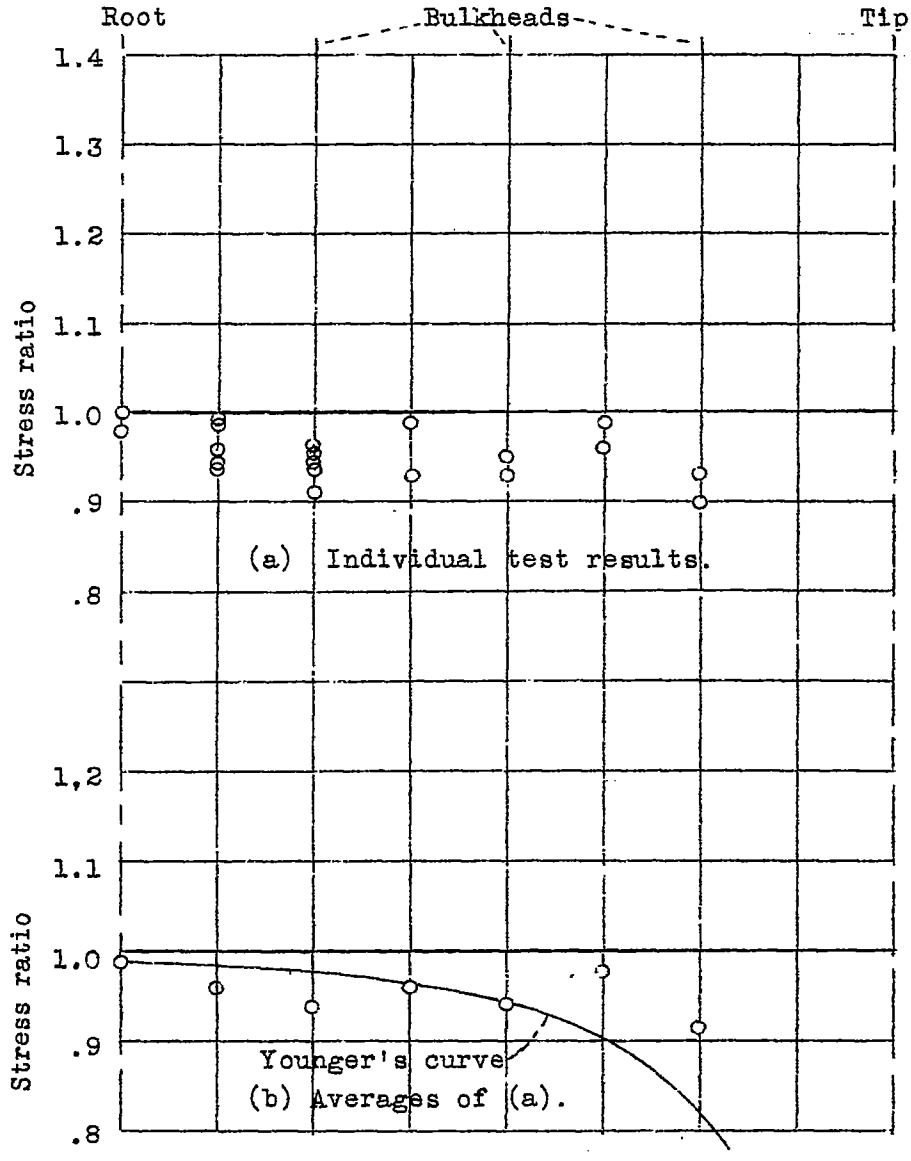

Figure 4.- Test results on tension side of beam 2.

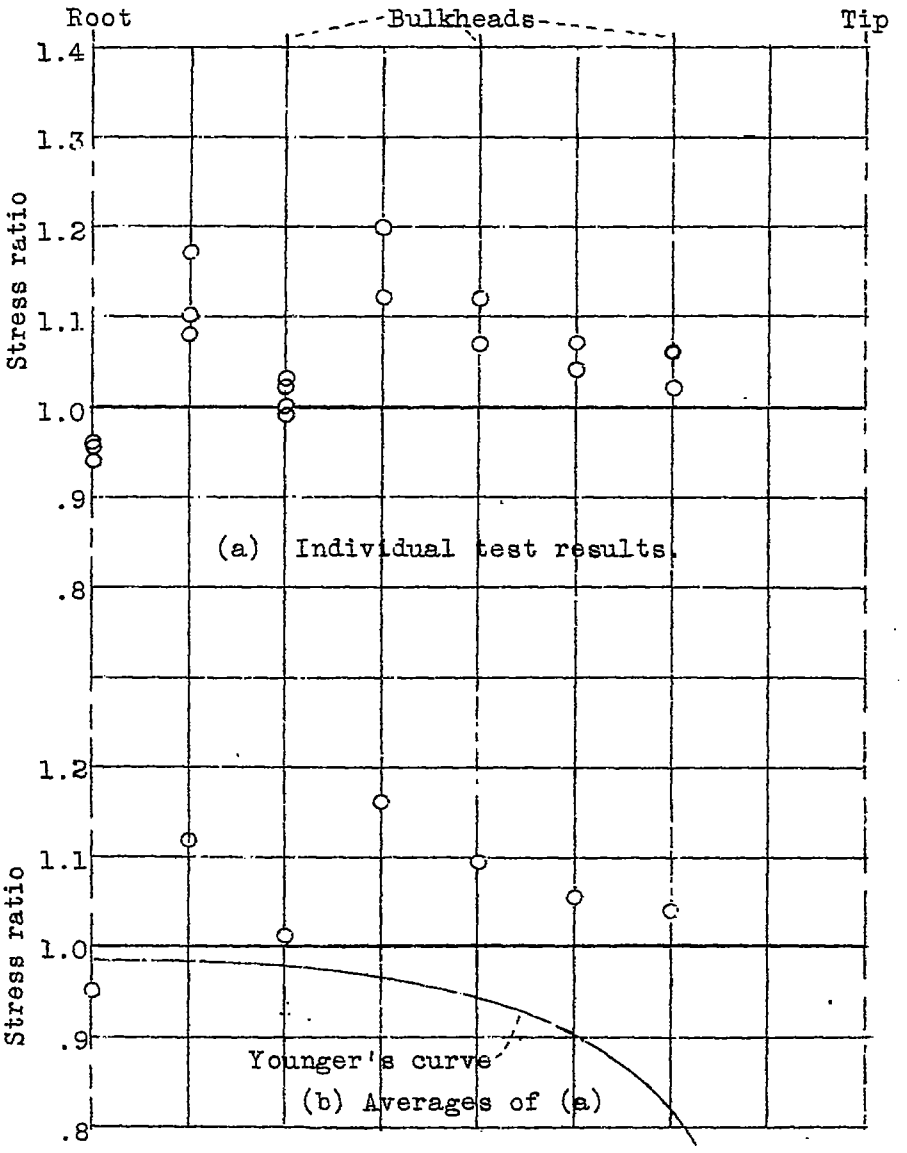

Figure 5.- Test results on tension side of beam 3.

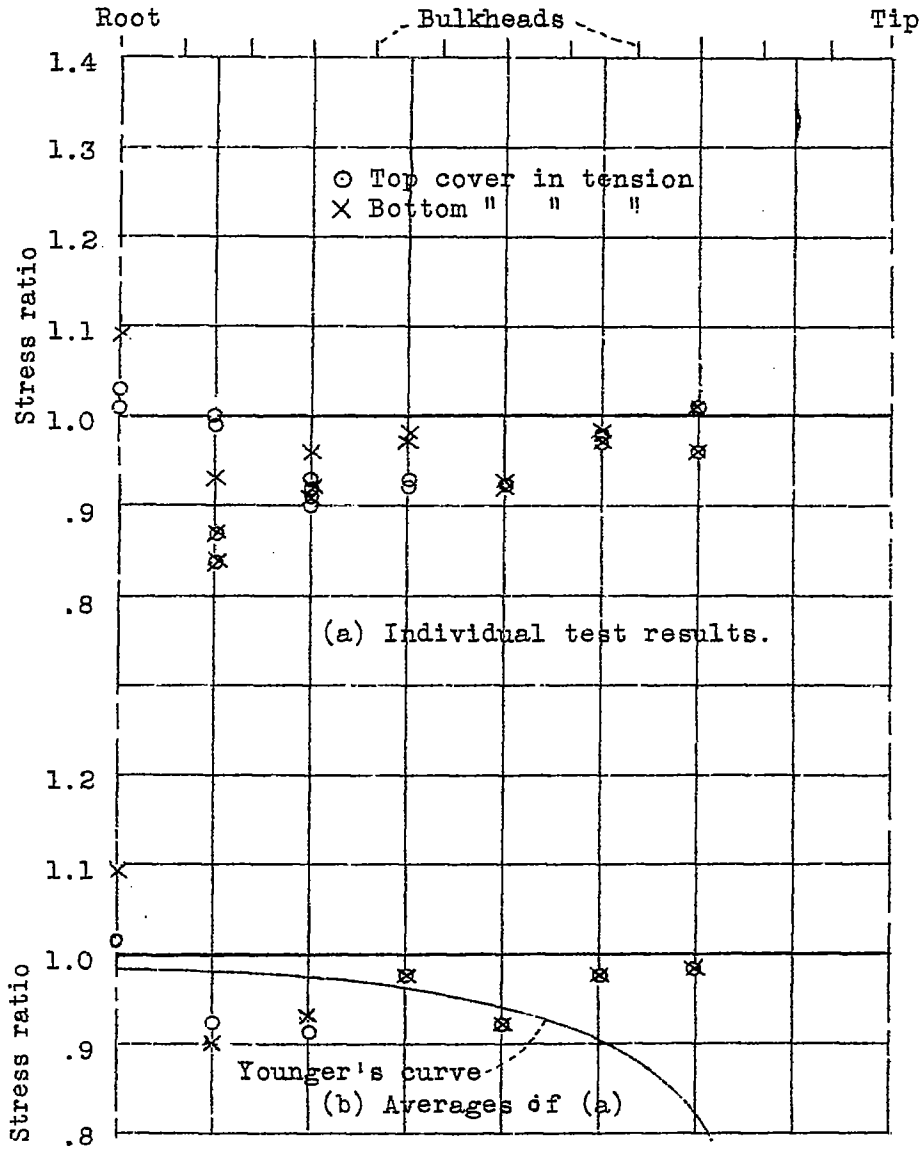

Figure 6.- Test results on tension side of beam 4.

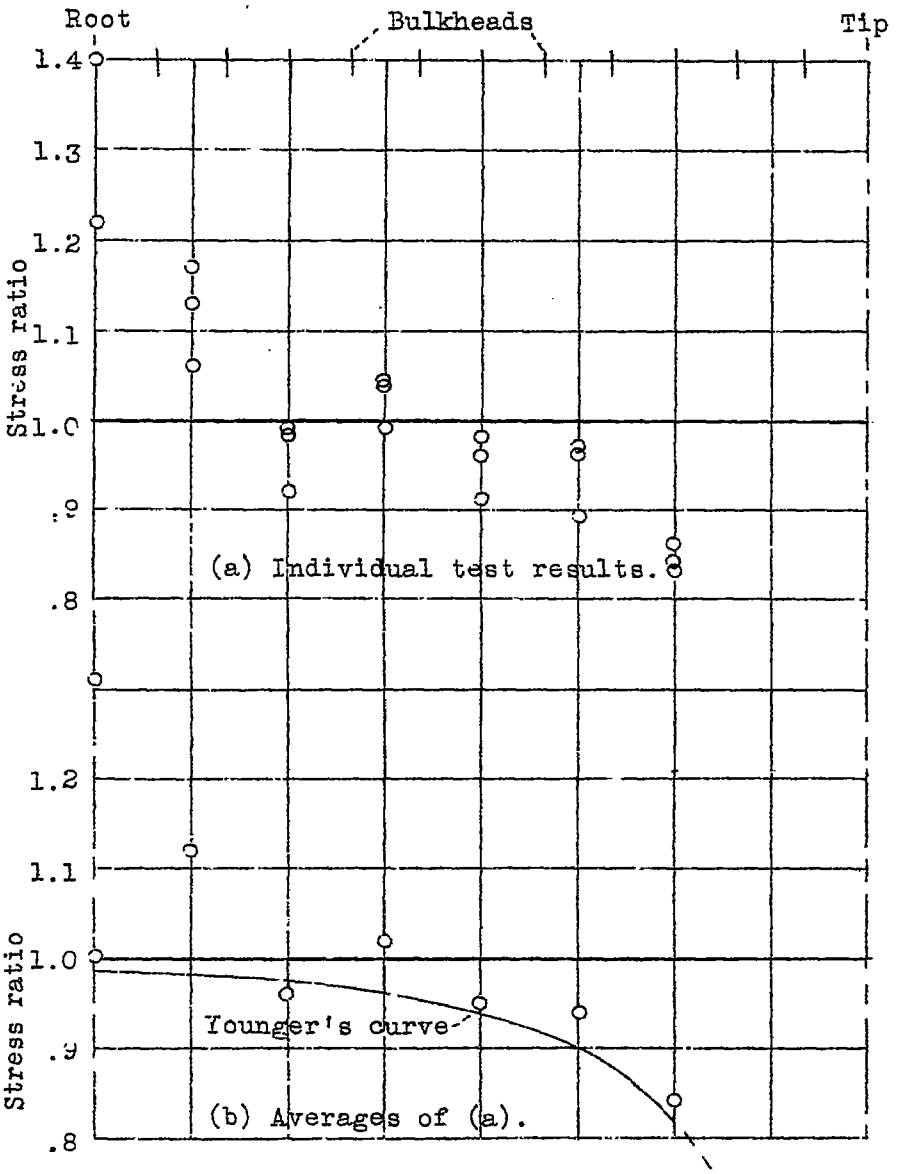

Figure 7.- Test results on tension side of beam 5.

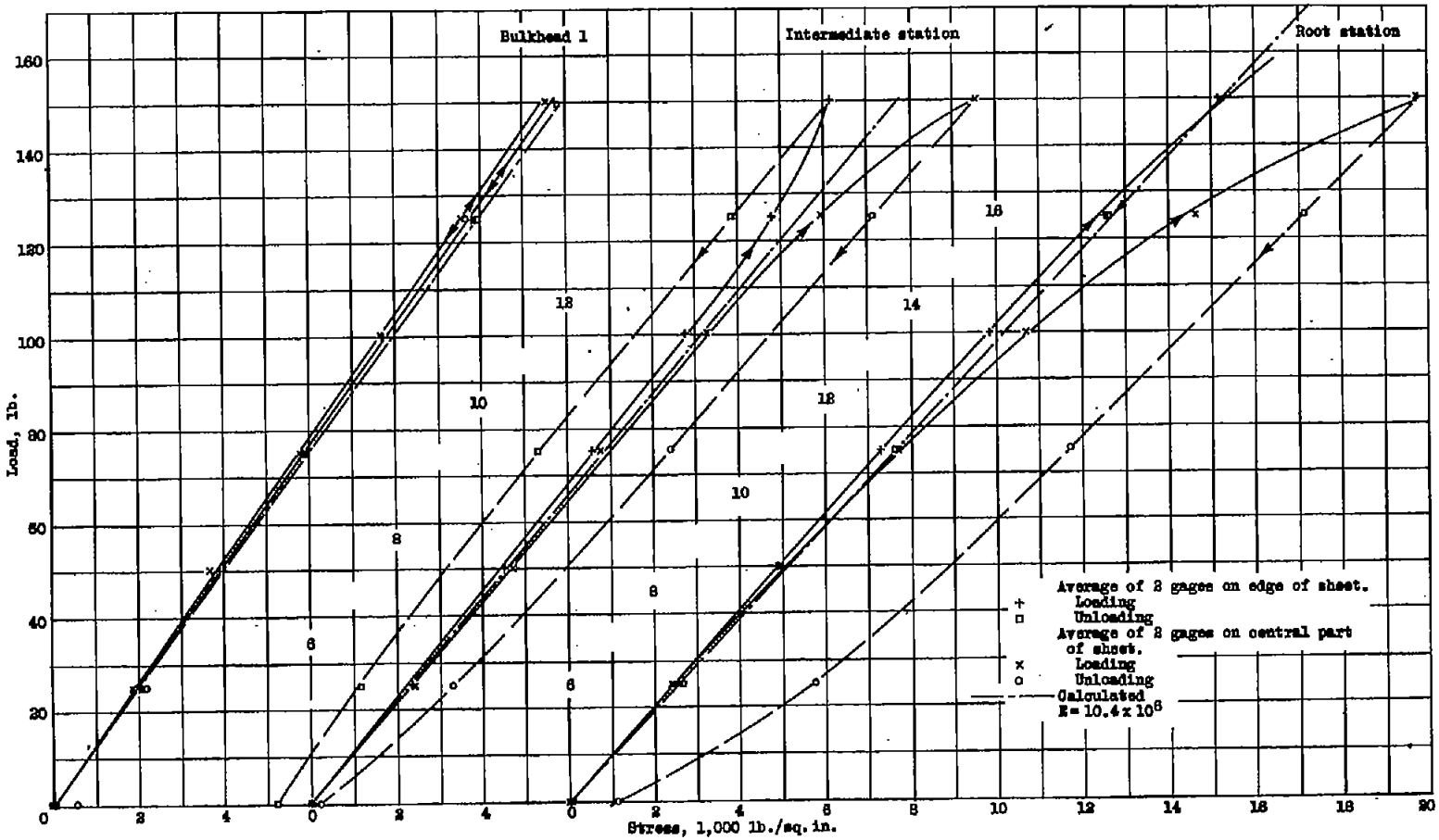

Figure 8.- Supplementary test results for beam 3.

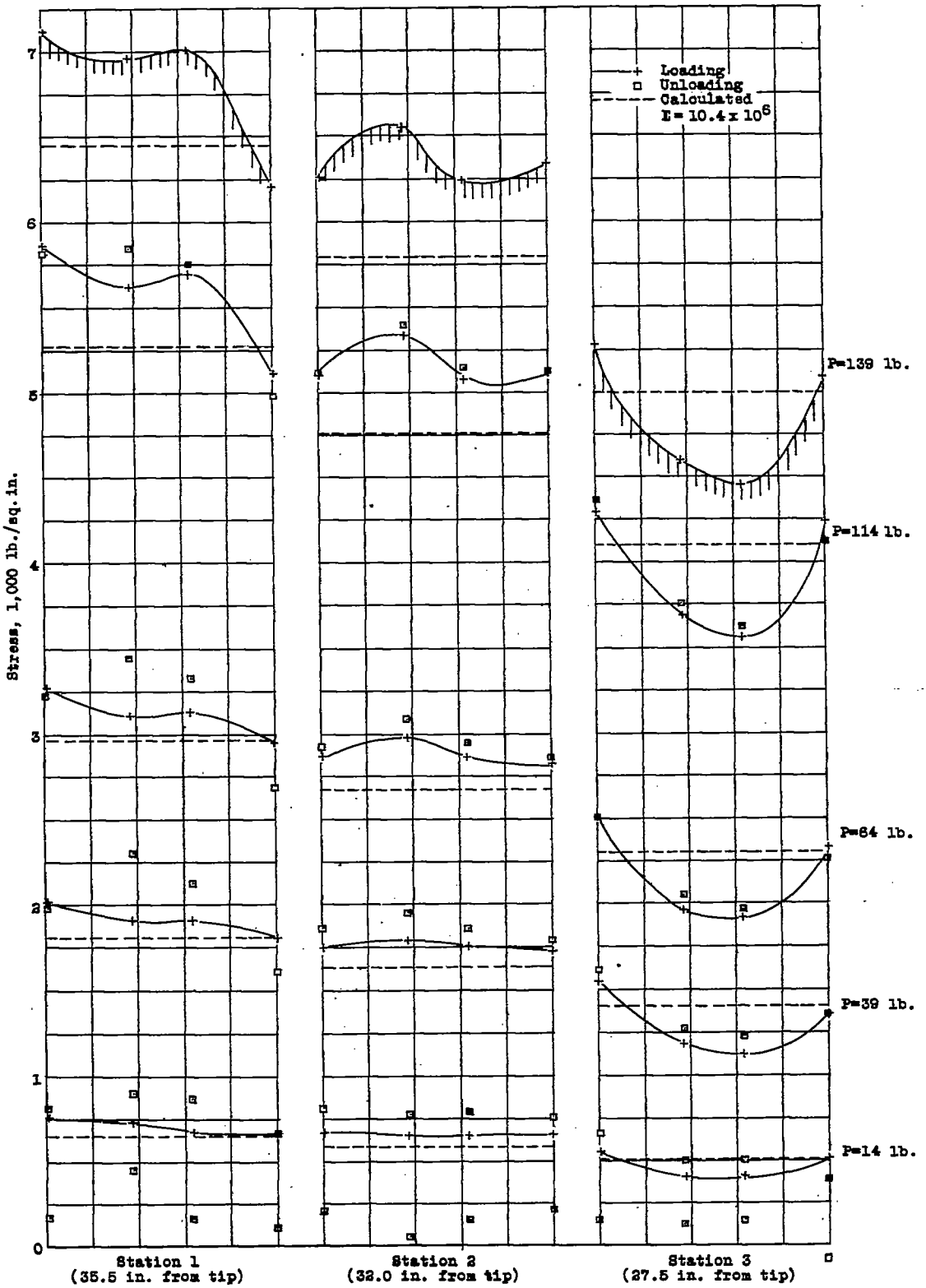

Figure 9.- Stress distribution across three sections of beam 6.

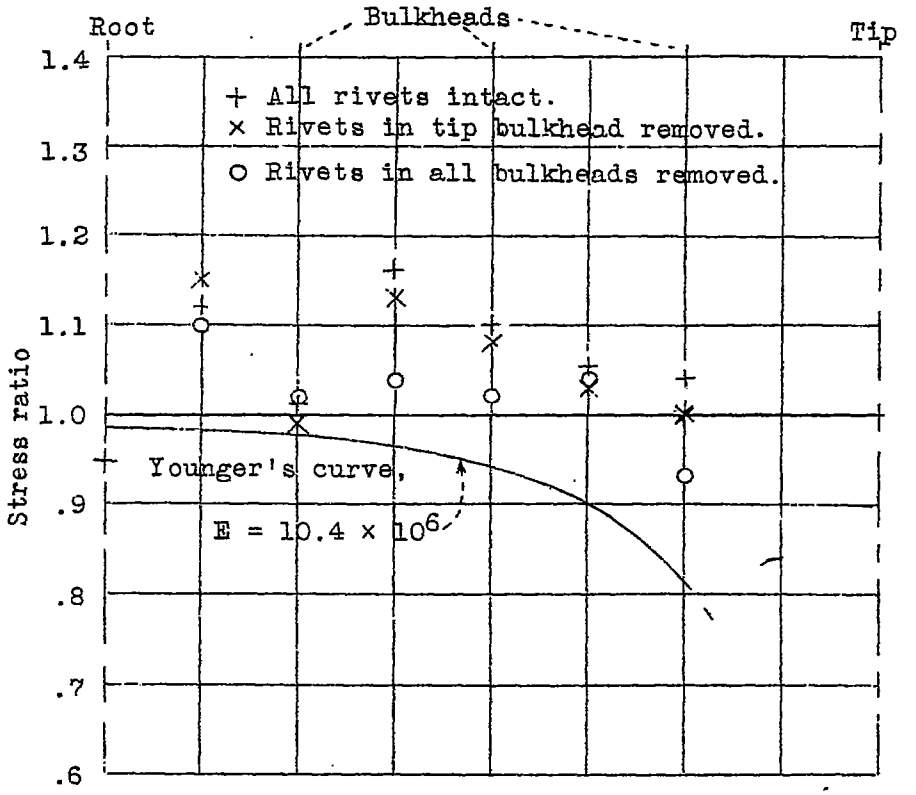

Figure 10.- Test results on beam 3 with bulkheads ineffective.

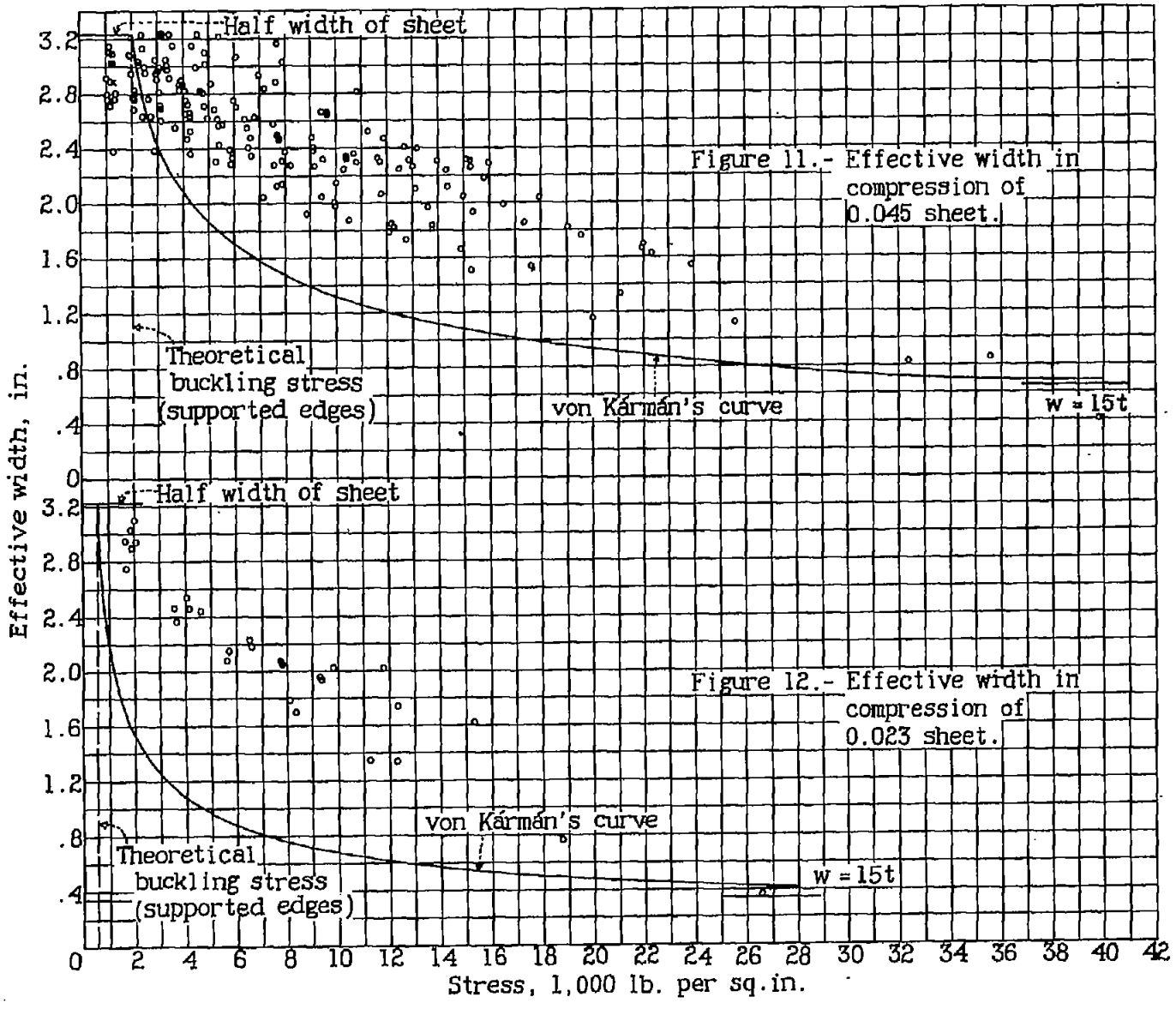

Figure 11.- Effective width in compression of 0.045 sheet.

Figure 12.- Effective width in compression of 0.023 sheet.

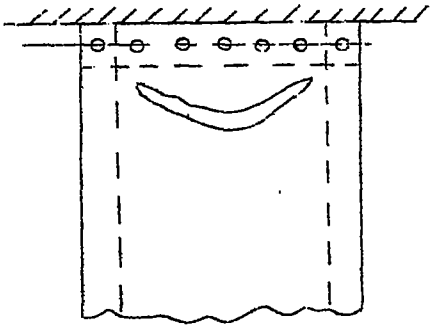

Figure 13.- Buckle at root on compression side.

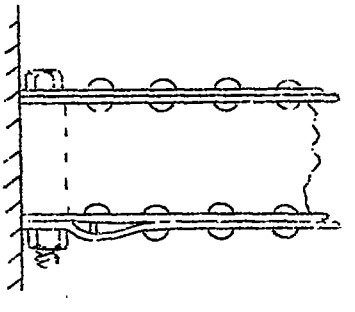

Figure 14.- Failure of beam 4.