AUG 7 1937

Library, L. M. A. L.

Copy 1

TECHNICAL NOTES

NATIONAL ADVISORY COMMITTEE FOR AERONAUTICS

No. 605

NOISE FROM PROPELLERS WITH SYMMETRICAL SECTIONS AT ZERO BLADE ANGLE

By A. F. Deming
Langley Memorial Aeronautical Laboratory

FILE COPY
To be returned to
the files of
Langley Memorial Aeronautical
Laboratory

Washington
July 1937

3 1176 01364 4928

NATIONAL ADVISORY COMMITTEE FOR AERONAUTICS

TECHNICAL NOTE NO. 605

NOISE FROM PROPELLERS WITH SYMMETRICAL SECTIONS AT ZERO BLADE ANGLE

By A. F. Deming

SUMMARY

A theory has been deduced for the "rotation noise" from a propeller with blades of symmetrical section about the chord line and set at zero blade angle. Owing to the limitation of the theory, the equations give without appreciable error only the sound pressure for cases where the wave lengths are large compared with the blade lengths.

With the aid of experimental data obtained from a two-blade arrangement, an empirical relation was introduced that permitted calculation of higher harmonics. The generality of the final relation given is indicated by comparison of measured and calculated sound pressure for the fundamental and second harmonic of a four-blade arrangement.

INTRODUCTION

The subject of aircraft noise is one of great complexity and may be divided into many parts depending on the various possible sound sources involved. On the practical side the question of reducing aircraft noise has, to date, been largely one of insulation of cabins with "soundproof" absorbing materials. This remedy together with reduction of vibration has been very effective in reducing noise in aircraft cabins to levels now considered tolerable.

The largest contributor to aircraft noises is the propeller itself. The aircraft propeller is a very unusual type compared with ordinary sound generators. Comparatively little has been done toward analyzing the mechanism of the propeller as a source of sound, although a more nearly complete analysis of propeller noise would be of value, at least from considerations of attempts to curb or

reduce the noise at the source rather than by its later absorption and reflection.

Much of the published theoretical work on propeller noise is mentioned in a recent paper by Gutin (reference 1), which deals with the noise generated by a propeller owing to the creation of torque and thrust. The present paper deals with the effect of section or blade thickness in regard to propeller noise and the theory is augmented by experimental data. It may be mentioned that the sound pressures calculated from Gutin's relations did not check the values obtained by measurements accomplished here of propellers operating under normal conditions of speed and thrust. Gutin's relation gives values for the fundamental sound pressure of a two-blade propeller many times those measured. His relation gives two components 180° out of time phase with each other, whereas actually there exists another component 90° to either of these components. Hart (reference 2) presents some general considerations and conceptions of the subject of noise from rotating objects. As Hart's paper does not include in any quantitative manner the consideration of thrust or torque, it may perhaps be said to apply rather closely to the subject of the present discussion.

Propeller noise may be classified into the same two divisions that hold for the noise generated by any revolving object. This classification of "vortex noise" and "rotation noise" was introduced in reference 3. After this paper had been completed an article on the same subject appeared. (See reference 4.) Rotation noise for a normal propeller is the more important of the two, under the usual operating conditions of a propeller, because most of the sound energy and loudness (reference 5) is involved in it. The vortex noise is due to the shedding of vortices from the propeller blades and manifests itself as a continuous acoustic spectrum (on a time-average basis). A study of vortex noise is given in reference 6. The rotation noise is due to the revolving pressure field, or the wave enveloping the blades, and is also possible of division into two parts. One part is due to the production of thrust; the other part is due to the thickness of the blades displacing air in both directions perpendicular to the path of the blades.

The problem here is to develop a solution for sound pressure of the fundamental and the first few harmonics of rotation noise at a distant point generated by a propeller

with symmetrical-section, evenly spaced blades, set at zero blade angle, and revolving at tip speeds below that of sound. Such an arrangement will, of course, produce no thrust since there is a symmetry about the plane of rotation and no possibility of an angle of attack existing to produce a flow. The upper speed limit, as far as this presentation is concerned, may be said to be determined by the speed that produces local velocities equal to that of sound and it will, in general, be determined by the thickness ratio and shape of the blade sections considered. This upper limit will, for most thickness ratios and streamline shapes used, be about 0.7-0.8 the velocity of sound.

DERIVATION OF FORMULAS

Figure 1 represents the geometry of the problem of rotation noise generated by revolving symmetrical-section blades with zero blade angle. It is assumed in this paper that the sound emanates from a narrow ring and that the movement of the blades can be represented for purposes of sound generation by an infinite number of infinitesimal line pistons in this ring, each of which is given a phase appropriate to its position around the ring.

In figure 1, O is the center of the disk described by the revolving blades. In plan view the axis of the blades is denoted by the line AB, the disk by COD, and the observer's position by P. In elevation view the axis is through O perpendicular to the paper; the disk is denoted by ACBD. The center of gravity of the elementary sources is described by the radius KR. The angle the radius vector r (or l) makes with the axis of rotation is β. It is seen that, as the angle θ is changed continuously, the distance from the observer at P changes periodically by the amount $\pm x$. It is assumed that l is large compared with R.

For purpose of analysis let it be assumed that the fundamental and first few harmonics of the rotation noise emanate from a ring of mean radius KR. The area of the sources on one side of the disk would then be

$$S = 2\pi H K R^2 \tag{1}$$

where H is a small quantity less than 1 and K, a quantity near to but less than 1. The quantity H may be

termed the "width" of the equivalent ring and is given as a fraction of the radius R.

Since the blades are of symmetrical section about the chord, have zero blade angle, and operate in quiescent air, it is seen that a symmetry exists about the plane of the disk. It can therefore be assumed that only one-half the blade, or one side of the chord, is operating and working next to a wall of infinite extent. This fact allows the use of Rayleigh's relation (reference 7) for the potential at a point due to a source in a wall of infinite extent. (If a thrust is exerted, a more general relation would be used giving the potential due to a double source as well.) Rayleigh's relation is

$$\varphi_1 = -\frac{1}{2\pi}\frac{\partial\varphi}{\partial n}\frac{e^{-ikr}}{r}\,dS \tag{2}$$

where

φ_1 is the velocity potential at any point in question due to source dS

$\frac{\partial\varphi}{\partial n}$, velocity normal to plane

r, distance from the elementary source to the point in question

$k = \frac{2\pi f}{c} = \frac{2\pi}{\lambda}$

f, frequency

λ, wave length

c, velocity of sound

dS, area of elementary source

For the purposes of the problem in hand, these relations become

$$\frac{\partial\varphi}{\partial n} = \dot{\xi} = \dot{\xi}_0\,[A_n \sin(nwt + \epsilon_n) + A_{2n} \sin(2nwt + \epsilon_{2n}) + A_{3n} \sin(3nwt + \epsilon_{3n}) + \ldots\ldots A_{qn} \sin(qnwt + \epsilon_{qn}) + \ldots] \tag{3}$$

and where $\dot{\xi}_o = K\ V \times$ (function of size and shape of section used)

n, number of blades

q, number of harmonics

$w = \frac{V}{R}$

V, tip velocity

R, tip radius

$dS = H\ K\ R^2\ d\theta$

The factor k can then be written qnw/C.

Putting the time and space phases for $\partial\varphi/\partial n$ in equation (2),

$$\varphi_{1qn} = -\frac{\dot{\xi}_{qn}\ dS}{2\pi r}\ e^{i(qnwt+\epsilon_{qn}-qn\theta-kr)} \tag{4}$$

where r is the distance from elementary source to point P and $\dot{\xi}_{qn} = \dot{\xi}_o\ A_{qn}$. Taking into account all the elementary sources dS,

$$\varphi_{qn} = -\frac{1}{2\pi}\iint \frac{\dot{\xi}_{qn}\ e^{i(qnwt+\epsilon_{qn}-qn\theta-kr)}}{r}\ dS \tag{5}$$

where

$$r = l + x$$

$$= l + KR \sin\beta \sin\theta$$

Since x is considered small compared with l, it can be neglected in the denominator with small error but such a procedure cannot be followed in the exponent, since there x is a phase factor quite comparable with the wave length λ. Equation (5) is then written

$$\varphi_{qn} = -\frac{\dot{\xi}_{qn}\ H\ KR^2\ e^{i(qnwt+\epsilon_{qn}-kl)}}{2\pi\ l}$$

$$\times \int_0^{2\pi} e^{-i(qn\theta+k\ KR\ \sin\beta\ \sin\theta)}\ d\theta \qquad (6)$$

Let equation (6) be written

$$\varphi_{qn} = M \int_0^{2\pi} e^{-i(qn\theta-m_1\ \sin\theta)}\ d\theta \qquad (7)$$

where

$$M = \frac{-\dot{\xi}_{qn}\ H\ KR^2}{2\pi\ l}\ e^{i(qnwt+\epsilon_{qn}-kl)}$$

and

$$m_1 = k\ KR\ \sin\beta$$

Expanding the exponential in the integral,

$$\varphi_{qn} = M \int_0^{2\pi} (\cos qn\ \theta - i\ \sin qn\ \theta) \Big\{ J_0(m_1)$$

$$+ 2 \sum_{h=1}^{\infty} J_{2h}\ (m_1)\ \cos 2h\ \theta$$

$$- 2i \sum_{h=1}^{\infty} J_{2h-1}\ (m_1)\ \sin\ (2h - 1)\ \theta \Big\} d\theta \qquad (8)$$

This equation becomes

$$\varphi_{qn} = (-1)^{qn}\ 2\pi\ MJ_{qn}\ (m_1) \qquad (9)$$

Having the potential at the point P, the sound pressure p_{qn} is readily obtained since

$$p_{qn} = -\rho_0\ \frac{\partial\varphi_{qn}}{\partial t} \qquad (10)$$

where ρ_0 is the mean density.

On differentiating the exponent in M,

$$p_{qn} = \frac{i(-1)^{qn}\ qnw\ \rho_o\ H\ KR^2}{l}\ J_{qn}(m_1)\ \dot{\xi}_{qn}\ e^{i(qnwt+\epsilon_{qn}-kl)} \qquad (11)$$

As the only concern is with the sound-pressure amplitude, all phase factors can be neglected. Then equation (11) becomes

$$\left|p_{qn}\right| = qnw\ \rho_o\ \frac{H\ KR^2\ J_{qn}\ (m_1)\ \dot{\xi}_{qn}}{l} \qquad (12)$$

Remembering that

$$w = \frac{V}{R}$$

therefore

$$m_1 = k\ KR\ \sin\ \beta$$

$$= qn\ K\ \sin\ \beta\ \frac{V}{C}$$

and

$$\dot{\xi}_{qn} = \dot{\xi}_o\ A_{qn}$$

$= KV\ A_{qn} \times$ (function of mean section size and shape over outer portion, HR)

$= KV\ A_{qn}\ \frac{a}{b}$ (as first approximation where a and b are measured at radius KR; a/b is small, about 0.1)

where a is 1/2 thickness

b, chord

And, since equation (12) gives the maximum value instead of the root mean square, the equation must be divided by $\sqrt{2}$. Finally,

$$p_{qn} = \frac{\rho_o\ qn\ a\ A_{qn}\ HR}{\sqrt{2}\ bl}\ K^2 V^2\ J_{qn}\ (m_1) \qquad (13)$$

The sound pressure of the fundamental and lower harmonics is thus obtained in terms of the aerodynamic velocity head $\rho_0 K^2 V^2$, the geometry of the arrangement, and the acoustic properties of the medium.

EXPERIMENTAL CHECK ON ACCURACY OF THEORY

Before any calculations can be made, some of the values in equation (13) must be ascertained. All values except A_{qn}, K, and H are directly known or can be found without any intuitive considerations of the problem. The values A_{qn}, K, and H will now be established.

For rectangular excitation or rectangular wave form it can be shown that the Fourier coefficient is given by

$$A_{qn} = \frac{4}{q\pi} \sin^2 \frac{qnb}{4g} \tag{14}$$

For small angles, $\frac{qnb}{4g}$

$$A_{qn} \cong - \frac{qn^2 \ b^2}{4\pi g^2} \tag{15}$$

where g is any radius from 0 to R. This relation would hold good, of course, only for values of the radius g describing the outer portions, which is the region concerned.

Assigning values to the fractions H and K is a matter of a little less definite procedure. If it be assumed that the effectiveness of the radius in producing the sound pressure of the fundamental at a distant point varies as the x power of the radius g, the radii describing the centers of gravity would be $(x+1)/(x+2)R$.

As a result of measurements of the radiated sound pressures of the fundamental frequency in the plane of rotation ($\beta = 90^\circ$) from two identically equally spaced rotating blades with symmetrical sections and zero blade angle, it was found that the sound pressure p varies as the fourth power of the tip speed for tip speeds below that of sound. One may from this result expect the center

of gravity of the sound sources in the disk of the rotating blades to be at a radius somewhere near the tip. Neglecting end and distribution effects, if this sound pressure varied as the fourth power of the radius, the radius defining the centers of these sources would be at 5/6 R, or 0.83 R. Henceforth K will be 0.80 (a slight reduction for end effects) for the fundamental and there will probably be small error in using this value for all harmonics.

If, then, it is assumed that the area under the curve

$$\int_0^R g^x \, dg$$

is distributed along the radius with an amplitude equal to the value of g^x at $g = (x+1)/(x+2)R$, it will be found that this area takes up a distance

$$\frac{(x + 2)^x R}{(x + 1)^{x+1}}$$

along the radius. For $x = 4$ this distance becomes 0.41 R. Although of no particular significance, this value is very nearly equal to $2(1 - K)$. The fraction H will henceforth be used as 0.40, the round value nearest to 0.41.

Values can now be substituted in equation (13) and the accuracy of the theory checked by comparing calculated and observed sound pressure; the fundamental will, of course, be considered first. The values substituted are:

$\rho = 1.2 \times 10^{-3}$ grams/cm^3, air density

$q = 1$, order of harmonic

$n = 2$, number of blades

$a = 0.39 \times 2.54$ cm, 1/2 blade thickness

$b = 3.90 \times 2.54$ cm, blade chord

$R = 4.0 \times 12 \times 2.54$ cm, blade length (radius to blade tip)

$K = 0.80$, fraction of R to center of gravity of sources

V = tip speed in cm/sec.

$l = 80 \times 12 \times 2.54$ cm, distance of microphone to center of revolving blades

$m_1 = qn \sin \beta \, KV/C \; (\sin \beta = 1.0)$

$C = 1100 \times 12 \times 2.54$ cm/sec, velocity of sound

$H = 0.40$, fractional width of equivalent ring

The results are shown in the following table:

KV/C	Calculated $p_{1 \times 2}$ $qn = 1 \times 2$ (bar)	Observed $p_{1 \times 2}$ (bar)
0.603	0.72	0.82
.541	.47	.51
.380	.103	.11

The comparison is quite favorable for the fundamental sound pressure but, when checking the theory with experimental data for higher harmonics, it was found that appreciable differences occurred. This difference, however, only gradually became larger as higher and higher order harmonics were considered; the error for the second harmonic, for instance, was not unduly large.*

*Although the relation $\dot{\xi}_{qn} = KV \, A_{qn} \frac{a}{b}$ gives a correct result, the factor a/b should be nearer $2a/b$. Apparently, errors in other factors are compensating. No claims are made relative to the favorable check here between the theory and experimental results; other than for purpose of sound calculations, the results are fairly good. The factors K and H, for instance, could hardly be said to be rigorously obtained; strictly speaking, the integration should be carried out over the entire disk.

Apparatus

The "full-scale" blades used in this work were rotated by a 200-horsepower, 3,600 r.p.m., slip-ring motor capable of being set at any angle in the azimuth circle. This motor was specially built by the General Electric Company for the N.A.C.A. for propeller-noise and other research. Figure 2 shows a propeller mounted on this motor. This motor is located on a beach 235 feet from the nearest building, within which the motor control and the sound recording apparatus are situated. The microphone is placed 80 feet from the motor.

The microphones used are the Western Electric No. 618-A electrodynamic type and are connected to the sound-recording apparatus by shielded cable. The recording and measuring equipment used in this work includes amplifiers, filters, attenuators, and an automatic-recording sound analyzer. A schematic sketch of the hook-up of this equipment is given in figure 3 and a photograph of the apparatus in figure 4. The principle of operation of this analyzer is given in reference 8, but the analyzer has subsequently been much improved.

The data to follow giving sound pressure against K V/C were obtained from sound-analyzer records, which were corrected for errors due to the over-all frequency characteristics. Over-all calibrations from microphone to analyzer were made before and after each series of runs and the variations in over-all amplification were never more than a few percent. The calibrating unit used was a Western Electric AME-29 unit built to accommodate 618-A microphones.

The accuracy of the sound pressures given in this paper is comparable with the accuracy of the output of the AME-29 calibrating unit except for errors in measuring the analyzer records. The error involved in measuring these records is not over 5 percent. It will be noticed that the analyzer records (fig. 5) give a fairly definite pattern for the fundamental and harmonics and, by systematic measurement, errors of only a few percent are involved.

The calibration was always taken at 500 cycles with 0.20 volt impressed across the calibrating unit, which at that frequency gives a sound pressure with the dynamic microphone of 1 bar. The voltage across the calibrating unit was always set to within 2.0 percent. It is well to

state that, as the blades are not working in quiescent air, the sound pressures of the harmonics are by no means constant with time but fluctuate about their mean values. It is, of course, quite feasible to obtain representative values from the plotted values by taking sufficient data.

It may be added that for the amplitude ranges used in this work, no nonlinearity existed in any part of the equipment.

A drawing of the blades with important dimensions is given in figure 6. It will be noticed that the blades have a slight taper with the section shape the same over the outer two-thirds. The slight taper of the blades was necessary to prevent blade flutter in the speed range used.

Procedure

For data on sound pressure against KV/C the motor was set so that the microphone was in the plane of the disk ($\beta = 90^\circ$). Analyzer records were then taken at different motor speeds over a range dictated by (1) the amplitude range possible on the analyzer records with the over-all amplification fixed (attenuators set) and (2) the level of "background noise."

The data for polar diagrams of sound pressure distribution were obtained by taking analyzer records at a constant motor speed for every 15° about the azimuth circle, the microphone being fixed and the motor rotated in azimuth.

The time required to generate the pattern on the film of any harmonic is quite appreciable; for the system used to measure the analyzer-record amplitudes, a fair time average amplitude is therefore obtained. Slightly over 2 minutes is required to cover the range of each record (0-350 c.p.s.). Perhaps it is well to state here that the time constants in any part of the entire system are very small compared with (1) the time of transit to produce a pattern for any harmonic and (2) the usual time of fluctuation of the rotation noise itself. These are all necessary characteristics if reasonable accuracy is to be obtained because the blades are always operating in air that can hardly be said to be quiescent, and the amplitudes therefore fluctuate about their mean. In general, such fluctuation increases with the order of the harmonic.

EMPIRICAL CORRECTION FOR HIGHER HARMONICS

Actually, the sound does not emanate from a ring near the tip but is distributed over the entire disk. It is to be expected that discrepancies would enter when higher orders are considered. This question is one of ratio of diameter $2KR$ to the wave length λ. It is of interest to note this ratio in terms of other quantities, which turns out to be the argument of the Bessel function in equation (13) divided by π with $(\sin \beta = 1)$.

$$\lambda = \frac{C}{f} = \frac{2\pi\ C}{qn\ w} = \frac{2\pi\ RC}{qn\ V} \tag{16}$$

then

$$\frac{2KR}{\lambda} = \frac{2KR\ qn\ V}{2\pi\ \ RC} = \frac{qn\ KV}{\pi C} \tag{17}$$

Thus far the question of "finite amplitudes" has received no attention in this paper. This question has been omitted owing to the mathematical difficulties involved and also because it was not considered sufficiently important in this work. In the first place, it is to be remembered that equation (13) does not include large-amplitude phenomena but, nevertheless, a fair check for the calculated value with experimental value of the fundamental sound pressure was obtained.

In work accomplished at the Bell Laboratories (reference 9) it was shown that for large amplitudes there is a shift of energy in the acoustic spectrum from the fundamental to the second harmonic. The reported tests dealt only with plane waves but the paper presents results from which deductions in regard to spherical waves can be made. Measurements are described of the sound pressure of the fundamental and second harmonic taken in a long tube, one end of which was connected to a generator of intense sinusoidal sound pressures. The relations taken from Lamb's Hydrodynamics give p_1 as the fundamental and p_2 as the second harmonic sound pressure. This work shows that the distortion or energy shift can, to experimental accuracy, be indicated by the following relation,

$$\frac{p_2}{p_1} = \frac{(\gamma + 1)}{4} \frac{w^2\ ax}{c^2}$$

$$= (\gamma + 1)\ \pi^2\ \frac{a}{\lambda}\ \frac{x}{\lambda} \tag{18}$$

where $w = 2\pi f$

a, maximum amplitude at the source, $\dot{\xi} = a \cos wt$

x, distance along tube from generator

λ, wave length

γ, ratio of specific heats of air

c, velocity of sound

Thus it is seen that for plane waves the distortion varies directly as the source amplitude, distance from the source, and inversely as the square of the wave length.

In the present tests pressure-variation measurements were taken well in the "pressure field" (analog to induction field of an antenna) up to within a few inches from the tip of a propeller and no finite amplitudes were observed until within a chord distant from the plane of rotation. This result would be expected from a consideration of potential flow about airfoils. From this result and considering spherical divergence it may perhaps be said that no serious discrepancies due to finite amplitudes would arise until wave lengths of the order of the chord are considered.

The question of finite amplitudes where spherical waves are concerned has been well summed up by Lamb in reference 10, "In three dimensions the effect must be very much less, owing to the diminution of amplitude by spherical divergence."

Apparently the discrepancies between the calculated and observed sound pressures for harmonics above the first cannot be attributed, at least to any great extent, to considerations of finite amplitudes. It seems more likely that such discrepancies are due to the theory as presented in this paper lacking higher order considerations. It appears that the deviation of the theory from experimental values is a question of the wave lengths of the higher harmonics not being sufficiently large compared with the radius R.

The discrepancies will be considered as having been taken into account by a function described by

$$G_{qn} = B_{qn}\ m_2{}^x \tag{19}$$

where $m_2 = qn\ KV/C$, (the same as m_1 except that $\sin\beta$ is omitted). Equation (13) now becomes

$$p_{qn} = \frac{\rho_0\ qn\ a\ HR\ A_{qn}}{\sqrt{2}\ b\ l}\ K^2V^2\ J_{qn}(m_1)\ B_{qn}\ m_2{}^x \tag{20}$$

The problem now is to find the coefficient B_{qn} and the exponent x from experimental values of p_{qn} and the other known quantities in equation (20).

Data obtained from the two-blade arrangement will be used for determining B_{qn} and x. Since it is known that the theory holds for small values of $qnKV/C$, there is little choice in the number of blades to use in obtaining data for an empirical relation. For practical reasons the smallest number of blades to use is obviously two.

The main effect in producing these discrepancies seems to be in the magnitude of the quantity m_2, which is a direct measure of the ratio of the radius R to the wave length λ. Since

$$m_2 = qn\ KV/C$$

it is appreciated that it does not matter how higher values of m_2 are obtained, whether by increasing the number of blades n or considering higher harmonics q with fewer blades. Perhaps it is also well to add that the same range of KV/C would be used in any case, it being the main variable for any value of qn.

Quite obviously, the exponent x may be obtained first by plotting the logarithm of the sound pressure p_{qn} and all values varying with V in equation (20), obtained by derivation, against the logarithm of the quantity KV/C. The slopes of the graphs so obtained can then be plotted against qn, which will give the relation between x and qn. It will also appear that x depends on KV/C as well since the slope of $\log(J_{qn}\ m_1)$ against $\log(KV/C)$ decreases with increases of KV/C. As the calculated value of the sound pressure of the fundamental checked the experimental value fairly well, it would be anticipated

that, for the fundamental, G_{qn} would degenerate to 1 or, putting it in another way, B_{qn} and m_2^x each may become 1.

It may be of interest that the same sort of discrepancies were found between exponents given by theory and those obtained from experimental data for rotation noise from propellers operating under normal conditions of speed and thrust. Gutin's relation would, for example, give a difference in exponent of 2 for adjacent harmonics of a two-blade propeller and from experiment the difference of approximately 1 was found.

EVALUATION OF THE EMPIRICAL FUNCTION

The data from the analyzer records for various speeds off the two-blade arrangement ranging from about 1,000 to 2,000 r.p.m. with the microphone in the plane of the blades ($\beta = 90^\circ$) were plotted against KV/C. More specifically, the logarithm of the amplitudes h_{qn} of the analyzer records for the first five harmonics was plotted against the logarithm of KV/C. A proportionality exists between h_{qn} and p_{qn}. Only one of these graphs is shown in figure 7 to indicate the dispersion of points normally observed. The values of the slopes of these graphs, corrected for frequency-characteristic errors of the equipment used, were then plotted against qn (fig. 8), which gives the exponent x of V or $(qnKV/C)$ for the different harmonics.

In figure 8 is also plotted the exponent of V in (K^2V^2) and in $J_{qn}(m_1)$ with $\sin \beta = 1.0$, ($\beta = 90^\circ$) of equation (22). Since the exponent for $J_{qn}(m_1)$ varies with KV/C, it is plotted for $KV/C = 0$, $KV/C = 0.48$, and $KV/C = 0.80$ to indicate the usual range of variation. The value 0.48 was chosen as the intermediate value of KV/C because the mean of logarithm KV/C in the speed range used was about 0.68-1, or a value of KV/C of approximately 0.48.

The difference then between the exponent x for the sound pressures as measured in experiment and the x for K^2V^2 plus x for $J_{qn}(m_1)$ gives the x_f for the function G_{qn}. The exponent for this function, taking (2, 4)

as the origin on figure 8, would be approximately

$$x_f = -\ 0.28\ (qn - 2) \tag{21}$$

For KV/C near 0.48 this function can be given as

$$G_{qn} = B_{qn}\ m_2^{-0.28\ (qn-2)} \tag{22}$$

In general, as indicated in figure 8, the graph of the exponent of $J_{qn}(m_1)$ for the measured sound pressures would vary with KV/C. For values of KV/C less than 0.48 the graph would be steeper, and would be less steep for values greater than 0.48. Since for KV/C near zero the ratio of the wave lengths to the radius R of the blade would be large, the theory would hold without the experimentally determined function and the exponent of which would be zero for all harmonics. If then, as a first approximation, it is assumed that the exponent of this function varies directly as KV/C,

$$G_{qn} = B_{qn}\ m_2^{\frac{-0.28}{0.48}\ (qn-2)(K\frac{V}{C})}$$

$$= B_{qn}\ m_2^{-0.58\ (qn-2)(K\frac{V}{C})} \tag{23}$$

Equation (22) may now be written

$$p_{qn} = \frac{\rho_o\ qn\ a\ HR\ A_{qn}}{\sqrt{2}\ b\ l}\ K^2V^2\ J_{qn}(m_1)\ B_{qn}\ m_2^{-0.58(qn-2)(K\frac{V}{C})} \tag{24}$$

The coefficient B_{qn} can now be found by substituting values of the harmonic sound pressures p_{qn} that are obtained from experiment, all other values being known. The values of this coefficient for the first five harmonics were calculated and are given for the two blades used.

$$B_2 = 1.1$$

$$B_4 = 1.3$$

$$B_6 = 2.7$$

$$B_8 = 11.5$$

$$B_{10} = 40$$

These values are shown plotted against qn in figure 9 from which B_3, B_9, and even B_{12} (by extrapolation) could be obtained for a three-blade arrangement.* Obviously, values of B_{qn} for other arrangements are available from figure 9, up to a value of qn equal to about 12.

POLAR DISTRIBUTION OF SOUND PRESSURE

The sound pressures of the first four harmonics for the two-blade arrangement are plotted in polar coordinates, which show the distribution about the disk or equivalent ring of the blades. The axis of rotation is taken as the reference axis with the front of the driving motor taken as the zero direction. These polars are plotted in figure 10 with the continuous lines representing the experimental values and the dashed lines the calculated distribution. All data on these polar graphs are for a constant speed of 1,780 r.p.m. The calculated values of sound pressure for each harmonic were multiplied by a common factor of nearly 1 to make the calculated distribution coincide with the experimental distribution in the plane of rotation ($\beta = 90^\circ$). This method was desired for the purpose of comparison of the shapes of the distribution curves. It will be noticed that the observed polar curves for the fundamental and second harmonics have their axes of symmetry slightly ahead of the 90° position. This location is probably due to a slight thrust on the blades that is exerted toward the rear or 180° direction owing to a slight unavoidable twist of the blades. For propellers exerting a thrust forward, a pronounced peak in the sound pressure is usually observed toward the rear near 120° for the first two harmonics, which perhaps is the explanation for the slight dissymmetry with respect to the plane of rotation. The reason why the experimental values are not zero on the axis is most probably due to the propeller not operating in free space and not being free of obstructions, as assumed in the theory.

---

*The curve of figure 9 may perhaps give a wrong impression of the discrepancy in the theory for the higher harmonics. It must be remembered that the coefficient B_{qn} must be multiplied by $n_2^{-0.56(qn-3)K\frac{V}{C}}$, which gives values less than 1.

COMPARISON BETWEEN MEASURED AND CALCULATED SOUND PRESSURE FOR A FOUR-BLADE ARRANGEMENT

In order to obtain an indication of the value of equation (24) for cases other than for two blades, a four-blade arrangement was made and sound-pressure measurements made therefrom. The blades of this arrangement were equally spaced, of the same length, and the blade section was equal in all respects in the outer two-thirds of the radius to that of the two-blade arrangement. The only difference in section was near the hub where the sound generation is negligible.

In figure 11 is plotted the measured intensity for the fundamental of the four-blade arrangement against log KV/C. The range is limited owing to flutter at the higher speeds but sufficient data were taken to give a fairly representative mean line. Also, by the use of equation (24) there were obtained three calculated points that are within 1.5 db of this mean line. This deviation is reasonably small. It will be noticed that the dashed line through the calculated points in figure 11 curves downward toward the left-hand side and the experimental mean line is drawn as a straight line. If the experimental mean had been correctly drawn, it would probably have been similarly curved. This contention is supported by the fact that many points fell below the line at the lower values of log KV/C. When the points were plotted, it was thought that these amplitudes taken from the analyzer records were too small and therefore too unreliable to be given much weight. At the time, all that could be expected, or perhaps even hoped for, was that a line could be drawn whose slope would give the correct value of the exponent at the mid-point of the range of log KV/C used. Another consideration of interest, at $KV/C = 0$, equations (13) and (24), would be identical and the slope or exponent of V would increase to $(2 + qn)$.

As a matter of further check on equation (24) for the four-blade arrangement at $KV/C = 0.451$, $l = 80$ feet, and $\beta = 90^\circ$, a second harmonic sound pressure of 0.11 bar, or 54.9 db, was experimentally obtained. Calculation gives 0.114 bar or 55.1 db. This deviation of only 0.2 db is so small that it may perhaps be accidental but at any rate it indicates that equation (24) has good possibilities of being quite general. It is also of interest to note that

the experimental curve in figure 11 gives a slope of 5.1 (changing db back to log p_{qn}) and equation (24) indicates a slope at log (KV/C) = $\bar{1}$.584, or KV/C = 0.384 (mean of the range of log (KV/C) in fig. 11) of (5.7-0.45) or 5.25.

In closing it may be well to state that, by the very nature of the function G_{qn}, only one value of m_2 is correct, namely, qnKV/C. Therefore, in view of the check on equation (24) by data obtained from the four-blade arrangement, qnKV/C must be the correct value, or at least nearly so, for the function selected.

CONCLUSIONS

1. The theory gives the sound pressure without empiricism for the fundamental and fairly satisfactory results for the second harmonic for a two-blade arrangement with zero thrust, and KV/C less than about 0.7.

2. The empirical relation given takes care of cases for values of qnKV/C up to about 7 and perhaps even higher values provided that KV/C does not exceed about 0.7.

3. The effect of thickness of blade sections of a propeller in producing noise is negligible except for very low angles of attack, that is, the rotation noise of a propeller absorbing normal power gives sound pressures much larger than found in these tests where only thickness was involved. At least, this conclusion is true as regards the calculation of loudness.

4. The relation (24) gives the shape of the polar distribution of rotation noise for the first four harmonics fairly well in the speed range used.

Langley Memorial Aeronautical Laboratory,
National Advisory Committee for Aeronautics,
Langley Field, Va., June 14, 1937.

REFERENCES

1. Gutin, L.: Über das Schallfeld einer Rotierenden Luftschraube. Physikalische Zeitschrift der Sowjetunion, vol. 9, no. 1, 1936, pp. 57-71.

2. Hart, Morris D.: The Aeroplane as a Source of Sound. R. & M. No. 1310, British A.R.C., 1930.

3. Stowell, E. Z., and Deming, A. F.: Noise from Two-Blade Propellers. T.R. No. 526, N.A.C.A., 1935.

4. Ernsthausen, W.: Zur Entstehung des Luftschraubengerausches. Luftfahrtforschung, Band 13, Nr. 12, 20 Dez. 1936, S. 433-440.

5. Fletcher, Harvey: Speech and Hearing. D. Van Nostrand Co., Inc., 1929.

6. Stowell, E. Z., and Deming, A. F.: Vortex Noise from Rotating Cylindrical Rods. T.N. No. 519, N.A.C.A., 1935.

7. Rayleigh, Lord: The Theory of Sound. Vol. II. Macmillan & Co., Ltd. (London) 1878 (reprint of 1929).

8. Theodorsen, Theodore: A New Principle of Sound Frequency Analysis. T.R. No. 395, N.A.C.A., 1931.

9. Thuras, A. L., Jenkins, R. T., and O'Neil, H. T.: Extraneous Frequencies Generated in Air Carrying Intense Sound Waves. Acous. Soc. Amer. Jour., vol. VI, no. 3, Jan. 1935, pp. 173-180.

10. Lamb, Horace: The Dynamical Theory of Sound. Second Edition. Edward Arnold & Co. (London), 1931, pp. 185-186.

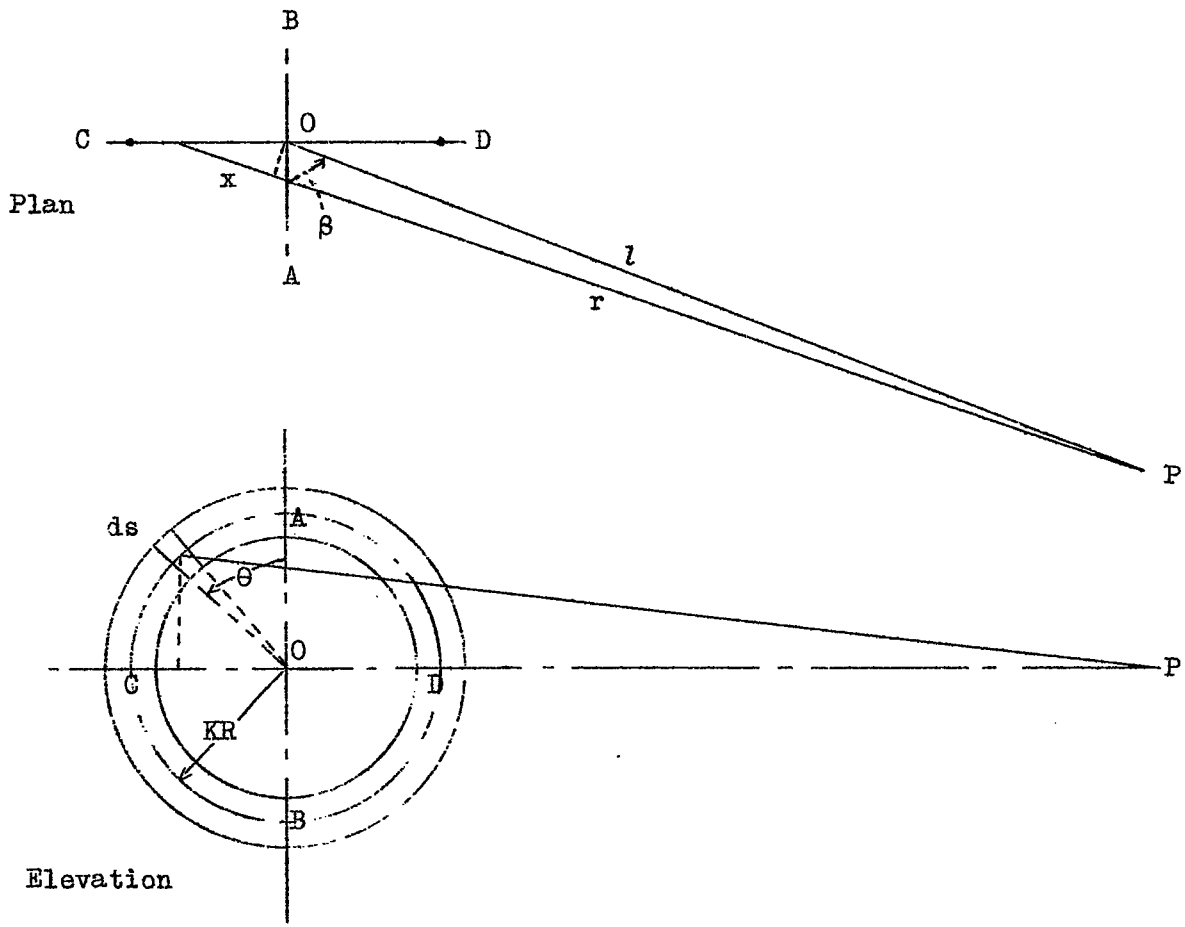

Figure 1.- Elevation and plan view of geometry of sound source and point of observation.

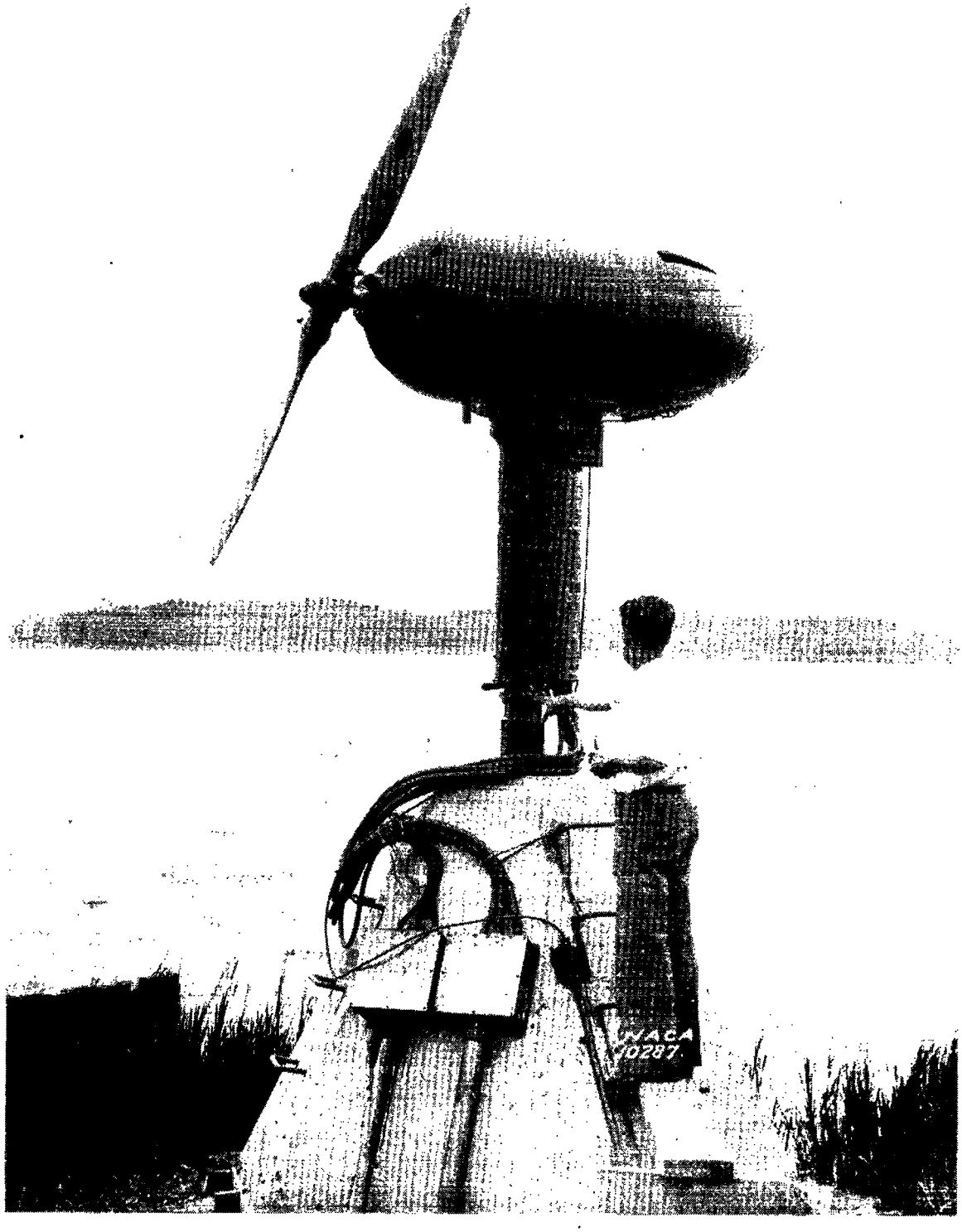

Figure 2.- Motor with propeller mounted.

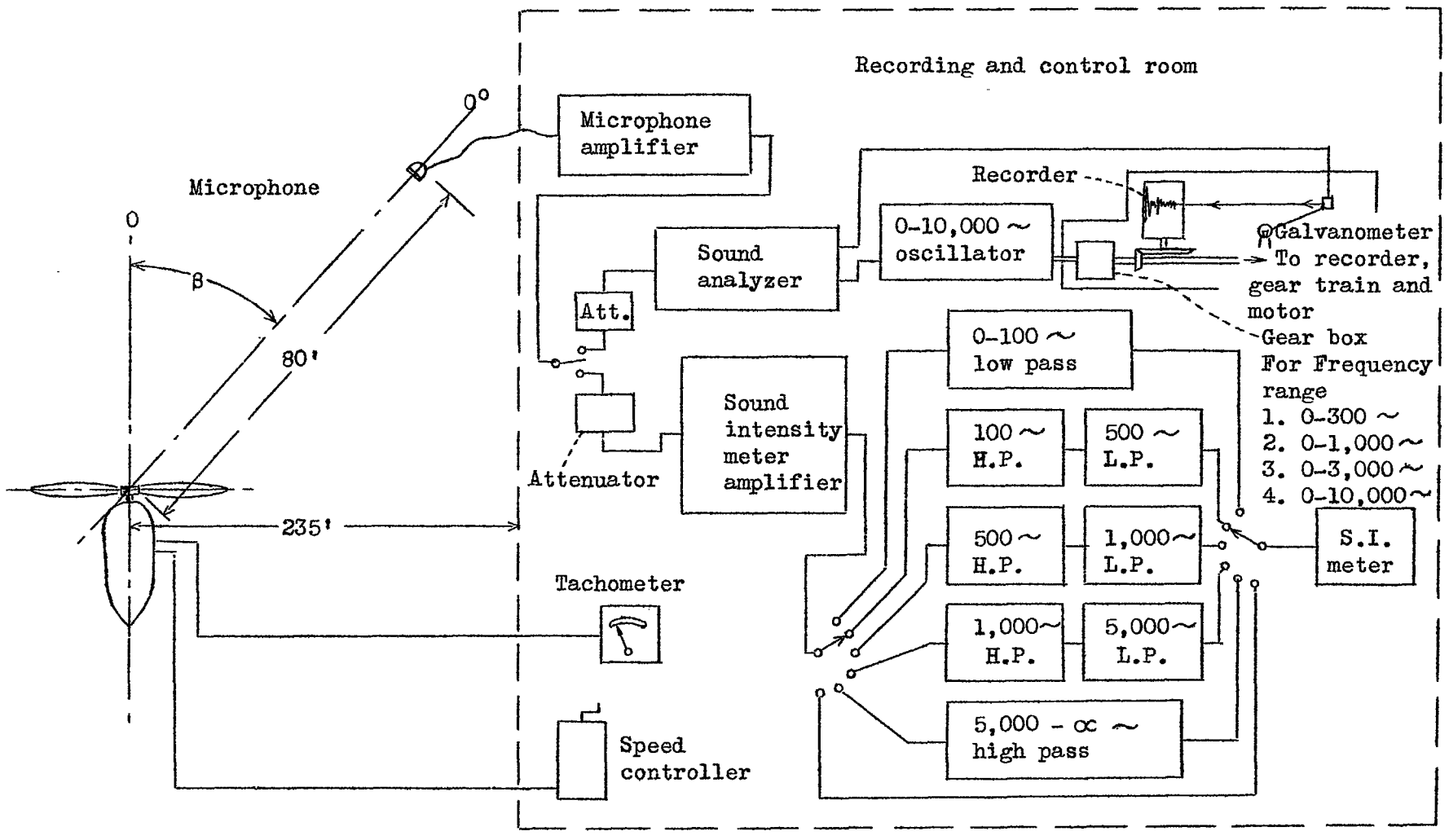

Figure 3.- Schematic sketch of sound-measuring equipment.

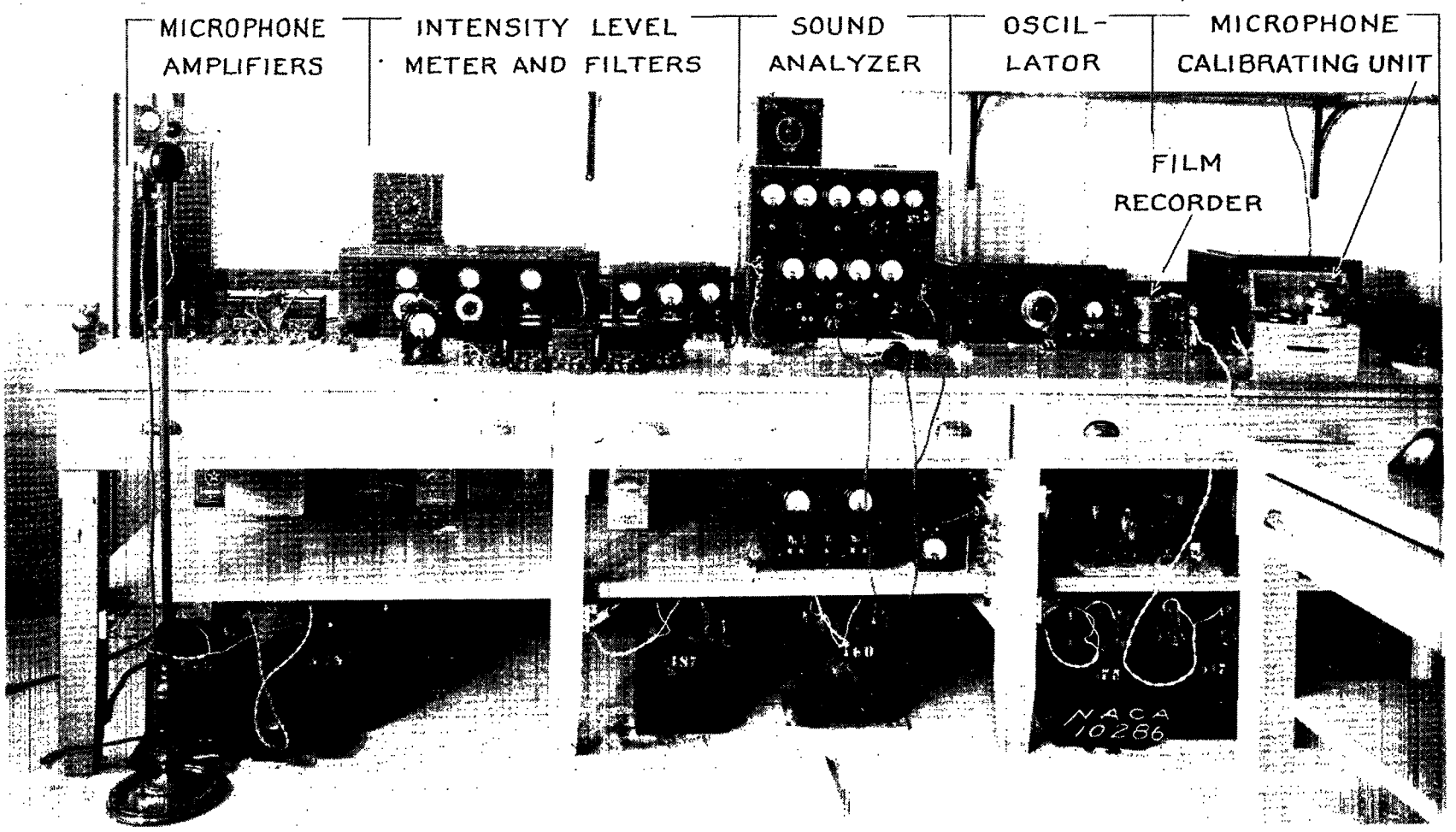

Figure 4.- Sound-measuring equipment

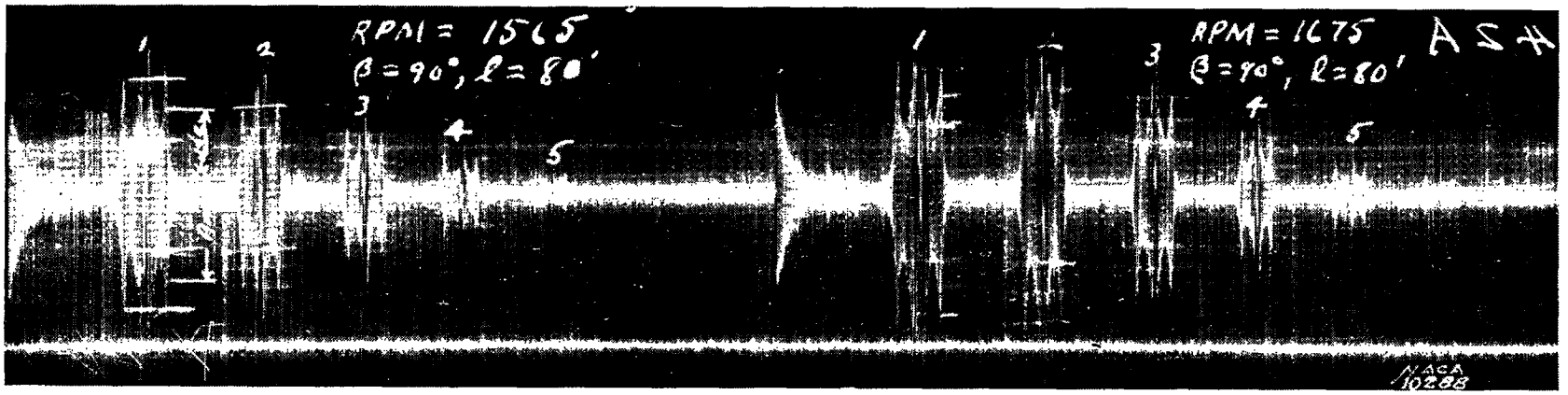

Figure 5.- Analyzer record

Dimensions of sections(in.)

Sec. A-A		Sec. B-B		Sec. C-C	
x	y	x	y	x	y
0.62	0.48	0.44	0.34	0.25	0.19
1.25	.59	.88	.41	.50	.24
2.08	.625	1.46	.44	.83	.25
2.50	.625	1.75	.44	1.00	.25
3.75	.56	2.62	.39	1.50	.22
5.00	.36	3.50	.25	2.00	.14
6.25	0	4.37	0	2.50	0

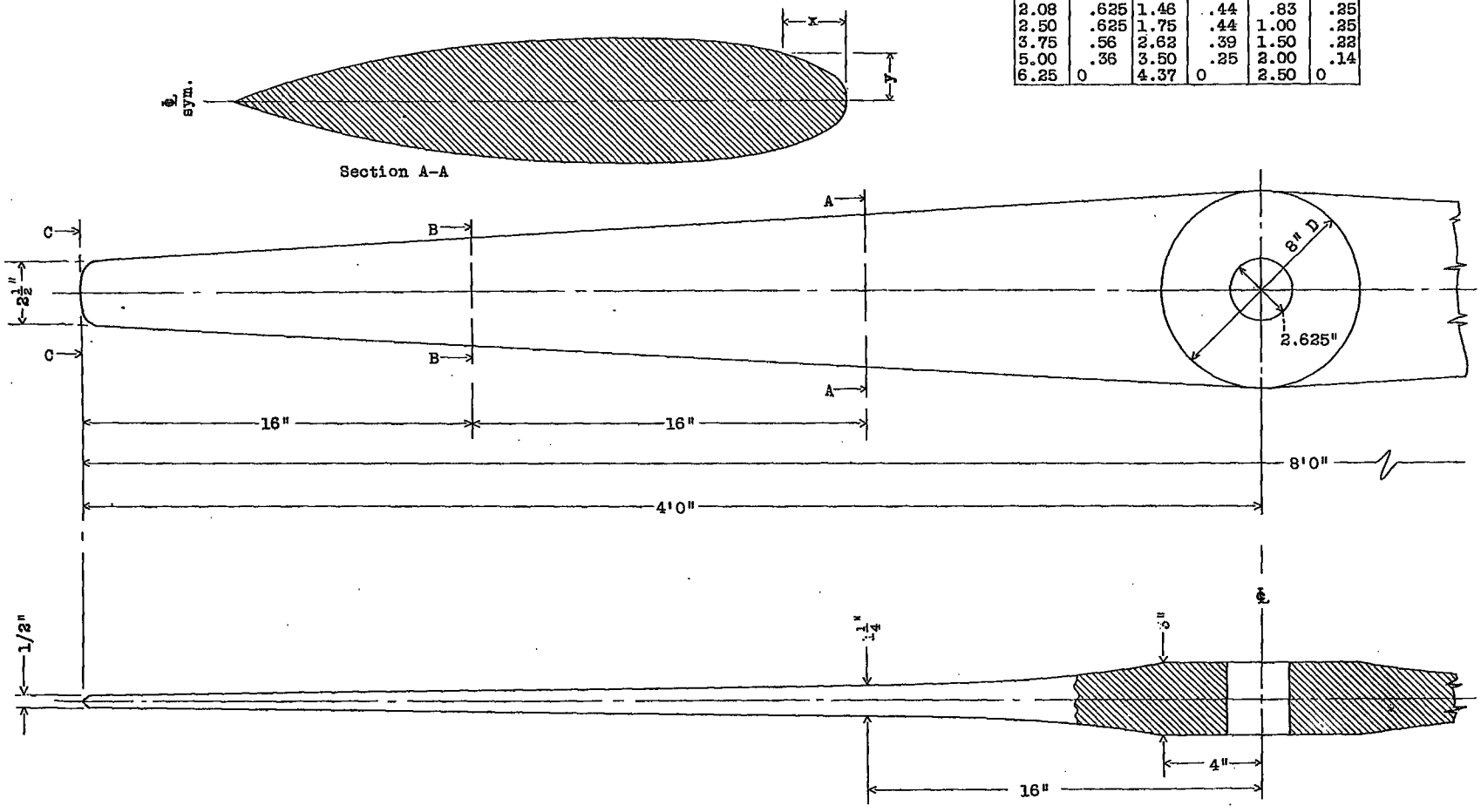

Symmetrical section; material, spruce; blade angle, zero.

Figure 6.- Blades used in sound tests.

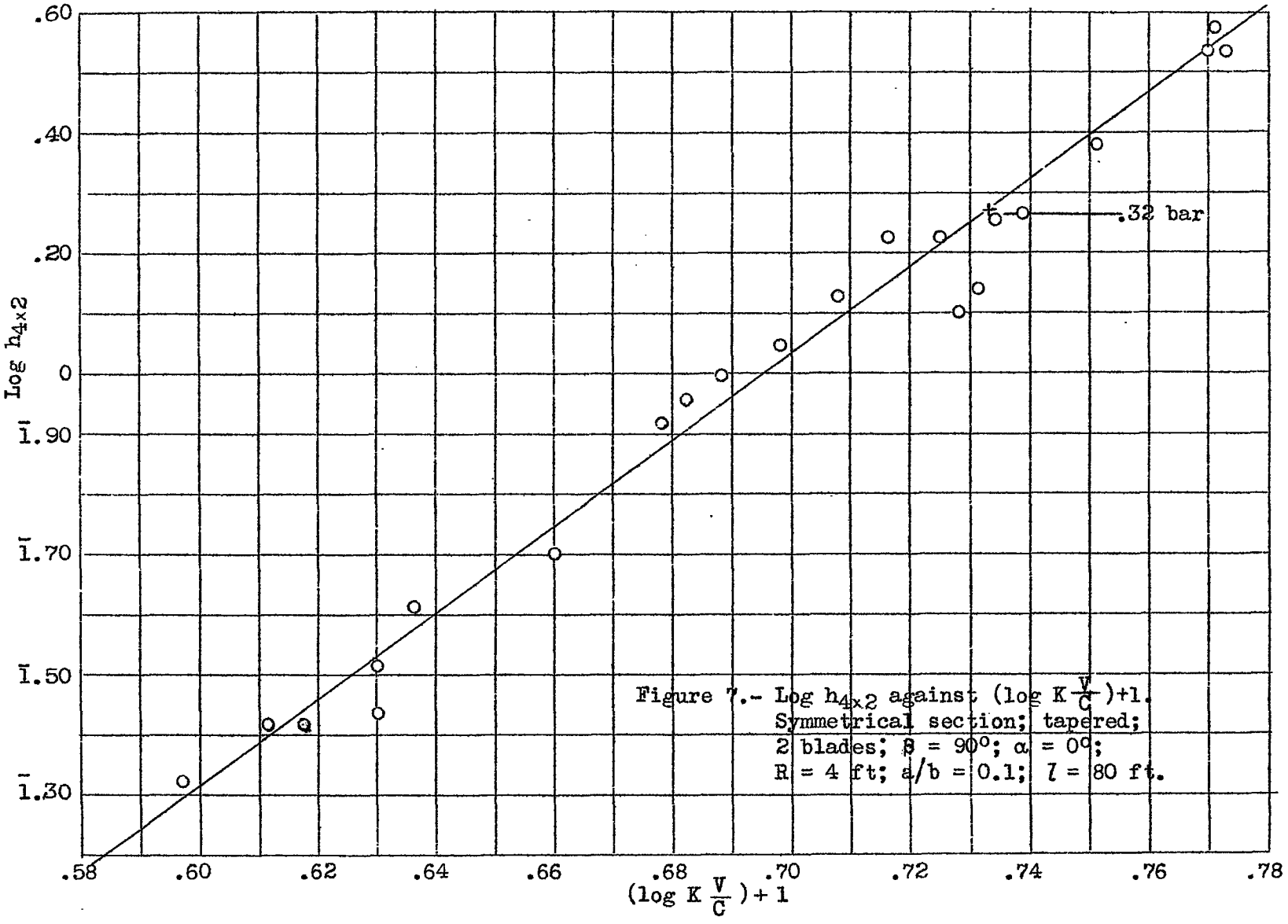

Figure 7.- Log $h_{4\times2}$ against $(\log K \frac{V}{C})+1$.
Symmetrical section; tapered;
2 blades; $\beta = 90^{\circ}$; $\alpha = 0^{\circ}$;
$R = 4$ ft; $a/b = 0.1$; $l = 80$ ft.

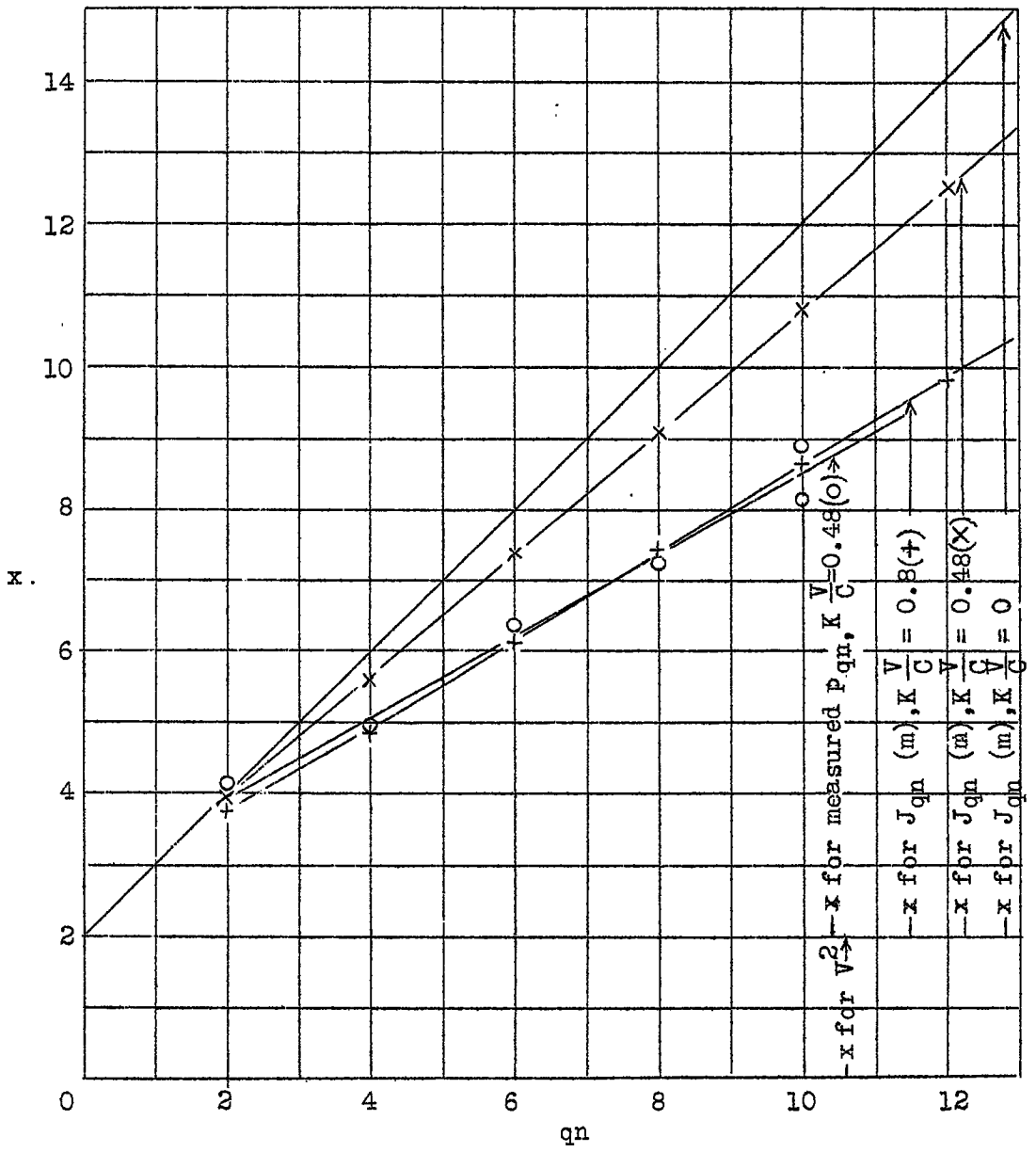

Figure 8.- Exponent x, against qn.

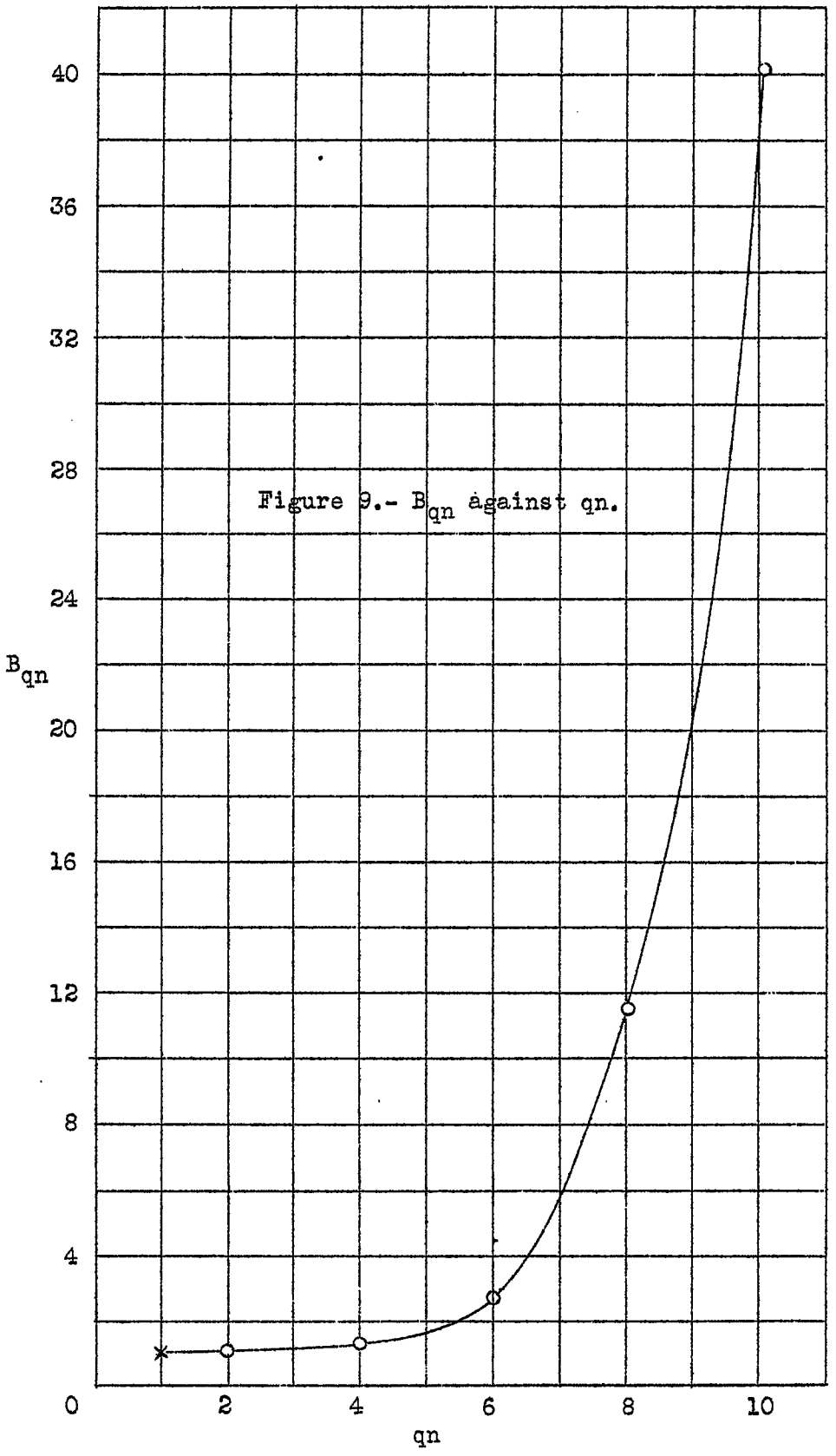

Figure 9.- B_{qn} against qn.

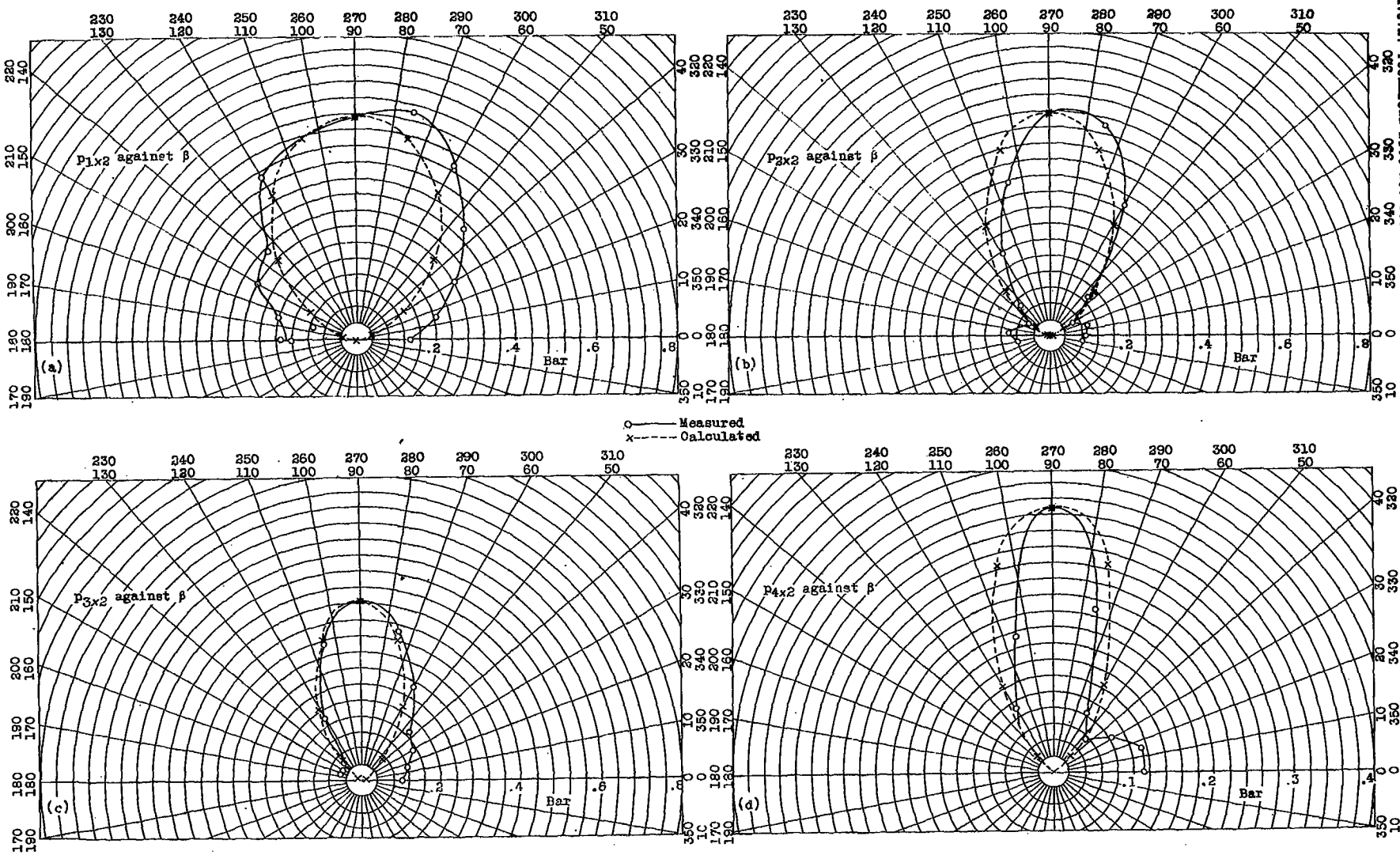

Figure 10a,b,c,d.- Polar plots of first four harmonics. Symmetrical section; two blades; revolution speed, 1,780 r.p.m.; l,80 ft.

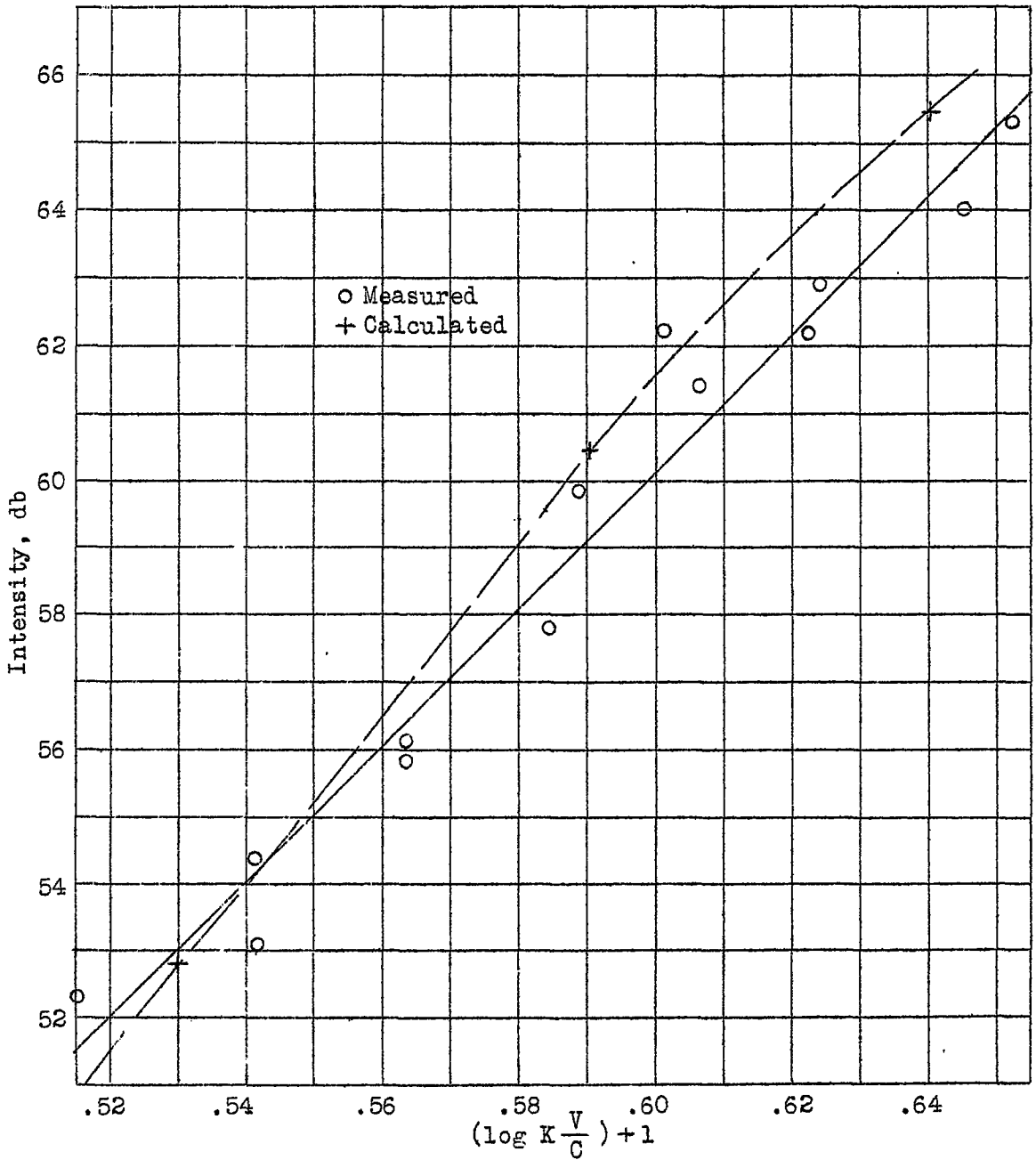

Figure 11.- Intensity of the fundamental against $(\log K\frac{V}{C})+1$ for a four-blade symmetrical section. R = 4 ft.; a/b = 0.1; b = 5 in.; l = 80 ft.; $\beta = 90^{\circ}$; 1 bar = 74 db. db = $74 + 20 \log p_{qn}$